JUL.2005

CNC TURRET PUNCH PRESS

EMK-3610NT(EU_EXP)

AMNC-F(FANUC180i-PB)

PARTS LIST

12565

Ver. 1.1

GENERAL INFORMATION

* Specifications subject to change without notice.

* This parts list shows all of the parts used in your machine.
  Please file this parts list for reference and refer to it when you order parts or maintain the machine.

* This edition has been divided into sections.
  Please refer to MACHINE COMPONENT.

* The scale used on each page of drawings is different.
  Please be aware that parts may seem to be different sizes on different pages.

INTRODUCTION

1. TABLE OF CONTENTS

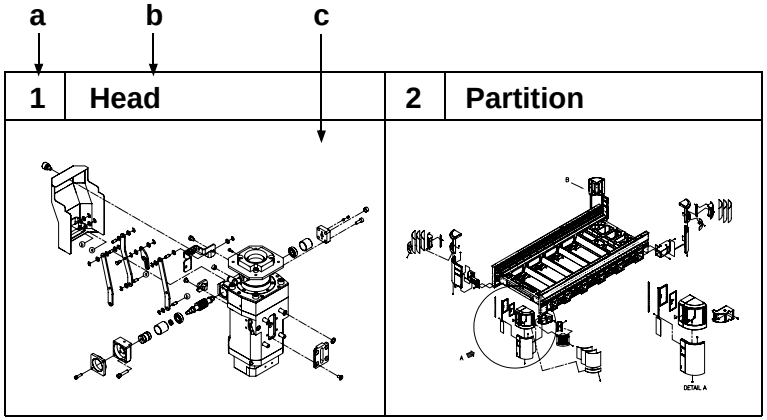

a Unit No.
b Unit Name
c Assembly drawings shown in the main text.

2. MAIN TEXT

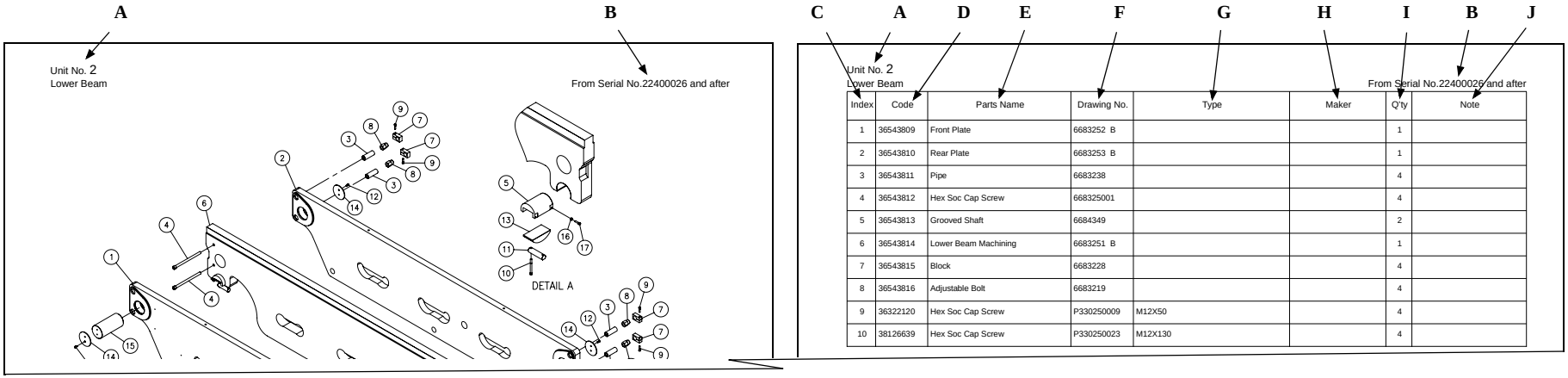

Index	Code	Parts Name	Drawing No.	Type	Maker	Q'ty	Note
1	36543809	Front Plate	6683252 B			1	
2	36543810	Rear Plate	6683253 B			1	
3	36543811	Pipe	6683238			4	
4	36543812	Hex Soc Cap Screw	668325001			4	
5	36543813	Grooved Shaft	6684349			2	
6	36543814	Lower Beam Machining	6683251 B			1	
7	36543815	Block	6683228			4	
8	36543816	Adjustable Bolt	6683219			4	
9	36322120	Hex Soc Cap Screw	P330250009	M12X50		4	
10	38126639	Hex Soc Cap Screw	P330250023	M12X130		4	

A Unit No. and Name
The Unit No. and Name are shown on relevant pages.

B Machine Serial No.
The Serial Nos. of machines corresponding to the information shown.

C Index No.
The index No. for each part in a drawing is shown and corresponds to the list of parts for that drawing.

D Code
The individual Code No. for each part on the models is shown.
Nos. in parentheses represent interchangeable with other machines.

E Parts Name
The name (description) of each part.

F Drawing No.
The numbers of drawings relevant to the part are given.

G Type
The type description of each marketed item are shown.

H Maker
The manufacturer of each marketed item is shown.

I Quantity
The quantity of each part used on the models is shown.

J Notes
Cautions and notes necessary to the ordering each part.

ORDER INSTRUCTIONS

1. Confirm whether the model name and No. on the serial plate of the machine correspond to the numbers of the machines for which the parts list is effective.

2. Use the drawings in the Table of Contents to find the unit on which the part in question is shown in greater detail.

3. Spread out the referred pages.

4. Use the drawings and corresponding lists to confirm the specs,etc. of the part in question.

5. When ordering,please supply the following information:
   (1)Machine Model
   (2)Serial No.
   (3)Parts No.
   (4)Quantity

UNIT LIST

Frame
Drive
T-Axis
Slide
Y-Axis
Brush Table
Pneumatic Clamp
Repositioning
Piping
Lubrication
Electric
Standard Accessory
Control Device
AI
Turret B
Turret B-PV
Turret B-P&F
Turret B-P&F+PV
Assembling Adjustment
Support Cylinder
Balancer
Punch Assembling Jig
Air Blower V•EX
Work Jamming Sensor
Floating Brush
Floating Brush (Multi Tapping)
Multi Tapping
Memory Up
Power Vacuum
P&F
Jig (S)
Jig (L)
Loading Pneumatic Clamp
Hydraulic Clamp
Loading Hydraulic Clamp
Pass Line (AY Plate)
Pass Line (J Anchor)
MP-C
RMP-C
OL-C
US Line (CR)-C

© 2005 AMADA Co.,LTD.
All rights reserved. Printed in Japan.

MACHINE COMPONENT (1)

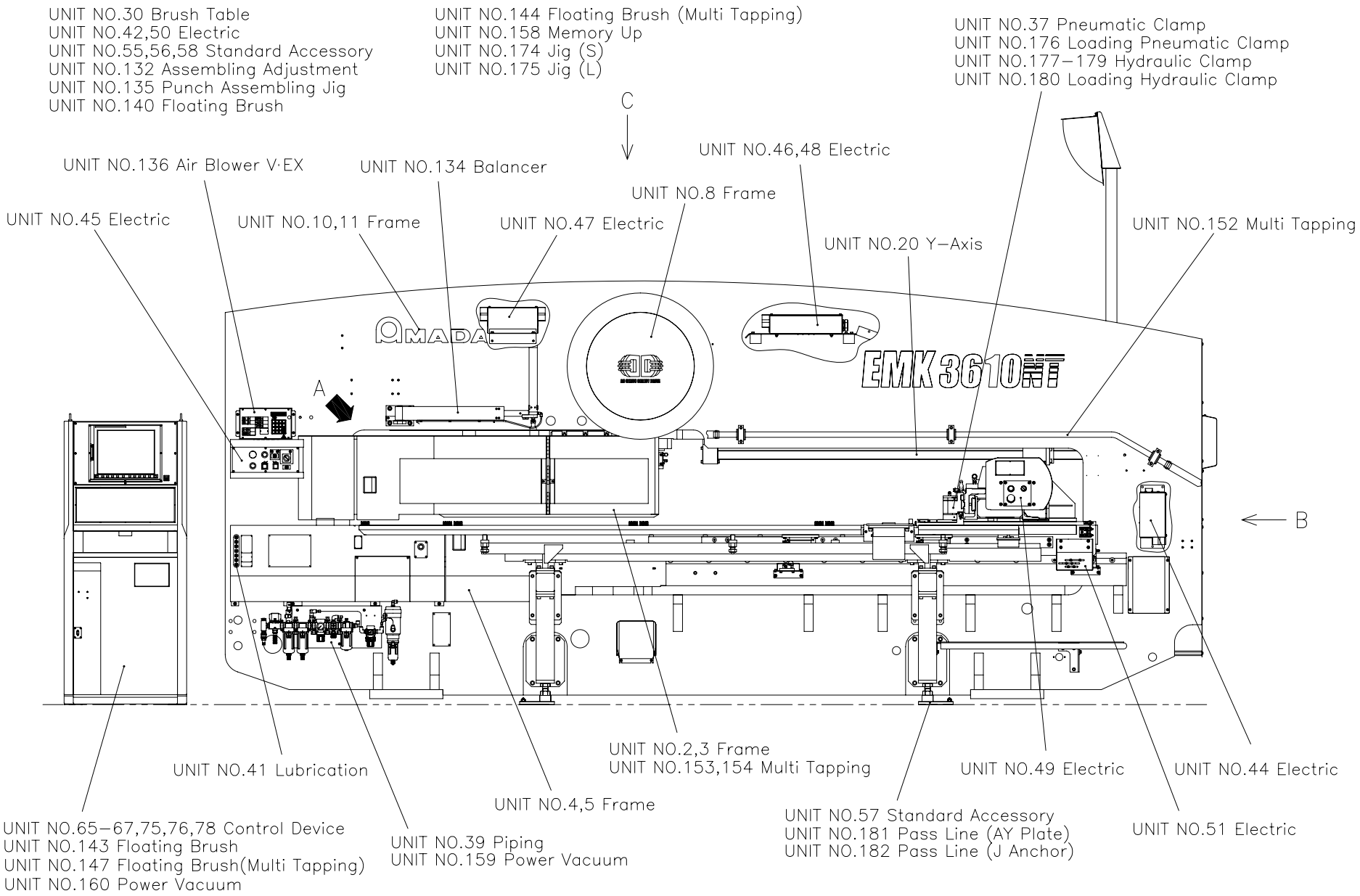

MACHINE COMPONENT (2)

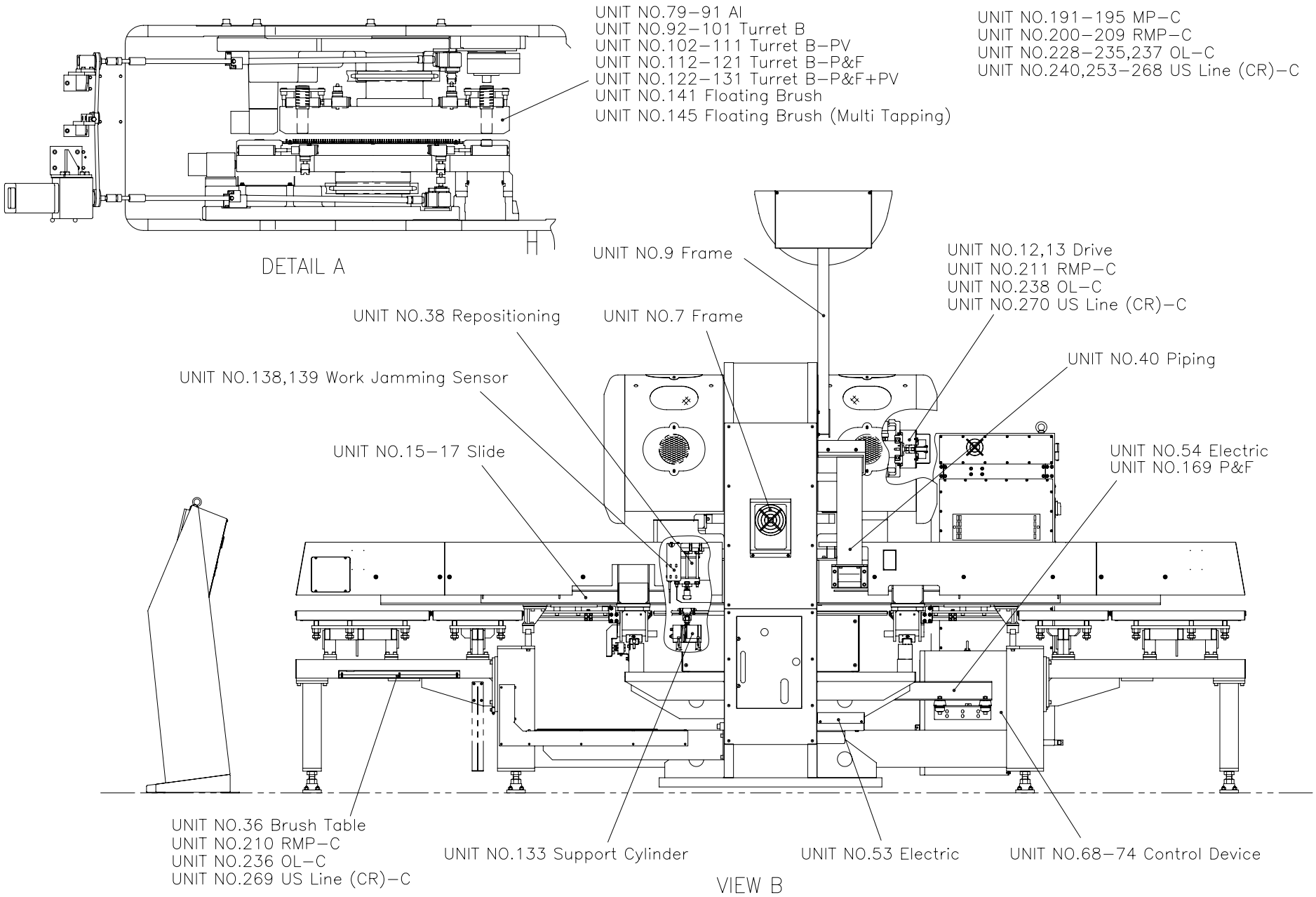

MACHINE COMPONENT (3)

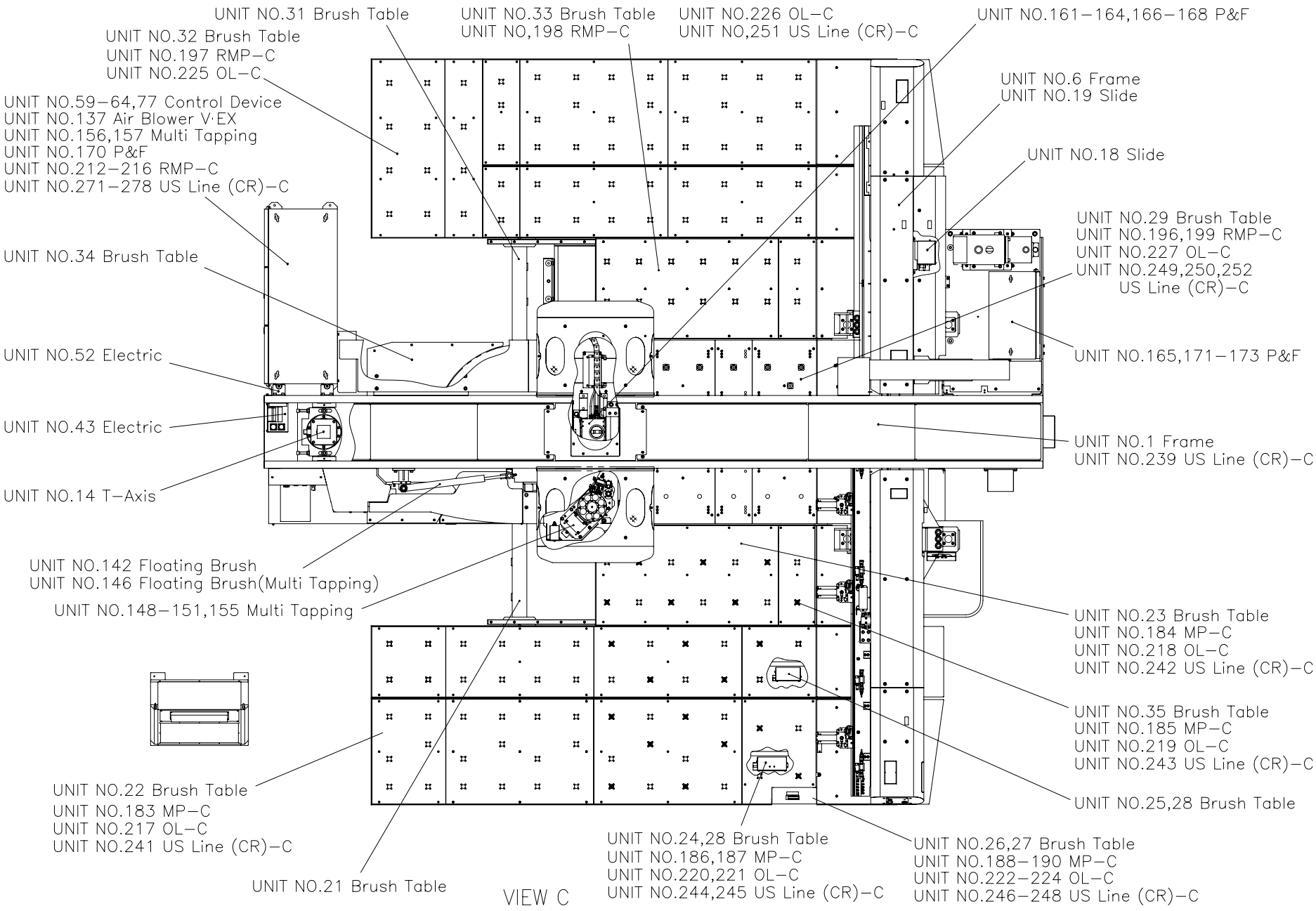

CONTENTS (1)

1	Frame(1)-1/4	1	Frame(1)-2/4	1	Frame(1)-3/4	1	Frame(1)-4/4
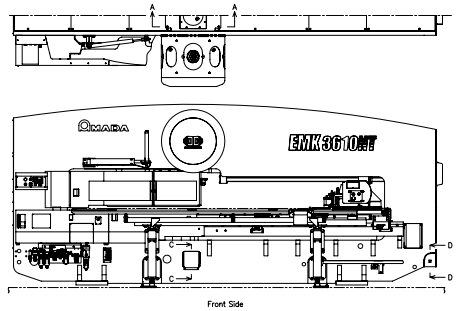		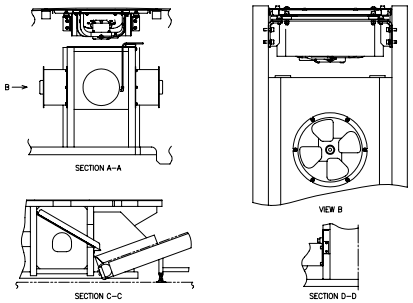		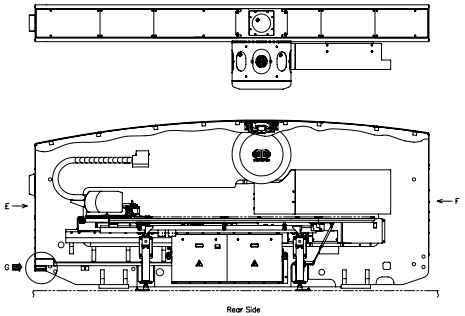		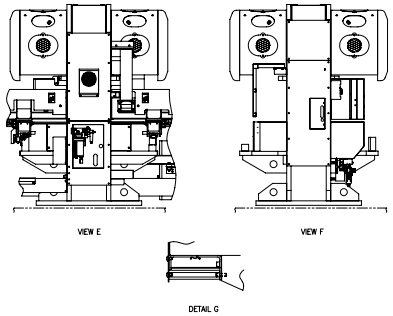	
2	Frame(2)-1/3	2	Frame(2)-2/3	2	Frame(2)-3/3	3	Frame(3)-1/2
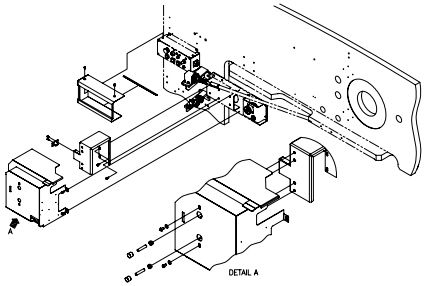		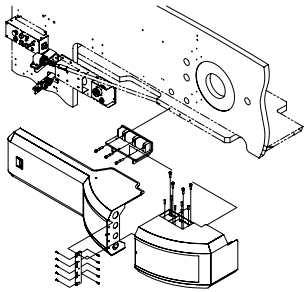		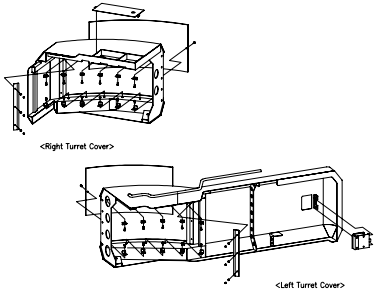		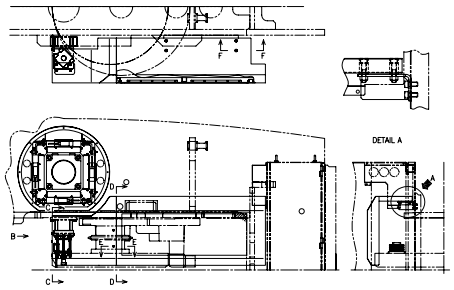	
3	Frame(3)-2/2	4	Frame(4)-1/3	4	Frame(4)-2/3	4	Frame(4)-3/3
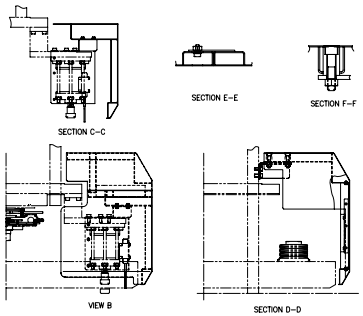		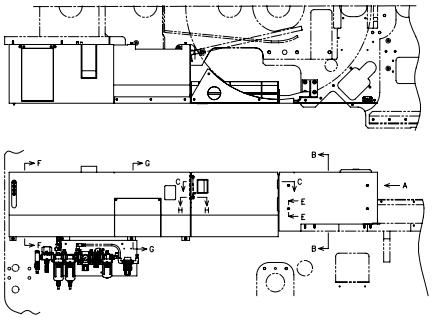		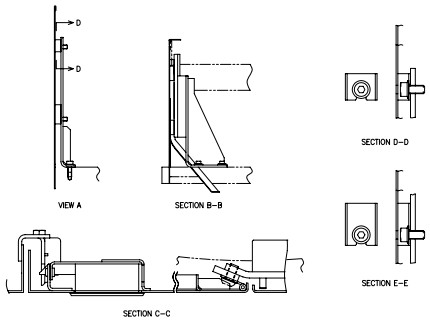		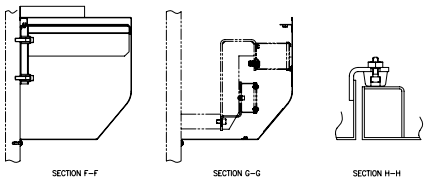	

CONTENTS (2)

5	Frame(5)-1/2	5	Frame(5)-2/2	6	Frame(6)-1/2	6	Frame(6)-2/2
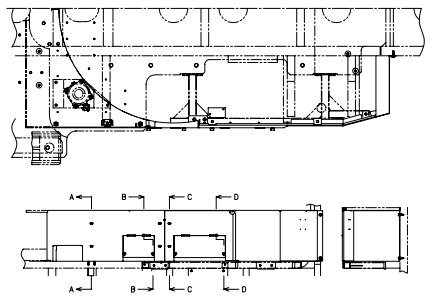		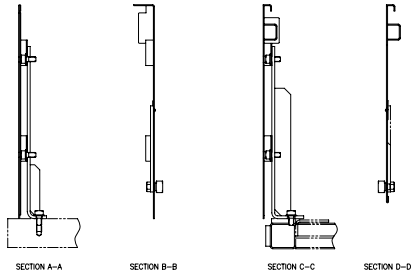		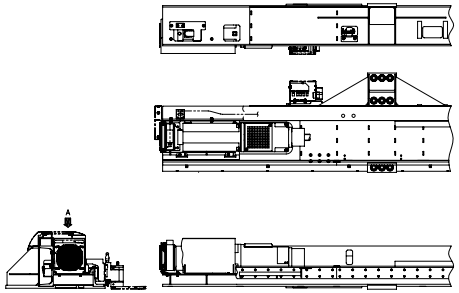		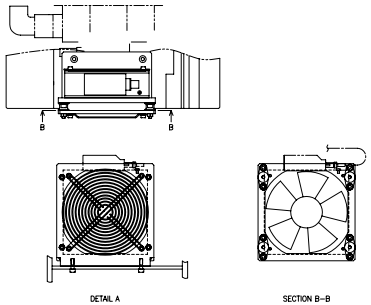	

7	Frame(7)	8	Frame(8)-1/5	8	Frame(8)-2/5	8	Frame(8)-3/5
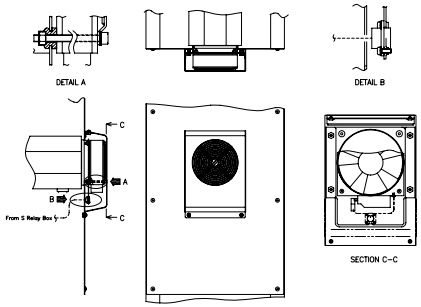		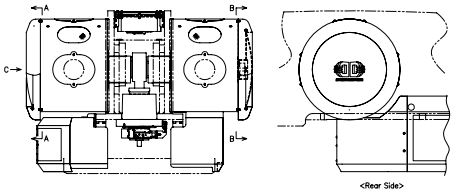		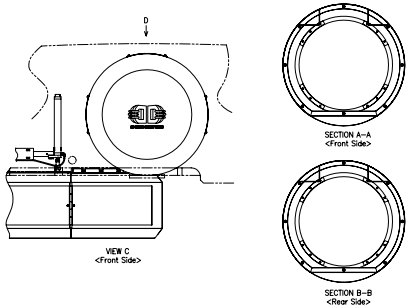		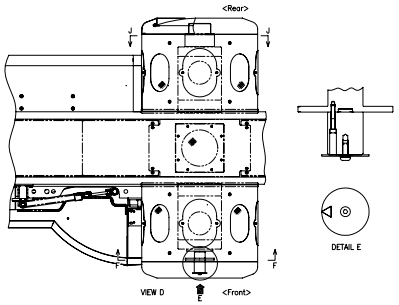	

8	Frame(8)-4/5	8	Frame(8)-5/5	9	Frame(9)	10	Frame(10)
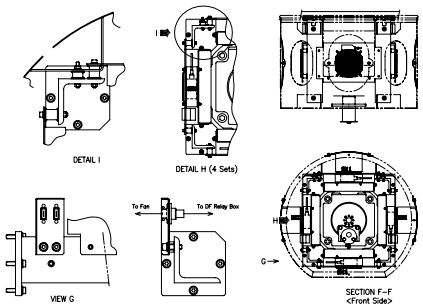		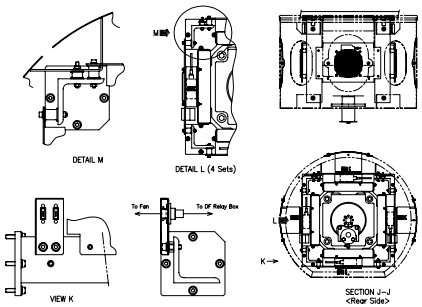		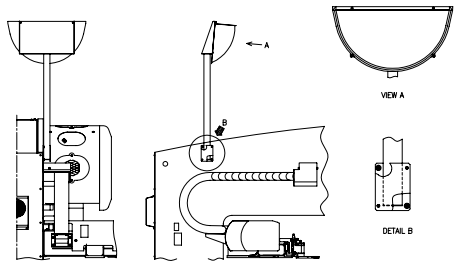		<List Only>	

6880020	Name Plate Setting (English)
6825046	Serial Plate Ass'y (English)
6880022	Name Plate Ass'y (English)
6877427	Lubrication Plate (without P&F) (English)
6877702	Lubrication Plate (P&F) (English)
6824345	Lubrication Plate (4Al) (English)
6882351	Lubrication Plate (2Al) (English)
6824453	Lubrication Plate (C/R) (English)
6817913	Name Plate Setting (Chinese)
6825047	Serial Plate Ass'y (Chinese)
6880025A	Name Plate Ass'y (Chinese)
6817770	Lubrication Plate (without P&F) (Chinese)
6817775	Lubrication Plate (P&F) (Chinese)
6817914	Lubrication Plate (4Al) (Chinese)
6882354	Lubrication Plate (2Al) (Chinese)
6817778	Lubrication Plate (C/R) (Chinese)

CONTENTS (3)

11 Frame(11)-1/2

<List Only>

6880050	Name Plate Setting
6825046	Serial Plate Ass'y
6880052	Name Plate Ass'y (English)
6877427	Lubrication Plate (without P&F) (English)
6877702	Lubrication Plate (P&F) (English)
6824345	Lubrication Plate (4Ai) (English)
6882351	Lubrication Plate (2Ai) (English)
6824453	Lubrication Plate (C/R) (English)
6877693	Name Plate Ass'y (CE)
6877694	Name Plate Ass'y (Number Plate)
6880053	Name Plate Ass'y (French)
6877429	Lubrication Plate (without P&F) (French)
6877703	Lubrication Plate (P&F) (French)
6824346	Lubrication Plate (4Ai) (French)
6882352	Lubrication Plate (2Ai) (French)
6824454	Lubrication Plate (C/R) (French)

11 Frame(11)-2/2

<List Only>

6880051	Name Plate Ass'y (German)
6877425	Lubrication Plate (without P&F) (German)
6877701	Lubrication Plate (P&F) (German)
6824344	Lubrication Plate (4Ai) (German)
6882350	Lubrication Plate (2Ai) (German)
6824452	Lubrication Plate (C/R) (German)
6880054	Name Plate Ass'y (Italian)
6877431	Lubrication Plate (without P&F) (Italian)
6877704	Lubrication Plate (P&F) (Italian)
6824347	Lubrication Plate (4Ai) (Italian)
6882353	Lubrication Plate (2Ai) (Italian)
6824455	Lubrication Plate (C/R) (Italian)

12 Drive(1)-1/4

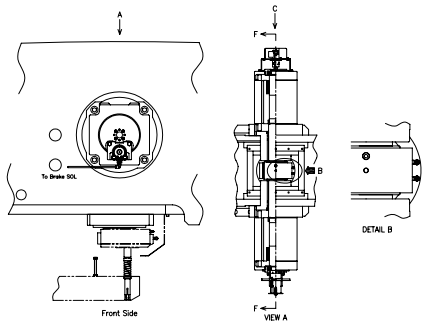

12 Drive(1)-2/4

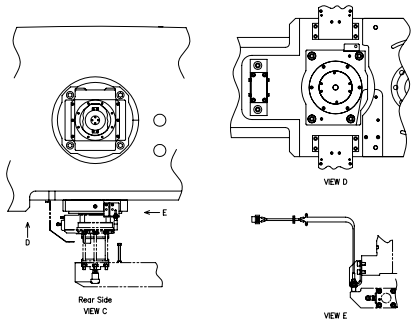

12 Drive(1)-3/4

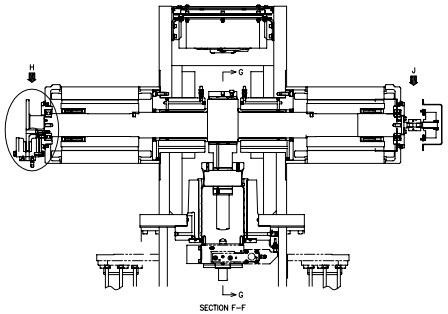

12 Drive(1)-4/4

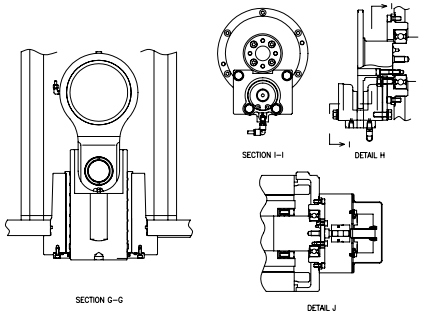

13 Drive(2)-1/3

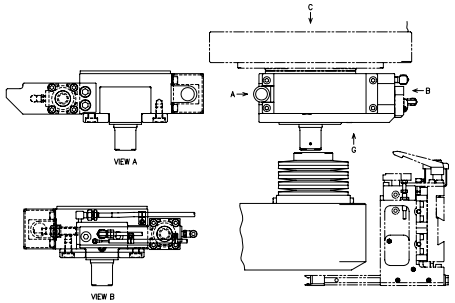

13 Drive(2)-2/3

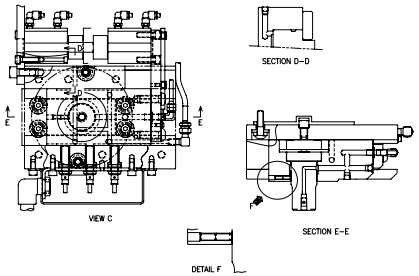

13 Drive(2)-3/3

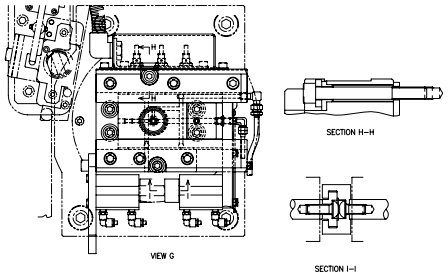

14 T-Axis-1/3

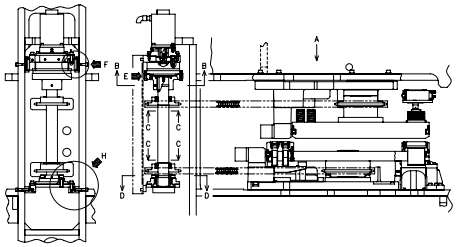

14 T-Axis-2/3

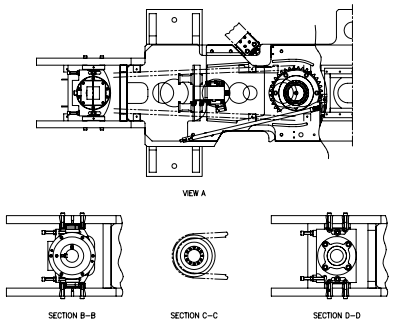

14 T-Axis-3/3

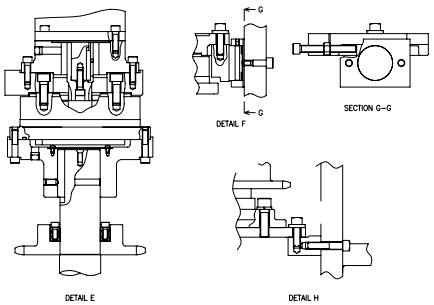

CONTENTS (4)

15	Slide(1)-1/3	15	Slide(1)-2/3	15	Slide(1)-3/3	16	Slide(2)
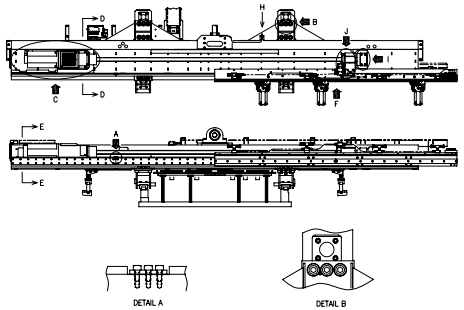		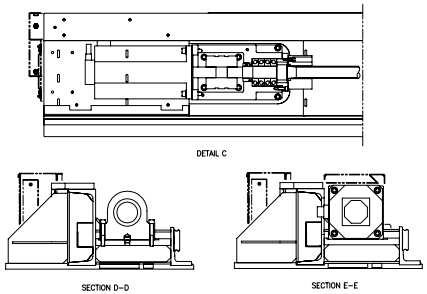		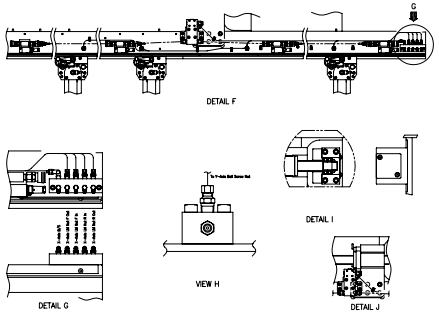		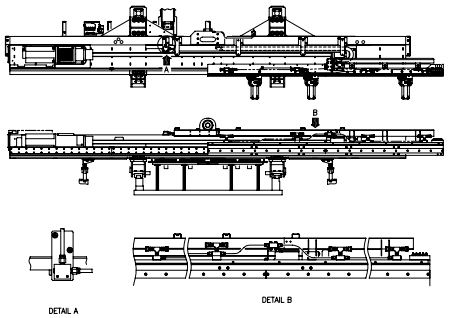	
17	Slide(3)-1/4	17	Slide(3)-2/4	17	Slide(3)-3/4	17	Slide(3)-4/4
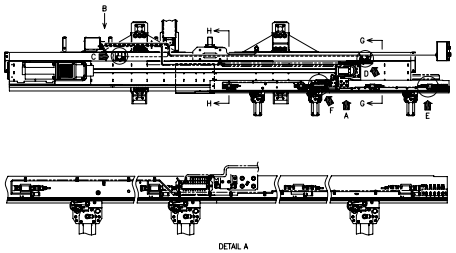		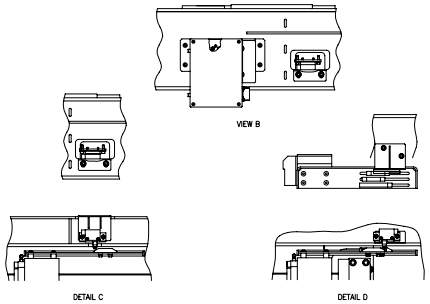		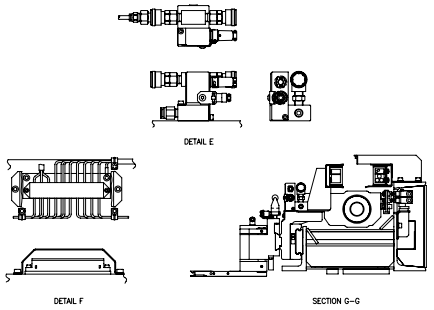		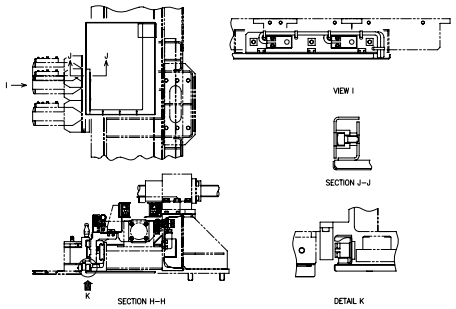	
18	Slide(4)	19	Slide(5)-1/2	19	Slide(5)-2/2	20	Y-Axis-1/5
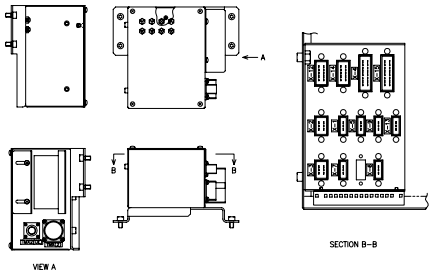		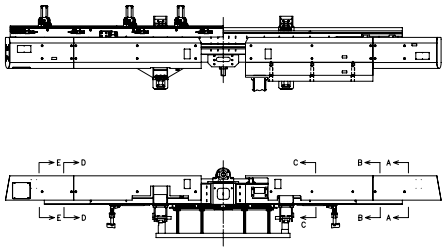		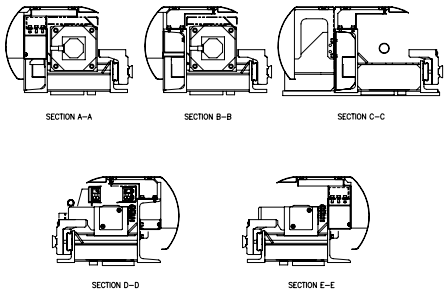		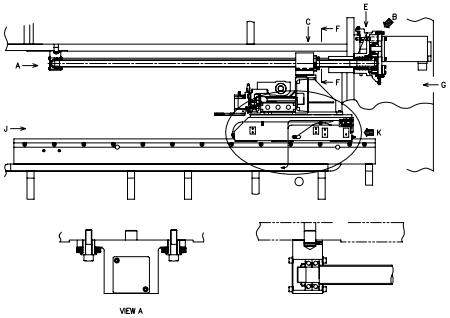	

CONTENTS (5)

20	Y-Axis-2/5	20	Y-Axis-3/5	20	Y-Axis-4/5	20	Y-Axis-5/5
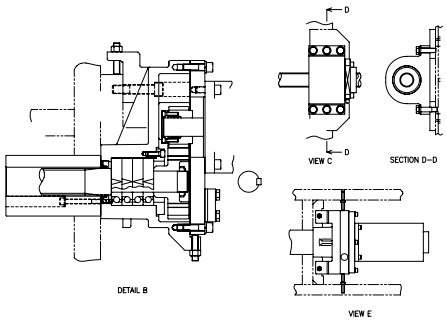		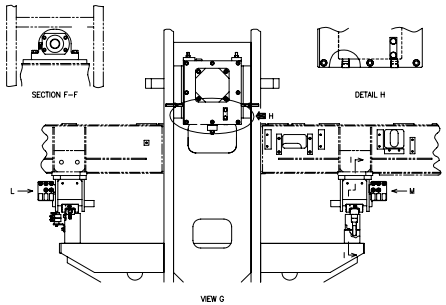		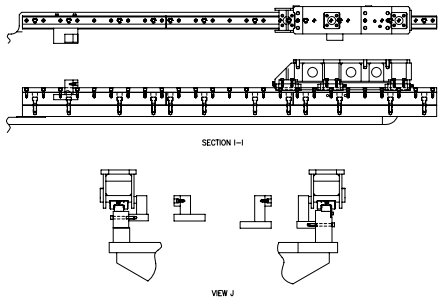		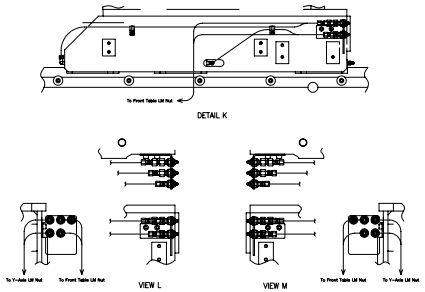	
21	Brush Table(1)-1/2	21	Brush Table(1)-2/2	22	Brush Table(2)-1/4	22	Brush Table(2)-2/4
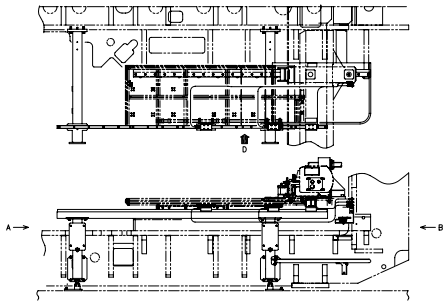		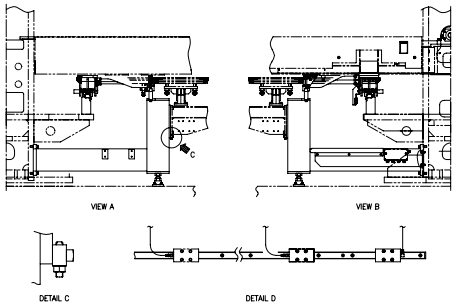		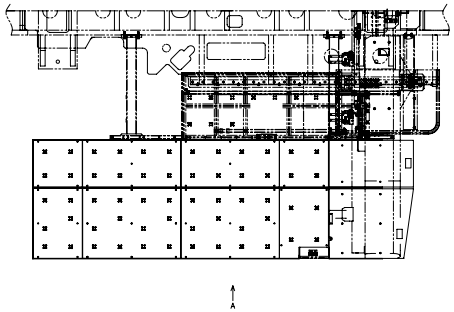		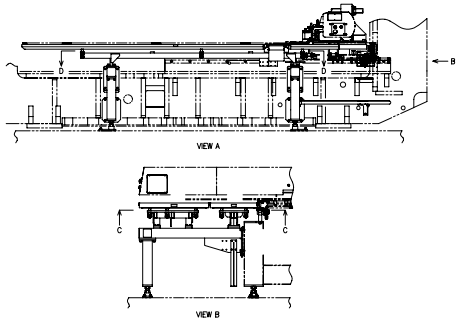	
22	Brush Table(2)-3/4	22	Brush Table(2)-4/4	23	Brush Table(3)-1/3	23	Brush Table(3)-2/3
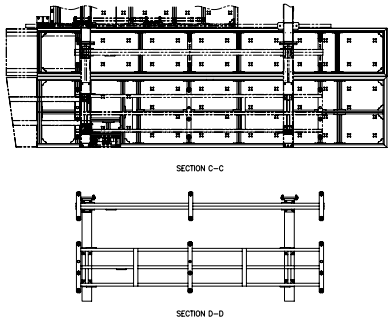		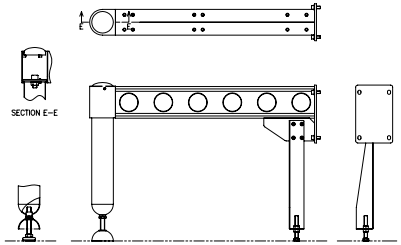		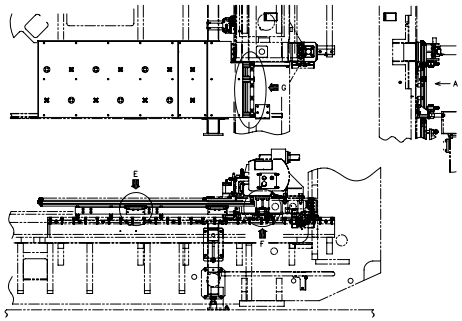		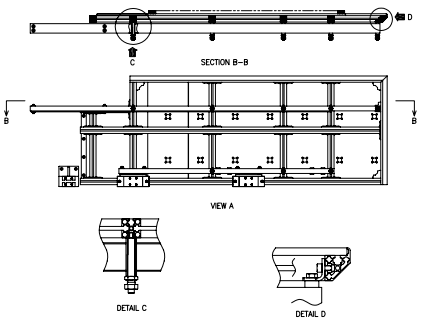	

CONTENTS (6)

23	Brush Table(3)-3/3	24	Brush Table(4)	25	Brush Table(5)	26	Brush Table(6)
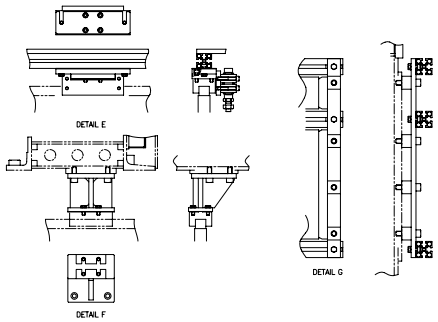		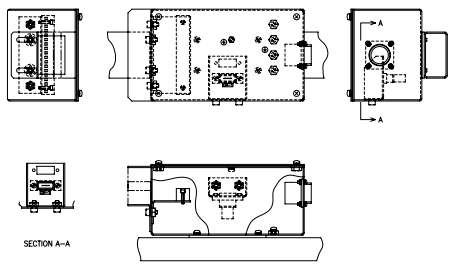		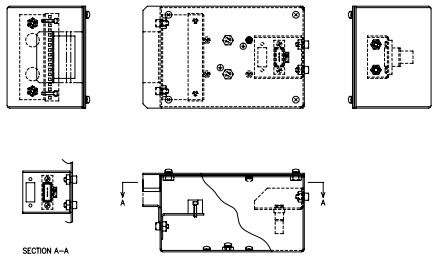		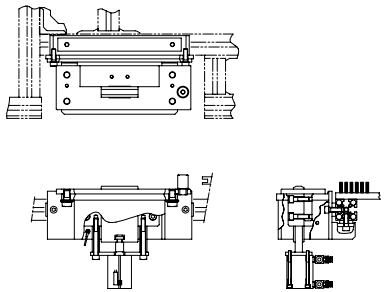	
27	Brush Table(7)	28	Brush Table(8)	29	Brush Table(9)-1/2	29	Brush Table(9)-2/2
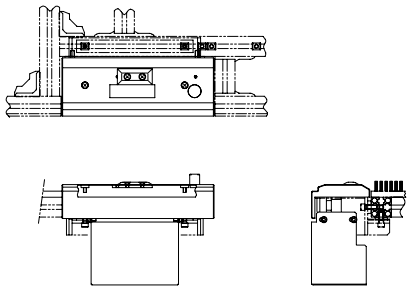		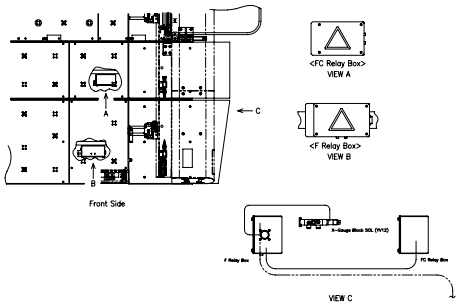		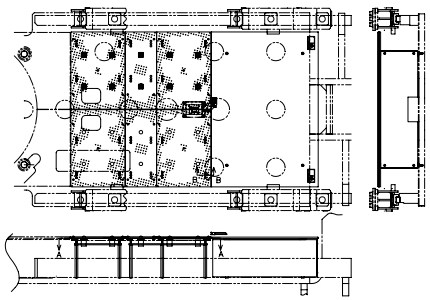		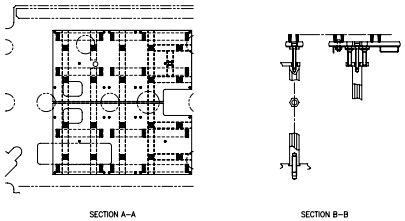	
30	Brush Table(10)-1/2	30	Brush Table(10)-2/2	31	Brush Table(11)-1/2	31	Brush Table(11)-2/2
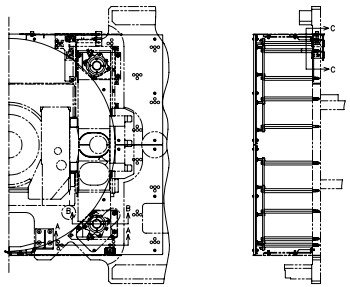		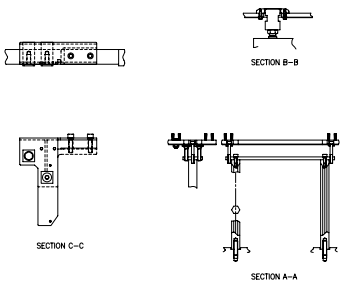		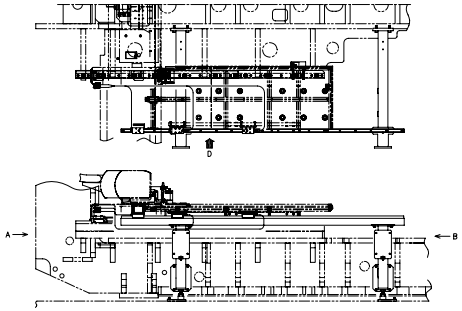		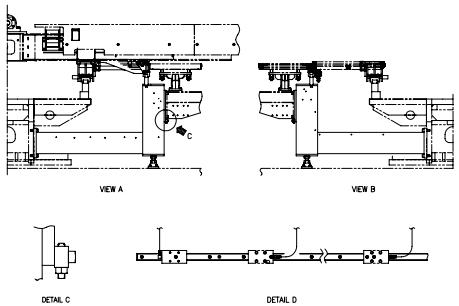	

CONTENTS (7)

32	Brush Table(12)-1/7	32	Brush Table(12)-2/7	32	Brush Table(12)-3/7	32	Brush Table(12)-4/7
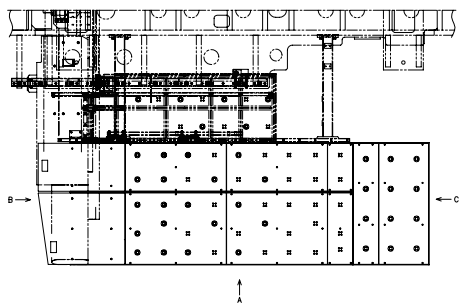		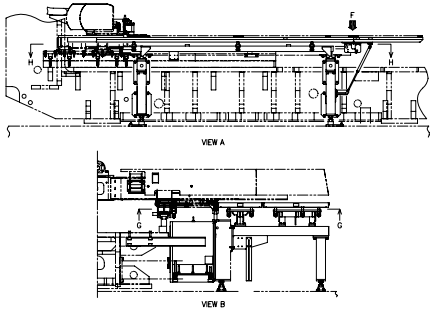		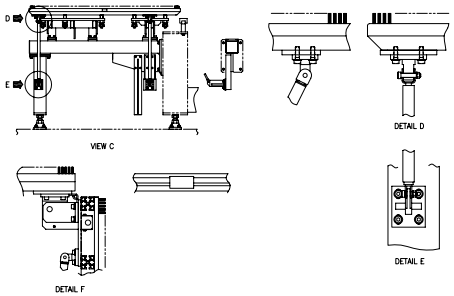		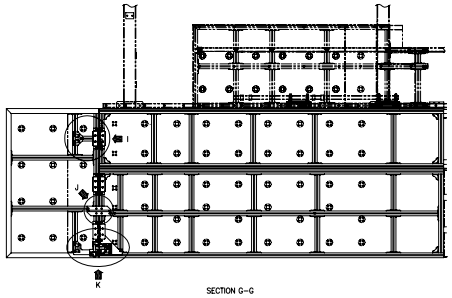	
32	Brush Table(12)-5/7	32	Brush Table(12)-6/7	32	Brush Table(12)-7/7	33	Brush Table(13)-1/3
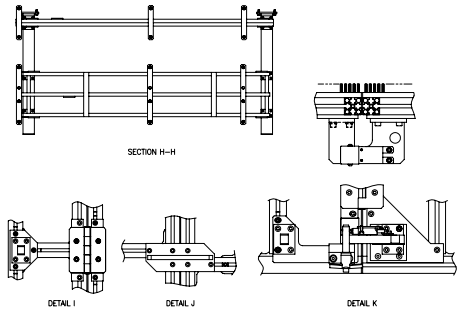		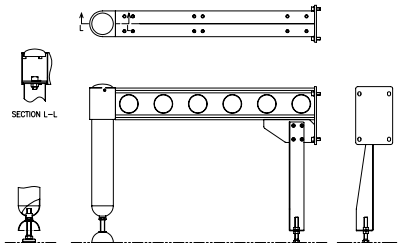		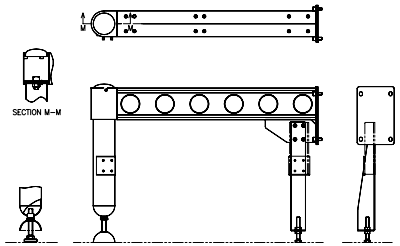		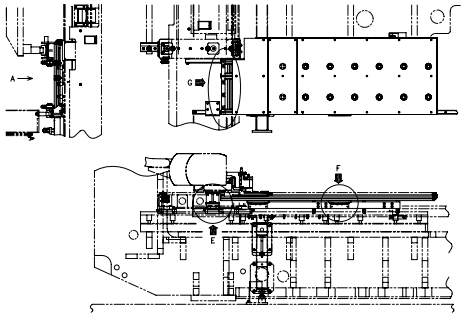	
33	Brush Table(13)-2/3	33	Brush Table(13)-3/3	34	Brush Table(14)-1/3	34	Brush Table(14)-2/3
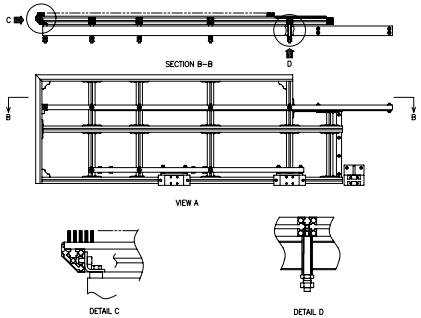		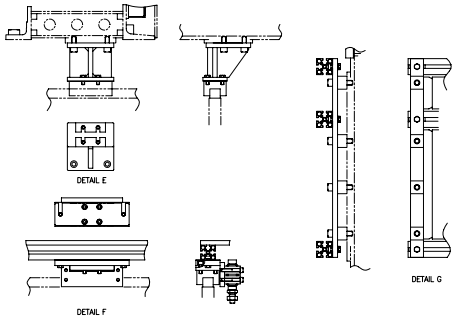		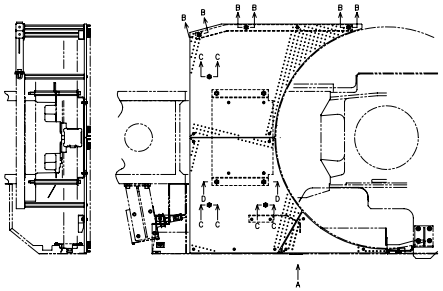		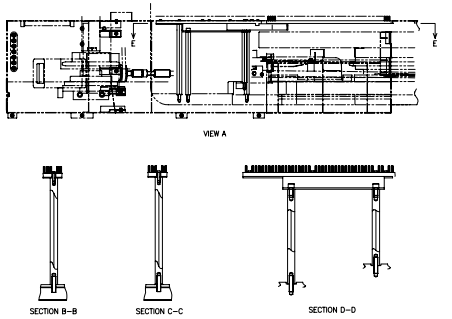	

CONTENTS (8)

34	Brush Table(14)-3/3	35	Brush Table(15)-1/5	35	Brush Table(15)-2/5	35	Brush Table(15)-3/5
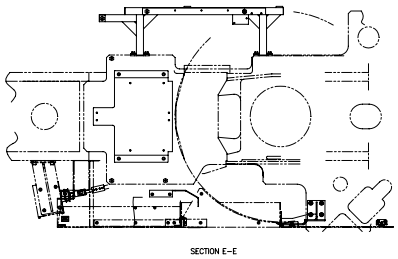		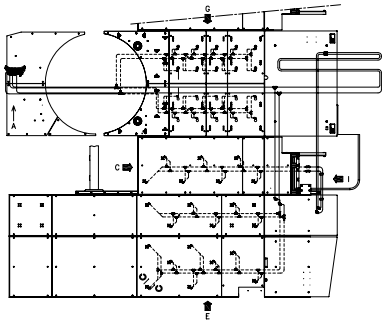		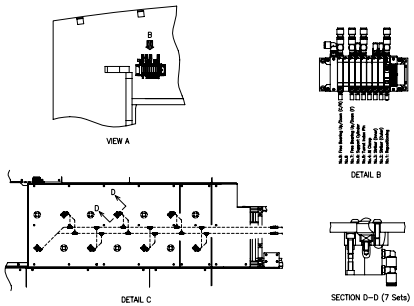		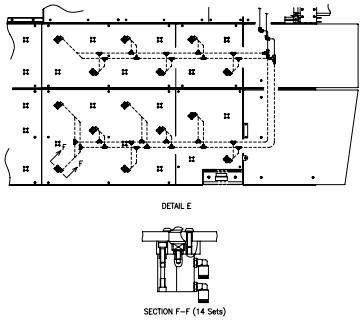	
35	Brush Table(15)-4/5	35	Brush Table(15)-5/5	36	Brush Table(16)	37	Pneumatic Clamp-1/2
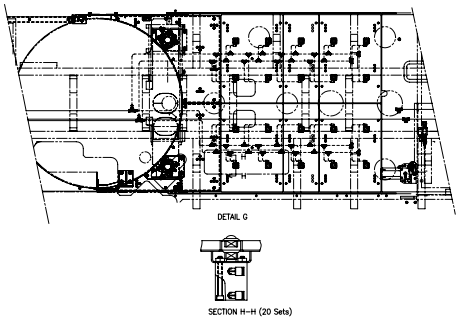		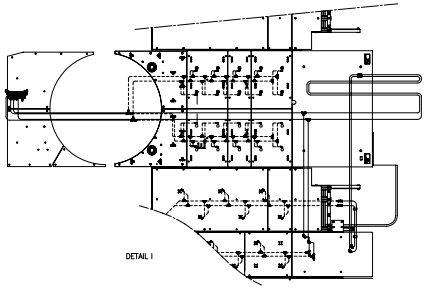		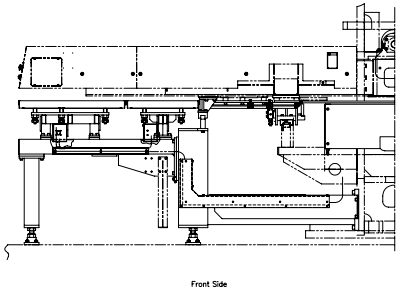		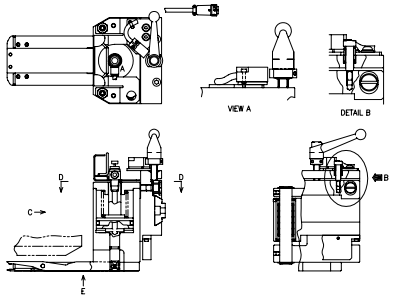	
37	Pneumatic Clamp-2/2	38	Repositioning	39	Piping(1)-1/6	39	Piping(1)-2/6
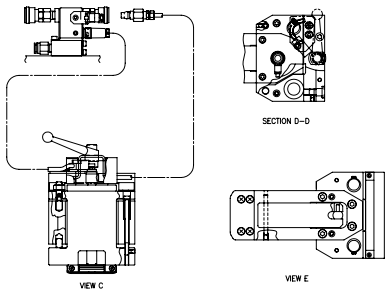		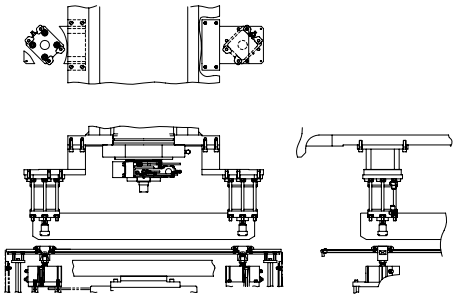		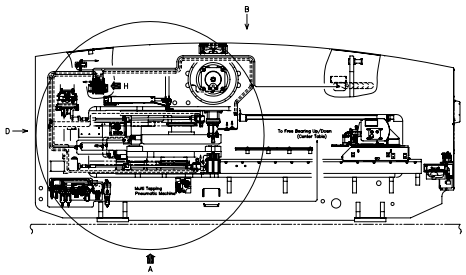		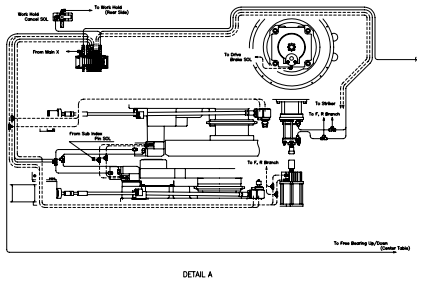	

CONTENTS (9)

39	Piping(1)-3/6	39	Piping(1)-4/6	39	Piping(1)-5/6	39	Piping(1)-6/6
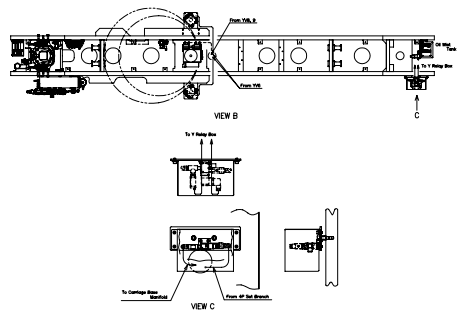		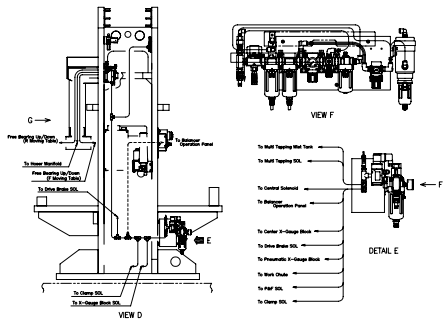		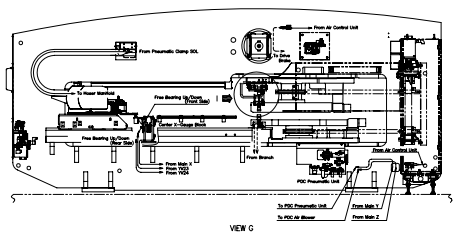		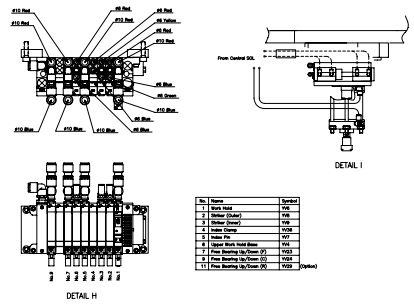	
40	Piping(2)	41	Lubrication-1/3	41	Lubrication-2/3	41	Lubrication-3/3
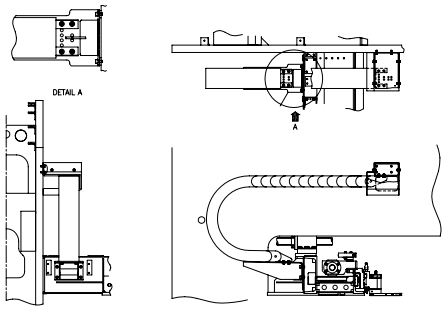		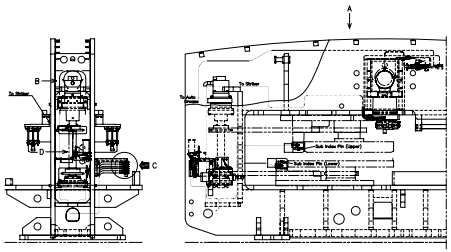		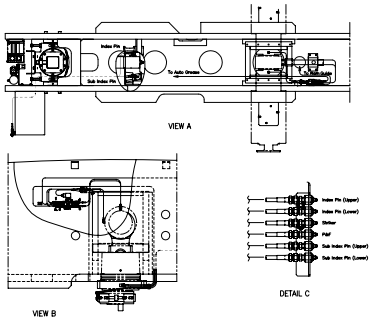		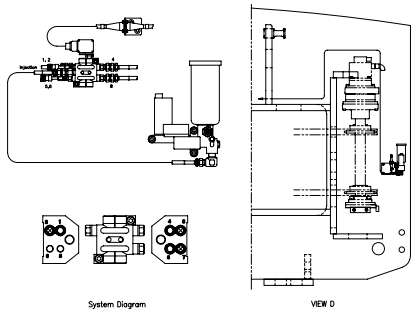	
42	Electric(1)-1/7	42	Electric(1)-2/7	42	Electric(1)-3/7	42	Electric(1)-4/7
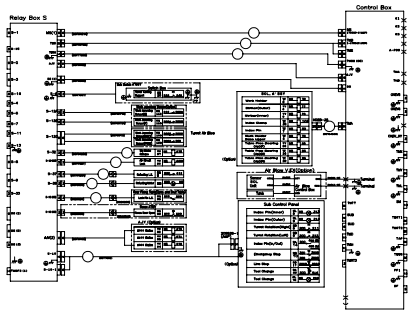		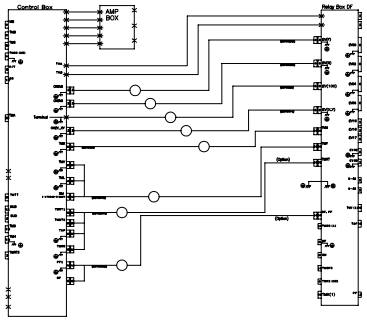		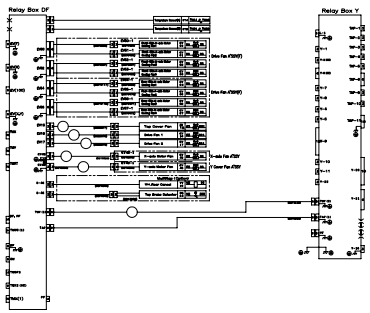		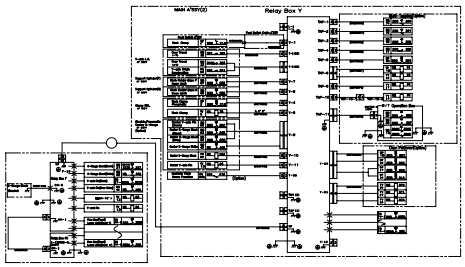	

CONTENTS (10)

42	Electric(1)-5/7	42	Electric(1)-6/7	42	Electric(1)-7/7	43	Electric(2)-1/2
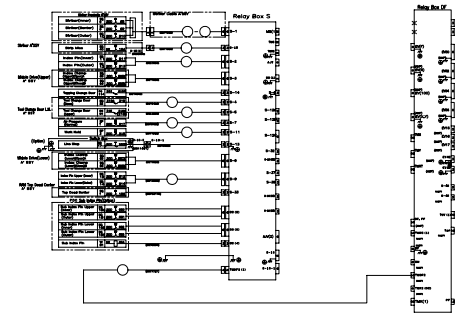		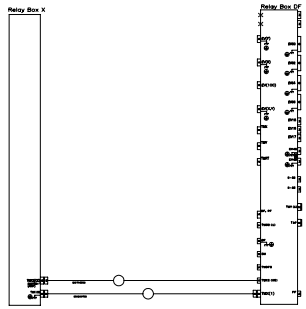		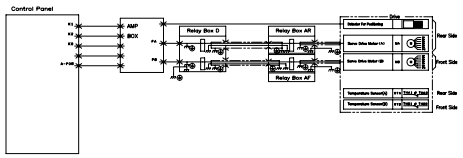		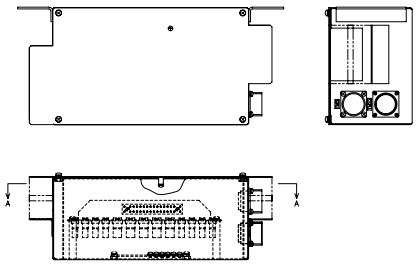	
43	Electric(2)-2/2	44	Electric(3)-1/2	44	Electric(3)-2/2	45	Electric(4)-1/3
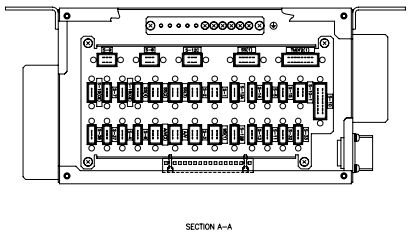		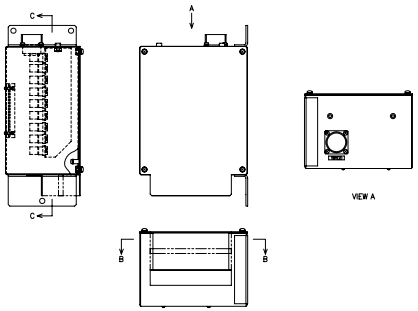		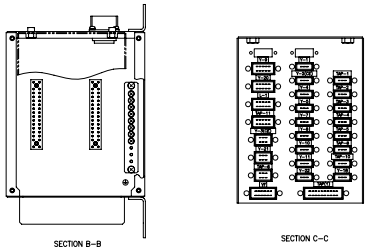		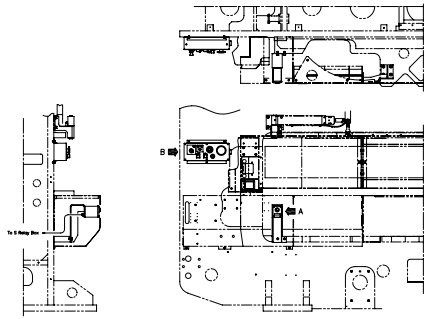	
45	Electric(4)-2/3	45	Electric(4)-3/3	46	Electric(5)	47	Electric(6)-1/2
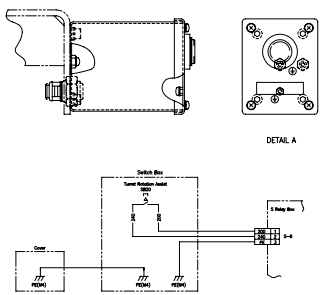		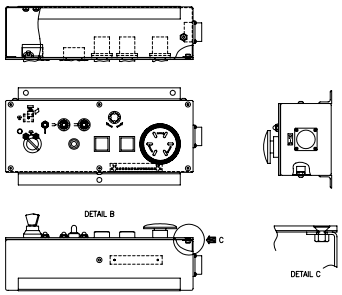		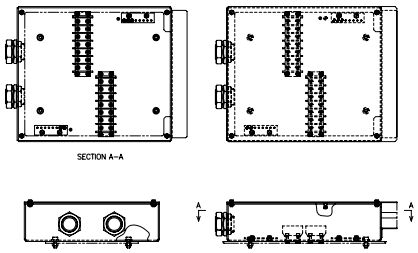		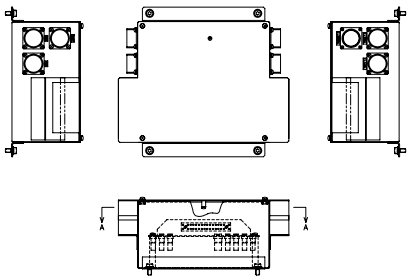	

CONTENTS (11)

47	Electric(6)-2/2	48	Electric(7)-1/2	48	Electric(7)-2/2	49	Electric(8)
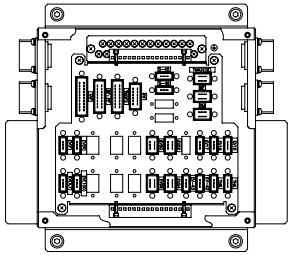		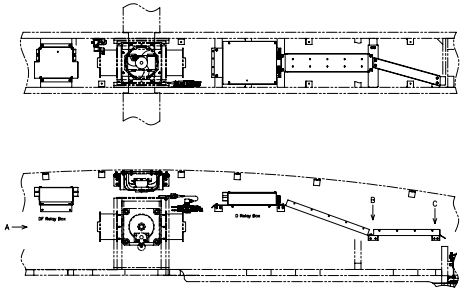		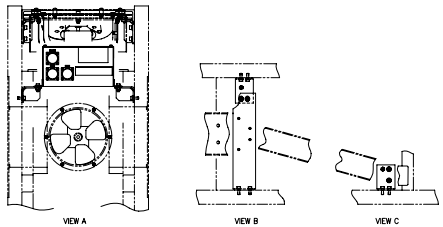		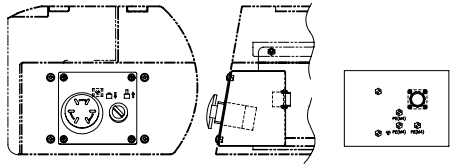	
50	Electric(9)-1/2	50	Electric(9)-2/2	51	Electric(10)	52	Electric(11)-1/2
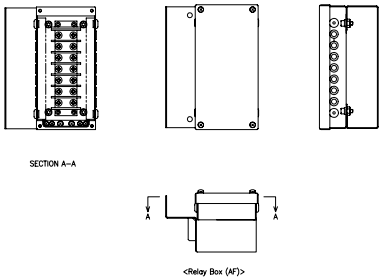		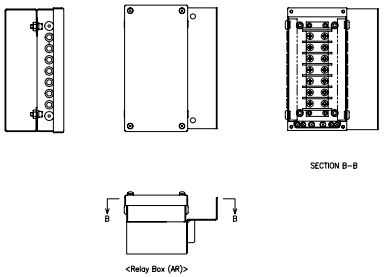		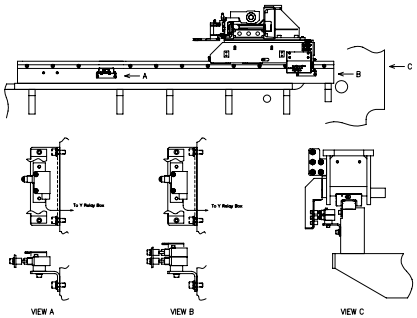		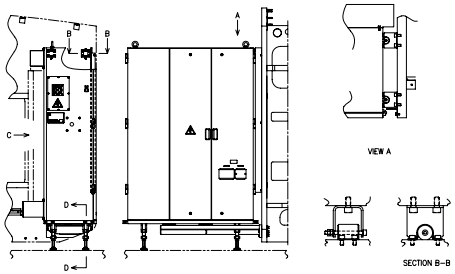	
52	Electric(11)-2/2	53	Electric(12)-1/3	53	Electric(12)-2/3	53	Electric(12)-3/3
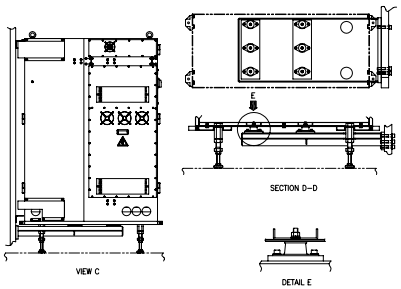		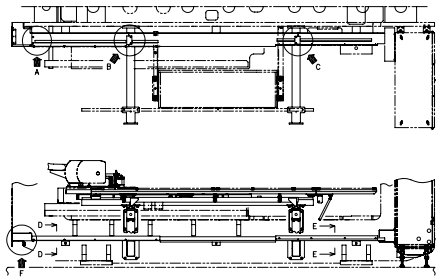		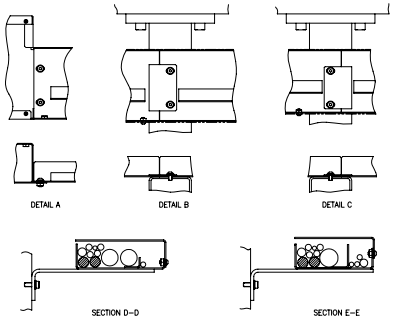		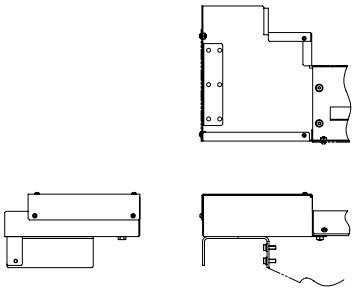	

CONTENTS (12)

54	Electric(13)-1/2	54	Electric(13)-2/2	55	Standard Accessory(1)	56	Standard Accessory(2)-1/3
56	Standard Accessory(2)-2/3	56	Standard Accessory(2)-3/3	57	Standard Accessory(3)	58	Standard Accessory(4)
59	Control Device(1)	60	Control Device(2)-1/10	60	Control Device(2)-2/10	60	Control Device(2)-3/10

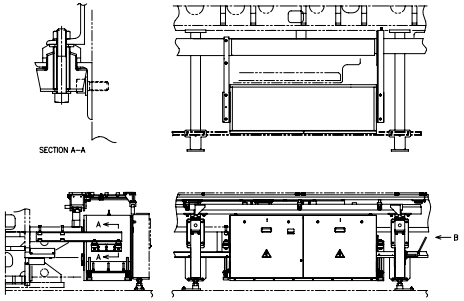

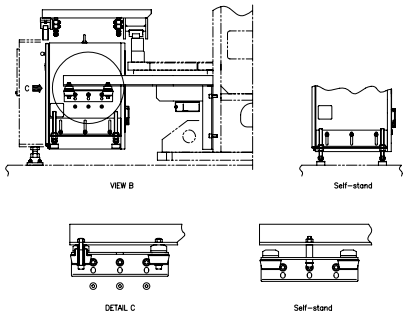

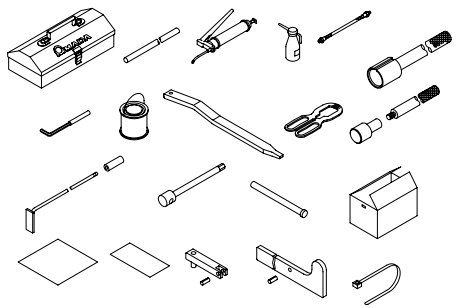

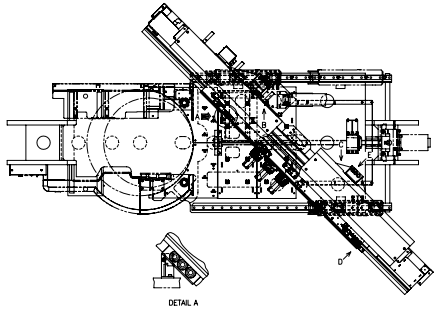

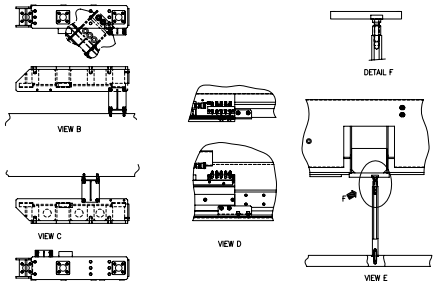

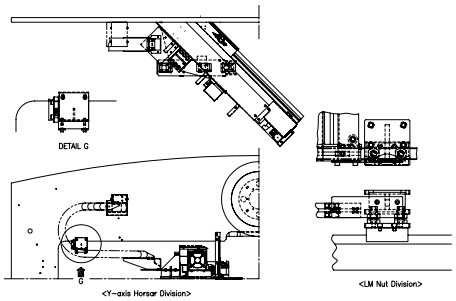

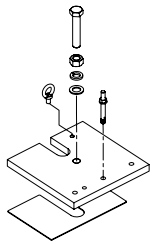

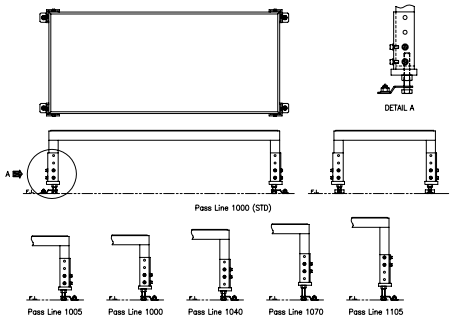

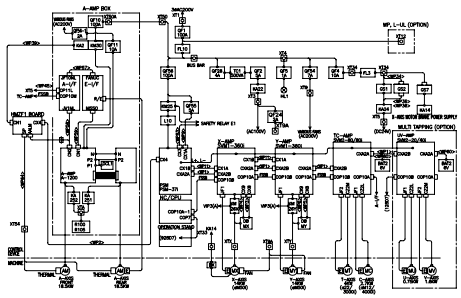

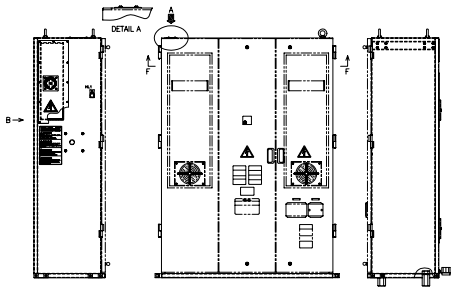

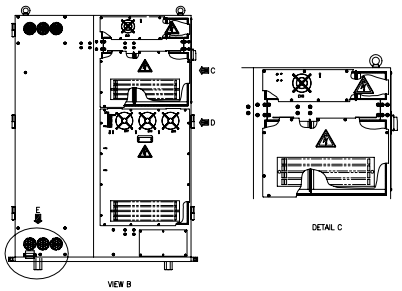

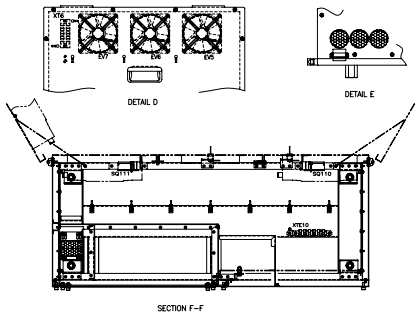

CONTENTS (13)

60	Control Device(2)-4/10	60	Control Device(2)-5/10	60	Control Device(2)-6/10	60	Control Device(2)-7/10
60	Control Device(2)-8/10	60	Control Device(2)-9/10	60	Control Device(2)-10/10	61	Control Device(3)
62	Control Device(4)	63	Control Device(5)-1/3	63	Control Device(5)-2/3	63	Control Device(5)-3/3

CONTENTS (14)

64	Control Device(6)-1/2	64	Control Device(6)-2/2	65	Control Device(7)-1/7	65	Control Device(7)-2/7
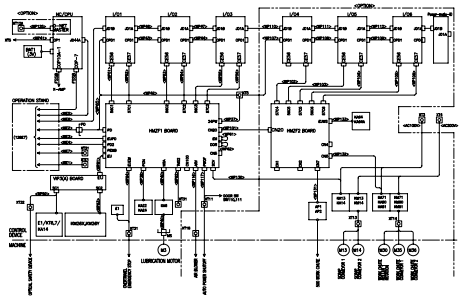		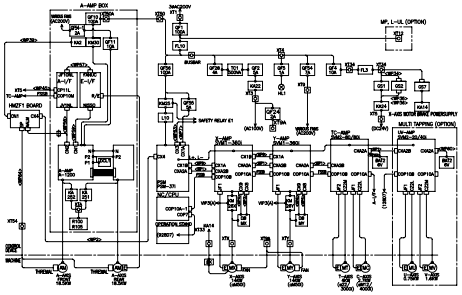		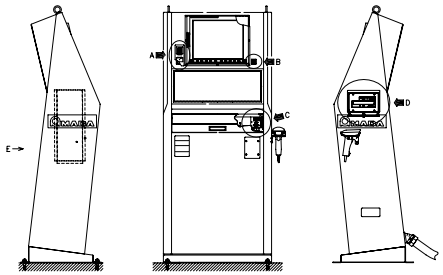		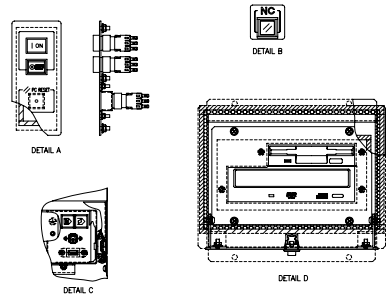	
65	Control Device(7)-3/7	65	Control Device(7)-4/7	65	Control Device(7)-5/7	65	Control Device(7)-6/7
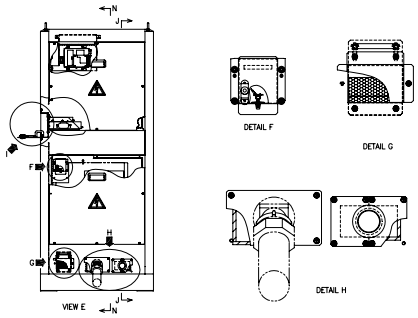		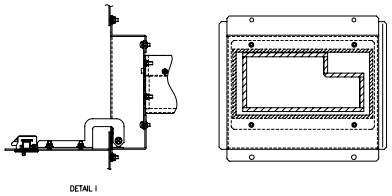		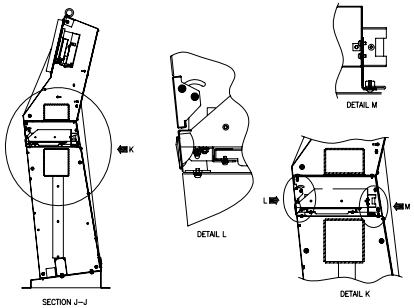		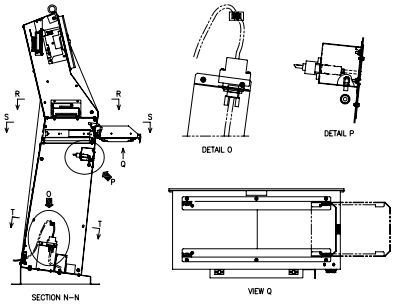	
65	Control Device(7)-7/7	66	Control Device(8)-1/2	66	Control Device(8)-2/2	67	Control Device(9)
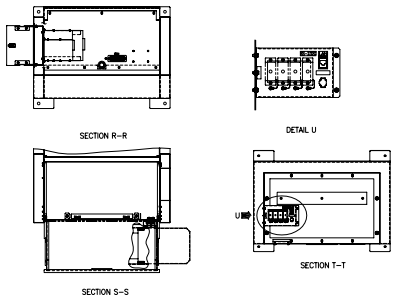		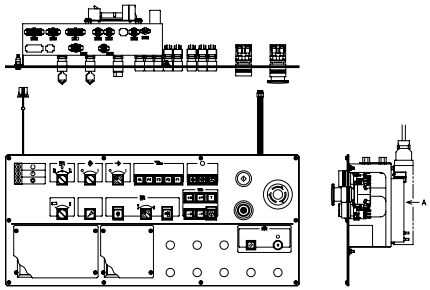		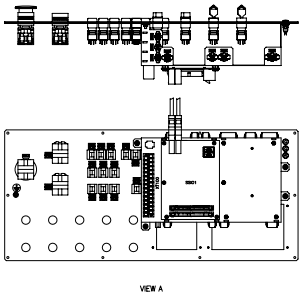		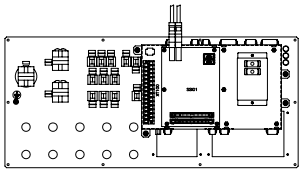	

CONTENTS (15)

68	Control Device(10)-1/4	68	Control Device(10)-2/4	68	Control Device(10)-3/4	68	Control Device(10)-4/4
69	Control Device(11)	70	Control Device(12)	71	Control Device(13)	72	Control Device(14)
73	Control Device(15)	74	Control Device(16)	75	Control Device(17)-1/2	75	Control Device(17)-2/2

CONTENTS (16)

76	Control Device(18)	77	Control Device(19)	78	Control Device(20)	79	AI(1)-1/4
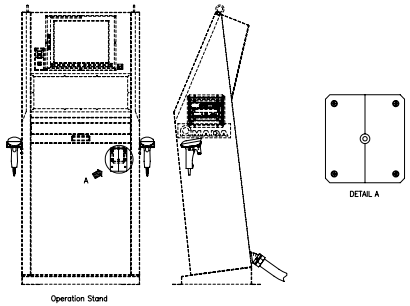		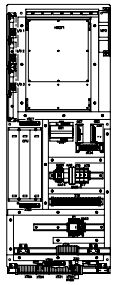		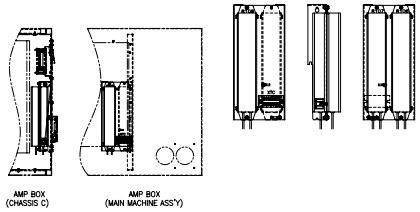		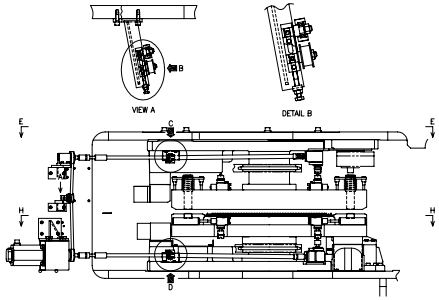	

79	AI(1)-2/4	79	AI(1)-3/4	79	AI(1)-4/4	80	AI(2)-1/2
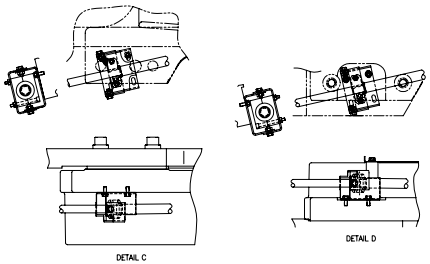		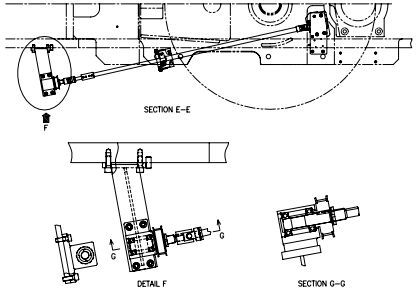		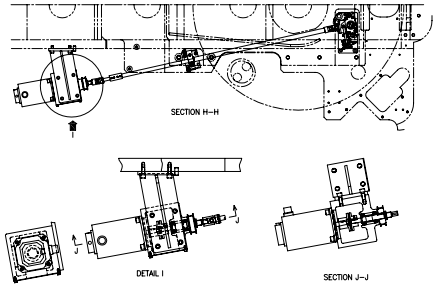		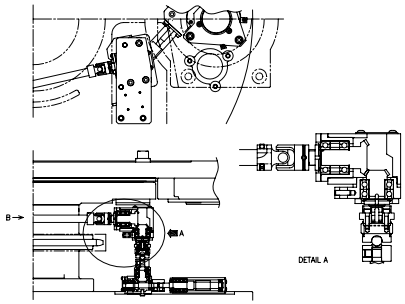	

80	AI(2)-2/2	81	AI(3)-1/2	81	AI(3)-2/2	82	AI(4)-1/2
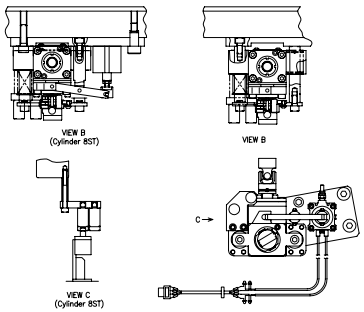		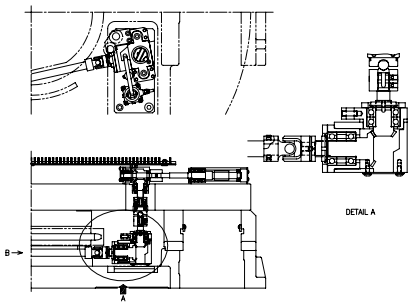		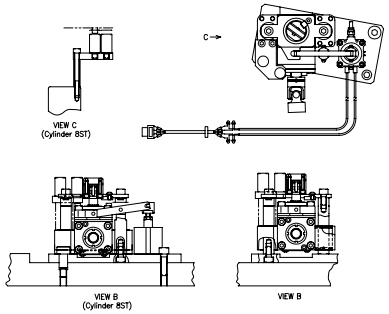		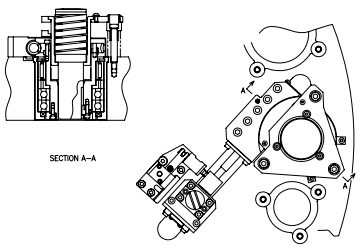	

CONTENTS (17)

82	AI(4)-2/2	83	AI(5)-1/2	83	AI(5)-2/2	84	AI(6)-1/2
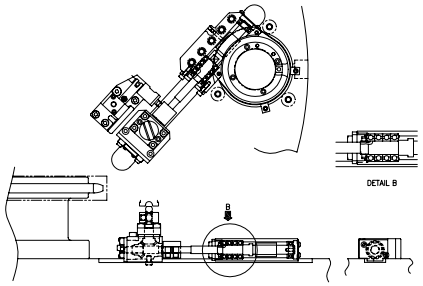		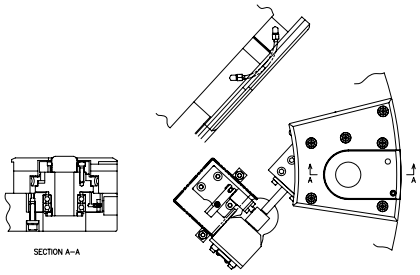		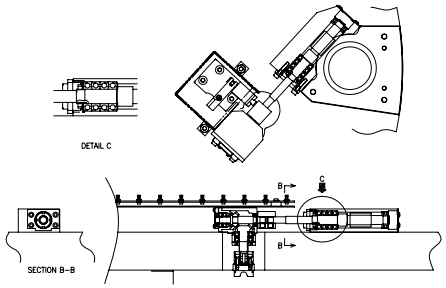		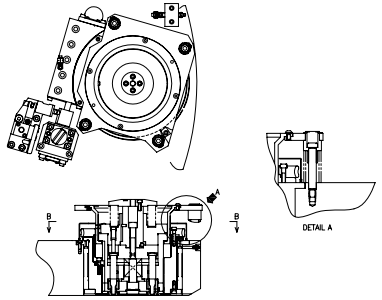	
84	AI(6)-2/2	85	AI(7)-1/2	85	AI(7)-2/2	86	AI(8)
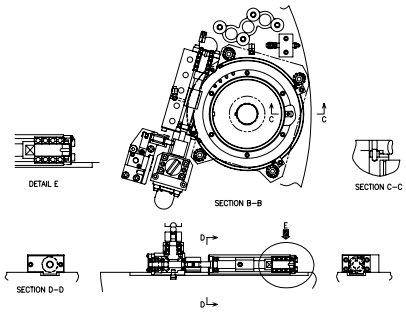		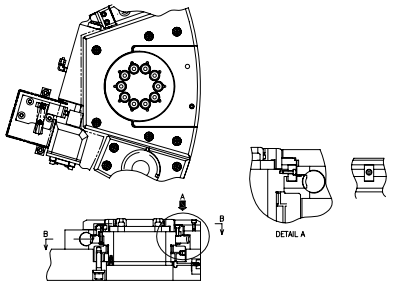		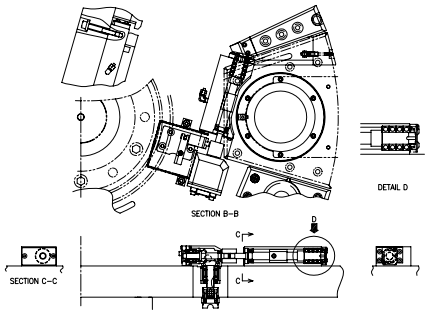		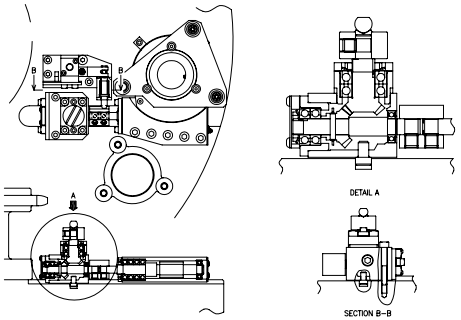	
87	AI(9)	88	AI(10)	89	AI(11)-1/2	89	AI(11)-2/2
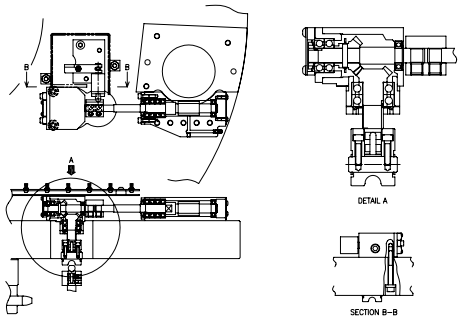		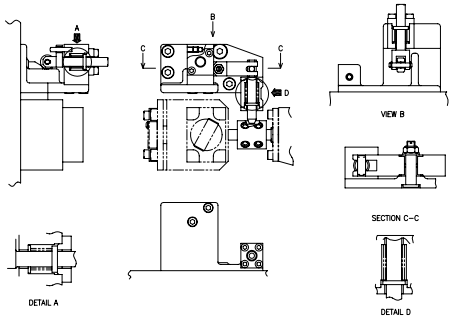		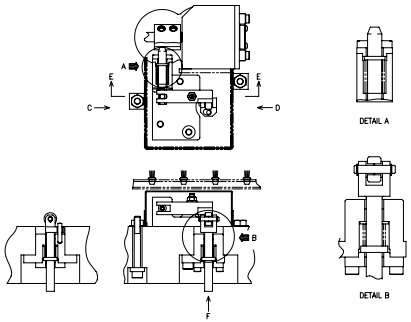		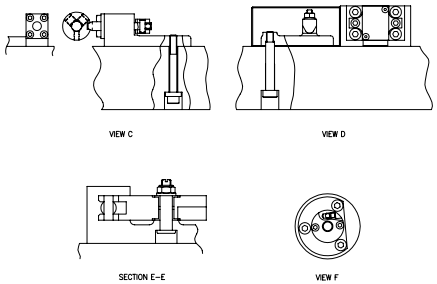	

Ver.1.1

CONTENTS (18)

90	AI(12)-1/2	90	AI(12)-2/2	91	AI(13)	92	Turret B(1)-1/3
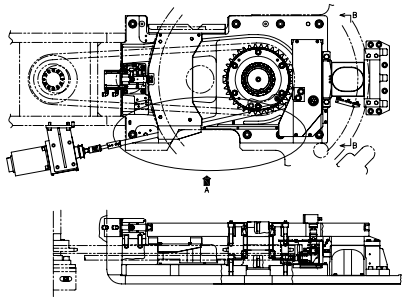		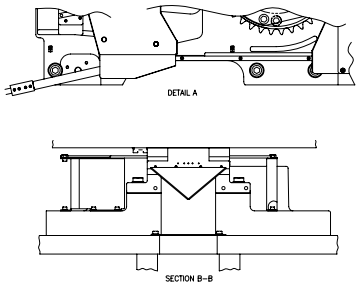		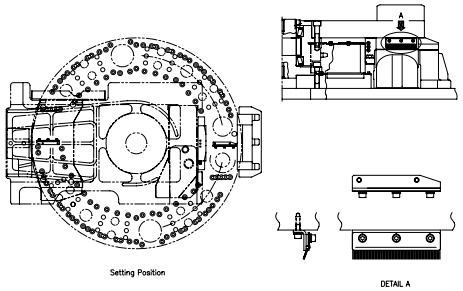		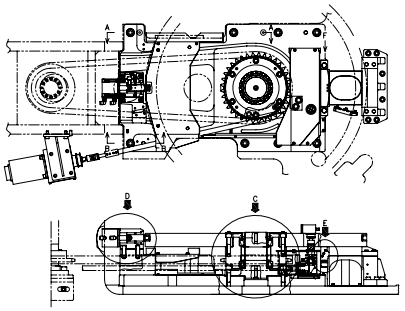	
92	Turret B(1)-2/3	92	Turret B(1)-3/3	93	Turret B(2)-1/2	93	Turret B(2)-2/2
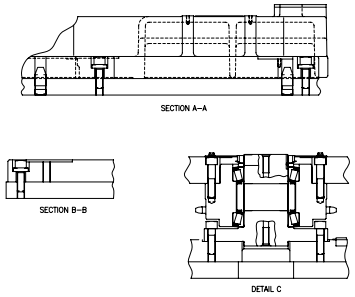		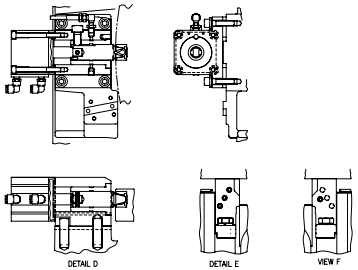		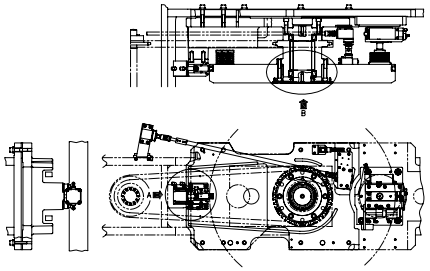		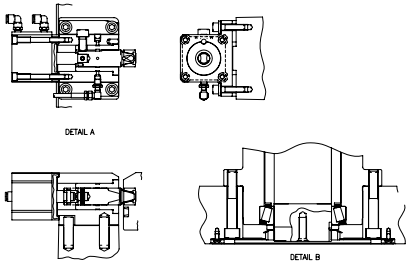	
94	Turret B(3)-1/3	94	Turret B(3)-2/3	94	Turret B(3)-3/3	95	Turret B(4)
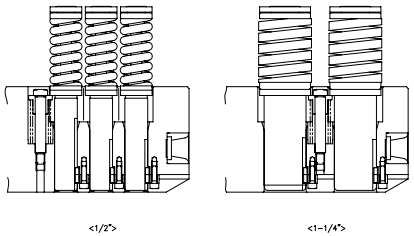		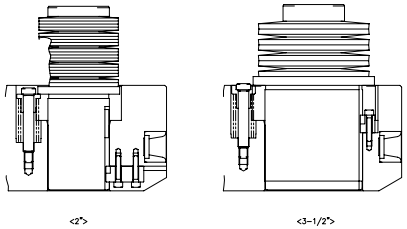		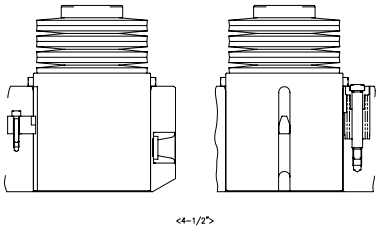		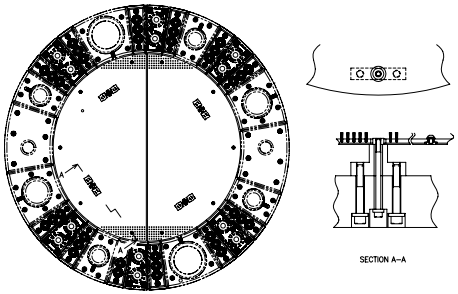	

CONTENTS (19)

96	Turret B(5)	97	Turret B(6)	98	Turret B(7)	99	Turret B(8)
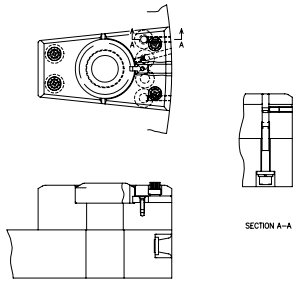		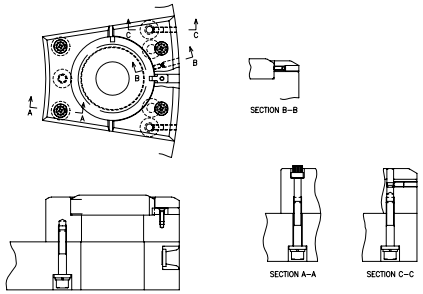		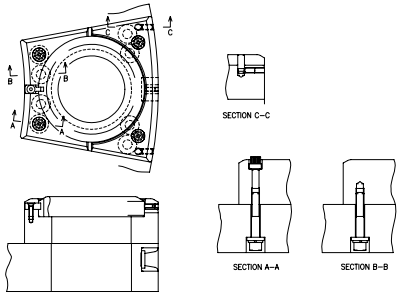		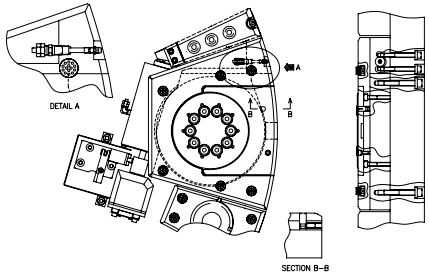	
100	Turret B(9)	101	Turret B(10)	102	Turret B-PV(1)-1/3	102	Turret B-PV(1)-2/3
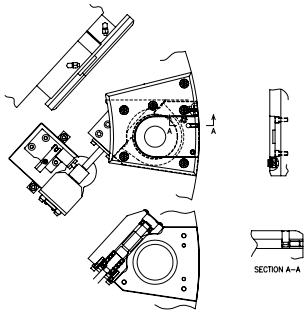		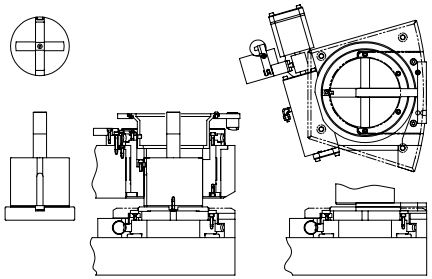		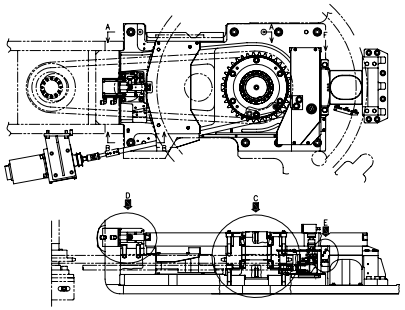		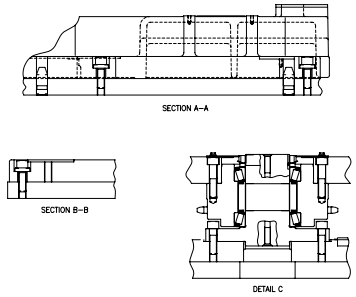	
102	Turret B-PV(1)-3/3	103	Turret B-PV(2)-1/2	103	Turret B-PV(2)-2/2	104	Turret B-PV(3)-1/3
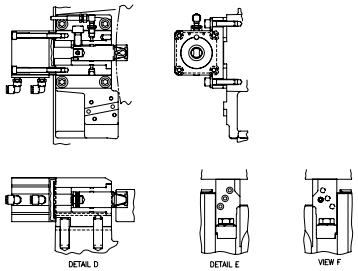		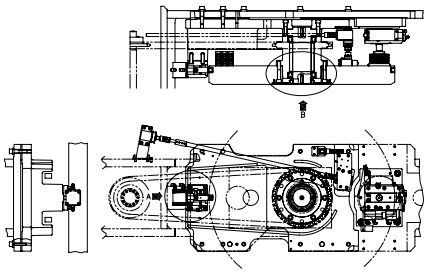		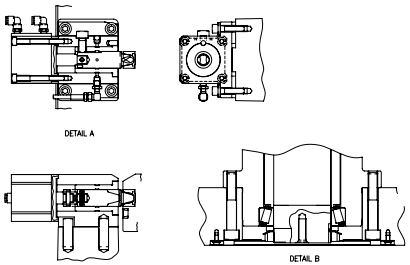		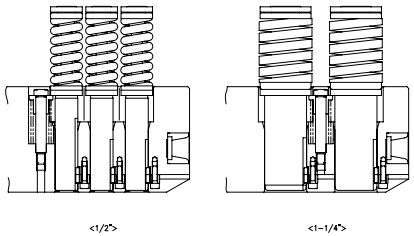	

CONTENTS (20)

104	Turret B-PV(3)-2/3	104	Turret B-PV(3)-3/3	105	Turret B-PV(4)	106	Turret B-PV(5)
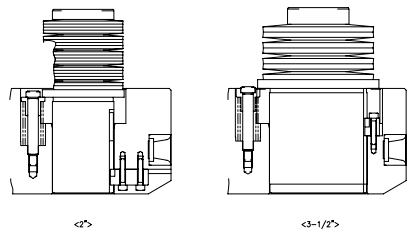		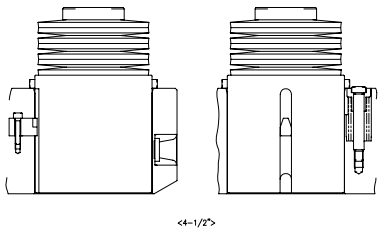		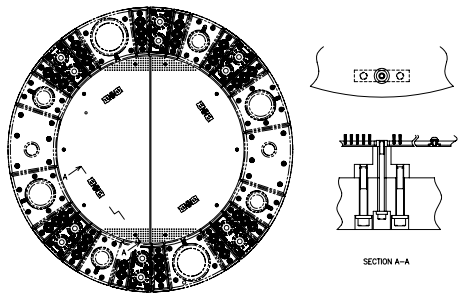		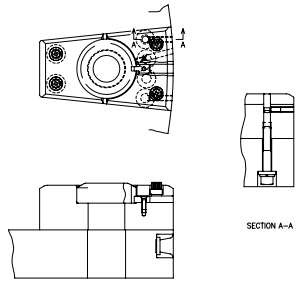	
107	Turret B-PV(6)	108	Turret B-PV(7)	109	Turret B-PV(8)	110	Turret B-PV(9)
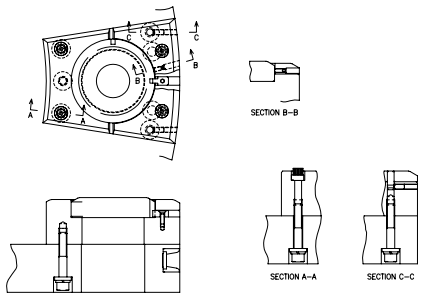		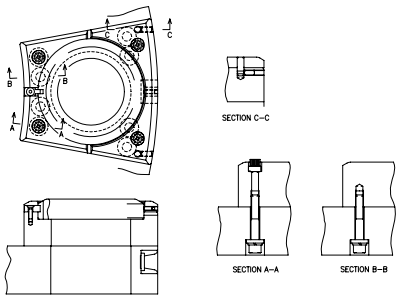		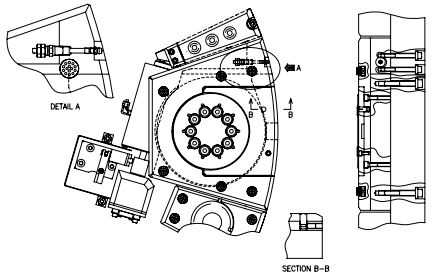		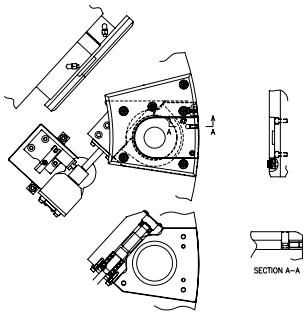	
111	Turret B-PV(10)	112	Turret B-P&F(1)-1/3	112	Turret B-P&F(1)-2/3	112	Turret B-P&F(1)-3/3
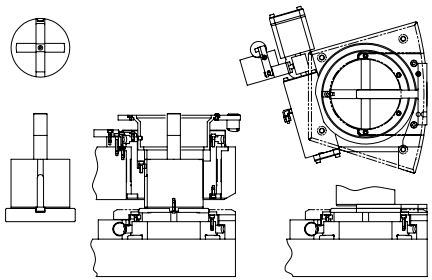		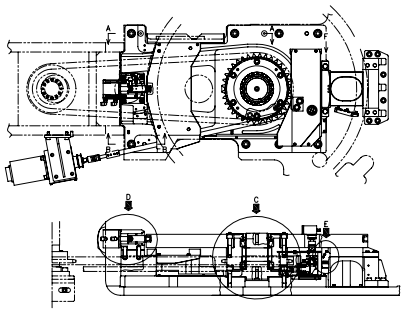		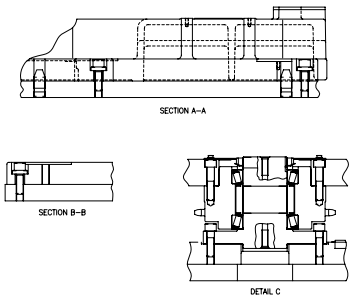		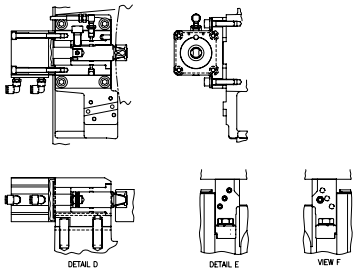	

CONTENTS (21)

113	Turret B-P&F(2)-1/2	113	Turret B-P&F(2)-2/2	114	Turret B-P&F(3)-1/3	114	Turret B-P&F(3)-2/3
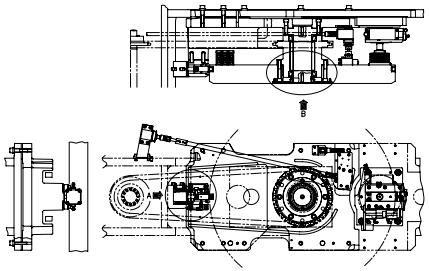		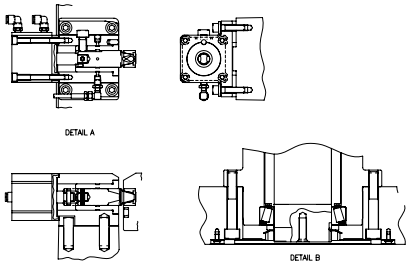		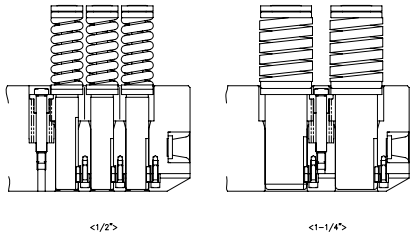		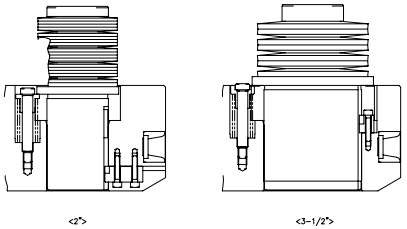	
114	Turret B-P&F(3)-3/3	115	Turret B-P&F(4)	116	Turret B-P&F(5)	117	Turret B-P&F(6)
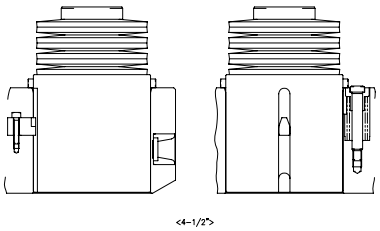		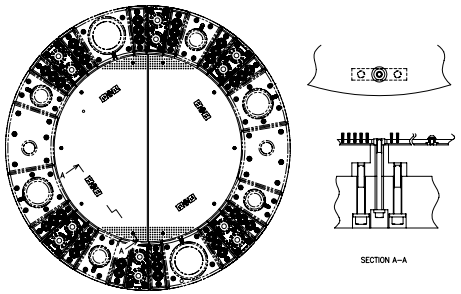		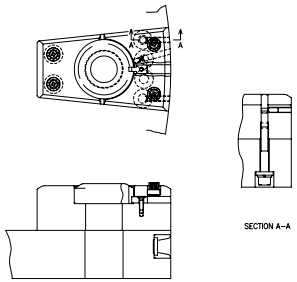		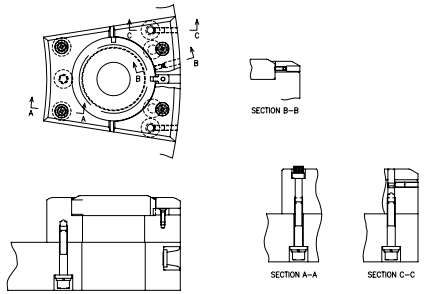	
118	Turret B-P&F(7)	119	Turret B-P&F(8)	120	Turret B-P&F(9)	121	Turret B-P&F(10)
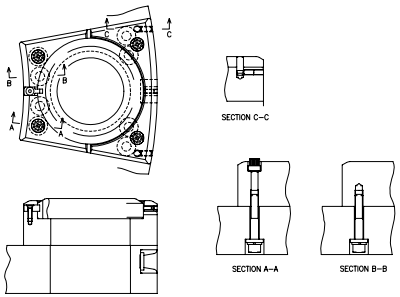		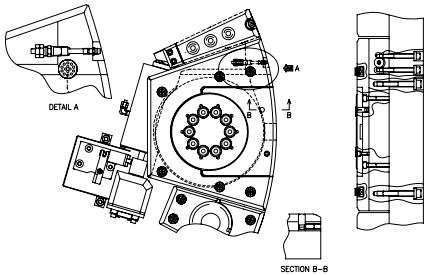		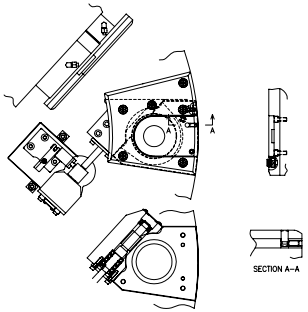		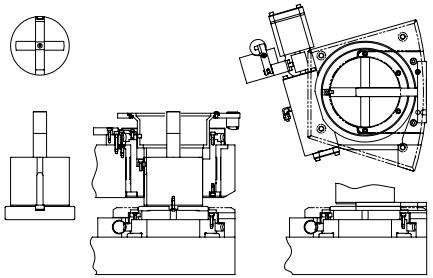	

CONTENTS (22)

122	Turret B-P&F+PV(1)-1/3	122	Turret B-P&F+PV(1)-2/3	122	Turret B-P&F+PV(1)-3/3	123	Turret B-P&F+PV(2)-1/2
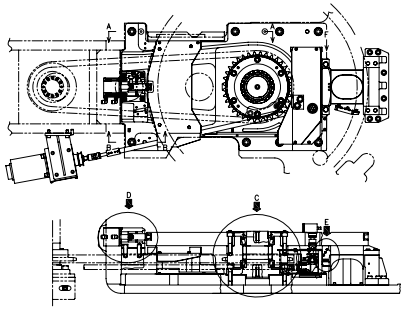		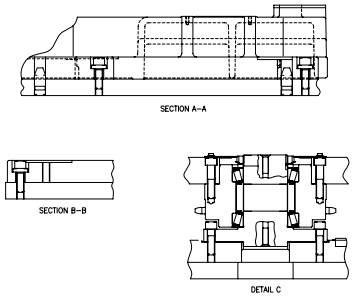		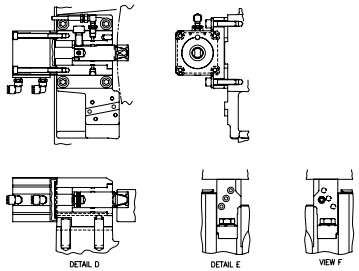		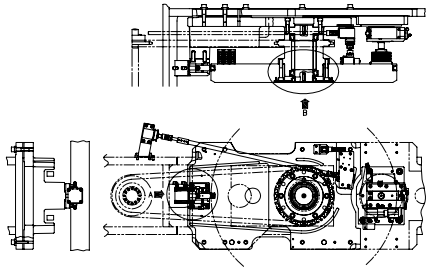	
123	Turret B-P&F+PV(2)-2/2	124	Turret B-P&F+PV(3)-1/3	124	Turret B-P&F+PV(3)-2/3	124	Turret B-P&F+PV(3)-3/3
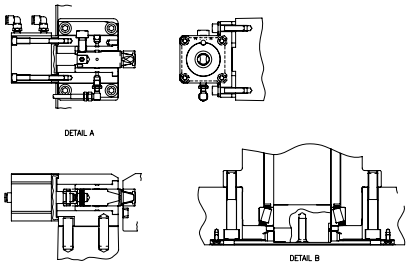		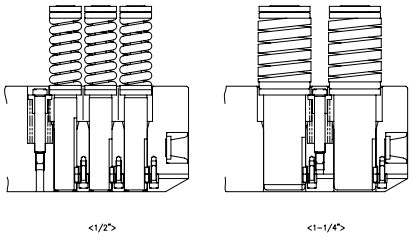		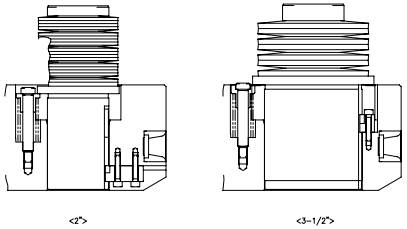		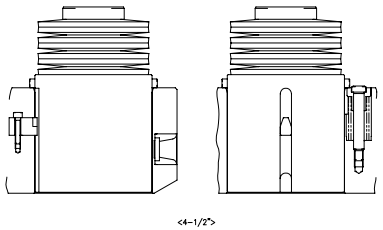	
125	Turret B-P&F+PV(4)	126	Turret B-P&F+PV(5)	127	Turret B-P&F+PV(6)	128	Turret B-P&F+PV(7)
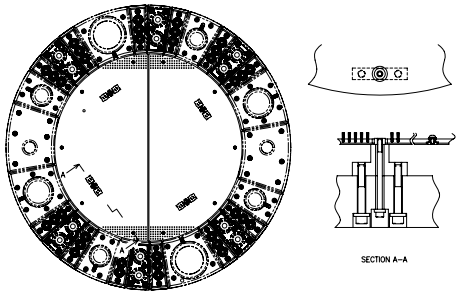		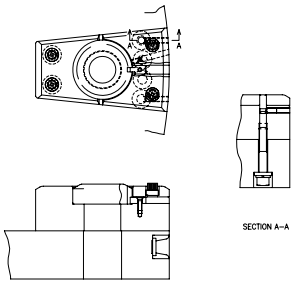		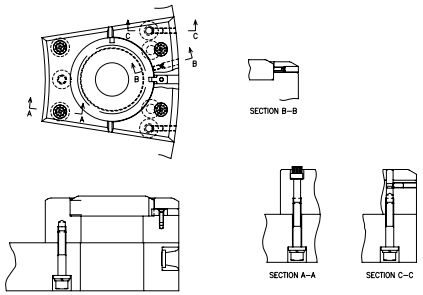		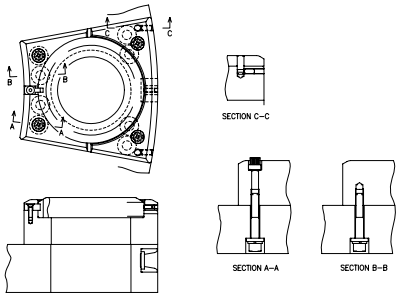	

CONTENTS (23)

129	Turret B-P&F+PV(8)	130	Turret B-P&F+PV(9)	131	Turret B-P&F+PV(10)	132	Assembling Adjustment
133	Support Cylinder-1/2	133	Support Cylinder-2/2	134	Balancer-1/3	134	Balancer-2/3
134	Balancer-3/3	135	Punch Assembling Jig	136	Air Blower V•EX(1)-1/3	136	Air Blower V•EX(1)-2/3

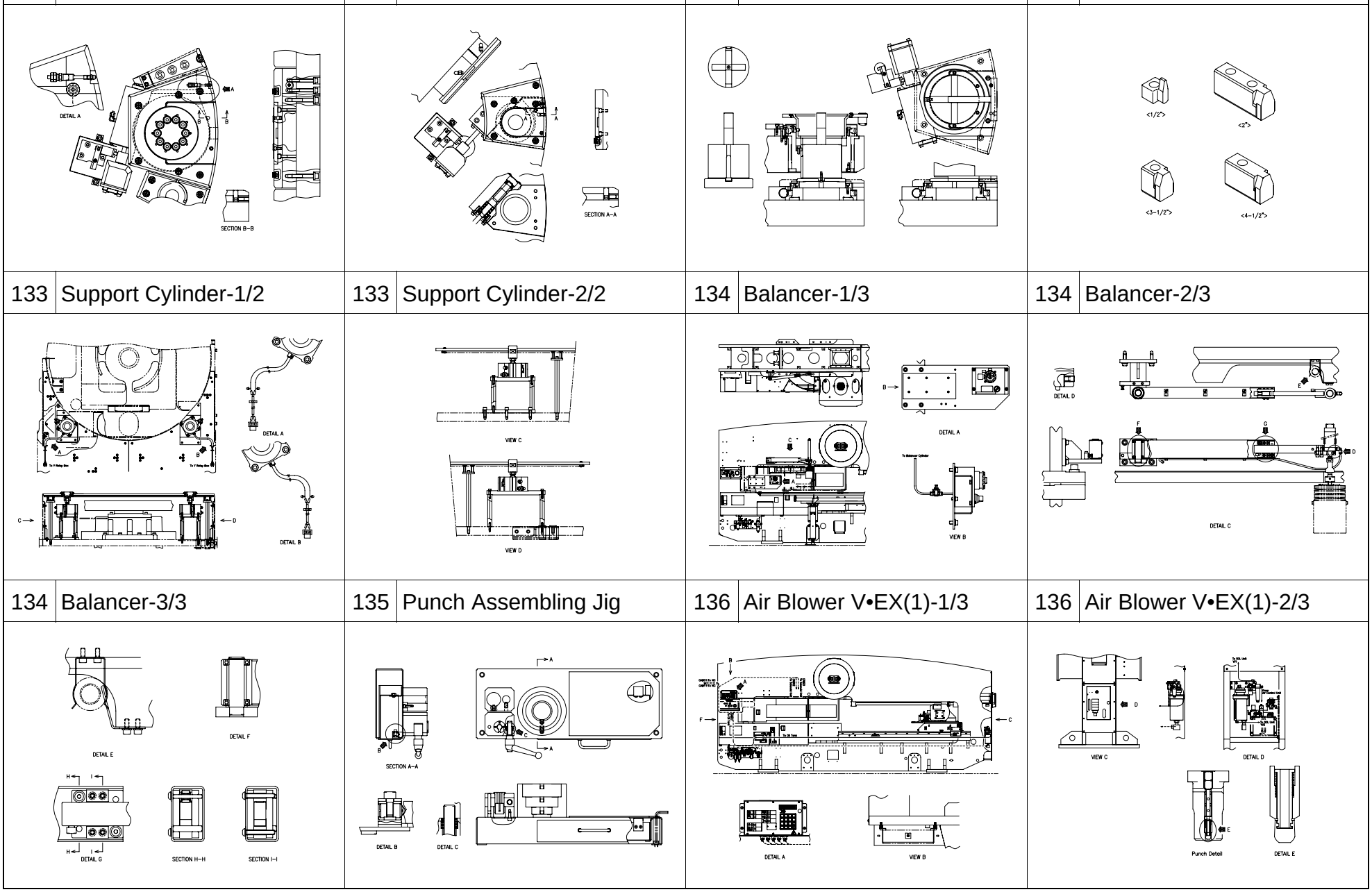

CONTENTS (24)

136	Air Blower V•EX(1)-3/3	137	Air Blower V•EX(2)	138	Work Jamming Sensor(1)	139	Work Jamming Sensor(2)
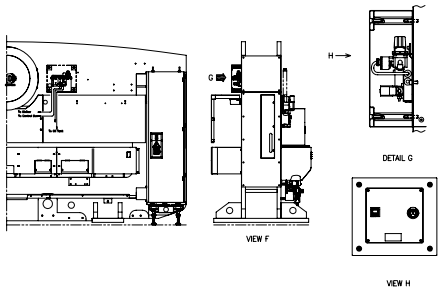		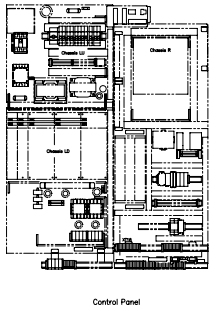		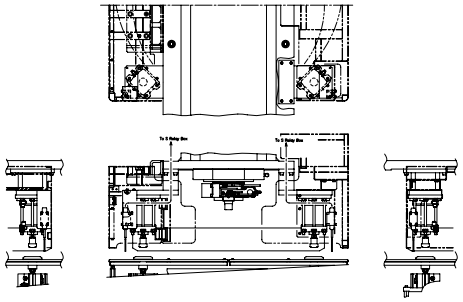		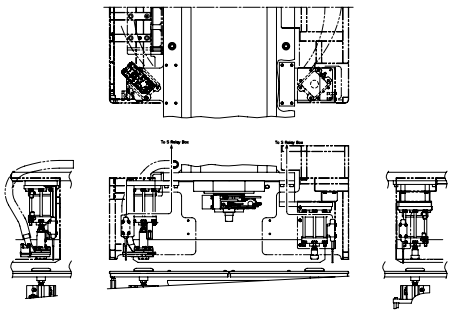	
140	Floating Brush(1)-1/3	140	Floating Brush(1)-2/3	140	Floating Brush(1)-3/3	141	Floating Brush(2)-1/3
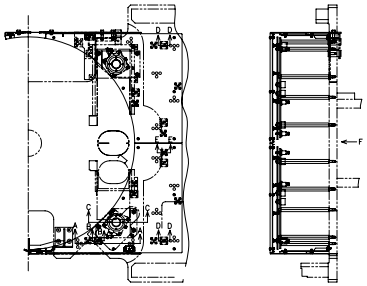		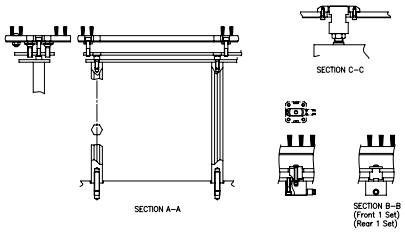		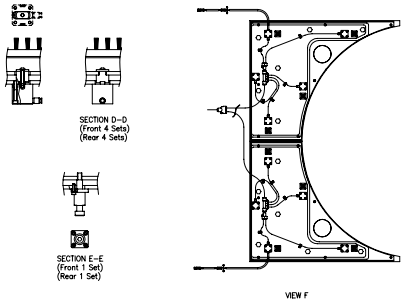		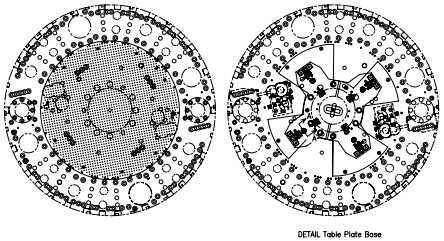	
141	Floating Brush(2)-2/3	141	Floating Brush(2)-3/3	142	Floating Brush(3)	143	Floating Brush(4)-1/2
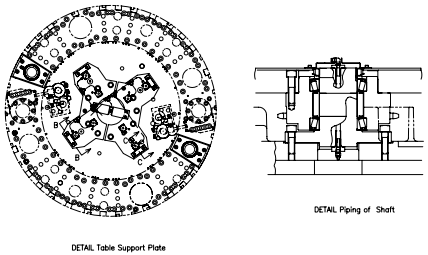		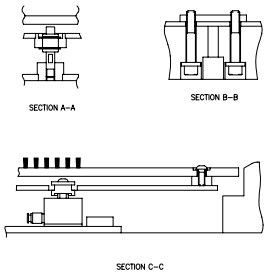		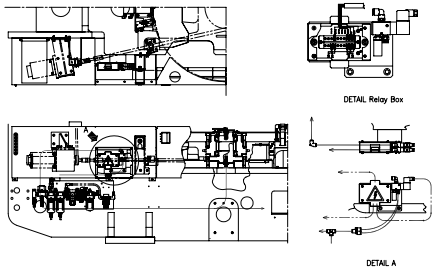		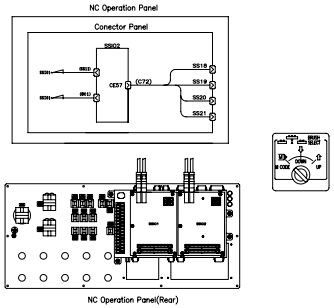	

CONTENTS (25)

143 Floating Brush(4)-2/2

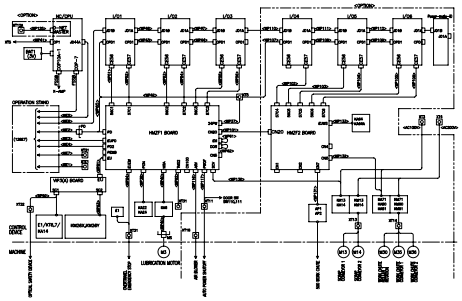

144 Floating Brush (Multi Tapping)(1)-1/3

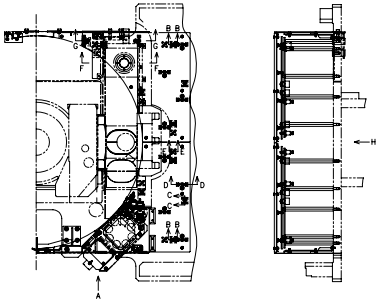

144 Floating Brush (Multi Tapping)(1)-2/3

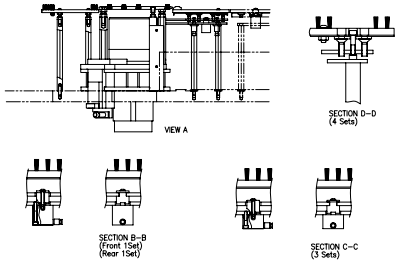

144 Floating Brush (Multi Tapping)(1)-3/3

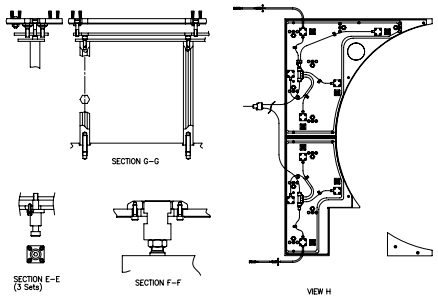

145 Floating Brush (Multi Tapping)(2)-1/3

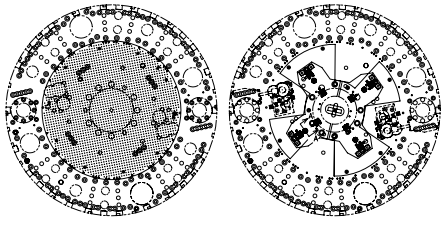

145 Floating Brush (Multi Tapping)(2)-2/3

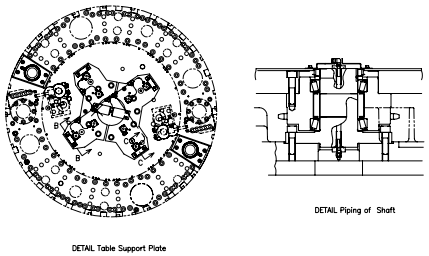

145 Floating Brush (Multi Tapping)(2)-3/3

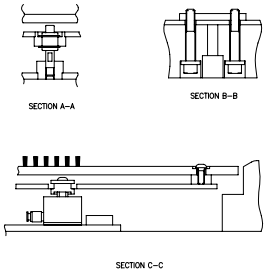

146 Floating Brush (Multi Tapping)(3)

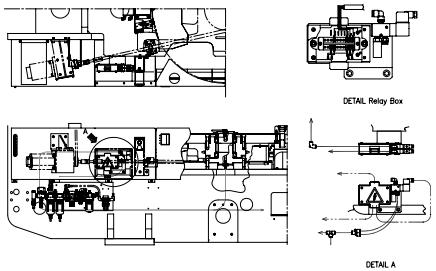

147 Floating Brush (Multi Tapping)(4)-1/2

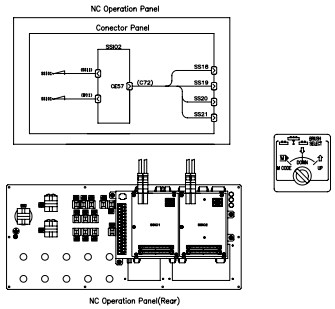

147 Floating Brush (Multi Tapping)(4)-2/2

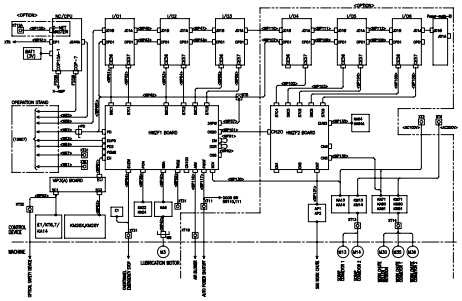

148 Multi Tapping(1)-1/7

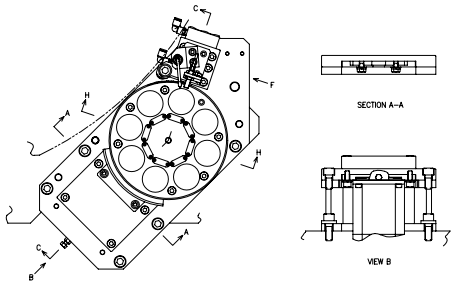

148 Multi Tapping(1)-2/7

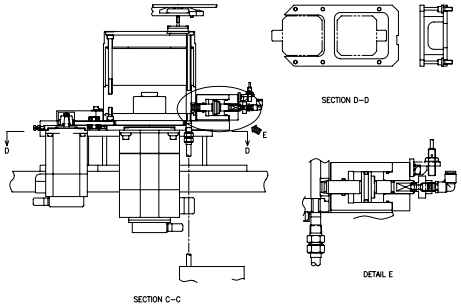

CONTENTS (26)

148	Multi Tapping(1)-3/7	148	Multi Tapping(1)-4/7	148	Multi Tapping(1)-5/7	148	Multi Tapping(1)-6/7
148	Multi Tapping(1)-7/7	149	Multi Tapping(2)-1/3	149	Multi Tapping(2)-2/3	149	Multi Tapping(2)-3/3
150	Multi Tapping(3)-1/3	150	Multi Tapping(3)-2/3	150	Multi Tapping(3)-3/3	151	Multi Tapping(4)

CONTENTS (27)

152	Multi Tapping(5)-1/4	152	Multi Tapping(5)-2/4	152	Multi Tapping(5)-3/4	152	Multi Tapping(5)-4/4
153	Multi Tapping(6)-1/2	153	Multi Tapping(6)-2/2	154	Multi Tapping(7)-1/2	154	Multi Tapping(7)-2/2
155	Multi Tapping(9)	156	Multi Tapping(10)-1/4	156	Multi Tapping(10)-2/4	156	Multi Tapping(10)-3/4

CONTENTS (28)

156	Multi Tapping(10)-4/4	157	Multi Tapping(11)-1/4	157	Multi Tapping(11)-2/4	157	Multi Tapping(11)-3/4
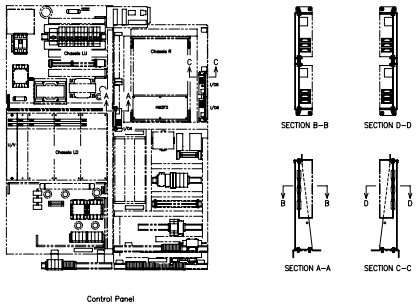		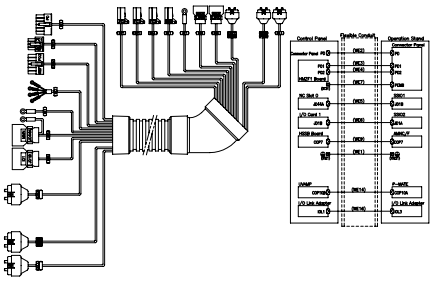		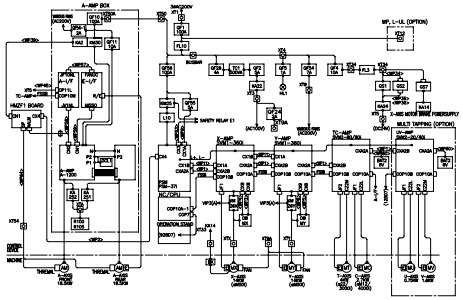		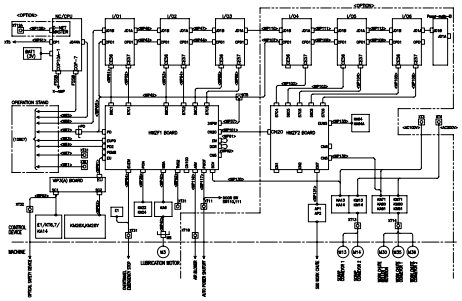	

157	Multi Tapping(11)-4/4	158	Memory Up	159	Power Vacuum(1)-1/2	159	Power Vacuum(1)-2/2
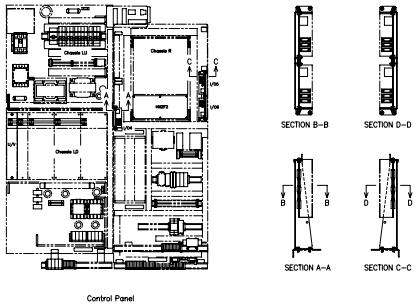		<List Only> 6703205 Tape Memory Length 640m 6703206 Tape Memory Length 1280m 6703207 Tape Memory Length 2560m		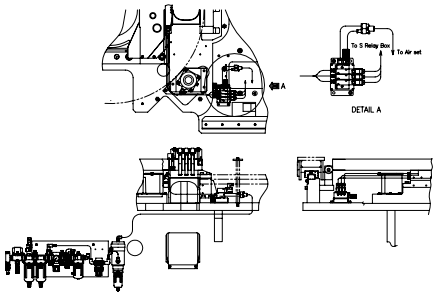		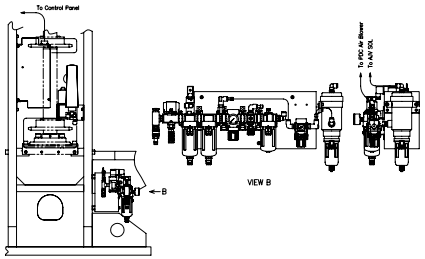	

160	Power Vacuum(2)	161	P&F(1)-1/2	161	P&F(1)-2/2	162	P&F(2)-1/3
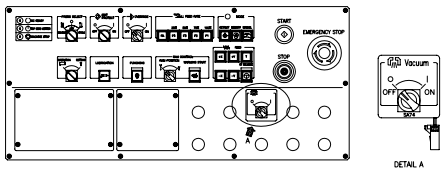		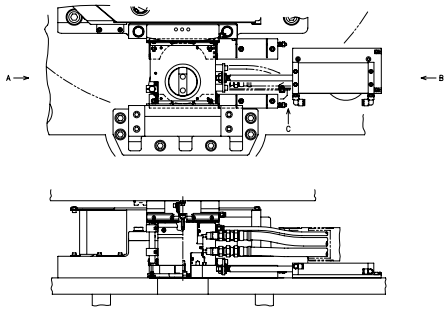		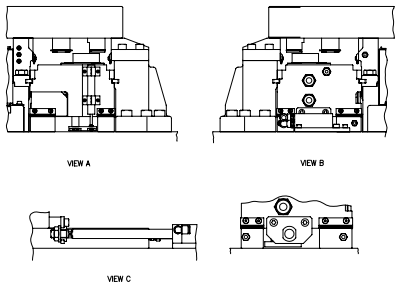		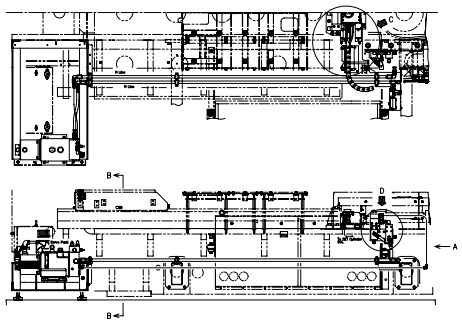	

CONTENTS (29)

162	P&F(2)-2/3	162	P&F(2)-3/3	163	P&F(3)-1/3	163	P&F(3)-2/3
163	P&F(3)-3/3	164	P&F(4)-1/2	164	P&F(4)-2/2	165	P&F(5)-1/3
165	P&F(5)-2/3	165	P&F(5)-3/3	166	P&F(6)	167	P&F(7)

CONTENTS (30)

168	P&F(8)-1/2	168	P&F(8)-2/2	169	P&F(9)	170	P&F(10)-1/2
170	P&F(10)-2/2	171	P&F(11)-1/2	171	P&F(11)-2/2	172	P&F(12)
173	P&F(13)	174	Jig (S)	175	Jig (L)	176	Loading Pneumatic Clamp-1/2

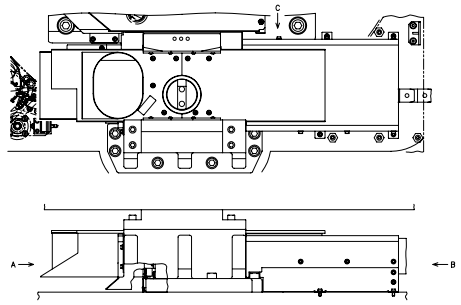

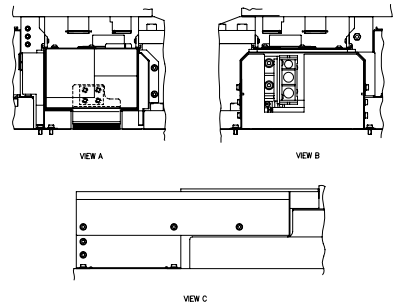

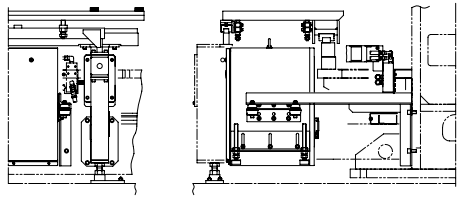

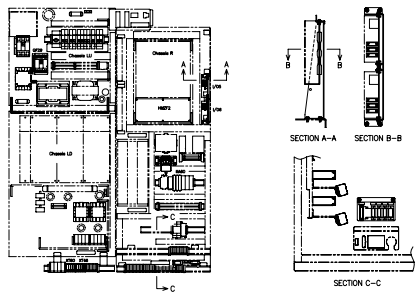

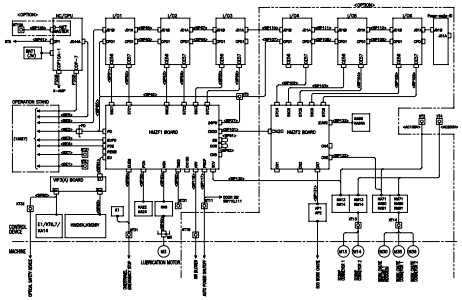

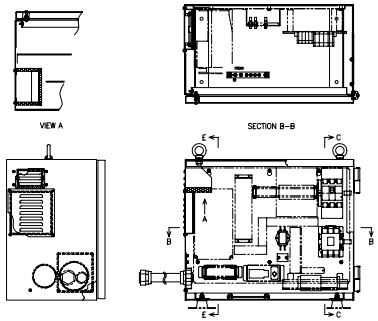

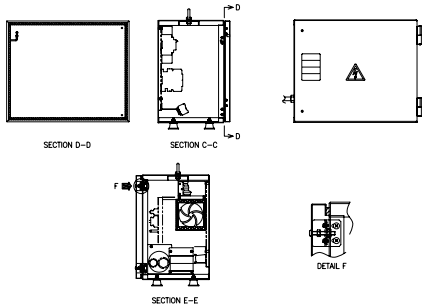

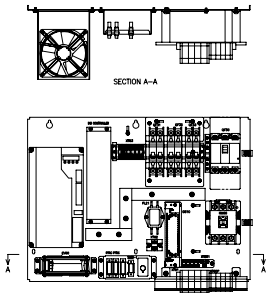

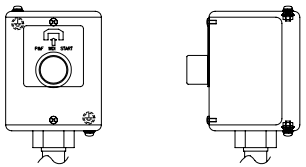

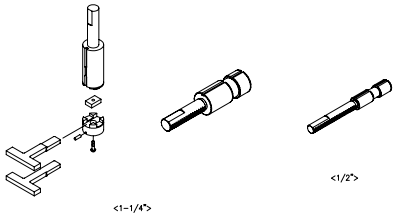

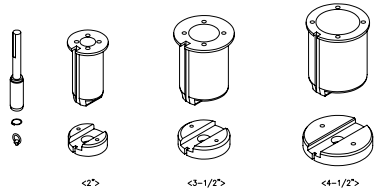

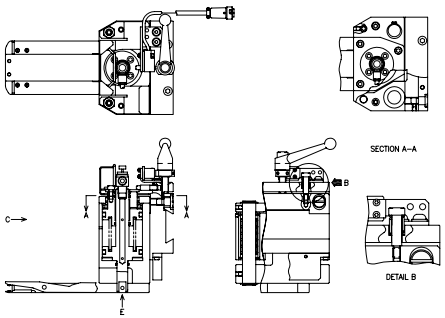

CONTENTS (31)

176	Loading Pneumatic Clamp-2/2	177	Hydraulic Clamp(1)-1/2	177	Hydraulic Clamp(1)-2/2	178	Hydraulic Clamp(2)-1/2
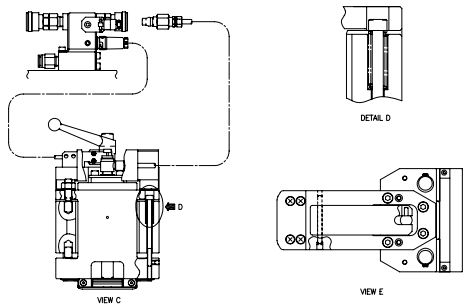		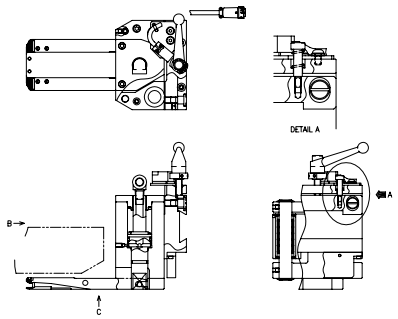		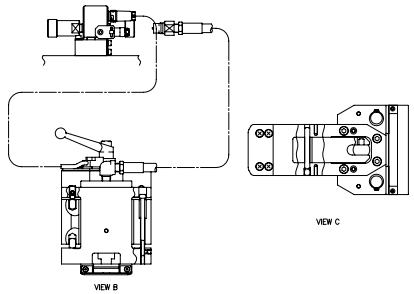		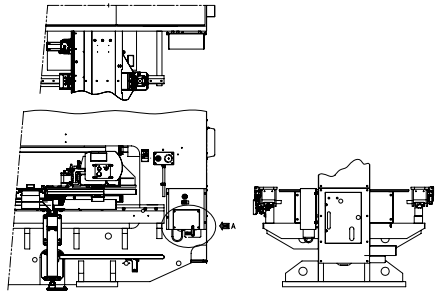	
178	Hydraulic Clamp(2)-2/2	179	Hydraulic Clamp(3)-1/2	179	Hydraulic Clamp(3)-2/2	180	Loading Hydraulic Clamp-1/2
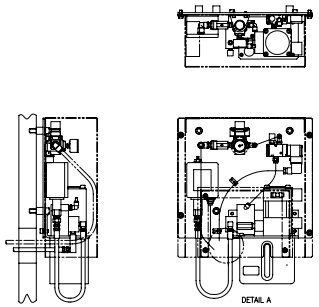		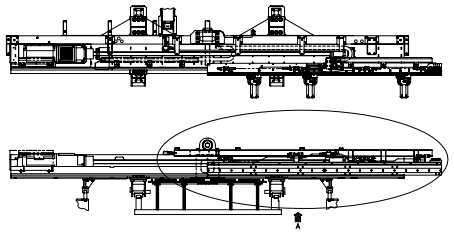		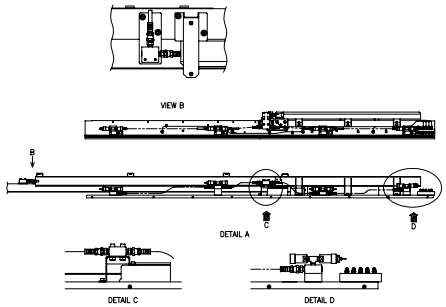		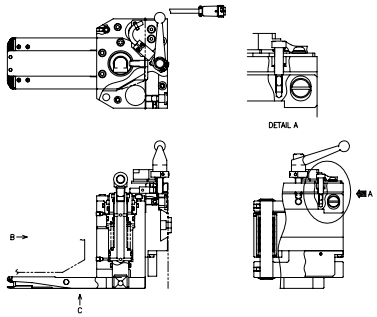	
180	Loading Hydraulic Clamp-2/2	181	Pass Line (AY Plate)-1/3	181	Pass Line (AY Plate)-2/3	181	Pass Line (AY Plate)-3/3
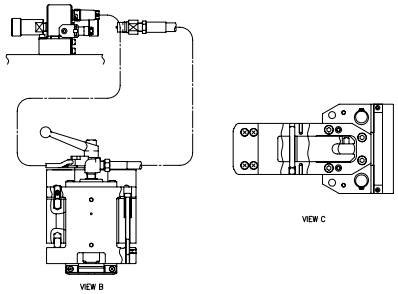		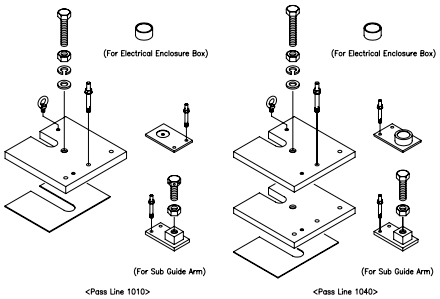		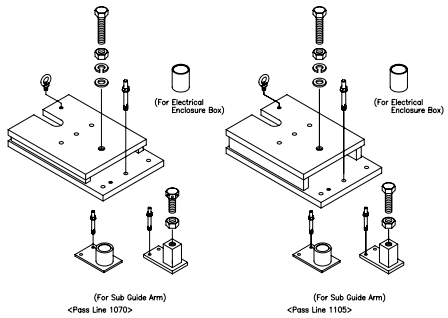		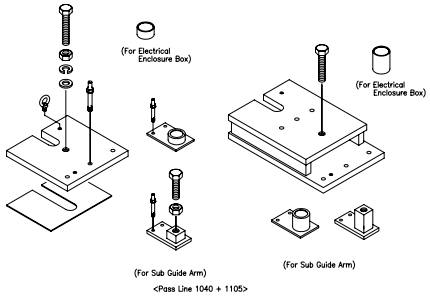	

CONTENTS (32)

182	Pass Line (J Anchor)-1/3	182	Pass Line (J Anchor)-2/3	182	Pass Line (J Anchor)-3/3	183	MP-C(1)-1/4
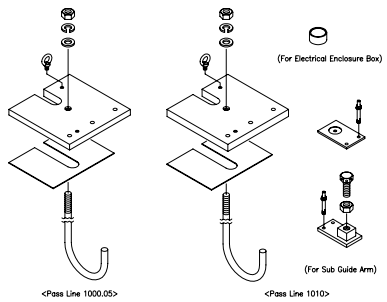		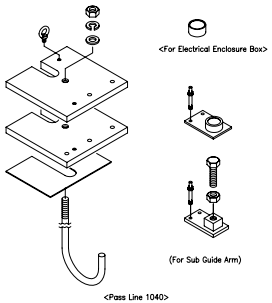		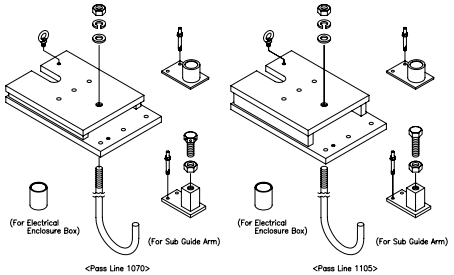		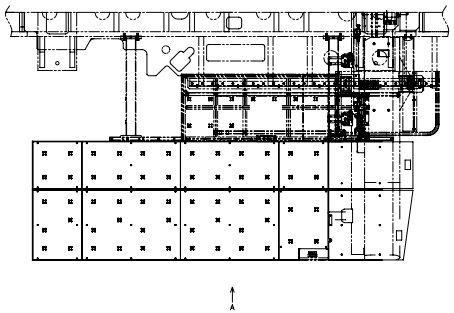	
183	MP-C(1)-2/4	183	MP-C(1)-3/4	183	MP-C(1)-4/4	184	MP-C(2)-1/3
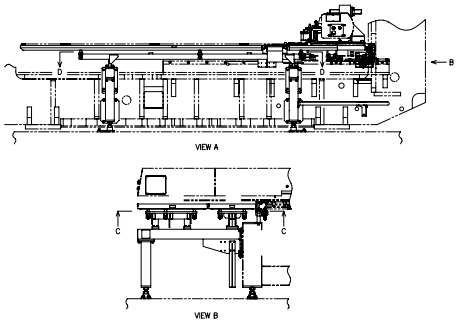		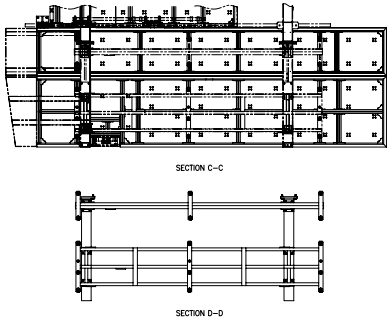		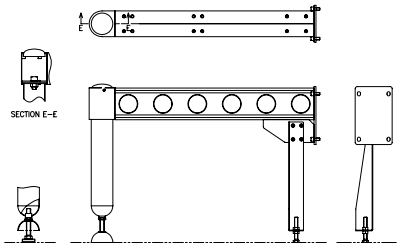		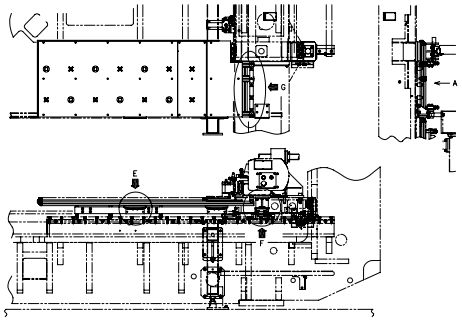	
184	MP-C(2)-2/3	184	MP-C(2)-3/3	185	MP-C(3)-1/3	185	MP-C(3)-2/3
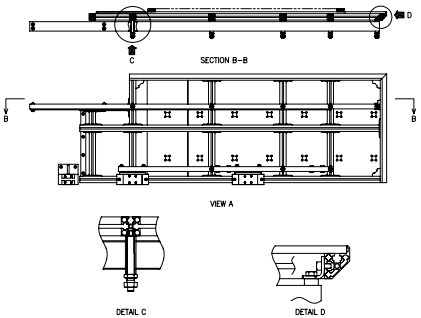		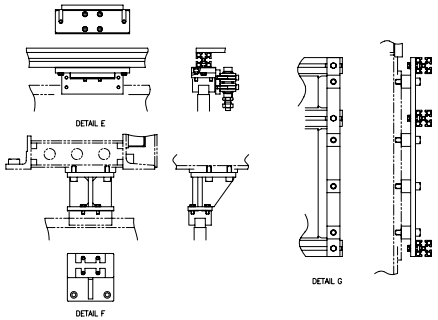		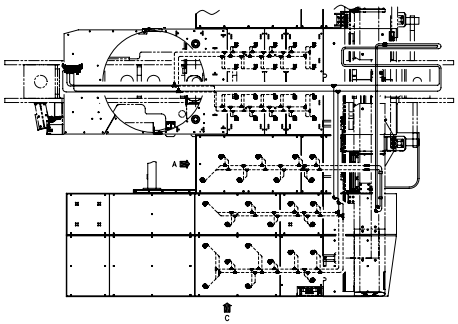		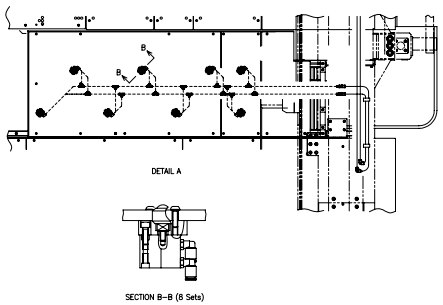	

CONTENTS (33)

185	MP-C(3)-3/3	186	MP-C(4)	187	MP-C(5)	188	MP-C(6)
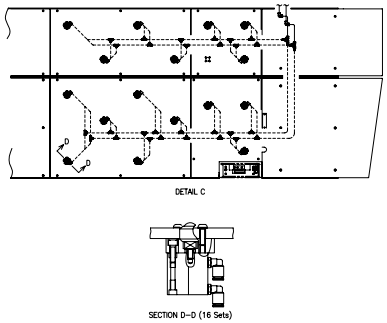		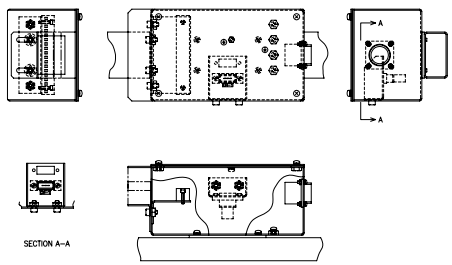		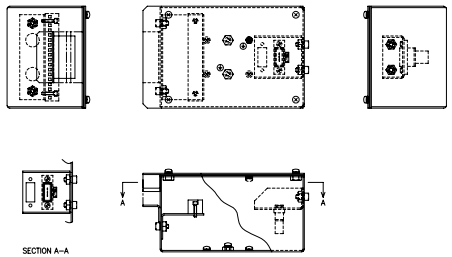		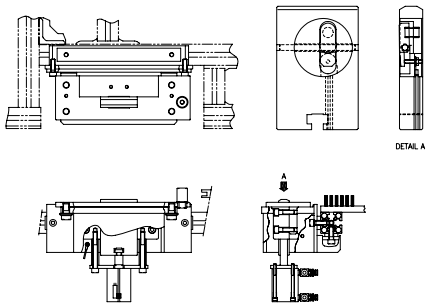	
189	MP-C(7)	190	MP-C(8)	191	MP-C(9)	192	MP-C(10)
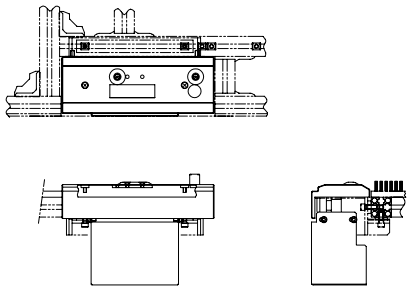		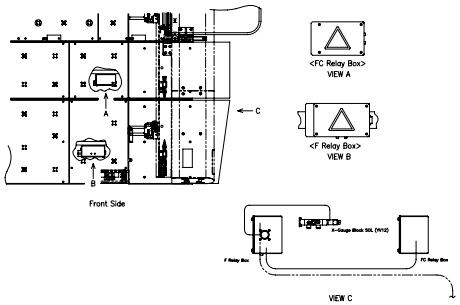		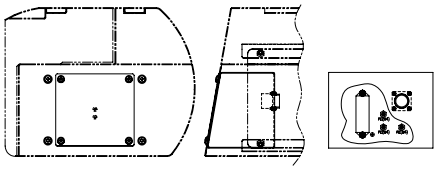		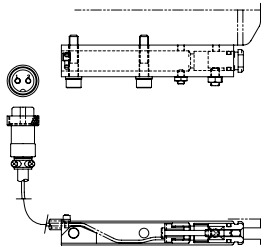	
193	MP-C(11)	194	MP-C(12)	195	MP-C(13)-1/2	195	MP-C(13)-2/2
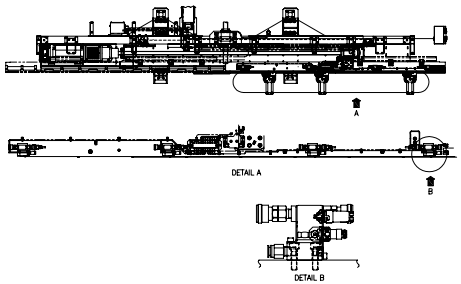		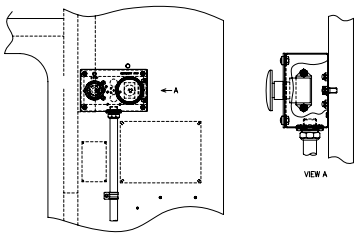		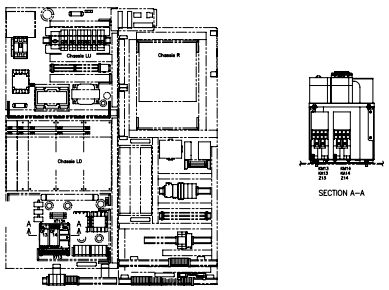		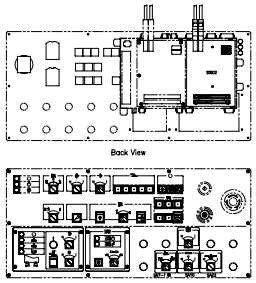	

CONTENTS (34)

196	RMP-C(1)-1/2	196	RMP-C(1)-2/2	197	RMP-C(2)-1/7	197	RMP-C(2)-2/7
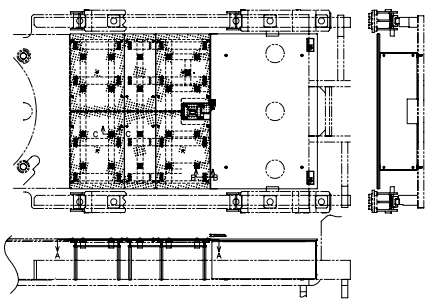		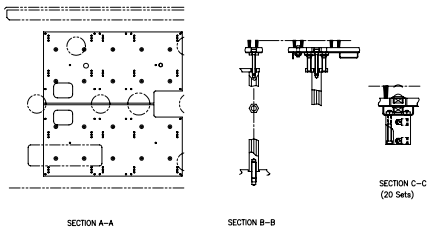		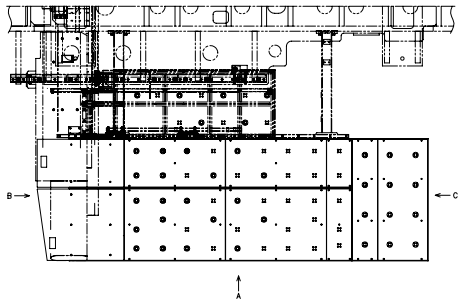		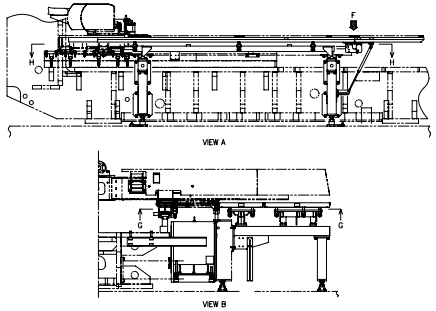	
197	RMP-C(2)-3/7	197	RMP-C(2)-4/7	197	RMP-C(2)-5/7	197	RMP-C(2)-6/7
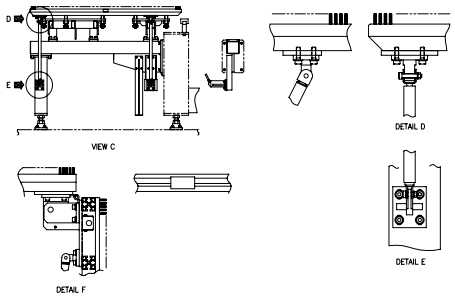		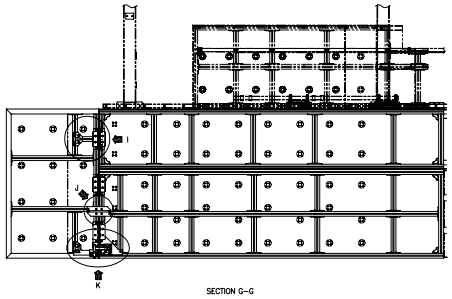		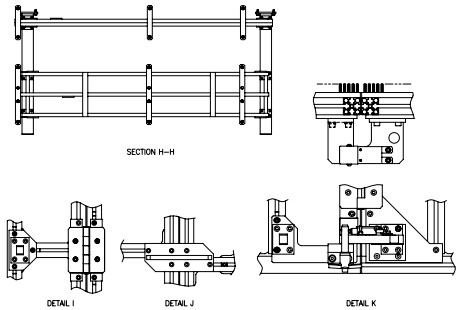		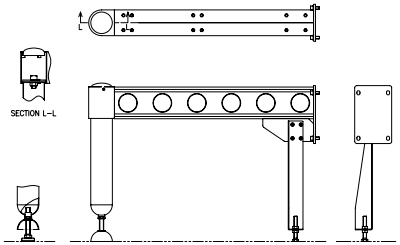	
197	RMP-C(2)-7/7	198	RMP-C(3)-1/3	198	RMP-C(3)-2/3	198	RMP-C(3)-3/3
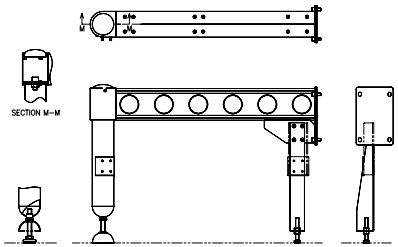		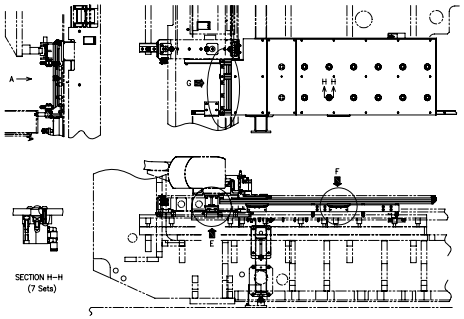		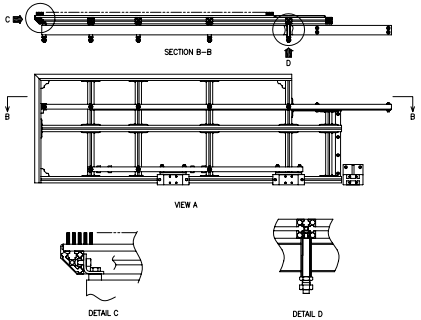		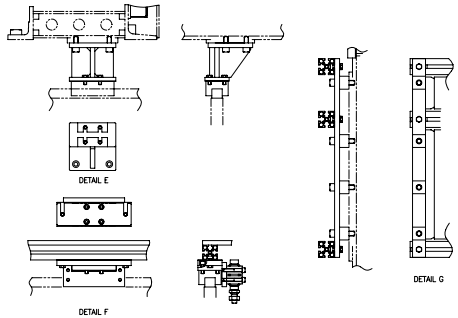	

CONTENTS (35)

199	RMP-C(4)-1/4	199	RMP-C(4)-2/4	199	RMP-C(4)-3/4	199	RMP-C(4)-4/4
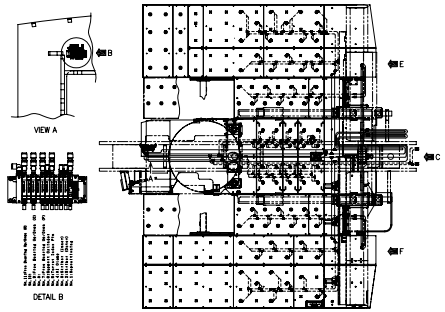		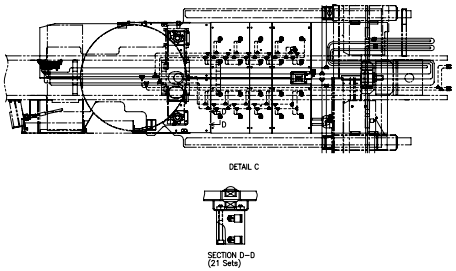		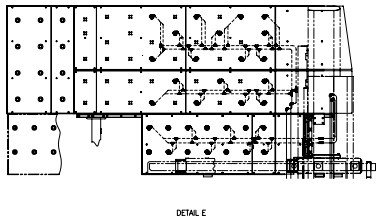		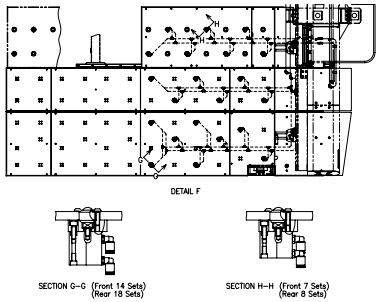	
200	RMP-C(5)	201	RMP-C(6)	202	RMP-C(7)	203	RMP-C(8)
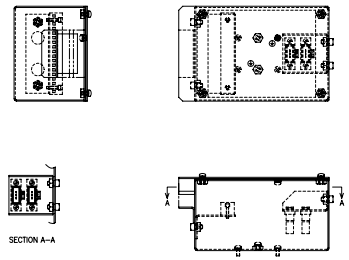		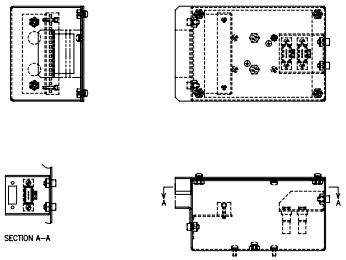		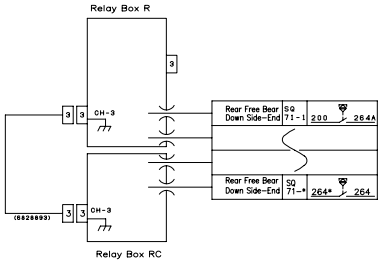		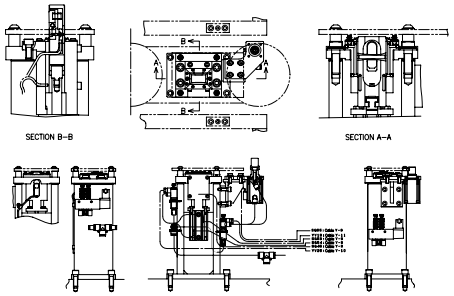	
204	RMP-C(9)-1/2	204	RMP-C(9)-2/2	205	RMP-C(10)	206	RMP-C(11)
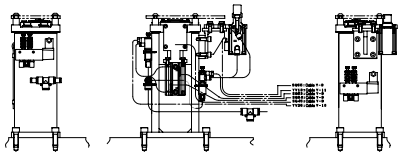		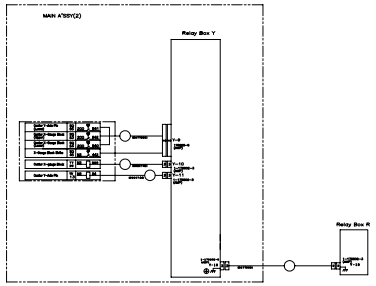		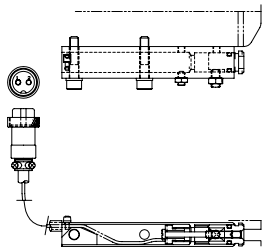		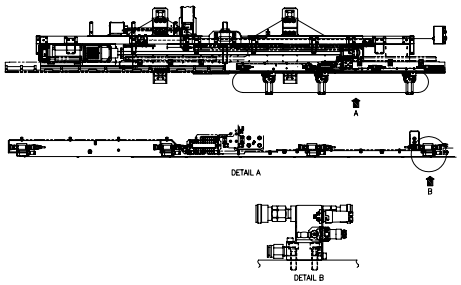	

CONTENTS (36)

207	RMP-C(12)	208	RMP-C(13)	209	RMP-C(14)	210	RMP-C(15)
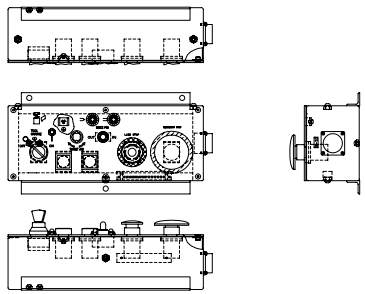		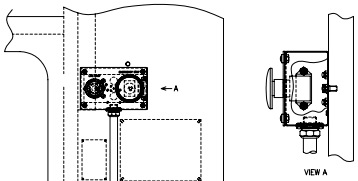		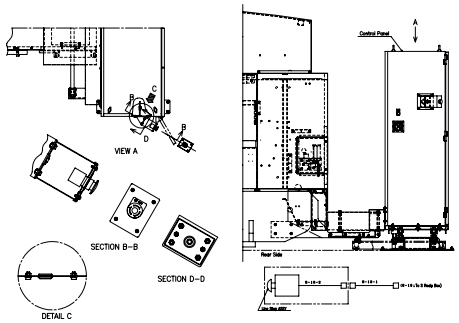		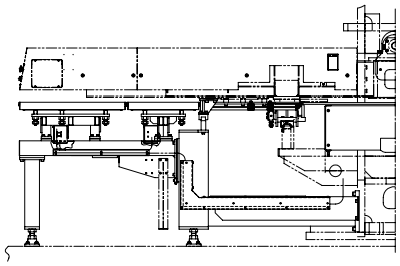	
211	RMP-C(16)-1/2	211	RMP-C(16)-2/2	212	RMP-C(17)	213	RMP-C(18)
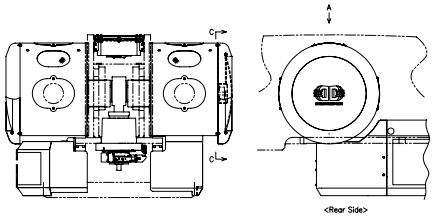		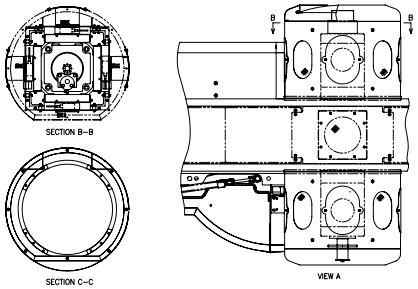		<List Only> 6703029 FANUC (RMP)		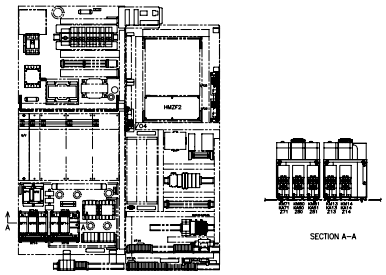	
214	RMP-C(19)	215	RMP-C(20)	216	RMP-C(21)	217	OL-C(1)-1/4
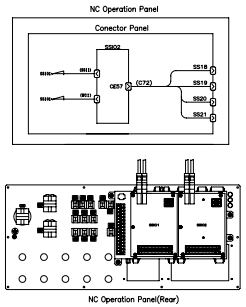		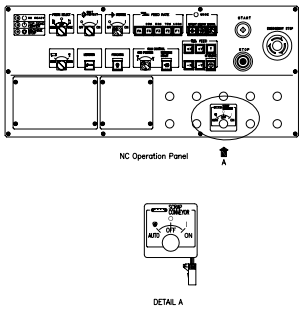		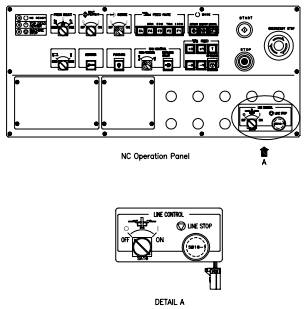		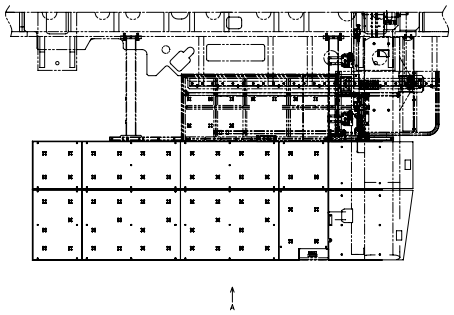	

CONTENTS (37)

217	OL-C(1)-2/4	217	OL-C(1)-3/4	217	OL-C(1)-4/4	218	OL-C(2)-1/3
218	OL-C(2)-2/3	218	OL-C(2)-3/3	219	OL-C(3)-1/3	219	OL-C(3)-2/3
219	OL-C(3)-3/3	220	OL-C(4)	221	OL-C(5)	222	OL-C(6)

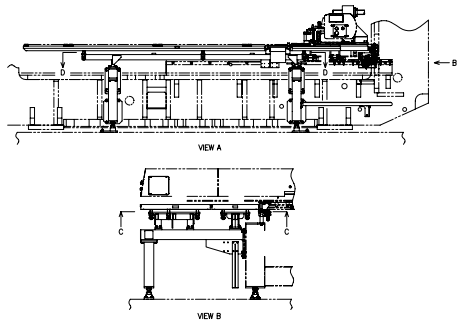

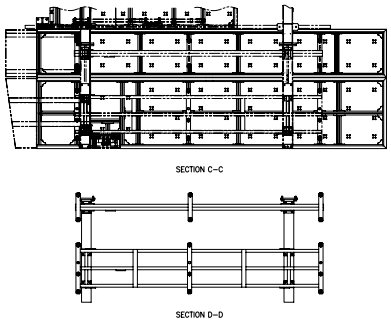

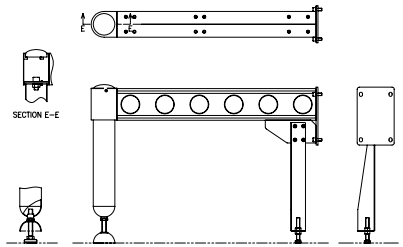

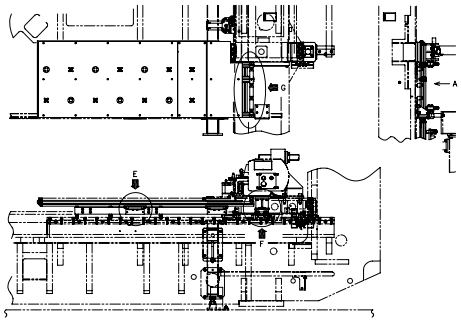

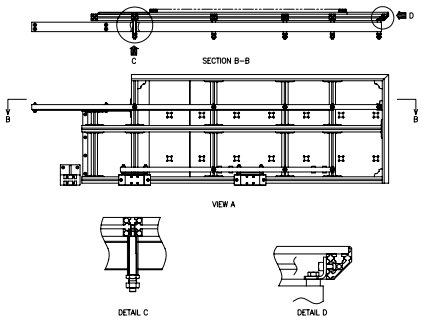

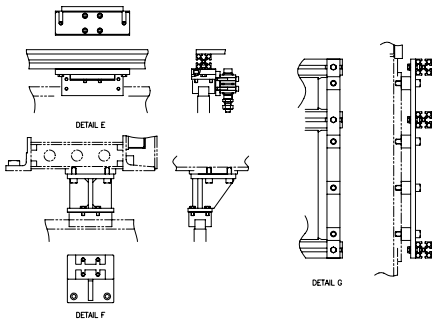

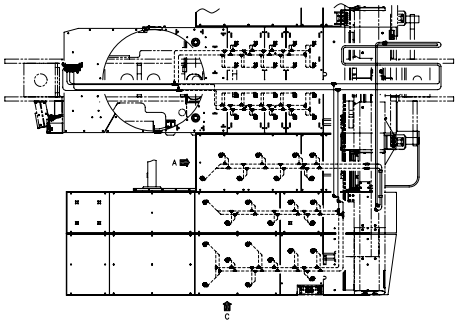

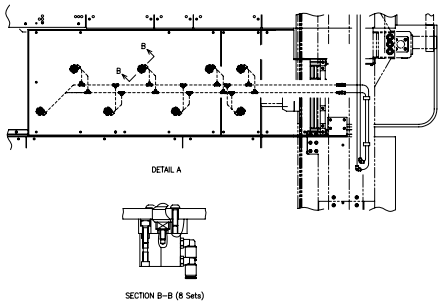

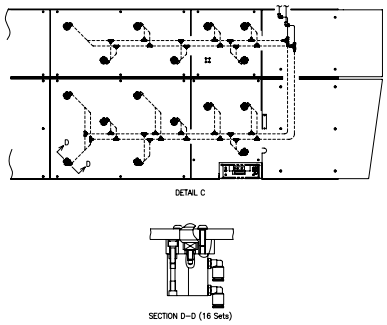

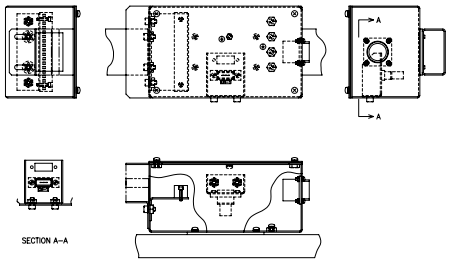

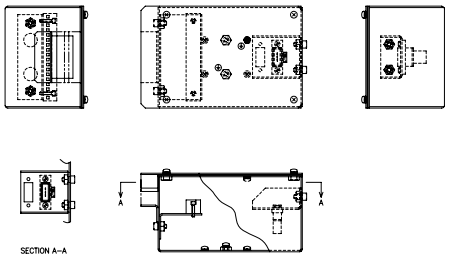

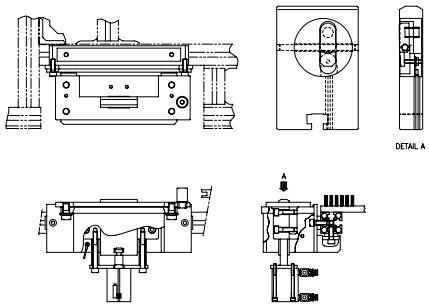

CONTENTS (38)

223	OL-C(7)	224	OL-C(8)	225	OL-C(9)-1/7	225	OL-C(9)-2/7
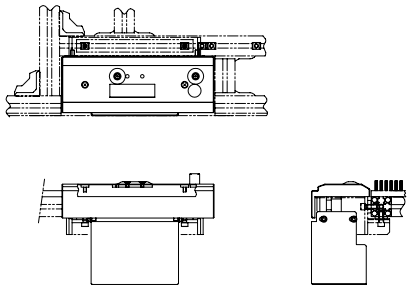		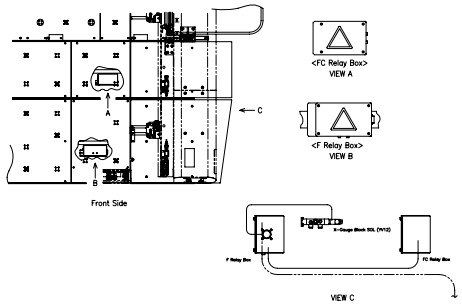		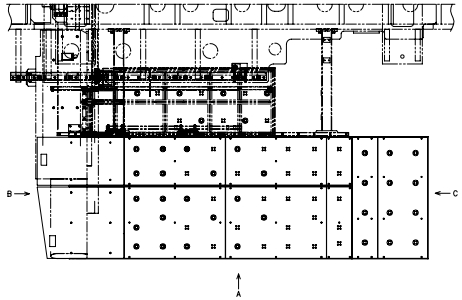		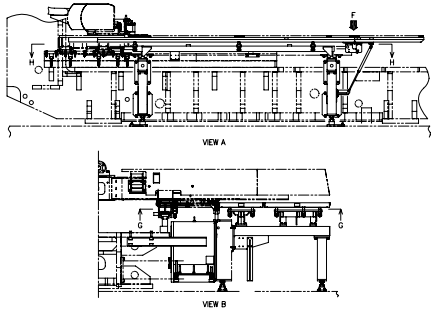	
225	OL-C(9)-3/7	225	OL-C(9)-4/7	225	OL-C(9)-5/7	225	OL-C(9)-6/7
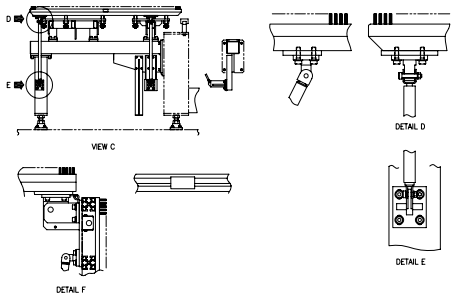		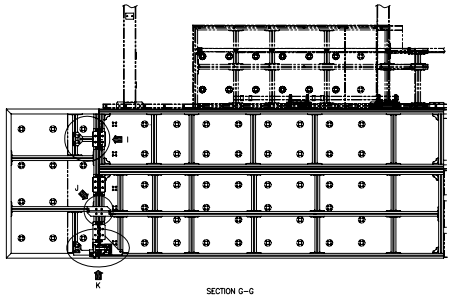		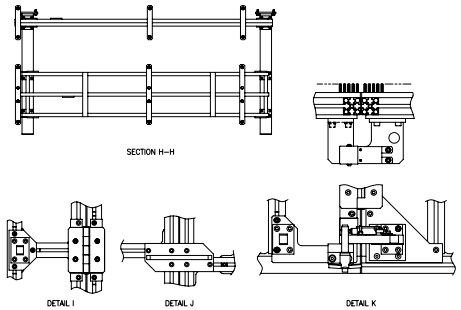		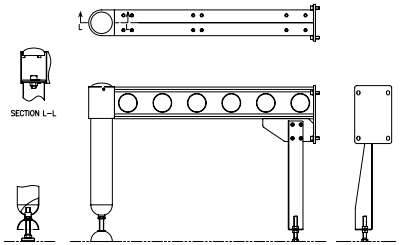	
225	OL-C(9)-7/7	226	OL-C(10)-1/3	226	OL-C(10)-2/3	226	OL-C(10)-3/3
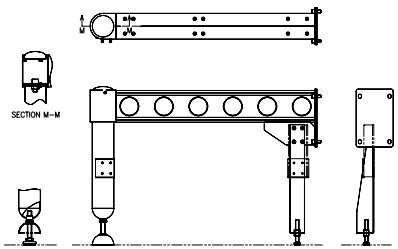		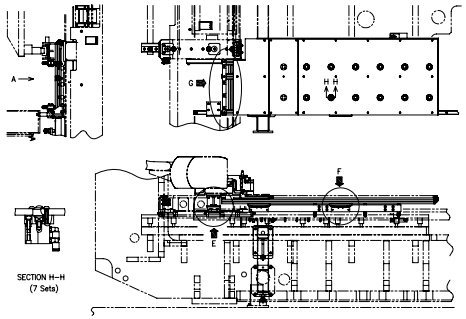		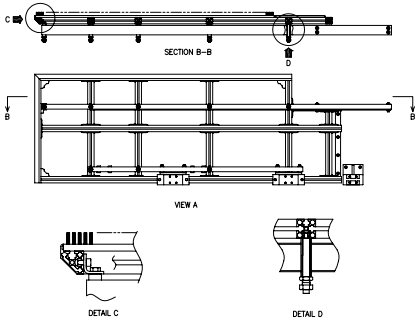		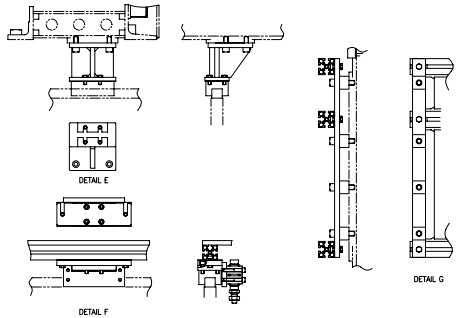	

CONTENTS (39)

227	OL-C(11)-1/4	227	OL-C(11)-2/4	227	OL-C(11)-3/4	227	OL-C(11)-4/4
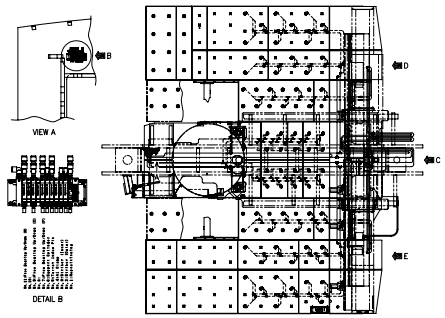		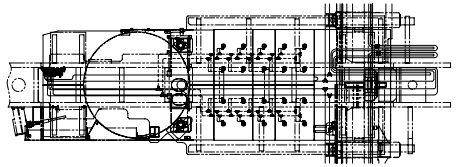		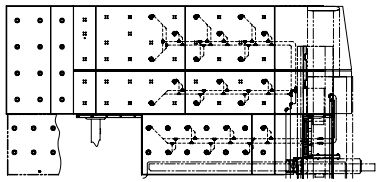		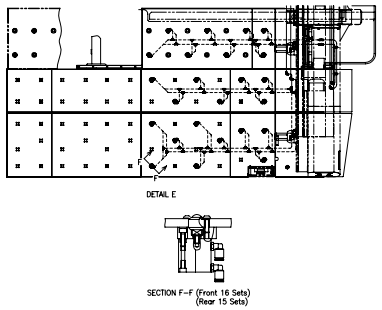	

228	OL-C(12)-1/2	228	OL-C(12)-2/2	229	OL-C(13)	230	OL-C(14)
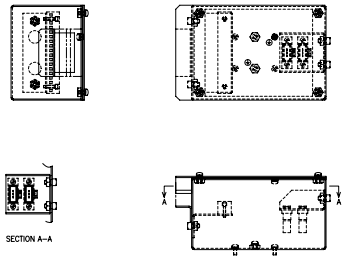		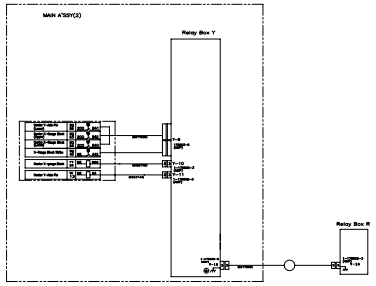		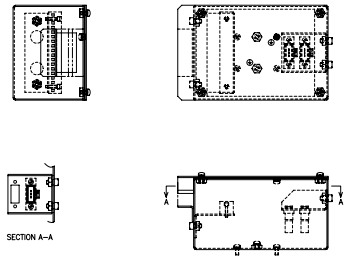		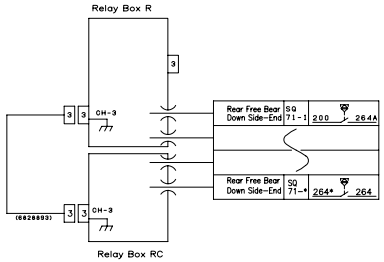	

231	OL-C(15)	232	OL-C(16)	233	OL-C(17)	234	OL-C(18)
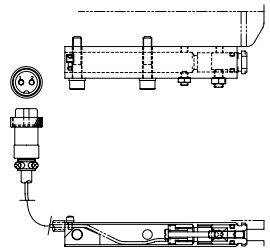		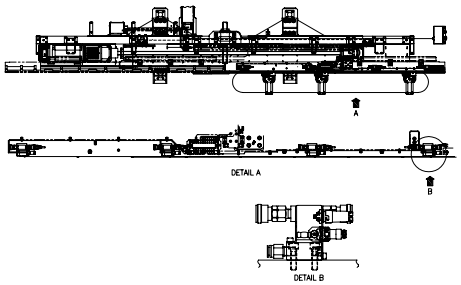		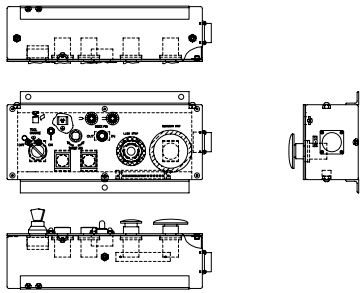		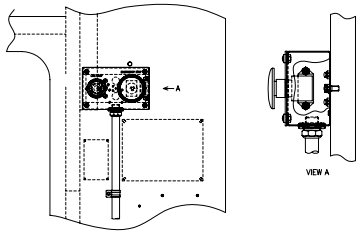	

CONTENTS (40)

235	OL-C(19)	236	OL-C(20)	237	OL-C(21)	238	OL-C(22)-1/2
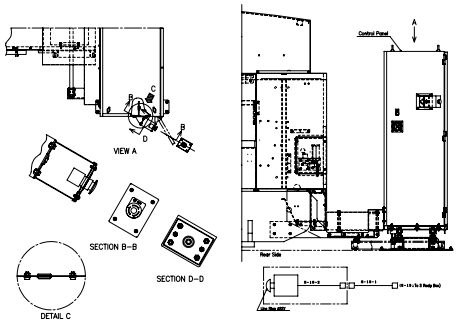		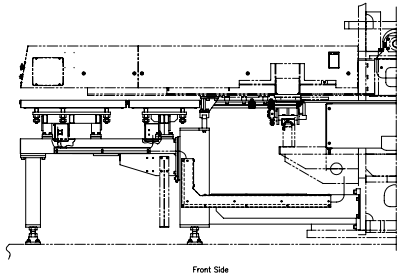		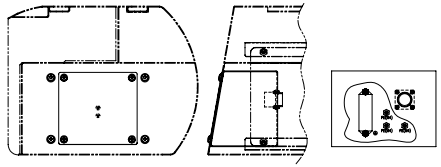		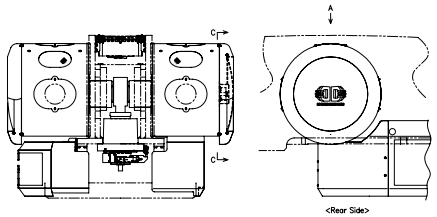	
238	OL-C(22)-2/2	239	US Line (CR)-C(1)-1/4	239	US Line (CR)-C(1)-2/4	239	US Line (CR)-C(1)-3/4
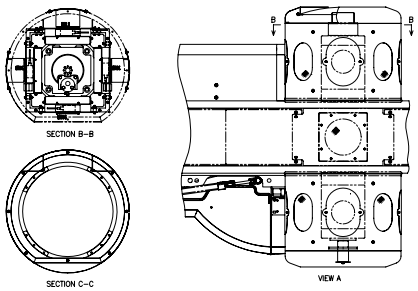		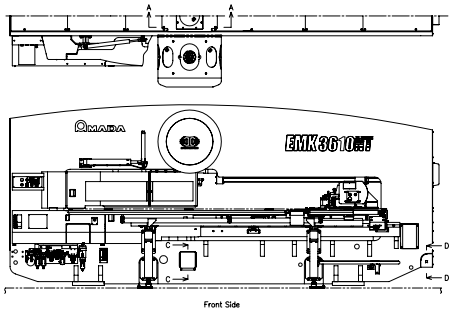		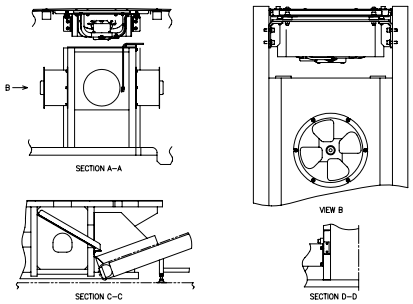		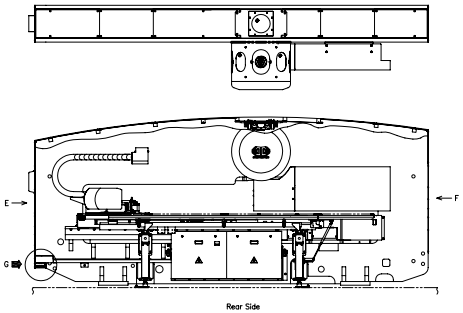	
239	US Line (CR)-C(1)-4/4	240	US Line (CR)-C(2)	241	US Line (CR)-C(3)-1/4	241	US Line (CR)-C(3)-2/4
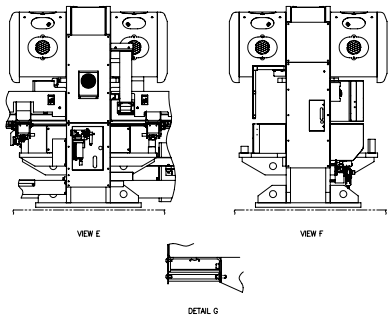		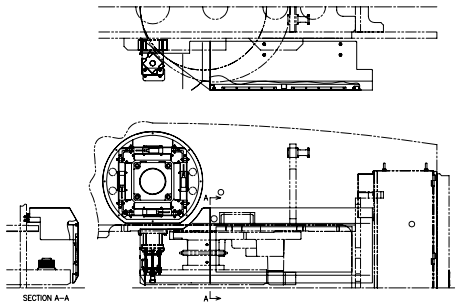		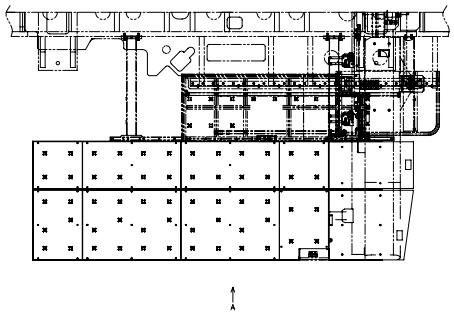		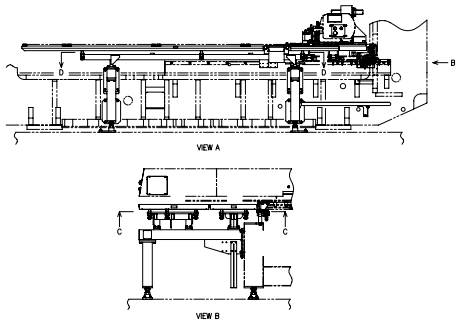	

CONTENTS (41)

241	US Line (CR)-C(3)-3/4	241	US Line (CR)-C(3)-4/4	242	US Line (CR)-C(4)-1/3	242	US Line (CR)-C(4)-2/3
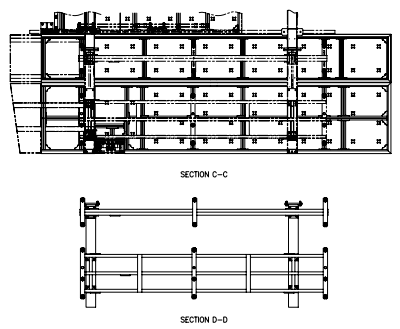		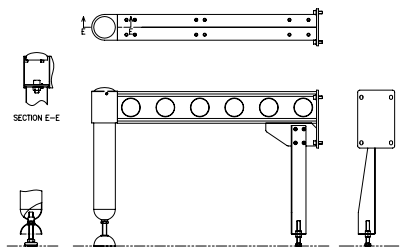		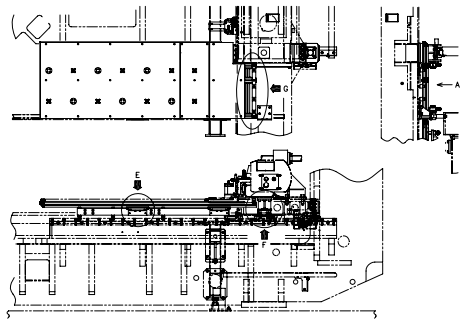		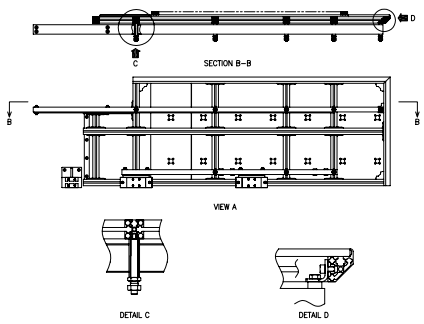	
242	US Line (CR)-C(4)-3/3	243	US Line (CR)-C(5)-1/3	243	US Line (CR)-C(5)-2/3	243	US Line (CR)-C(5)-3/3
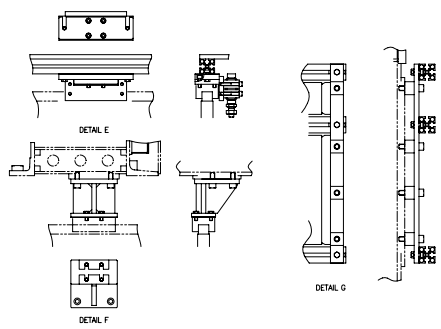		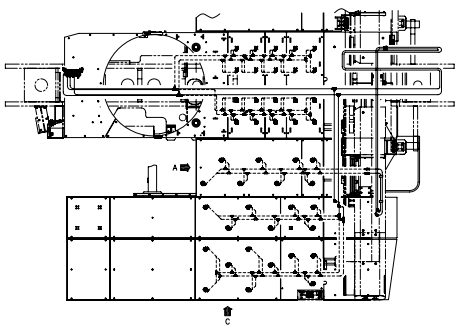		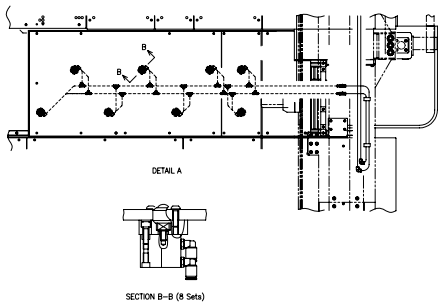		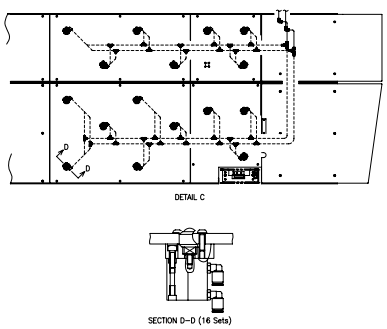	
244	US Line (CR)-C(6)	245	US Line (CR)-C(7)	246	US Line (CR)-C(8)	247	US Line (CR)-C(9)
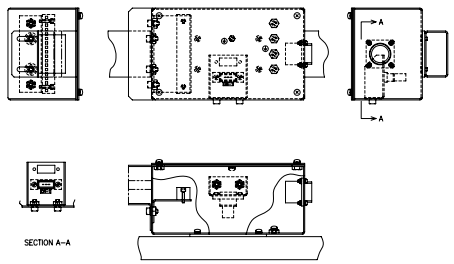		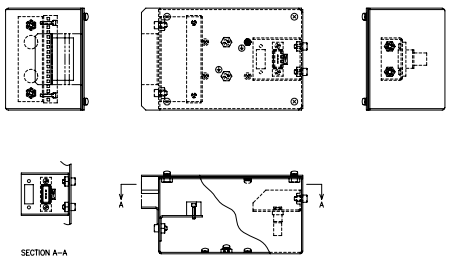		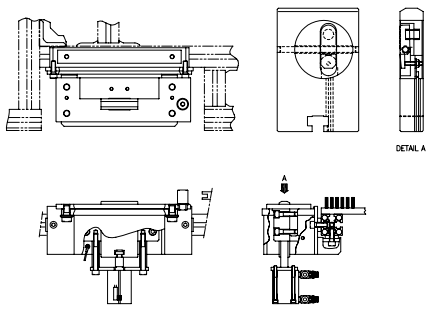		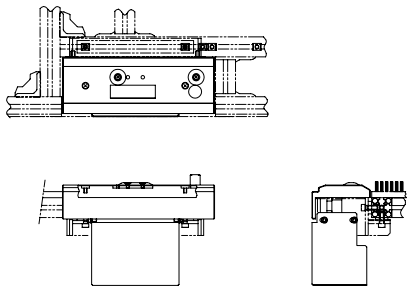	

CONTENTS (42)

248	US Line (CR)-C(10)	249	US Line (CR)-C(11)-1/2	249	US Line (CR)-C(11)-2/2	250	US Line (CR)-C(12)-1/7
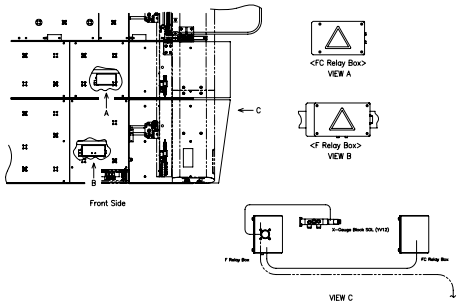		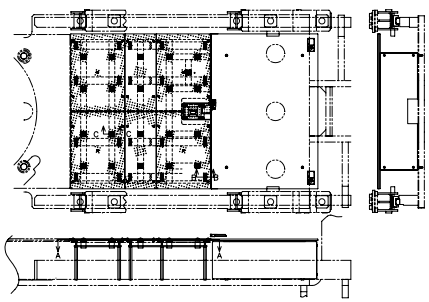		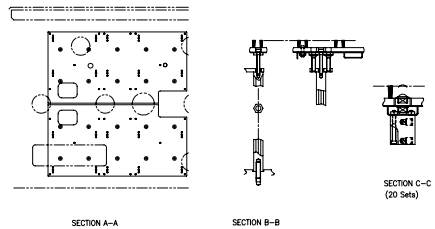		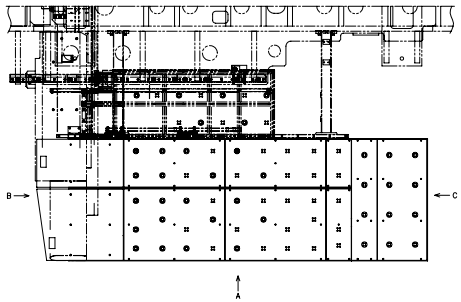	
250	US Line (CR)-C(12)-2/7	250	US Line (CR)-C(12)-3/7	250	US Line (CR)-C(12)-4/7	250	US Line (CR)-C(12)-5/7
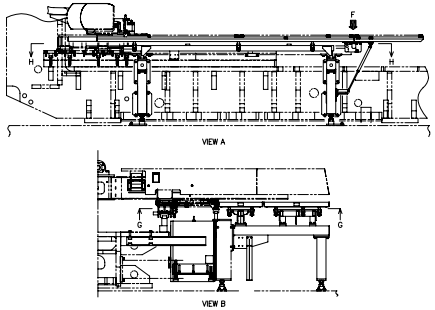		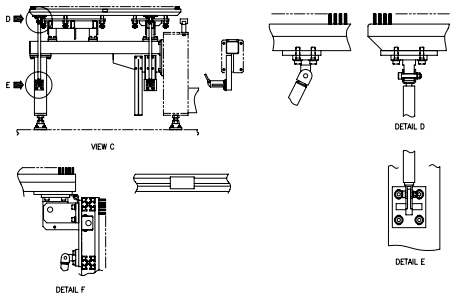		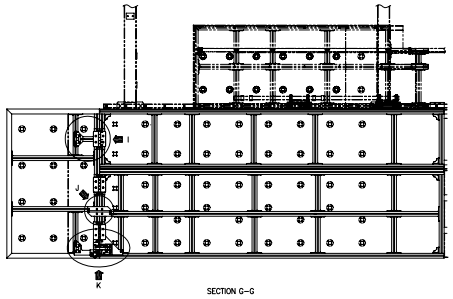		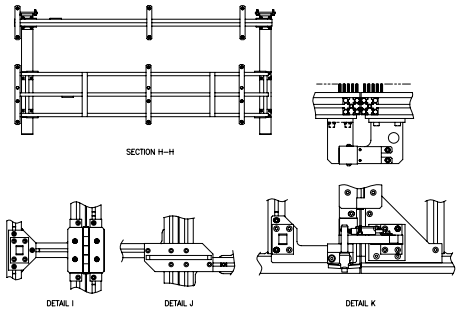	
250	US Line (CR)-C(12)-6/7	250	US Line (CR)-C(12)-7/7	251	US Line (CR)-C(13)-1/3	251	US Line (CR)-C(13)-2/3
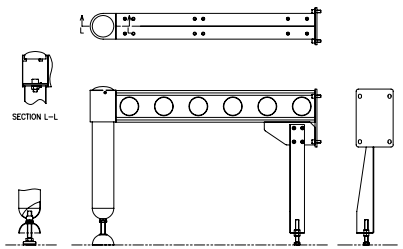		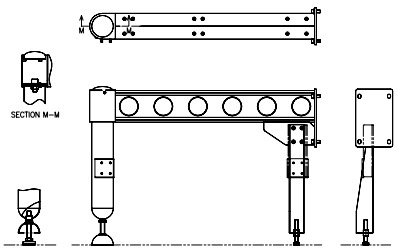		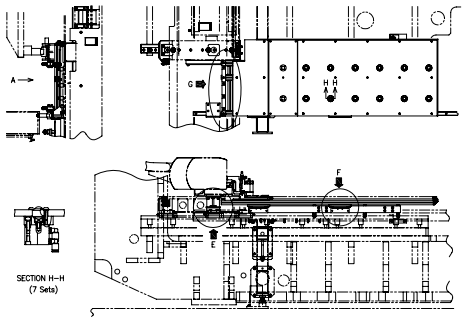		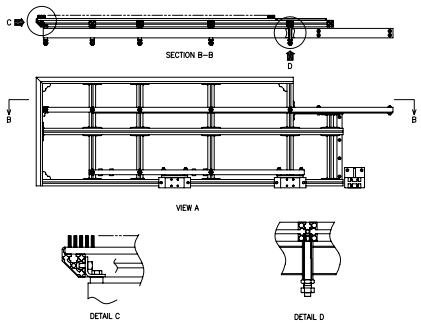	

CONTENTS (43)

251	US Line (CR)-C(13)-3/3	252	US Line (CR)-C(14)-1/6	252	US Line (CR)-C(14)-2/6	252	US Line (CR)-C(14)-3/6
252	US Line (CR)-C(14)-4/6	252	US Line (CR)-C(14)-5/6	252	US Line (CR)-C(14)-6/6	253	US Line (CR)-C(15)-1/2
253	US Line (CR)-C(15)-2/2	254	US Line (CR)-C(16)	255	US Line (CR)-C(17)	256	US Line (CR)-C(18)

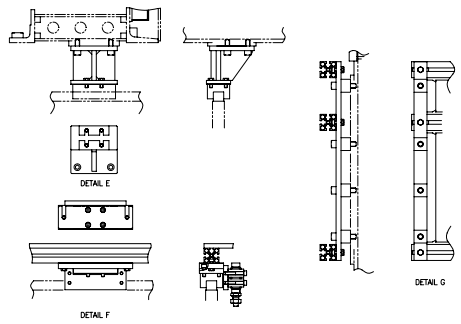

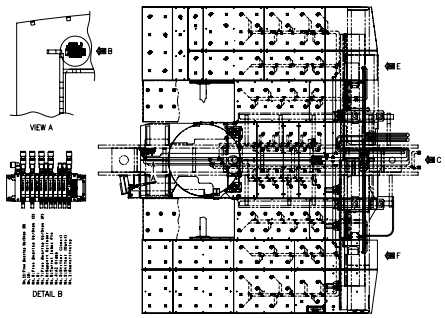

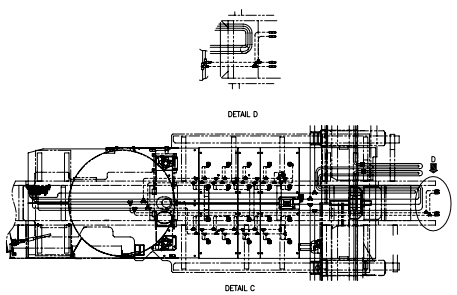

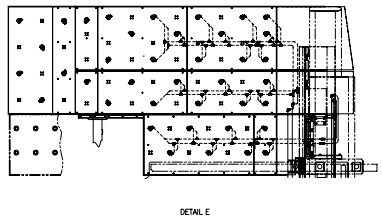

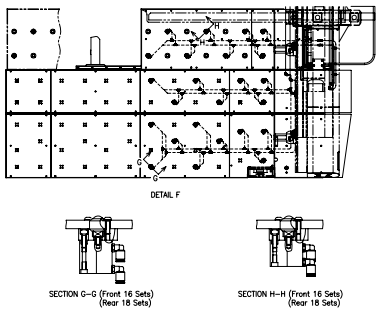

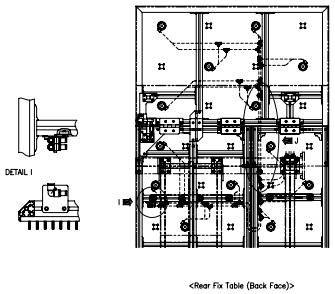

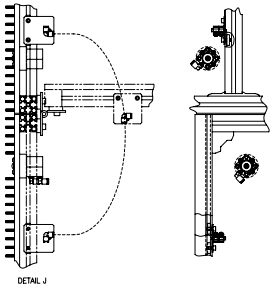

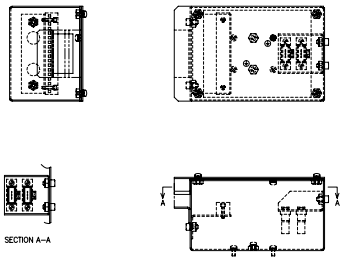

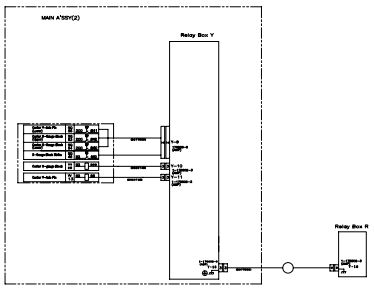

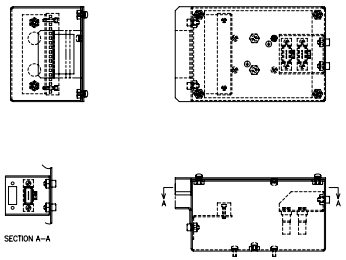

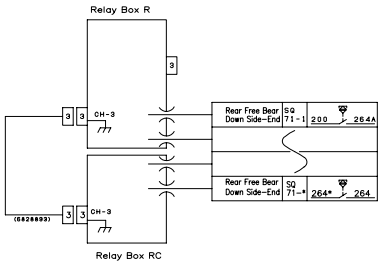

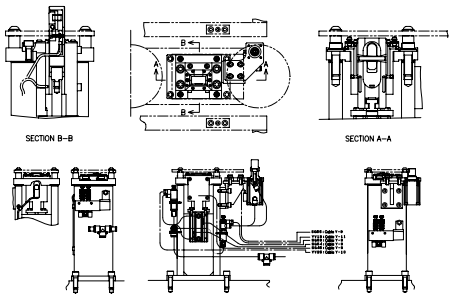

CONTENTS (44)

257	US Line (CR)-C(19)-1/2	257	US Line (CR)-C(19)-2/2	258	US Line (CR)-C(20)	259	US Line (CR)-C(21)
260	US Line (CR)-C(22)-1/7	260	US Line (CR)-C(22)-2/7	260	US Line (CR)-C(22)-3/7	260	US Line (CR)-C(22)-4/7
260	US Line (CR)-C(22)-5/7	260	US Line (CR)-C(22)-6/7	260	US Line (CR)-C(22)-7/7	261	US Line (CR)-C(23)

CONTENTS (45)

262	US Line (CR)-C(24)	263	US Line (CR)-C(25)	264	US Line (CR)-C(26)	265	US Line (CR)-C(27)
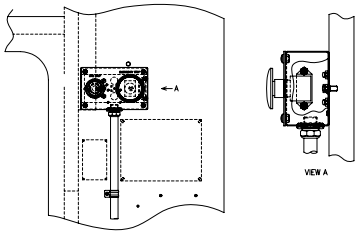		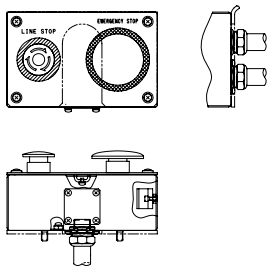		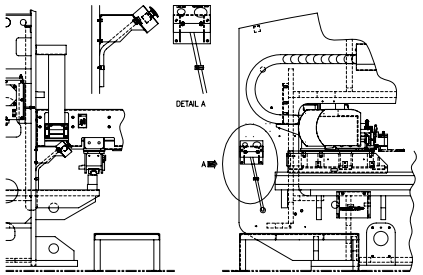		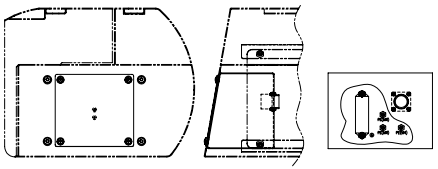	
266	US Line (CR)-C(28)	267	US Line (CR)-C(29)-1/4	267	US Line (CR)-C(29)-2/4	267	US Line (CR)-C(29)-3/4
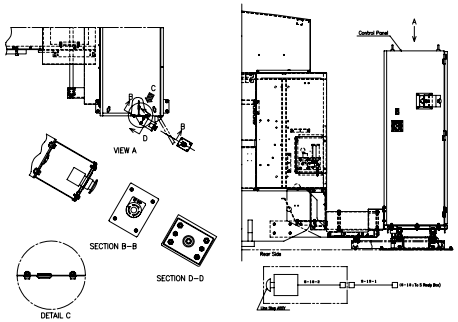		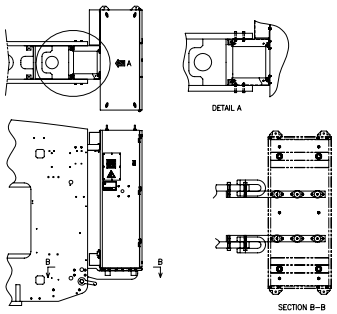		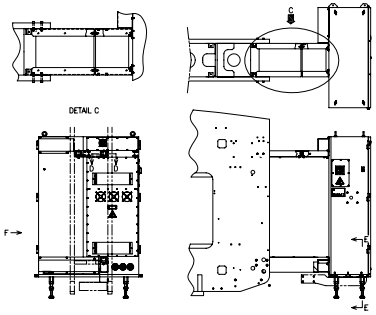		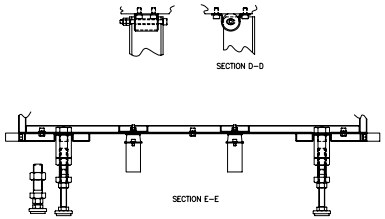	
267	US Line (CR)-C(29)-4/4	268	US Line (CR)-C(30)-1/2	268	US Line (CR)-C(30)-2/2	269	US Line (CR)-C(31)
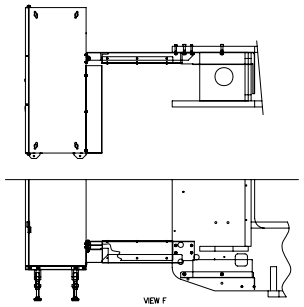		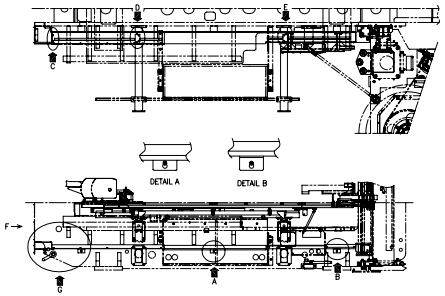		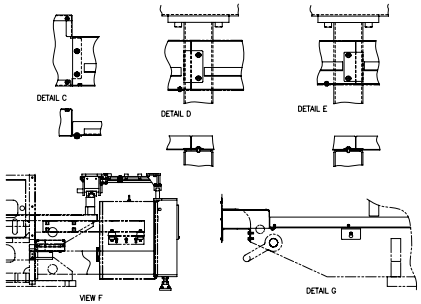		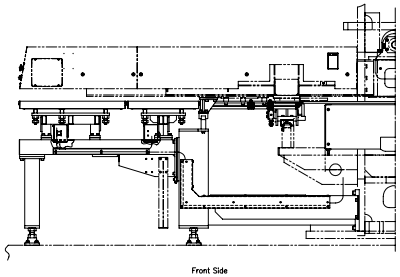	

CONTENTS (46)

270	US Line (CR)-C(32)-1/2	270	US Line (CR)-C(32)-2/2	271	US Line (CR)-C(33)	272	US Line (CR)-C(34)
273	US Line (CR)-C(35)	274	US Line (CR)-C(36)	275	US Line (CR)-C(37)	276	US Line (CR)-C(38)
277	US Line (CR)-C(39)	278	US Line (CR)-C(40)-1/2	278	US Line (CR)-C(40)-2/2		

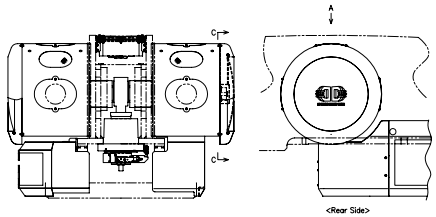

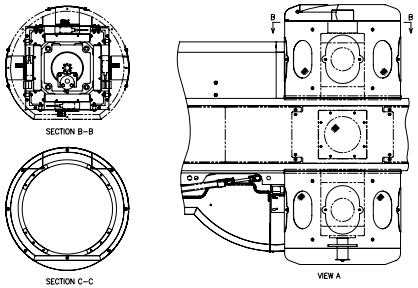

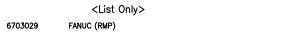

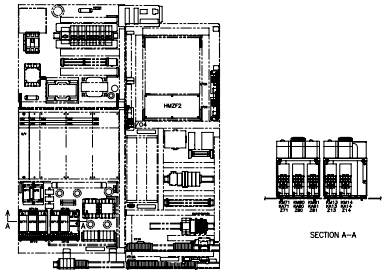

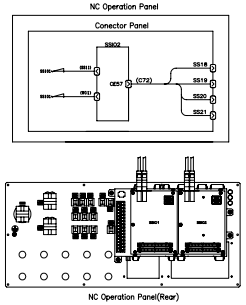

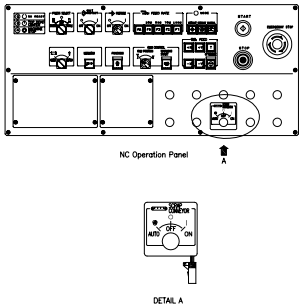

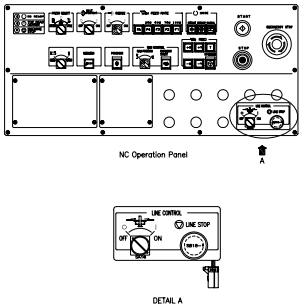

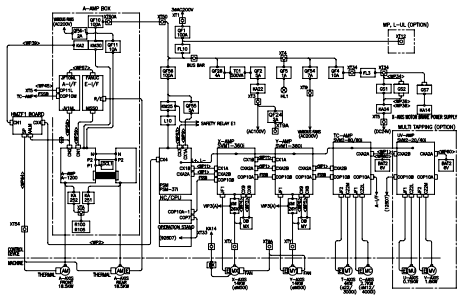

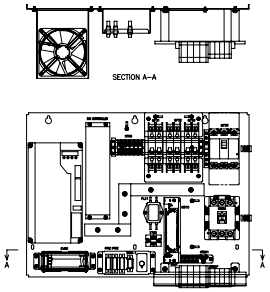

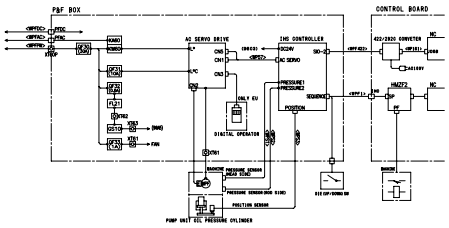

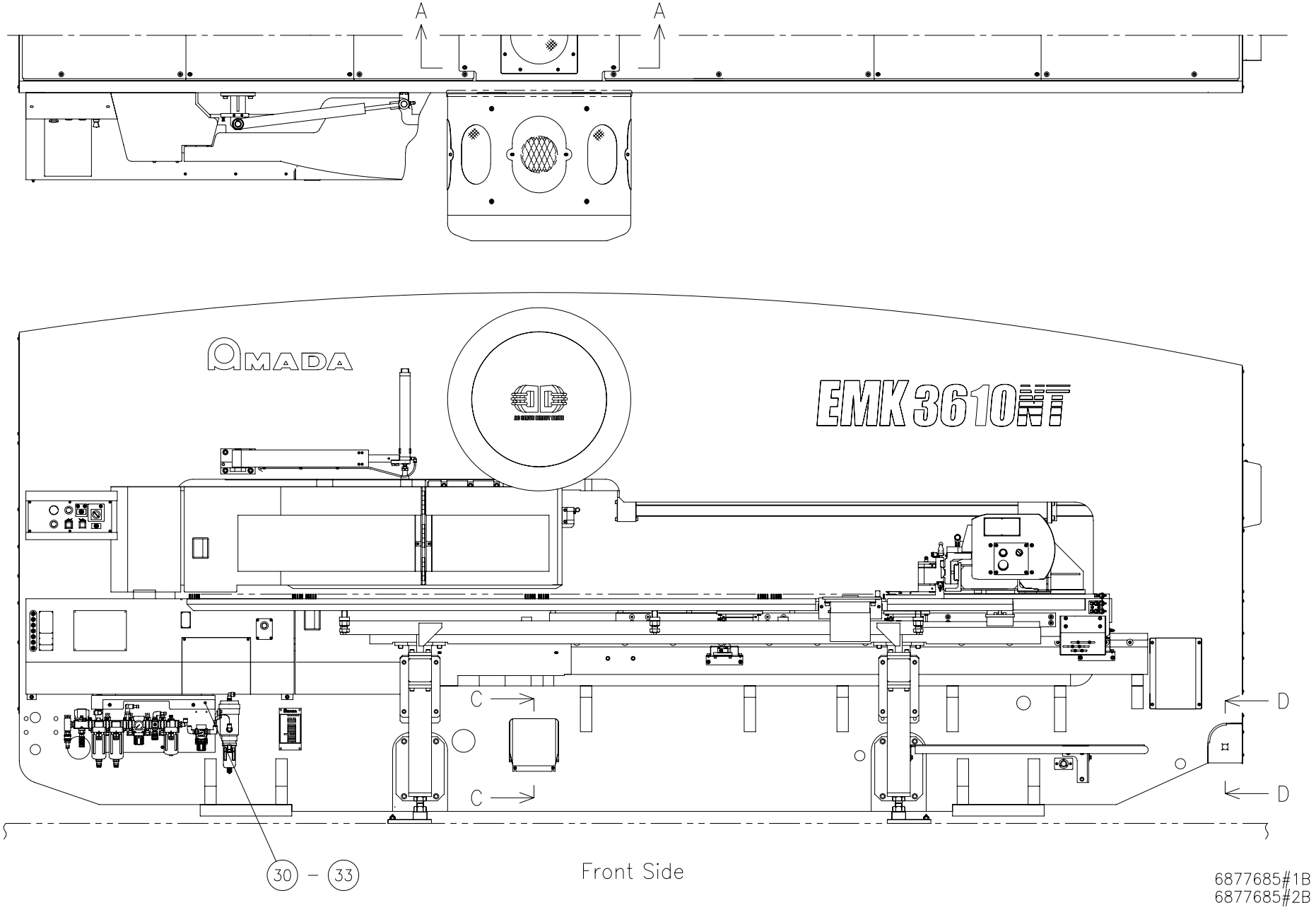
A
A
AMADA
EMK 3610NT
C
C
D
D
30 – 33
Front Side
6877685#1B
6877685#2B

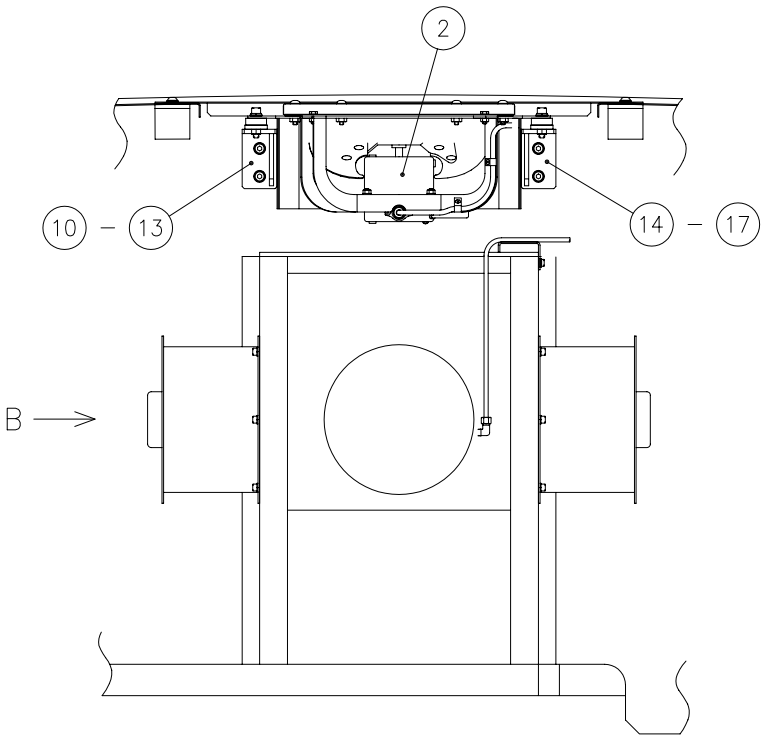

SECTION A–A

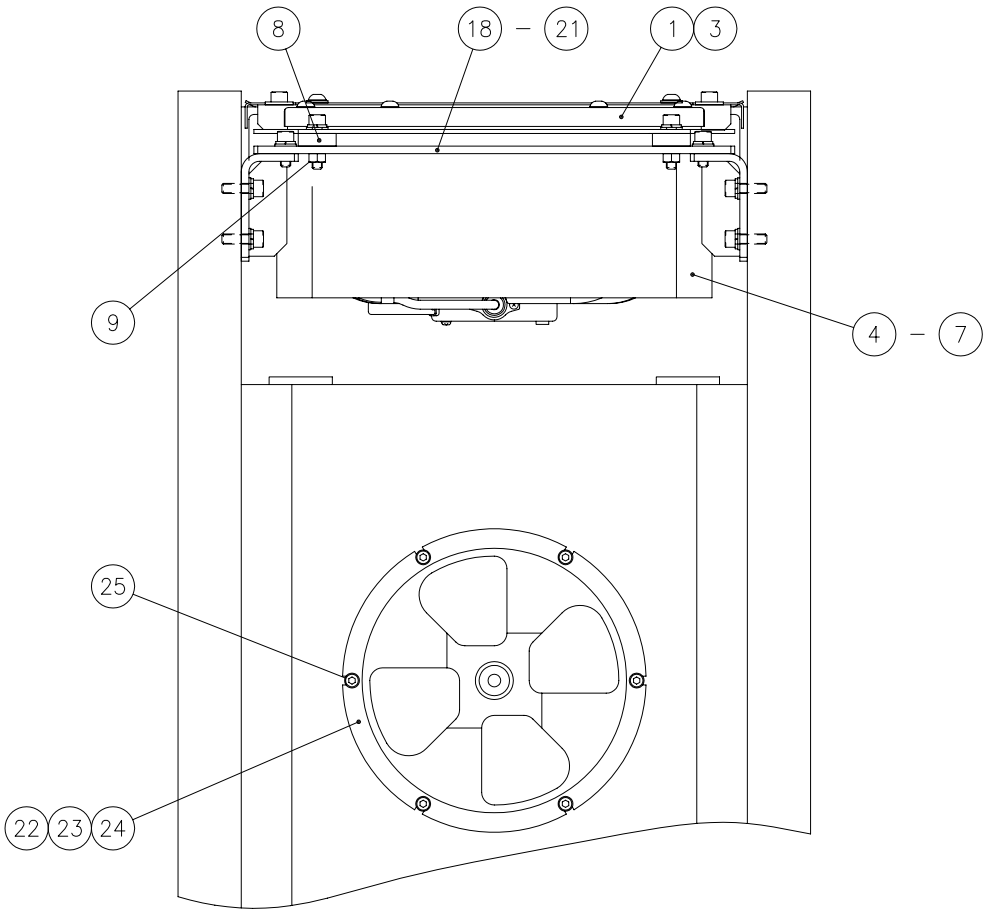

VIEW B

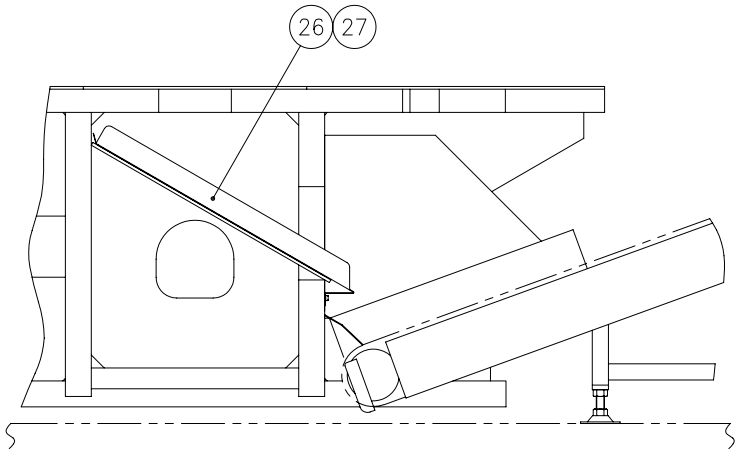

SECTION C–C

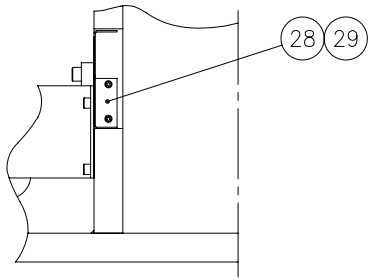

SECTION D–D

6877685#1B
6877685#2B

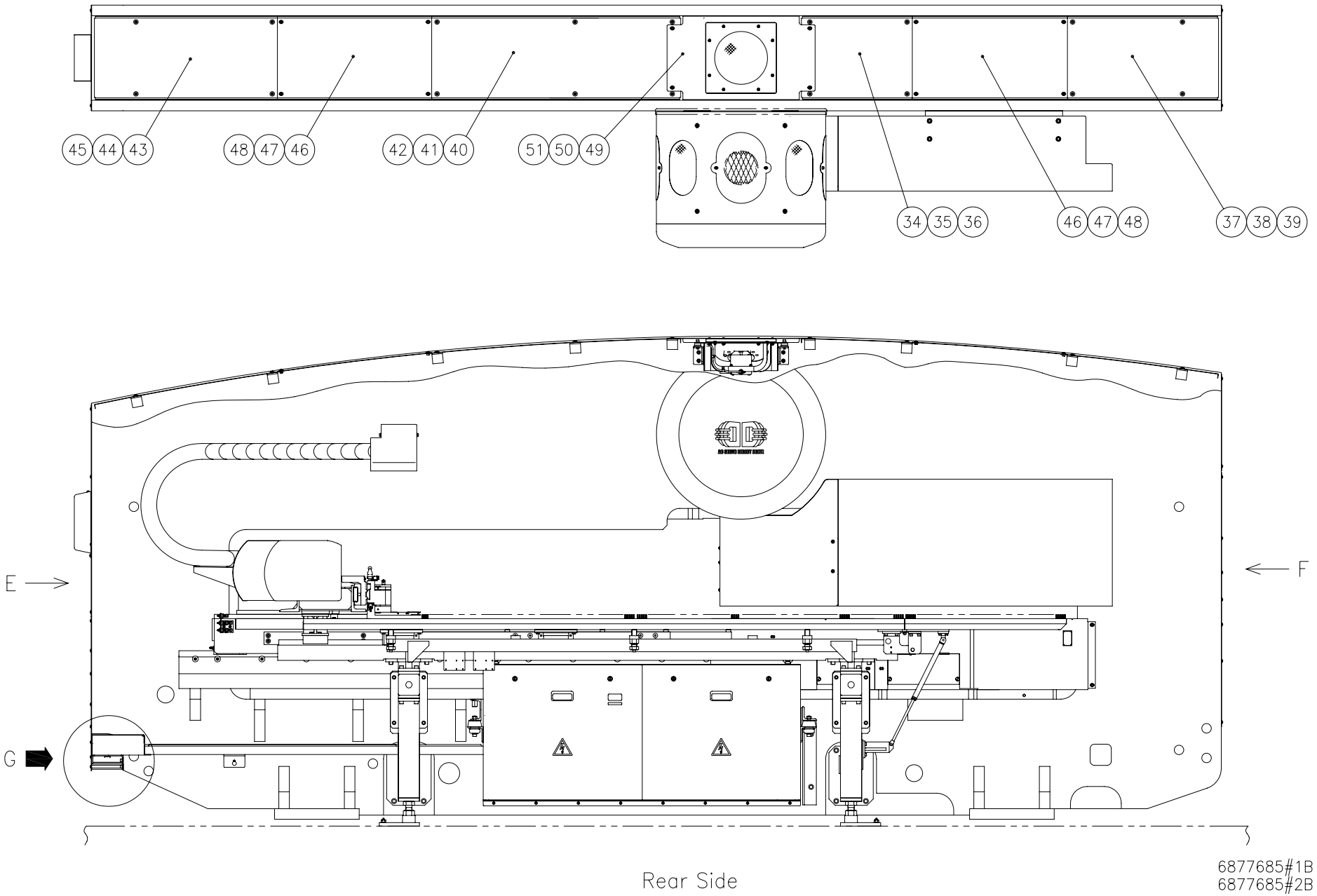
45 44 43
48 47 46
42 41 40
51 50 49
34 35 36
46 47 48
37 38 39
E
F
G
Rear Side
6877685#1B
6877685#2B

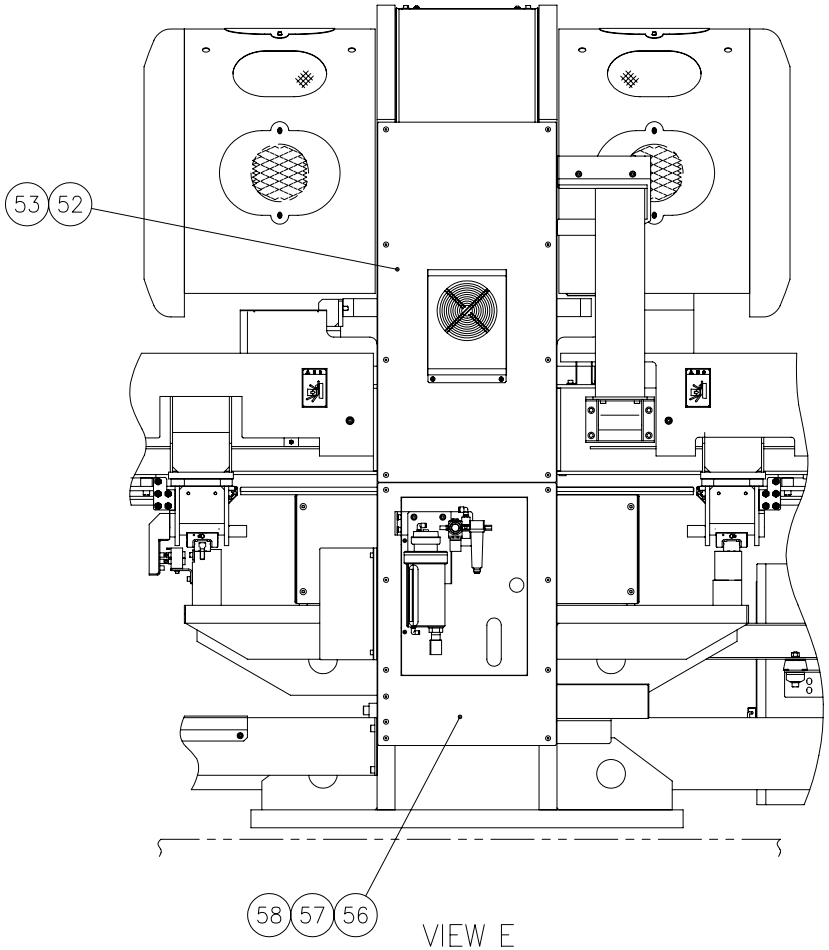

VIEW E

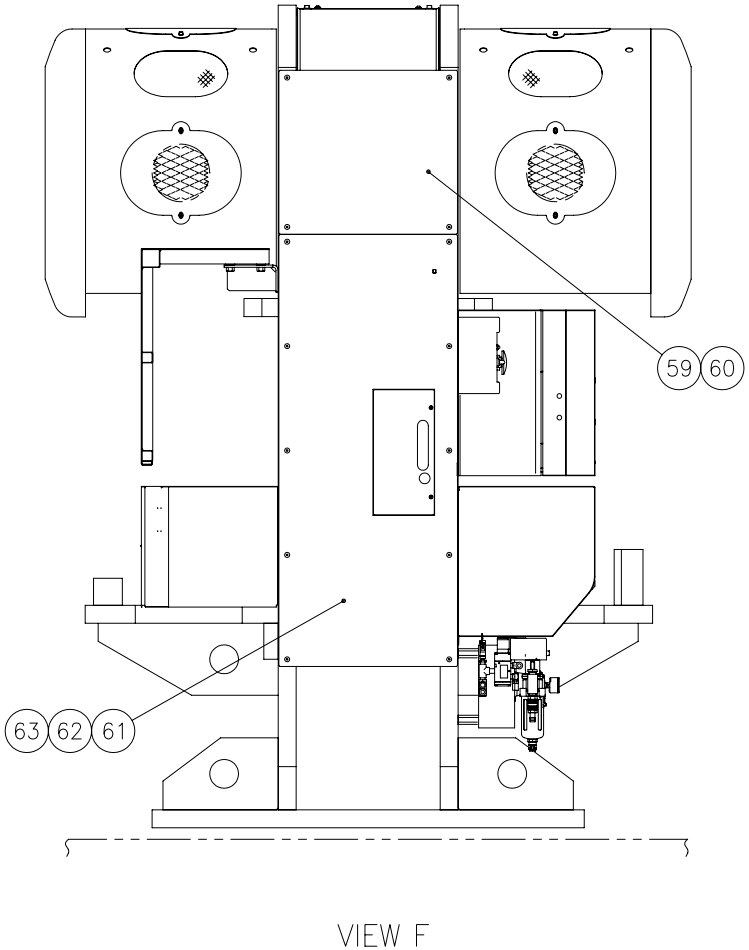

VIEW F

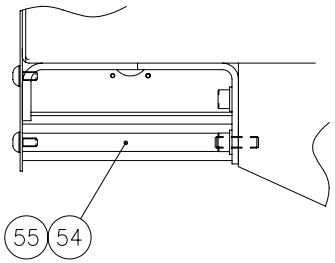

DETAIL G

6877685#1B
6877685#2B

Unit No. 1

Frame(1) From Serial No.36102001 and after

Index	Code	Parts Name	Drawing No.	Type	Maker	Q'ty	Note
1	74379001	Fan Cover	0819106 A			1	
2	74415904	Fan	7834134	PN-254-002SHA	HITACHI	1	
3	74563179	Button Head Screw	P334500062	M6X30		8	
4	74415906	Top Cover	6828479			1	
5	10443022	Hex Soc Cap Screw	P330230009	M8X35		4	
6	86610326	Spring Washer	P336050006	8		4	
7	79567109	Washer	P336000006	8(Regular Round)		4	
8	74417105	Antivibration Rubber	6876550			4	
9	74300504	Nut	P332000005	M8		4	
10	74417106	Base Bracket (1)	6876551			2	
11	79566121	Hex Soc Cap Screw	P330230007	M8X25		4	
12	86610326	Spring Washer	P336050006	8		4	
13	79567109	Washer	P336000006	8(Regular Round)		4	
14	74417107	Base Bracket (2)	6876552			2	
15	79566121	Hex Soc Cap Screw	P330230007	M8X25		4	
16	86610326	Spring Washer	P336050006	8		4	
17	79567109	Washer	P336000006	8(Regular Round)		4	
18	74417108	Bar	6876553			2	
19	79564804	Hex Soc Cap Screw	P330230006	M8X20		4	

Index	Code	Parts Name	Drawing No.	Type	Maker	Q'ty	Note
20	86610326	Spring Washer	P336050006	8		4	
21	79567109	Washer	P336000006	8(Regular Round)		4	
22	74415263	Axial Flow Blower	7833082 A	SF200-40-2	TOAMEC	2	
23	74415264	Seal Flange	6013896 A			2	
24	74415265	Oil Seal	P590175019	V-8A	SIEGLING	2	
25	45252001	Flange Socket Bolt	P330460003	M6X15		12	
26	74577402	Rubber Plate	6812399 A			1	
27	45252001	Flange Socket Bolt	P330460003	M6X15		2	
28	74419092	Connector Cover	6877687 A			1	
29	45252001	Flange Socket Bolt	P330460003	M6X15		2	
30	74569605	Stud (Air Set)	6822578	H17		2	
31	86280603	Socket Set Screw	P330550042	M8X25(Flat-end)		2	
32	74569606	Air Set Cover	6822577			1	except AJV,PV,PDC
32	74418302	Air Control Unit Cover	6877689			1	for AJV,PV,PDC
33	79565423	Hex Soc Cap Screw	P330230004	M8X15		2	
34	74418303	Top Cover (Left 1)	6875294			1	
35	10569021	Button Head Screw	P334500019	M8X15		4	
36	74415270	Washer (M8)	6828456			4	
37	74418304	Top Cover (Left 2)	6875295			1	

Index	Code	Parts Name	Drawing No.	Type	Maker	Q'ty	Note
38	10569021	Button Head Screw	P334500019	M8X15		4	
39	74415270	Washer (M8)	6828456			4	
40	74418305	Top Cover (Right 1)	6875292			1	
41	10569021	Button Head Screw	P334500019	M8X15		6	
42	74415270	Washer (M8)	6828456			6	
43	74418306	Top Cover (Right 2)	6875293			1	
44	10569021	Button Head Screw	P334500019	M8X15		4	
45	74415270	Washer (M8)	6828456			4	
46	74418307	Top Cover (Cap)	6875291			2	
47	10569021	Button Head Screw	P334500019	M8X15		8	
48	79567109	Washer	P336000006	8(Regular Round)		8	
49	74418308	Top Cover (Inner)	6829376			1	
50	10569021	Button Head Screw	P334500019	M8X15		4	
51	79567109	Washer	P336000006	8(Regular Round)		4	
52	74418309	Right Side Cover (Upper)	6875296 A			1	
53	74569504	Button Head Screw	7830643		MOURI	8	
54	74418991	Stud (Side Cover)	6875301	H22		1	
55	13240902	Socket Set Screw	P330550043	M8X30(Flat-end)		1	
56	74418310	Right Side Cover (Lower)	6877688			1	

Unit No. 1

Frame(1) From Serial No.36102001 and after

Index	Code	Parts Name	Drawing No.	Type	Maker	Q'ty	Note
57	74569504	Button Head Screw	7830643		MOURI	8	
58	74300313	Knob Bolt	6018086			2	
59	74418311	Left Side Cover (Upper)	6875298			1	
60	74569504	Button Head Screw	7830643		MOURI	4	
61	74419470	Left Side Cover (Lower)	6877686 B			1	
62	74569504	Button Head Screw	7830643		MOURI	10	
63	74300313	Knob Bolt	6018086			2	

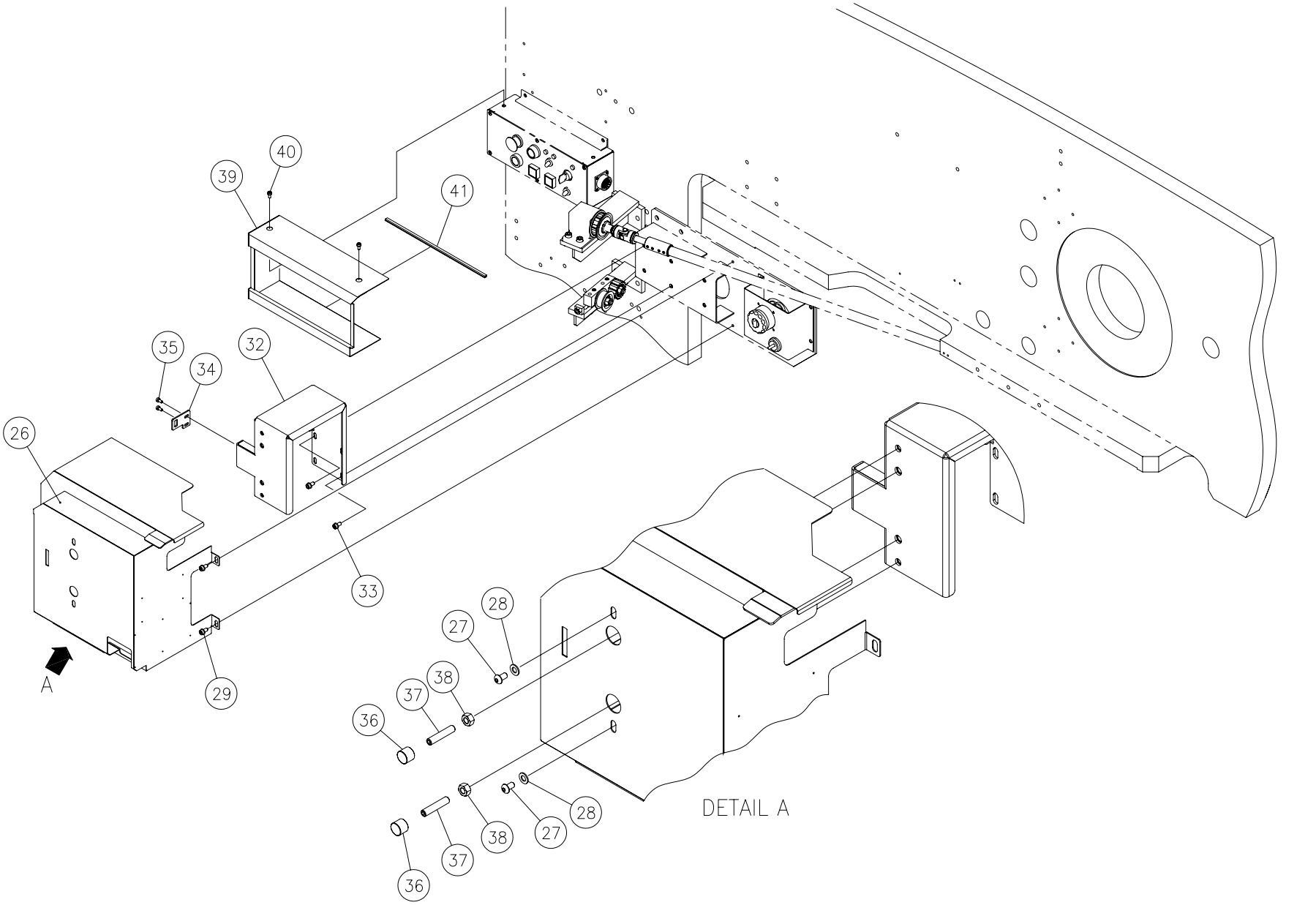
40
39
41
35
34
32
26
33
28
27
38
37
36
29
A
DETAIL A
6878010

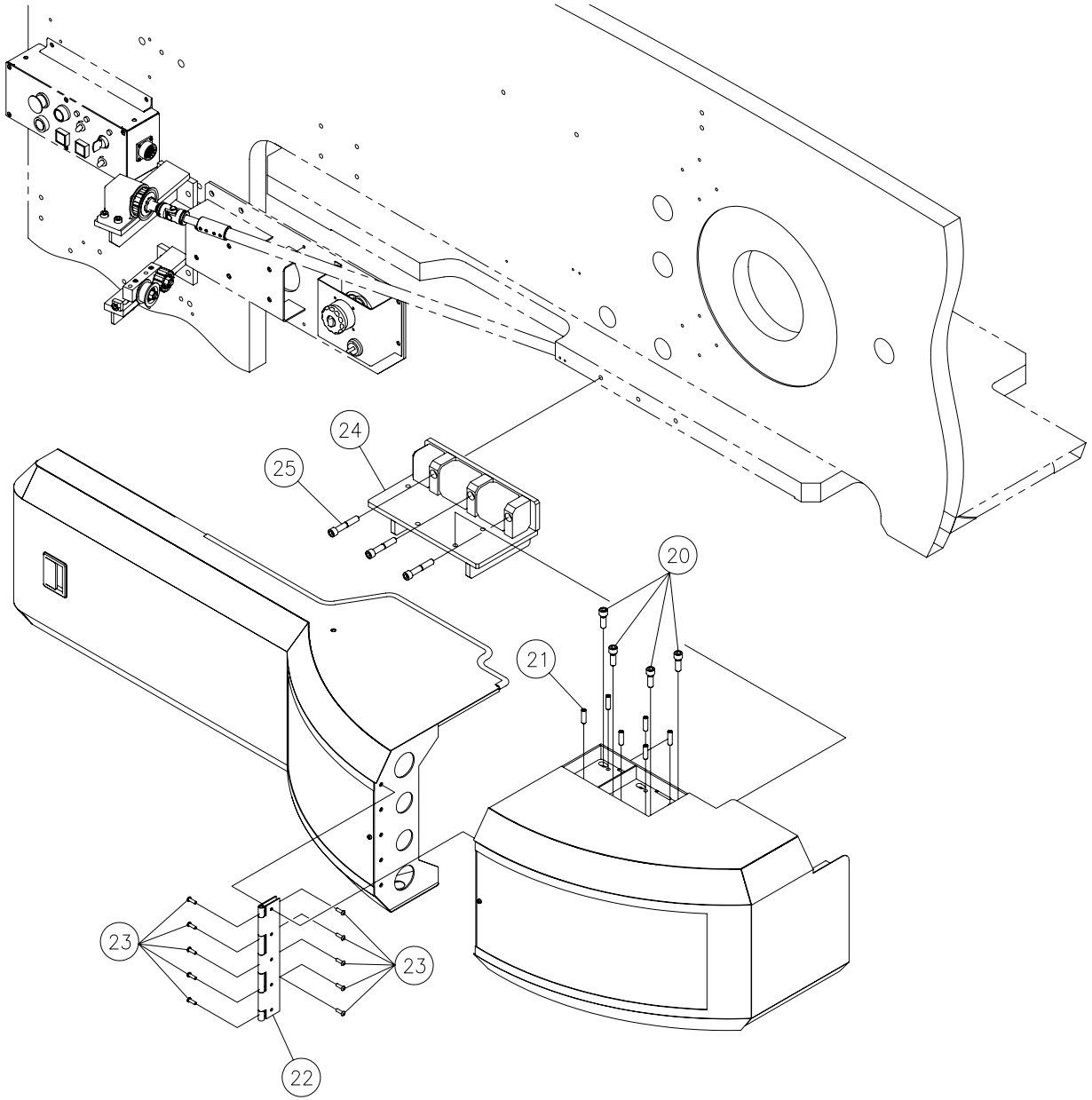

6878010

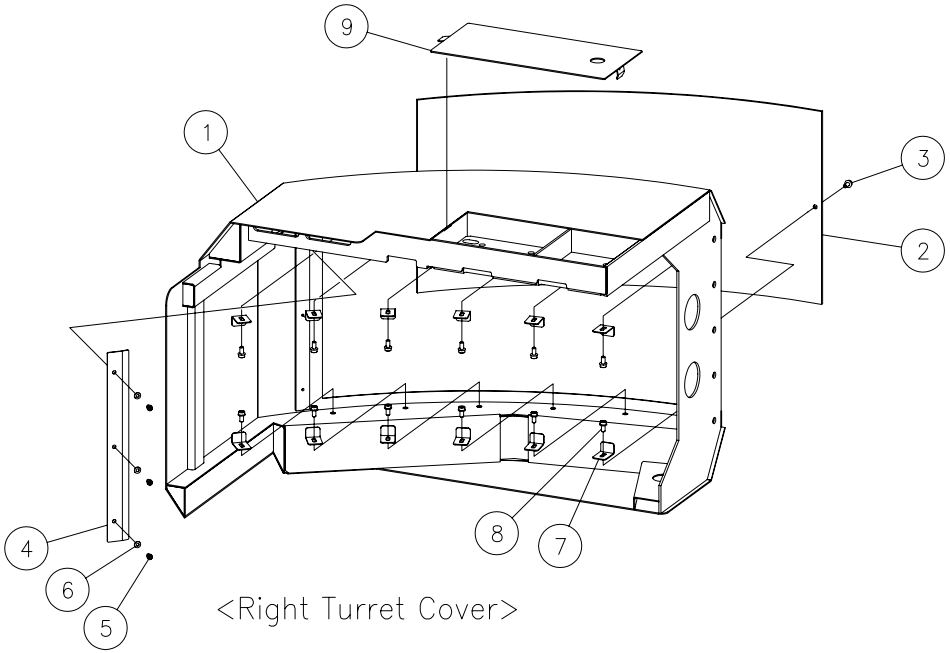
9
1
3
2
4
6
5
8
7
<Right Turret Cover>

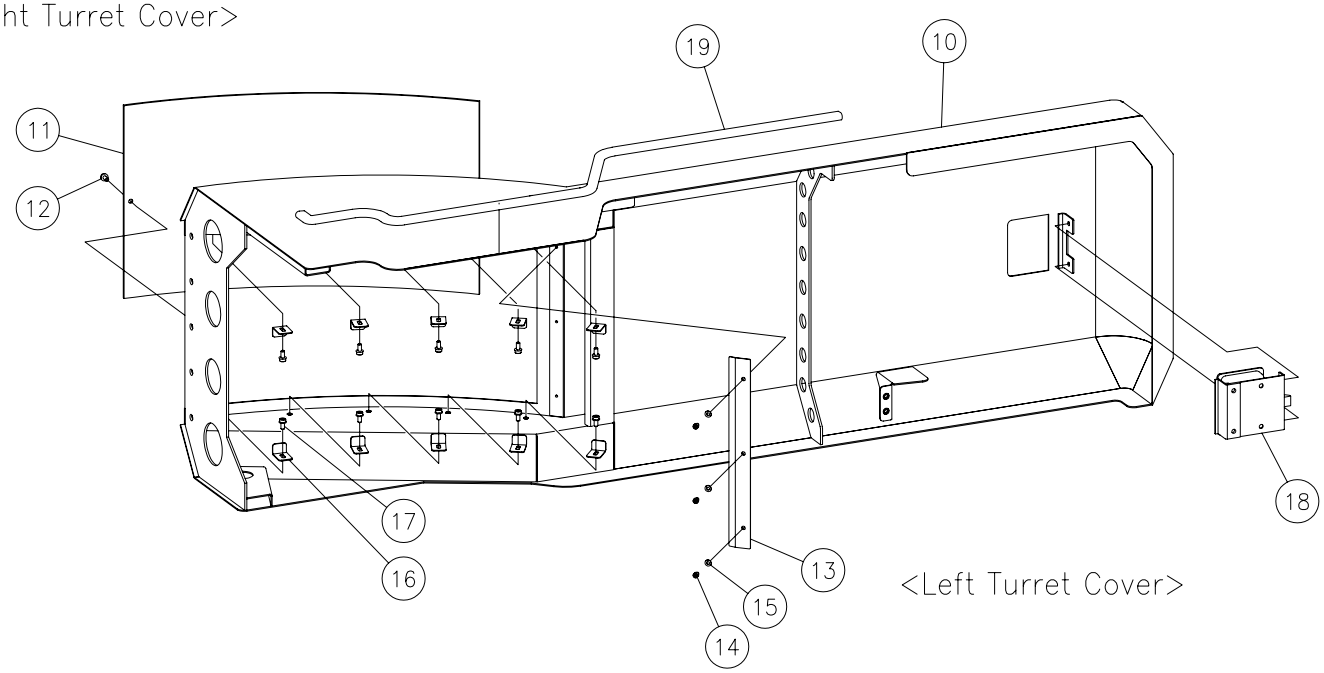
19
10
11
12
17
16
13
15
14
18
<Left Turret Cover>

6878010

Unit No. 2
Frame(2)

From Serial No.36102001 and after

Index	Code	Parts Name	Drawing No.	Type	Maker	Q'ty	Note
1	74419189	Turret Cover (Right)	6877981			1	
2	74419190	Panel Cover (Right)	6877983			1	
3	74570510	Flange Socket Bolt	P330460006	M5X10		1	
4	74419418	Panel Cover Bracket (1)	6877985			1	
5	36500428	Hex Soc Cap Screw	P330200013	M4X6		3	
6	71513636	Washer	P336000092	4(Regular Round)		3	
7	74419419	Panel Cover Bracket (2)	6877986			12	
8	74570510	Flange Socket Bolt	P330460006	M5X10		12	
9	74419414	Upper Turret Cover	6877999			1	
10	74419191	Turret Cover (Left)	6878015			1	
11	74419192	Panel Cover (Left)	6877984			1	
12	74570510	Flange Socket Bolt	P330460006	M5X10		1	
13	74419418	Panel Cover Bracket (1)	6877985			1	
14	36500428	Hex Soc Cap Screw	P330200013	M4X6		3	
15	71513636	Washer	P336000092	4(Regular Round)		3	
16	74419419	Panel Cover Bracket (2)	6877986			10	
17	74570510	Flange Socket Bolt	P330460006	M5X10		10	
18	74379018	Door Handle	P317012011	A-151-2-2	TAKIGEN	1	
19	74419193	Instant Packing	6878017			1	

Index	Code	Parts Name	Drawing No.	Type	Maker	Q'ty	Note
20	36110743	Hex Soc Cap Screw	P330250006	M12X35		4	
21	11161249	Socket Set Screw	P330550055	M10X35(Flat-end)		6	
22	74419194	Hinge Add.Works	7834173			1	
23	74183324	Flat Head Screw	P334110030	M6X20		10	
24	74418318	Turret Cover Bracket (F)	6873064			1	
25	74302822	Hex Soc Cap Screw	P330250013	M12X70		3	
26	74419195	Index Cover	6878013			1	
27	10569021	Button Head Screw	P334500019	M8X15		4	
28	79567109	Washer	P336000006	8(Regular Round)		4	
29	74382078	Flange Socket Bolt	P330468006	M8X15	NISSAN NEJI	2	
30	74419196	Index Cover (Cover)	6877997			1	List Only
31	36379029	Button Head Screw	P334500013	M6X10		4	List Only
32	74419197	Index Cover Bracket	6878014			1	
33	74382078	Flange Socket Bolt	P330468006	M8X15	NISSAN NEJI	4	
34	74419198	Latch	6878016			1	
35	74731367	Flange Socket Bolt	P330468026	M6X12	NISSAN NEJI	2	
36	74563534	Cushion	0823072 A			2	
37	10455119	Socket Set Screw	P330550100	M10X50(Flat-end)		2	
38	10427991	Nut	P332000006	M10		2	

Unit No. 2

Frame(2)

From Serial No.36102001 and after

Index	Code	Parts Name	Drawing No.	Type	Maker	Q'ty	Note
39	74419199	Sub Control Box Cover	6877991			1	
40	74731367	Flange Socket Bolt	P330468026	M6X12	NISSAN NEJI	2	
41	74419201	Edge Rubber	6878009			1	

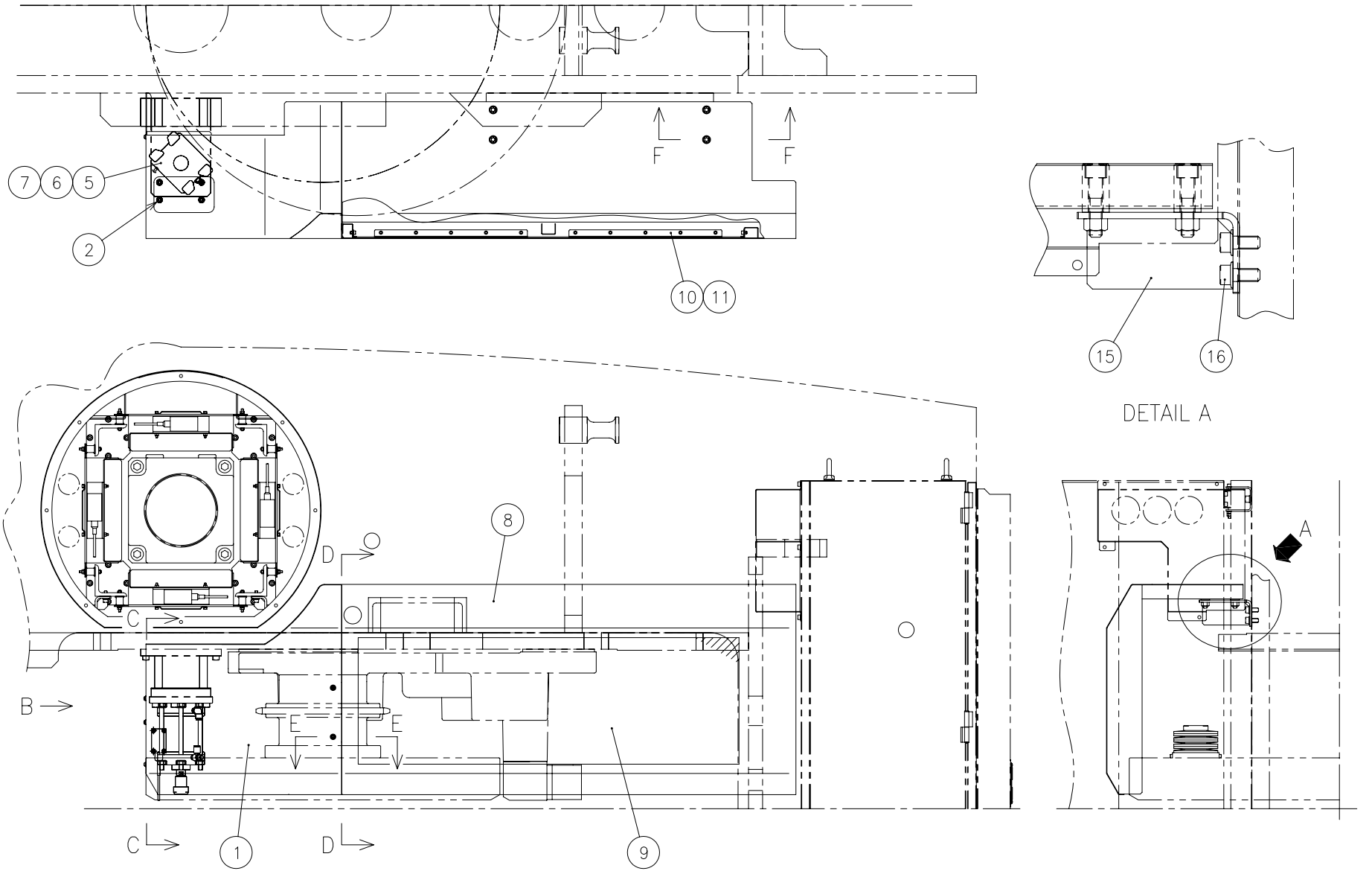

6878025A

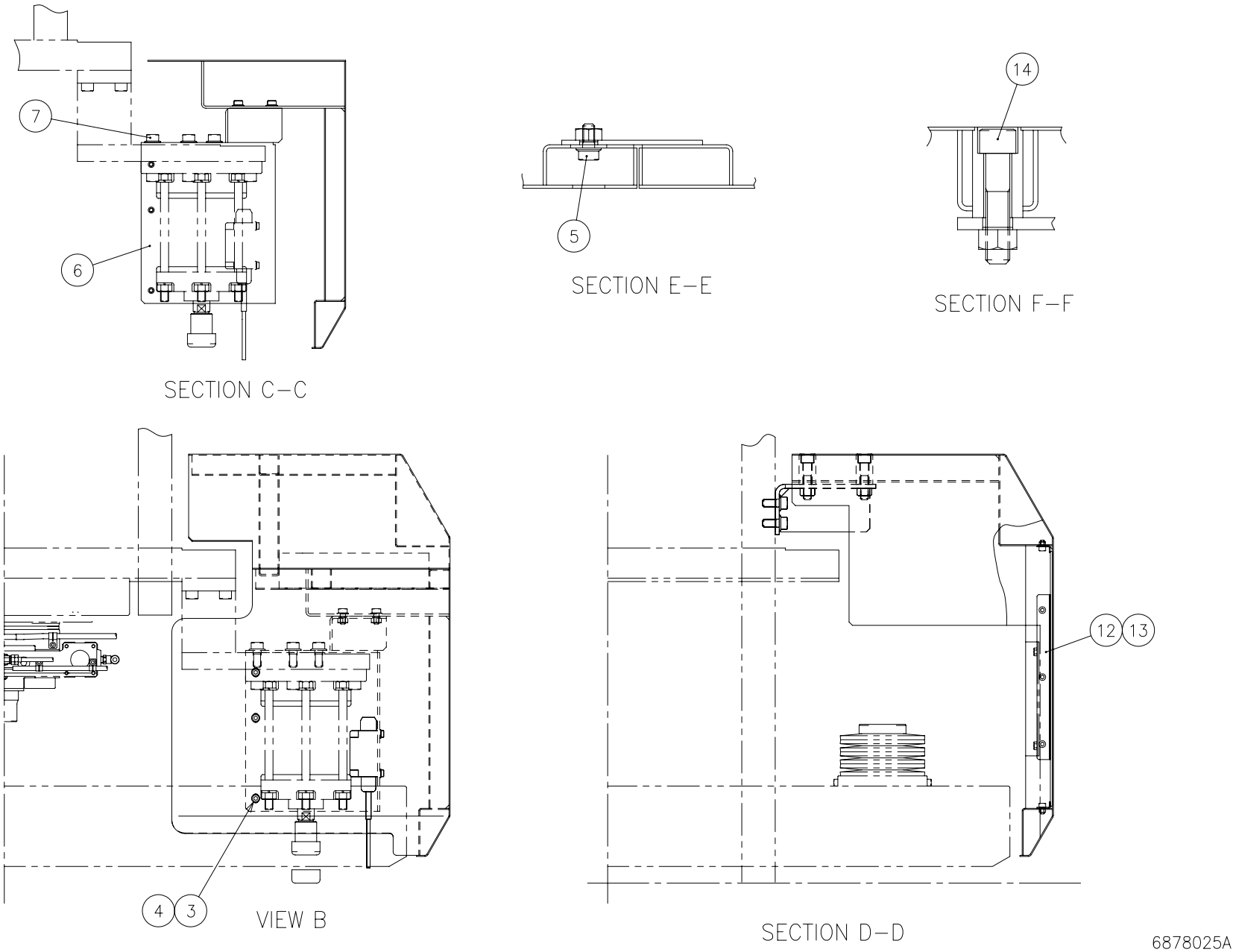
7
6
SECTION C–C
5
SECTION E–E
14
SECTION F–F
4
3
VIEW B
12
13
SECTION D–D
6878025A

Unit No. 3
Frame(3)

From Serial No.36102001 and after

Index	Code	Parts Name	Drawing No.	Type	Maker	Q'ty	Note
1	74419202	Rear Turret Cover (Left)	3806905 A			1	
2	74382078	Flange Socket Bolt	P330468006	M8X15	NISSAN NEJI	4	
3	74300624	Button Head Screw	P334500015	M6X15		3	
4	79565419	Washer	P336000005	6(Regular Round)		3	
5	45252001	Flange Socket Bolt	P330460003	M6X15		2	
6	74810007	Turret Cover Bracket (R1)	3806910			1	
7	45252020	Flange Socket Bolt	P330468037	M12X25	NISSAN NEJI	3	
8	74419203	Rear Turret Cover (Right)	6878027			1	
9	74810009	Panel Cover (1)	3806911 B			1	
10	74415304	Panel Bracket (3)	6828633			4	
11	74570510	Flange Socket Bolt	P330460006	M5X10		20	
12	74415305	Panel Bracket (4)	6828634			2	
13	74570510	Flange Socket Bolt	P330460006	M5X10		6	
14	74304914	Hex Soc Cap Screw	P330250010	M12X55		4	
15	74418326	Turret Cover Bracket (3)	6875271			1	
16	45252020	Flange Socket Bolt	P330468037	M12X25	NISSAN NEJI	4	

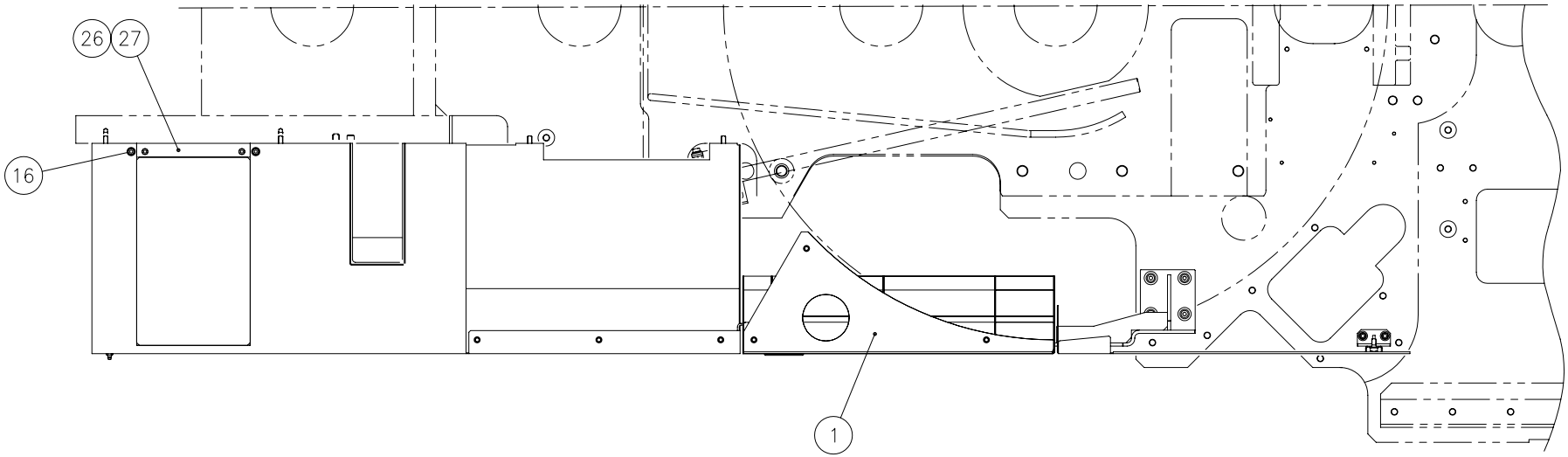
26
27
16
1

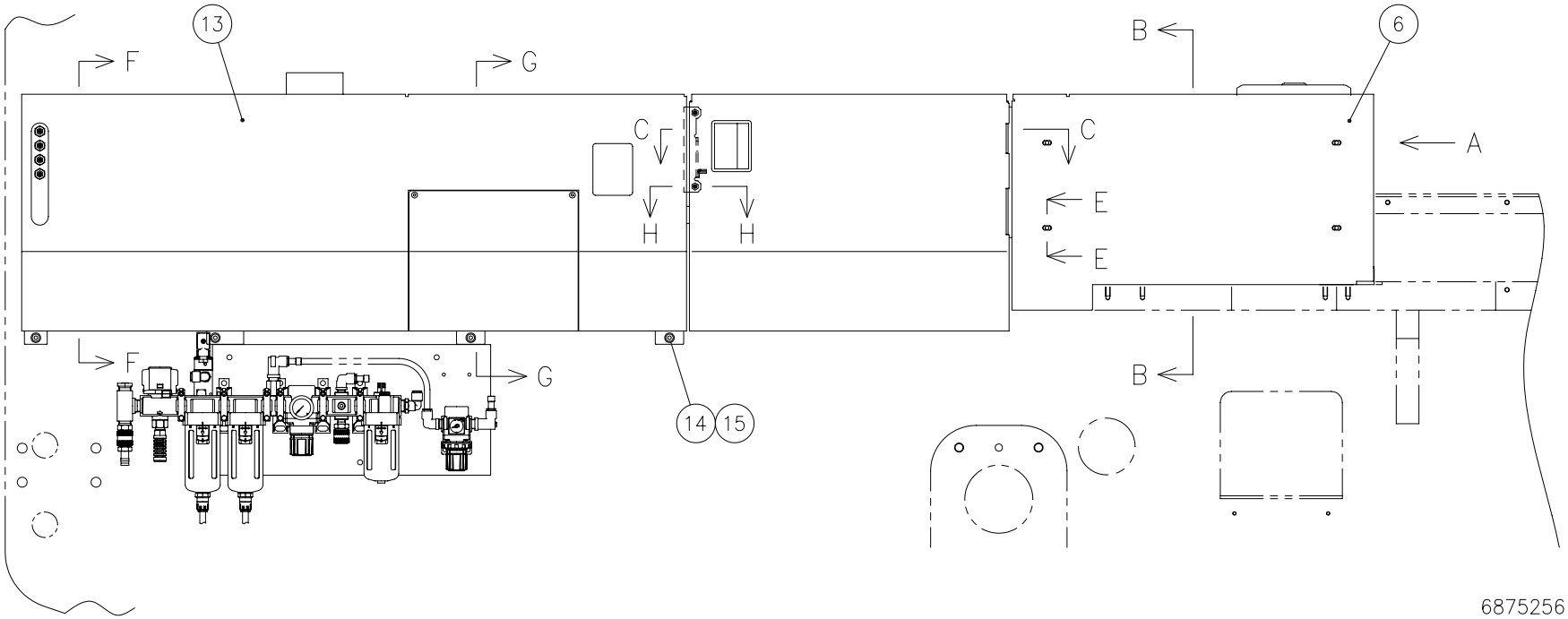
13
F
G
C
H
H
B
6
C
A
E
E
F
G
B
14
15
6875256

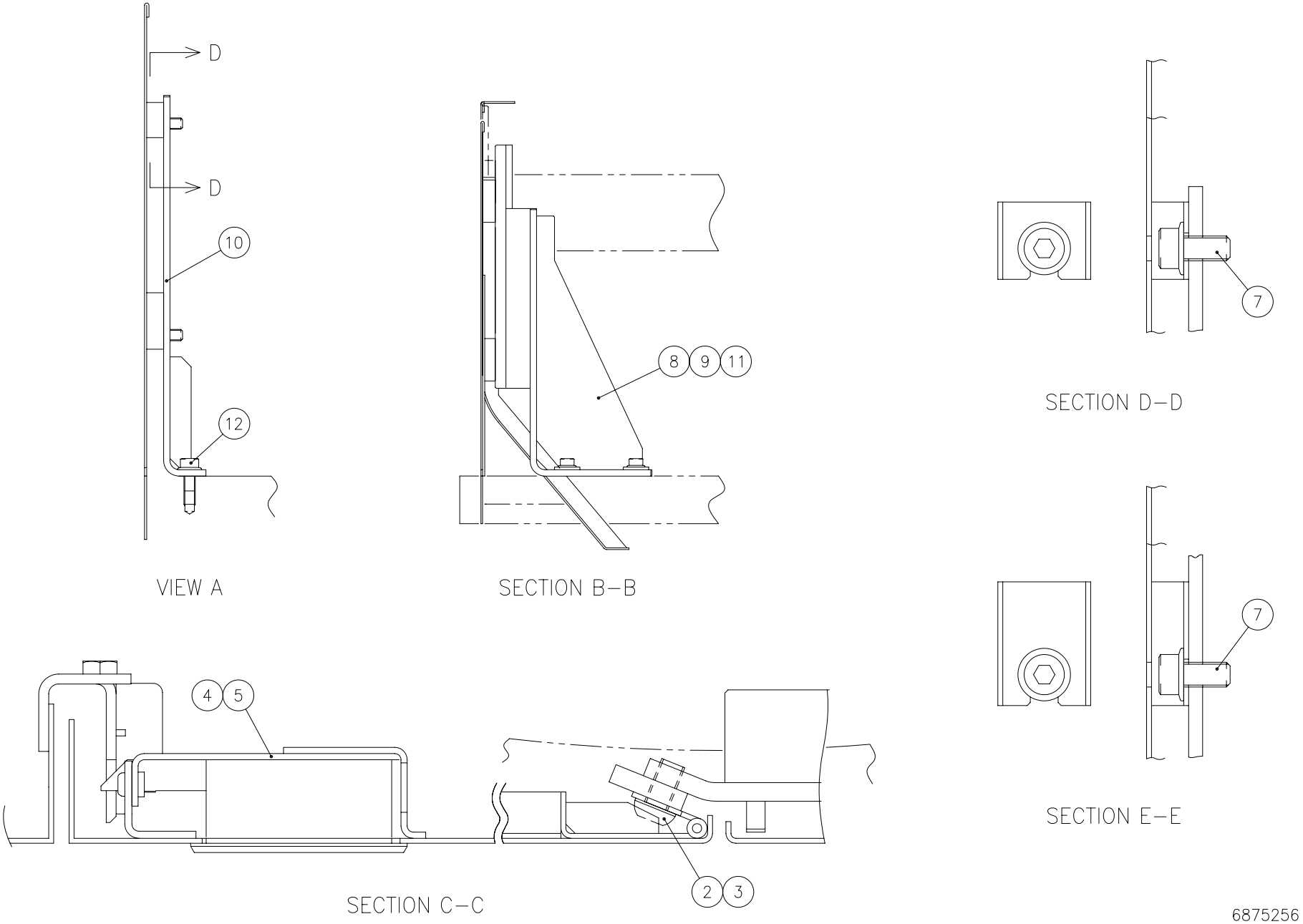
D
D
10
12
VIEW A
8
9
11
SECTION B–B
7
SECTION D–D
7
SECTION E–E
4
5
2
3
SECTION C–C
6875256

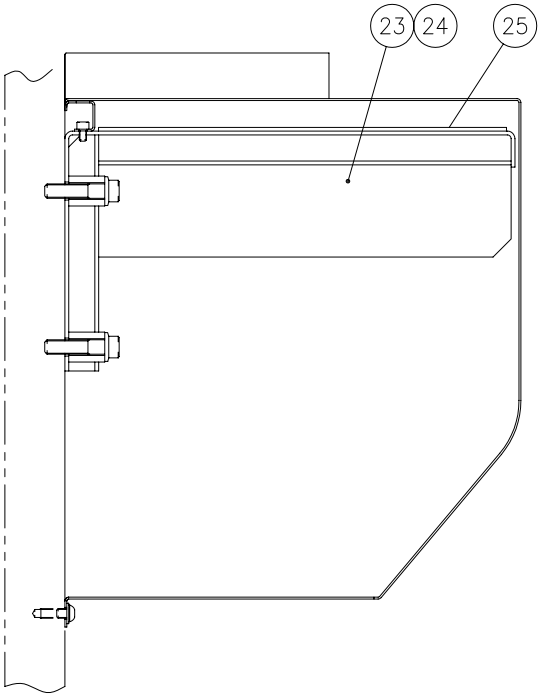

SECTION F–F

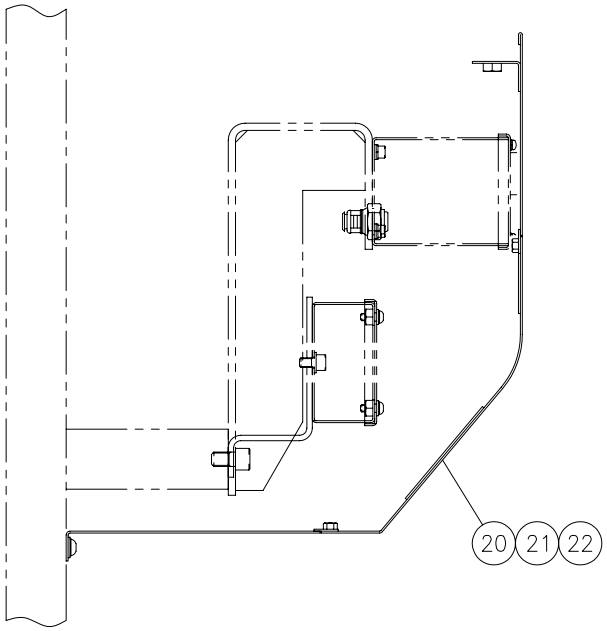

SECTION G–G

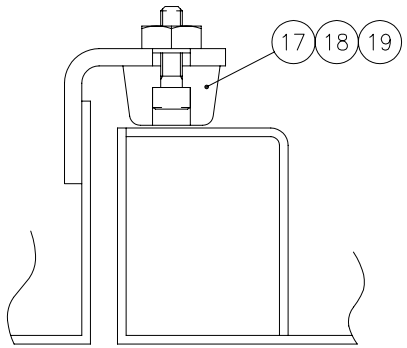

SECTION H–H

6875256

Unit No. 4
Frame(4)

From Serial No.36102001 and after

Index	Code	Parts Name	Drawing No.	Type	Maker	Q'ty	Note
1	74571218	Lower Turret Door	6821953 A			1	
2	10569021	Button Head Screw	P334500019	M8X15		2	
3	79567109	Washer	P336000006	8(Regular Round)		2	
4	74379018	Door Handle	P317012011	A-151-2-2	TAKIGEN	1	
5	79573416	Hex Soc Cap Screw	P330210003	M5X10		2	
6	74577405	Cover (F)	6823357 A			1	
7	45252746	Flange Socket Bolt	P330460005	M8X15		4	
8	74418327	Lower Turret Door Bracket	6820434 D			1	
9	75420815	Flange Socket Bolt	P330468001	M8X20	NISSAN NEJI	4	
10	74569540	Cover (F) Bracket	6820435			1	
11	86613931	Washer	P336000008	12(Regular Round)		4	
12	74382078	Flange Socket Bolt	P330468006	M8X15	NISSAN NEJI	2	
13	74418328	Working Table Cover	6875275			1	
14	10569021	Button Head Screw	P334500019	M8X15		4	
15	79567109	Washer	P336000006	8(Regular Round)		4	
16	79565422	Hex Soc Cap Screw	P330220011	M6X25		2	
17	74515201	Rubber Support	P229102002	C-30-RK-18	TAKIGEN	2	
18	86620301	Hex Soc Cap Screw	P330200018	M4X15		2	
19	71513636	Washer	P336000092	4(Regular Round)		2	

Unit No. 4

Frame(4) From Serial No.36102001 and after

Index	Code	Parts Name	Drawing No.	Type	Maker	Q'ty	Note
20	74418329	Cover	6875276			1	
21	74300624	Button Head Screw	P334500015	M6X15		4	
22	79565419	Washer	P336000005	6(Regular Round)		4	
23	74418330	Workbench	6875277			1	
24	74564606	Flange Socket Bolt	P330468038	M12X50	NISSAN NEJI	4	
25	74569545	Rubber Mat	6812500			1	
26	74569546	Edge Cover	6812501			1	
27	31183033	Hex Soc Cap Screw	P330220003	M6X10		2	

Frame(5)-1/2 <Lower Turret Cover (R)>

From Serial No.36102001 and after

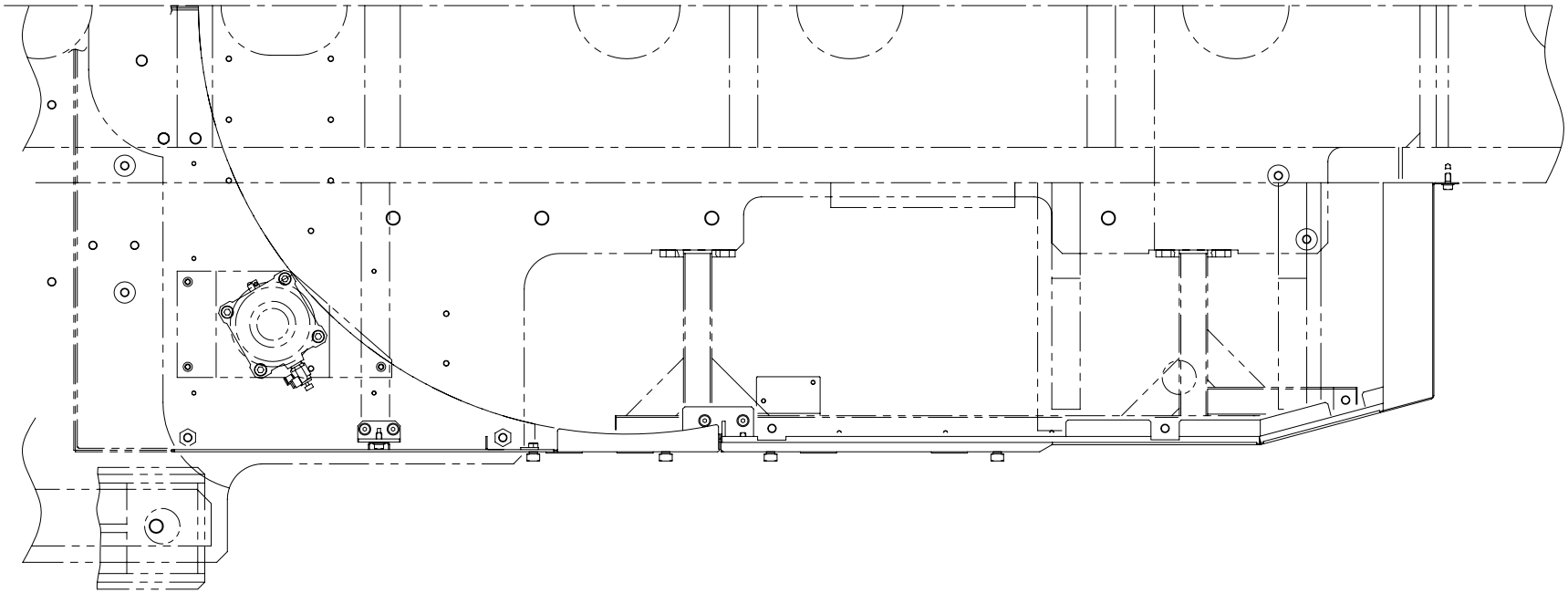

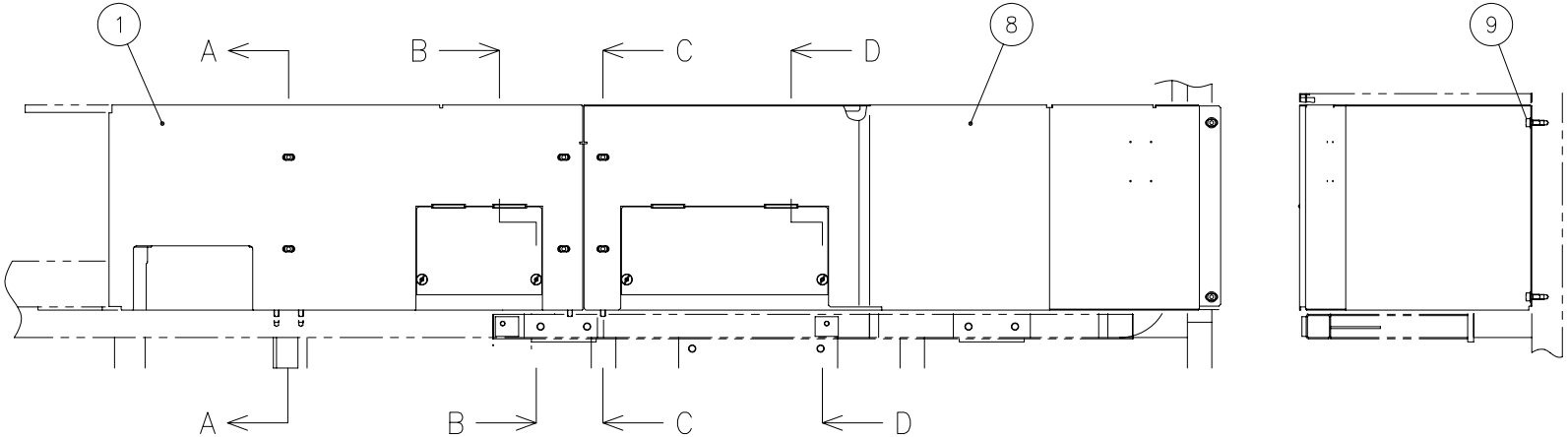

6875257

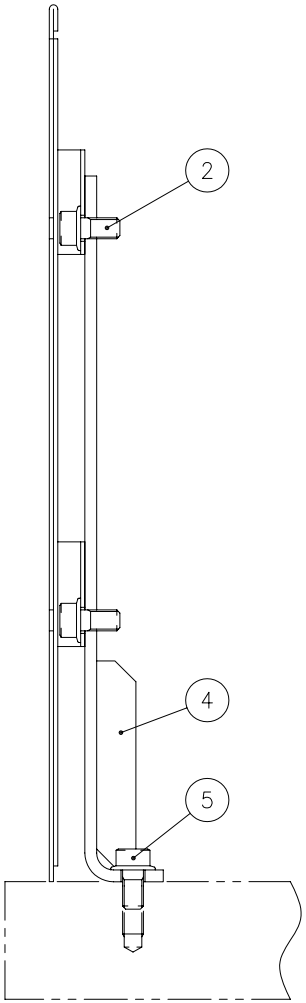

SECTION A–A

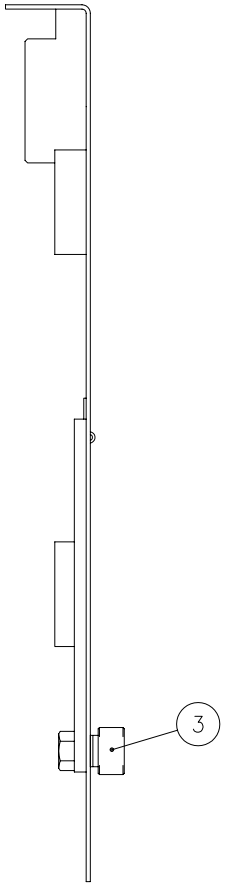

SECTION B–B

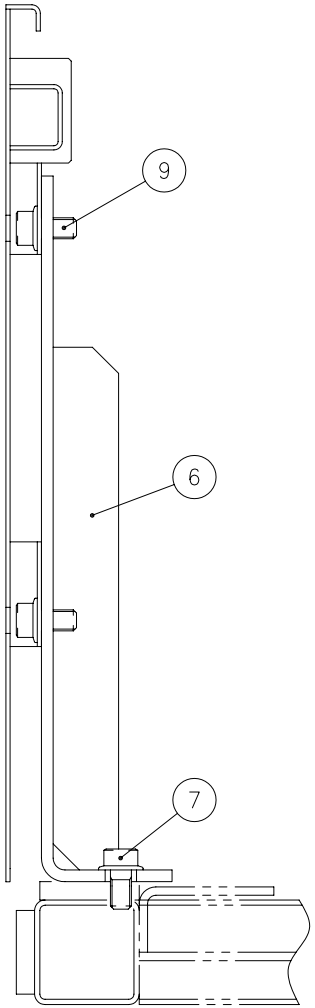

SECTION C–C

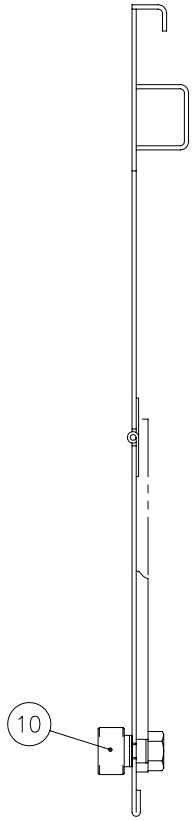

SECTION D–D

6875257

Unit No. 5

Frame(5) From Serial No.36102001 and after

Index	Code	Parts Name	Drawing No.	Type	Maker	Q'ty	Note
1	74418331	Cover R (1)	6829427			1	
2	45252746	Flange Socket Bolt	P330460005	M8X15		4	
3	74561016	Knob	P317212025	A-176-S-1	TAKIGEN	2	EXP
3	74300313	Knob Bolt	6018086	(M6X15)		2	EU
4	74418332	Cover (F) Bracket	6829426			1	
5	74382078	Flange Socket Bolt	P330468006	M8X15	NISSAN NEJI	2	
6	74562903	Cover R Bracket 2	7400280 B			1	
7	74382078	Flange Socket Bolt	P330468006	M8X15	NISSAN NEJI	2	
8	74418333	Cover R (2)	6875278 A			1	
9	74382078	Flange Socket Bolt	P330468006	M8X15	NISSAN NEJI	4	
10	74561016	Knob	P317212025	A-176-S-1	TAKIGEN	2	EXP
10	74300313	Knob Bolt	6018086	(M6X15)		2	EU

Frame(6)-1/2 <X-axis Fan>

From Serial No.36102001 and after

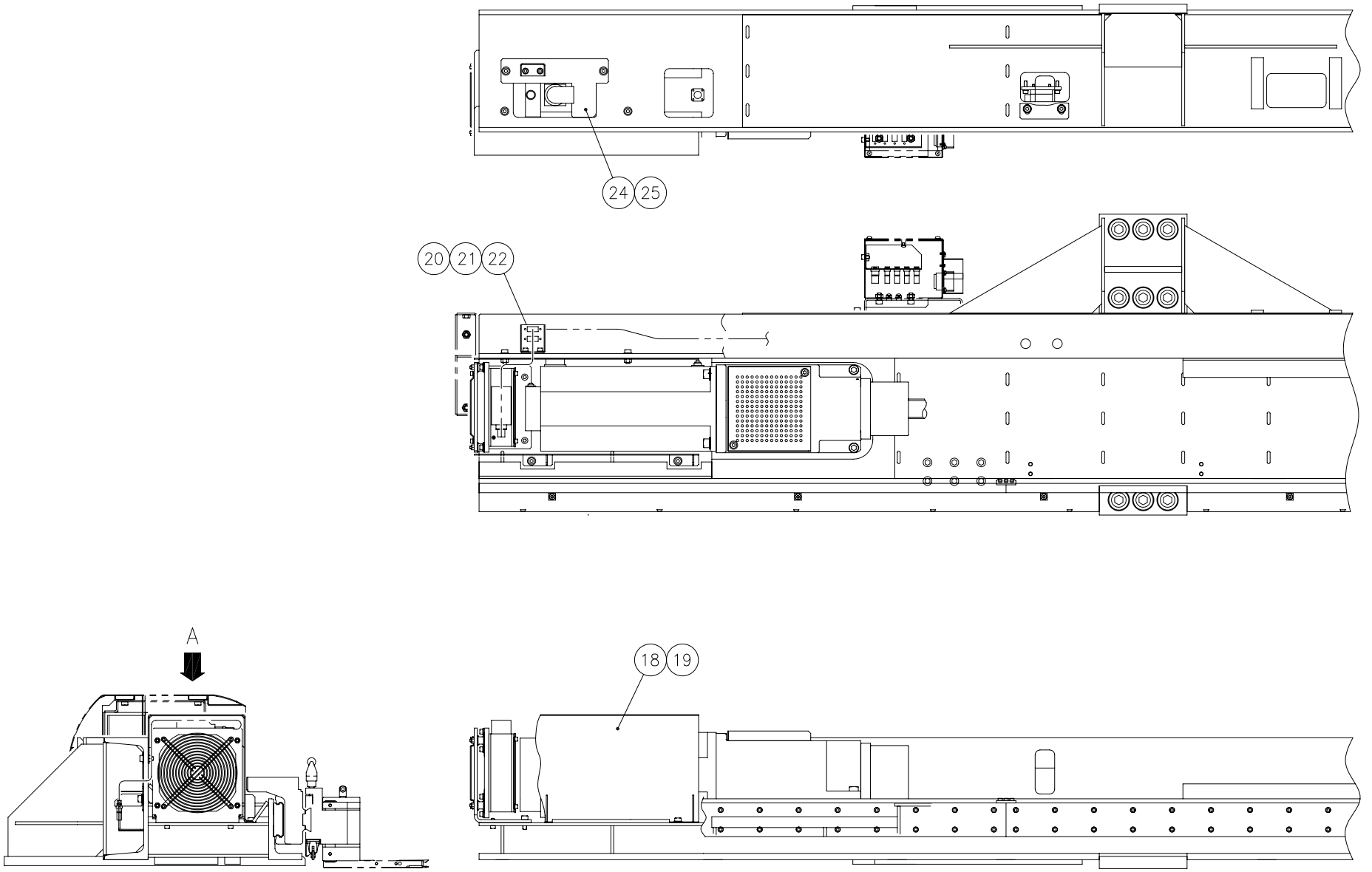

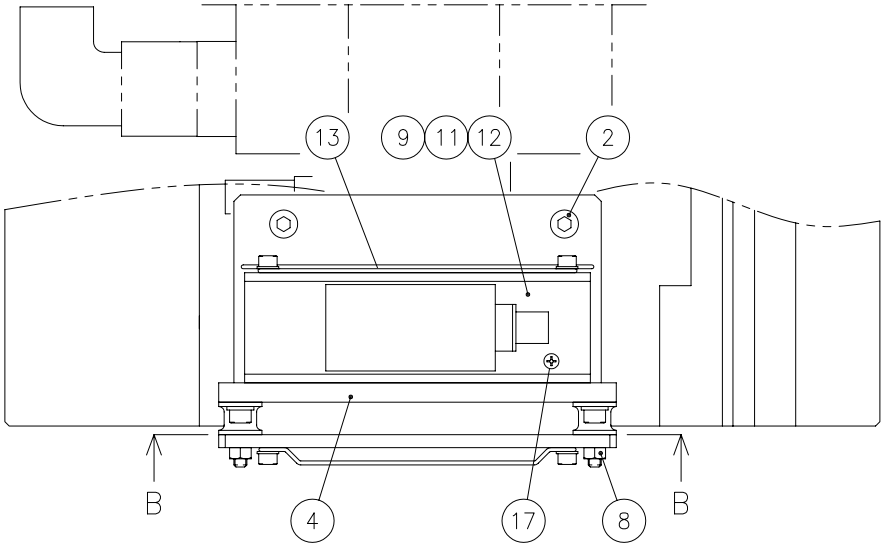

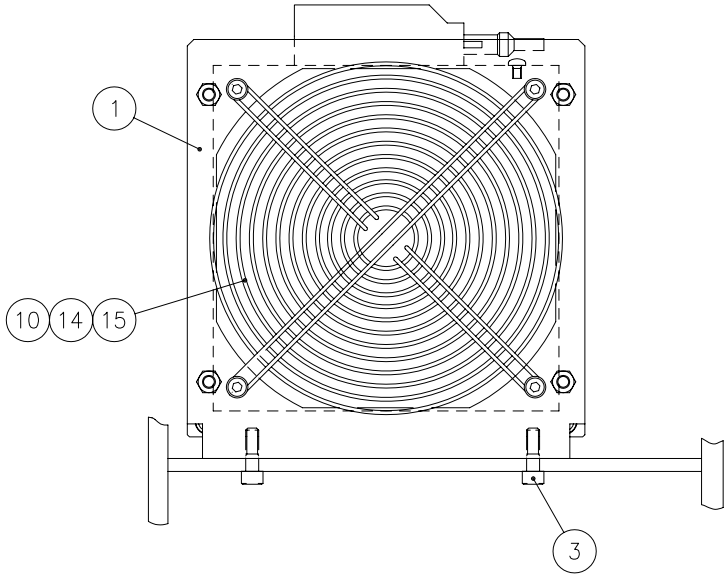

DETAIL A

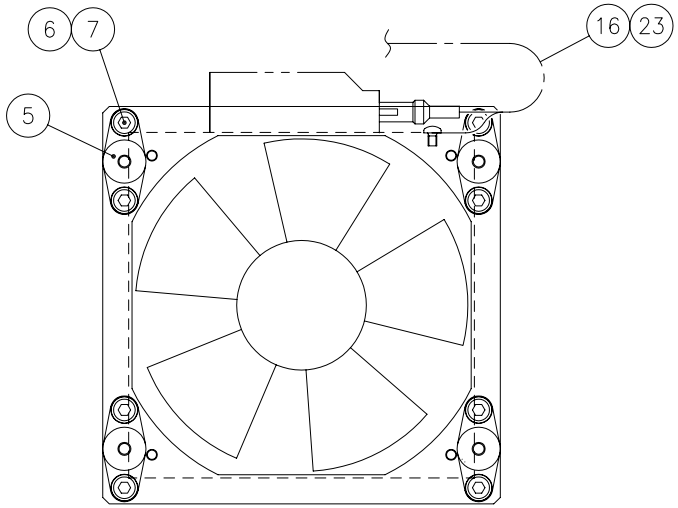

SECTION B–B

6877384A

Unit No. 6
Frame(6)

From Serial No.36102001 and after

Index	Code	Parts Name	Drawing No.	Type	Maker	Q'ty	Note
1	74417158	Fan Bracket (A)	6874402			1	
2	79566121	Hex Soc Cap Screw	P330230007	M8X25		2	
3	79567722	Hex Soc Cap Screw	P330220009	M6X20		2	
4	74417159	Fan Bracket (B)	6874403			1	
5	74564902	Vibration Isolator	P382002022	KB-20	KURASHIKI KAKO	4	
6	79565201	Hex Soc Cap Screw	P330220004	M6X12		8	
7	79565419	Washer	P336000005	6(Regular Round)		8	
8	31179404	Nut	P332000030	M6(Type-1)		4	
9	74571231	Fan	P538002001	109-602	SANYO Electric	1	
10	74415338	Accessory For Fan	P538072013	109-619E	SANYO Electric	1	
11	74383692	Hex Soc Cap Screw	P330210017	M5X60		4	
12	31182981	Washer	P336000080	5(Regular Round)		4	
13	74415339	Accessory For Fan	P538072014	109-620	SANYO Electric	1	
14	79573416	Hex Soc Cap Screw	P330210003	M5X10		4	
15	31182981	Washer	P336000080	5(Regular Round)		4	
16	74417160	Cable EV42-1	6874553			1	
17	79316430	Pan Head Screw	P334100015	M4X5		1	
18	74417155	Fan Cover	6874404			1	
19	74388239	Hex Soc Cap Screw	P334318002	GT-LA-M8X15	GOSHO Works	4	

Unit No. 6

Frame(6) From Serial No.36102001 and after

Index	Code	Parts Name	Drawing No.	Type	Maker	Q'ty	Note
20	74417156	CN Bracket	6873348			1	
21	79564305	Hex Soc Cap Screw	P330220006	M6X15		2	
22	79565419	Washer	P336000005	6(Regular Round)		2	
23	74569473	Cable Band	P381058104	SKB-85MM	KITAGAWA	2	
24	74417157	Cap (CN)	6874368			1	
25	74388239	Hex Soc Cap Screw	P334318002	GT-LA-M8X15	GOSHO Works	2	

Unit No. 7

Frame(7) <Y-axis Motor Fan>

From Serial No.36102001 and after

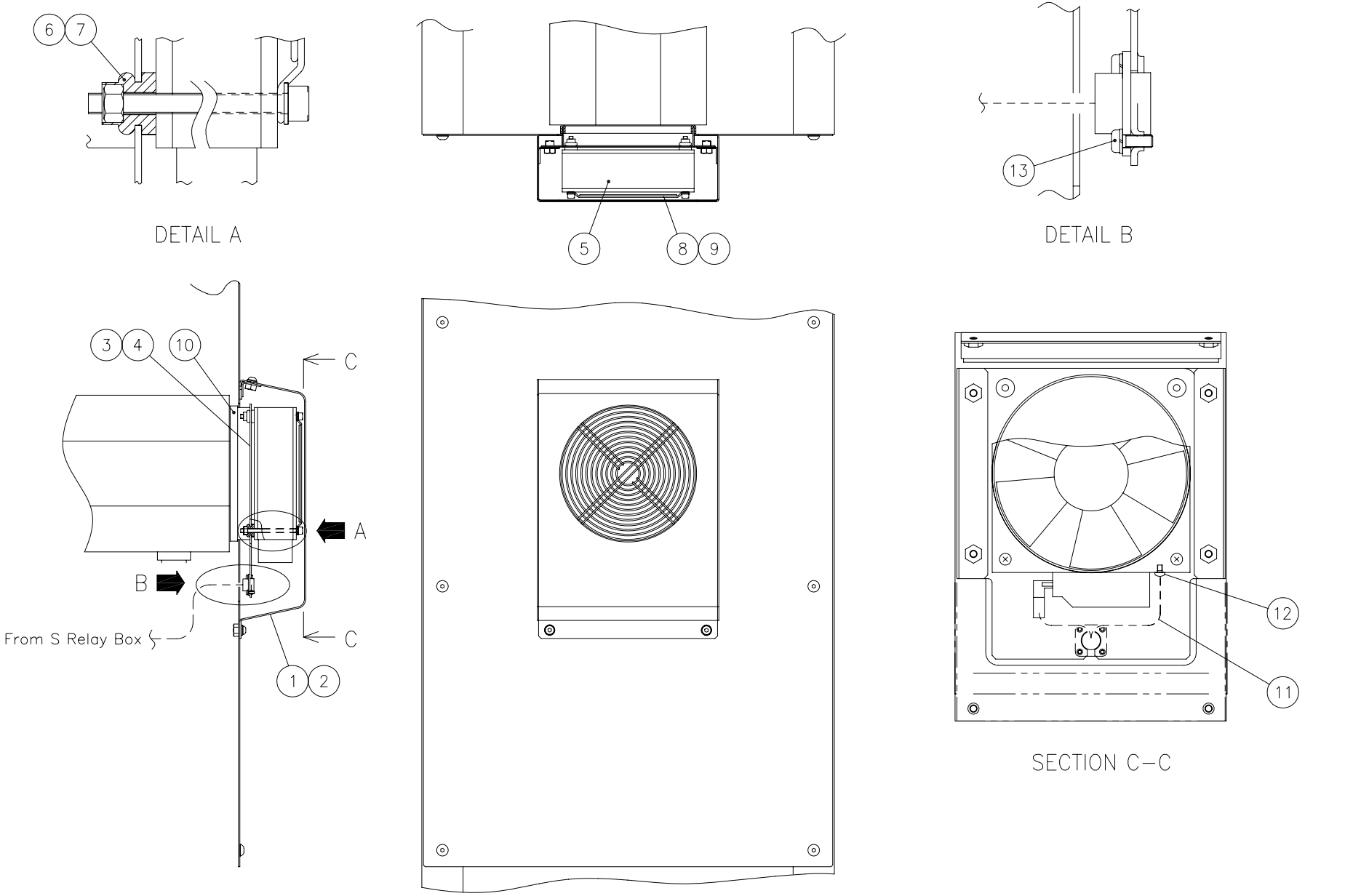

Unit No. 7
Frame(7)

From Serial No.36102001 and after

Index	Code	Parts Name	Drawing No.	Type	Maker	Q'ty	Note
1	74418334	Fan Cover (Y)	6875273			1	
2	74569504	Button Head Screw	7830643		MOURI	4	
3	74418335	Fan Bracket (Y)	6875274			1	
4	79564305	Hex Soc Cap Screw	P330220006	M6X15		4	
5	74571231	Fan	P538002001	109-602	SANYO Electric	1	
6	74417149	Vibroisolating Nut	P332248001	Q-5	SWCC	4	
7	79316115	Hex Soc Cap Screw	P330210022	M5X70		4	
8	74415338	Accessory For Fan	P538072013	109-619E	SANYO Electric	1	
9	31182981	Washer	P336000080	5(Regular Round)		4	
10	74306820	Rubber Packing	0383322 A			1	
11	74417150	Cable EV43-1	6874554			1	
12	79316430	Pan Head Screw	P334100015	M4X5		1	
13	74560868	Pan Head Screw	P334100003	M3X6		4	
14	74417151	Motor Cover (1)	6875810			1	List Only
15	74417152	Motor Cover (2)	6875811			1	List Only
16	74417153	Motor Cover (3)	6875812			1	List Only
17	74417154	Stud (Motor Cover)	6875813			1	List Only
18	74570030	Pan Head Screw with Washer	P334200115	M4X10(Chromate P-4)		8	List Only
19	79572401	Hex Soc Cap Screw	P330200014	M4X8		4	List Only

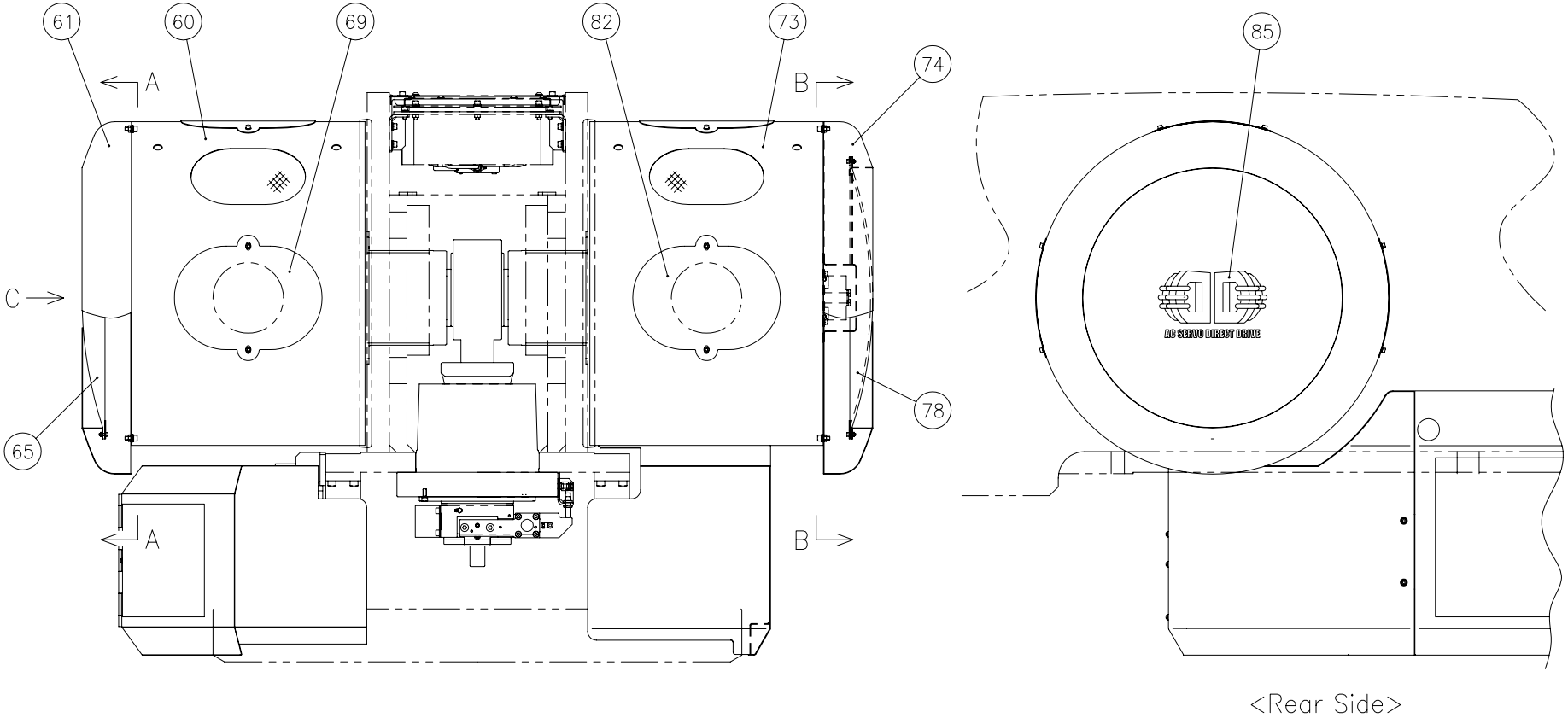

6879410

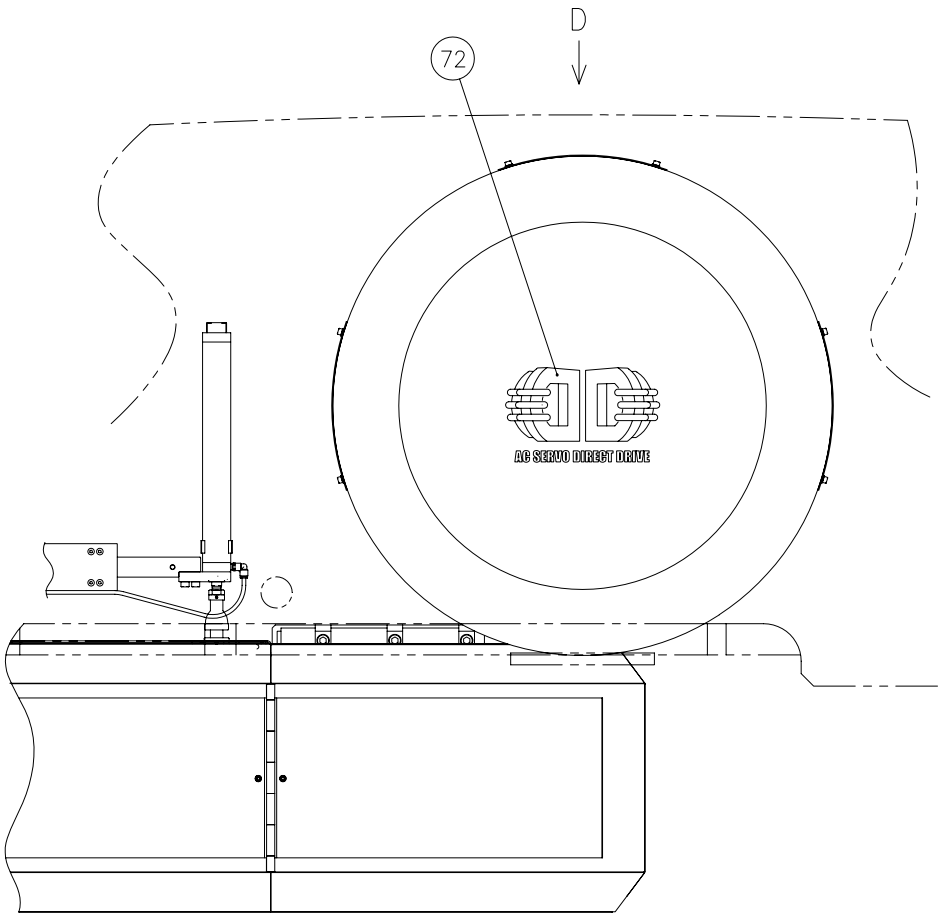

VIEW C
<Front Side>

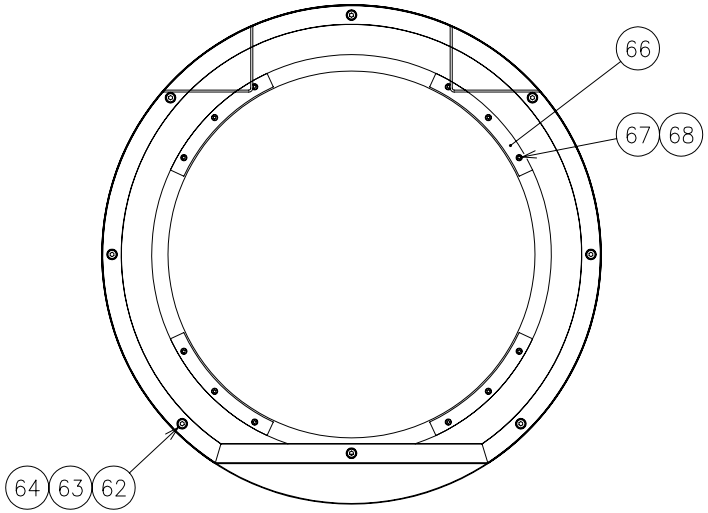

SECTION A–A
<Front Side>

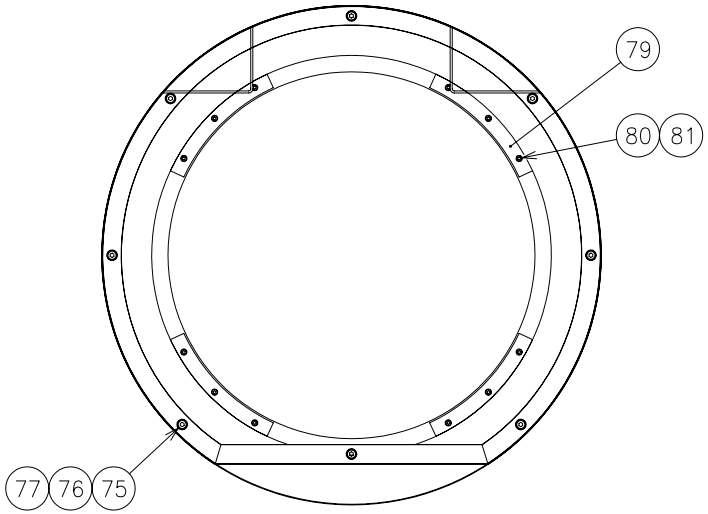

SECTION B–B
<Rear Side>

6879410

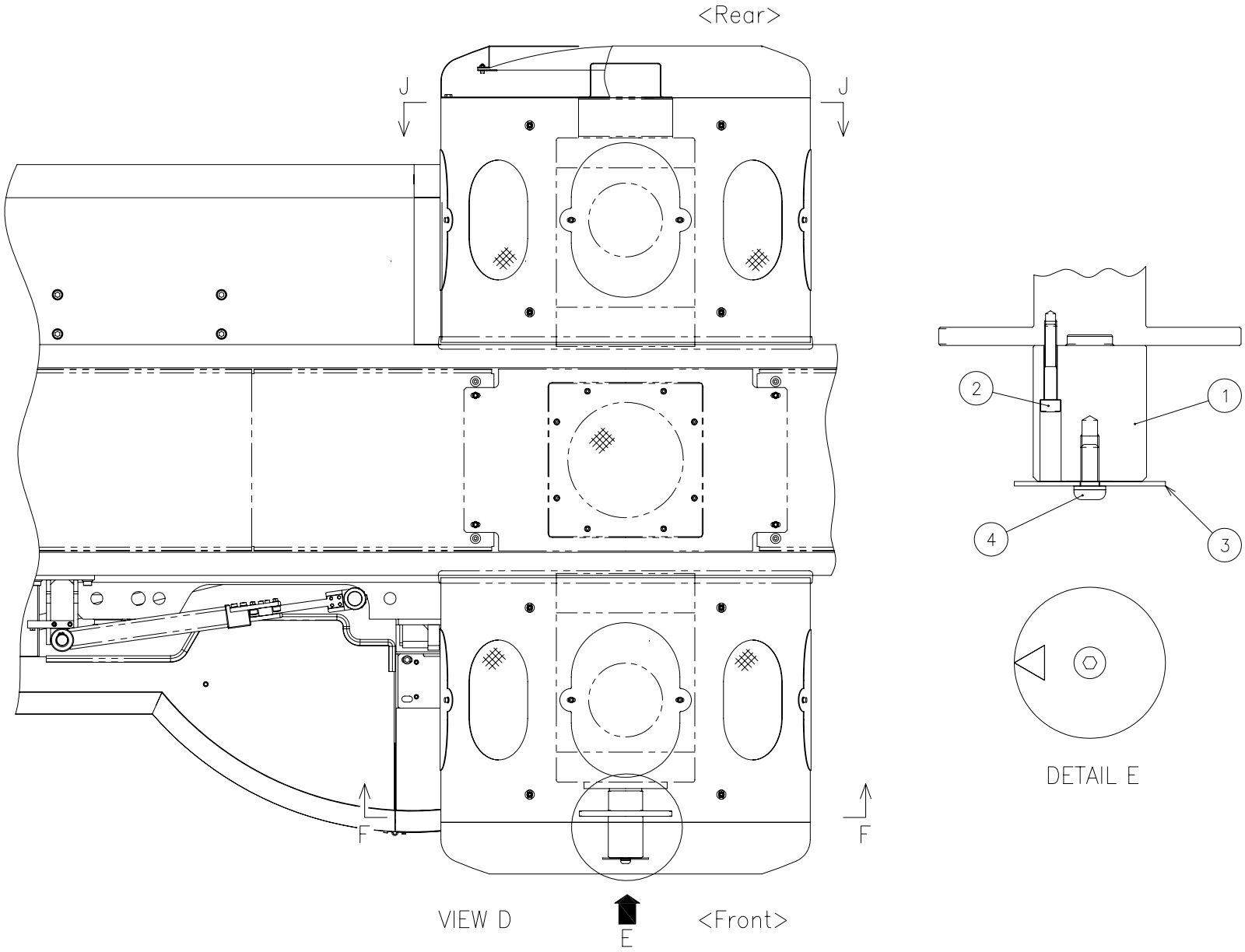
<Rear>
J
J
F
F
VIEW D
E
<Front>
2
1
4
3
DETAIL E
6879410

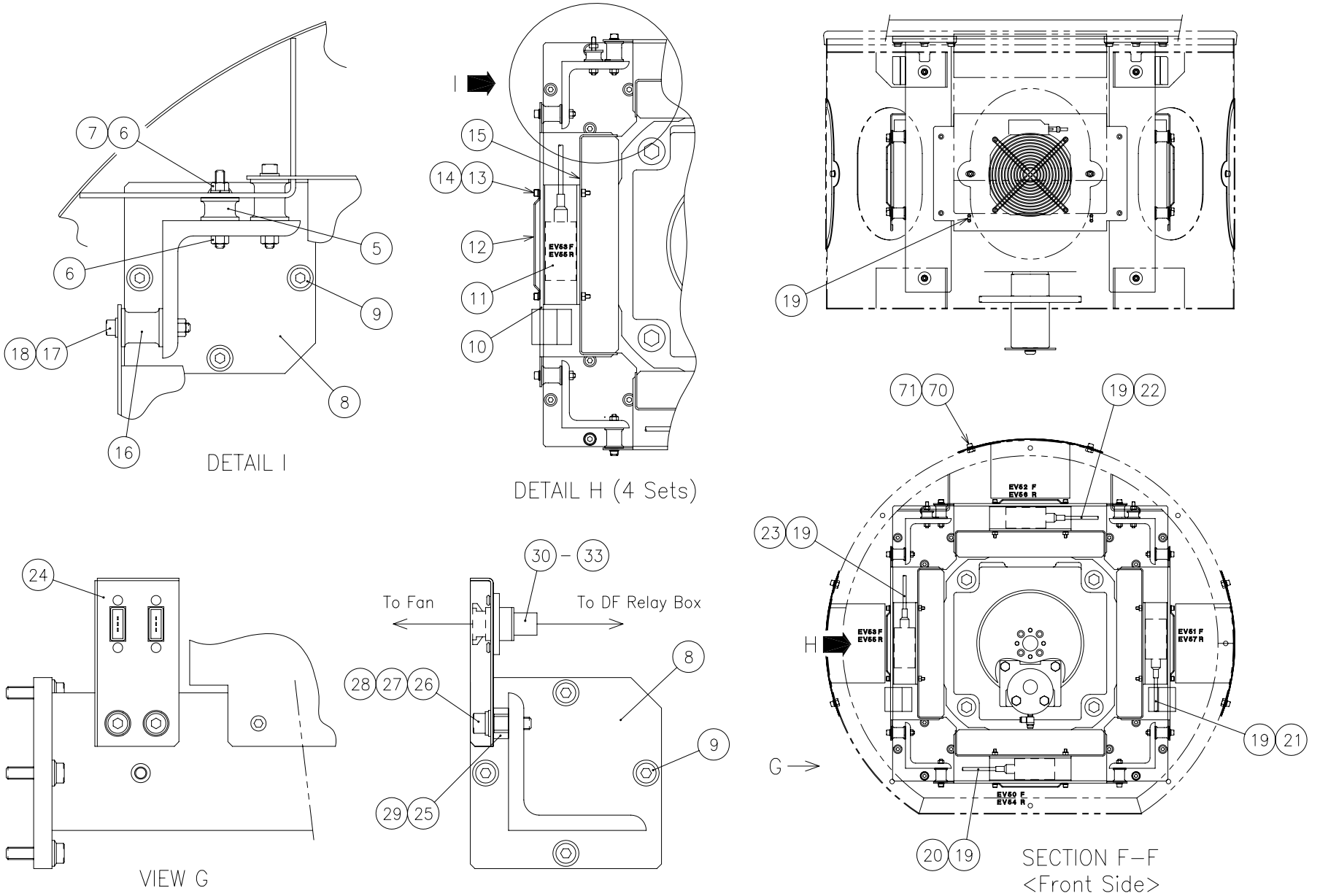
7
6
5
6
9
18
17
8
16
DETAIL I
I
15
14
13
12
11
10
EV53 F
EV55 R
DETAIL H (4 Sets)
19
71
70
19
22
EV52 F
EV56 R
23
19
H
EV53 F
EV55 R
EV51 F
EV57 R
19
21
G
EV50 F
EV54 R
20
19
SECTION F–F
<Front Side>
24
VIEW G
30 – 33
To Fan
To DF Relay Box
8
28
27
26
9
29
25

6879410

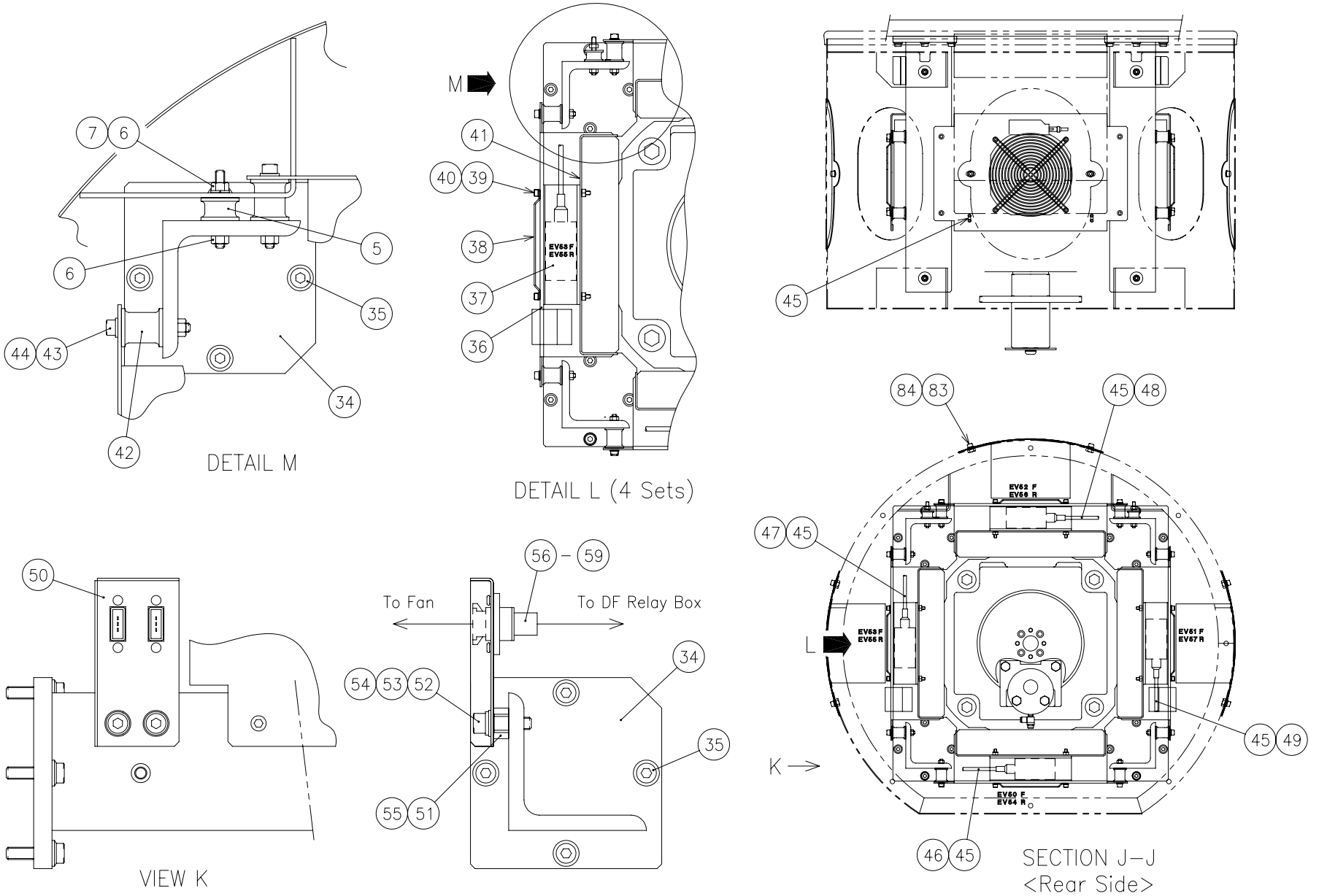
7
6
5
6
35
44
43
34
42
DETAIL M
M
41
40
39
38
37
36
EV53 F
EV55 R
DETAIL L (4 Sets)
45
84
83
45
48
EV52 F
EV56 R
47
45
L
EV53 F
EV55 R
EV51 F
EV57 R
45
49
K
EV50 F
EV54 R
46
45
SECTION J–J
<Rear Side>
50
VIEW K
56 – 59
To Fan
To DF Relay Box
34
54
53
52
35
55
51

6879410

Unit No. 8
Frame(8)

From Serial No.36102001 and after

Index	Code	Parts Name	Drawing No.	Type	Maker	Q'ty	Note
1	74415345	Pointer Base	6827285			1	
2	10443146	Hex Soc Cap Screw	P330230012	M8X50		4	
3	74382232	Indicator	6533019			1	
4	74380159	Button Head Screw	P334500025	M12X20		1	
5	73116544	Vibration Isolator	P382002031	KA-25	KURASHIKI KAKO	8	
6	31179404	Nut	P332000030	M6(Type-1)		16	
7	79564311	Spring Washer	P336050005	6		8	
8	74418336	Fan Bracket Base	6875284			4	
9	73114706	Flange Socket Bolt	P330468002	M8X30	NISSAN NEJI	16	
10	74415347	Fan Bracket	6827276			1	
11	74571231	Fan	P538002001	109-602	SANYO Electric	1	
12	74415338	Accessory For Fan	P538072013	109-619E	SANYO Electric	1	
13	79316115	Hex Soc Cap Screw	P330210022	M5X70		4	
14	31182981	Washer	P336000080	5(Regular Round)		4	
15	74415350	Air Guard	6827261			1	
16	74415349	Vibration Isolator	P382002065	RA-25-27H	KURASHIKI KAKO	16	
17	31183033	Hex Soc Cap Screw	P330220003	M6X10		16	
18	79565419	Washer	P336000005	6(Regular Round)		32	
19	74575246	Cable Band	P381058097	SKB-4M	KITAGAWA	12	

Index	Code	Parts Name	Drawing No.	Type	Maker	Q'ty	Note
20	74415969	Cable EV50-1	6870465			1	
21	74415970	Cable EV51-1	6870466			1	
22	74415971	Cable EV52-1	6870467			1	
23	74415972	Cable EV53-1	6870468			1	
24	74415353	Housing Plate	6828459			2	
25	74415354	Antivibration Rubber	6828458			2	
26	79568702	Hex Soc Cap Screw	P330230008	M8X30		4	
27	86610326	Spring Washer	P336050006	8		4	
28	79567109	Washer	P336000006	8(Regular Round)		4	
29	74415355	Collar	6827281			4	
30	74418337	Cable EV50	6875286			1	
31	74418338	Cable EV52	6875287			1	
32	74386505	Accessory For Connector	P862182002	900128-2	AMP	8	
33	79316430	Pan Head Screw	P334100015	M4X5		4	
34	74418336	Fan Bracket Base	6875284			4	
35	73114706	Flange Socket Bolt	P330468002	M8X30	NISSAN NEJI	16	
36	74415347	Fan Bracket	6827276			1	
37	74571231	Fan	P538002001	109-602	SANYO Electric	1	
38	74415338	Accessory For Fan	P538072013	109-619E	SANYO Electric	1	

Index	Code	Parts Name	Drawing No.	Type	Maker	Q'ty	Note
39	79316115	Hex Soc Cap Screw	P330210022	M5X70		4	
40	31182981	Washer	P336000080	5(Regular Round)		4	
41	74415350	Air Guard	6827261			1	
42	74415349	Vibration Isolator	P382002065	RA-25-27H	KURASHIKI KAKO	16	
43	31183033	Hex Soc Cap Screw	P330220003	M6X10		16	
44	79565419	Washer	P336000005	6(Regular Round)		32	
45	74575246	Cable Band	P381058097	SKB-4M	KITAGAWA	12	
46	74415973	Cable EV54-1	6870469			1	
47	74415974	Cable EV55-1	6870470			1	
48	74415950	Cable EV56-1	6870471			1	
49	74415951	Cable EV57-1	6870472			1	
50	74415353	Housing Plate	6828459			2	
51	74415354	Antivibration Rubber	6828458			2	
52	79568702	Hex Soc Cap Screw	P330230008	M8X30		4	
53	86610326	Spring Washer	P336050006	8		4	
54	79567109	Washer	P336000006	8(Regular Round)		4	
55	74415355	Collar	6827281			4	
56	74417165	Cable EV54	6874117			1	
57	74417166	Cable EV56	6874118			1	

From Serial No.36102001 and after

Index	Code	Parts Name	Drawing No.	Type	Maker	Q'ty	Note
58	74386505	Accessory For Connector	P862182002	900128-2	AMP	8	
59	79316430	Pan Head Screw	P334100015	M4X5		4	
60	74418339	Drive Cover (Cylindrical)	6875285 A			1	
61	74415356	Drive Cover (Cap)	6828452			1	
62	79564804	Hex Soc Cap Screw	P330230006	M8X20		8	
63	86610326	Spring Washer	P336050006	8		8	
64	79567109	Washer	P336000006	8(Regular Round)		8	
65	74415344	Drive Cover (Window)	6828453			1	
66	74415351	Window Support	6828454			4	
67	79316109	Hex Soc Cap Screw	P330210006	M5X15		12	
68	31182981	Washer	P336000080	5(Regular Round)		12	
69	74415918	Maintenance Cap (Drive Cover)	6829173			3	
70	79565201	Hex Soc Cap Screw	P330220004	M6X12		6	
71	79565419	Washer	P336000005	6(Regular Round)		6	
72	74417167	DD Mark 250	6170100			1	
73	74418339	Drive Cover (Cylindrical)	6875285 A			1	
74	74415356	Drive Cover (Cap)	6828452			1	
75	79564804	Hex Soc Cap Screw	P330230006	M8X20		8	
76	86610326	Spring Washer	P336050006	8		8	

Index	Code	Parts Name	Drawing No.	Type	Maker	Q'ty	Note
77	79567109	Washer	P336000006	8(Regular Round)		8	
78	74415344	Drive Cover (Window)	6828453			1	
79	74415351	Window Support	6828454			4	
80	79316109	Hex Soc Cap Screw	P330210006	M5X15		12	
81	31182981	Washer	P336000080	5(Regular Round)		12	
82	74415918	Maintenance Cap (Drive Cover)	6829173			3	
83	79565201	Hex Soc Cap Screw	P330220004	M6X12		6	
84	79565419	Washer	P336000005	6(Regular Round)		6	
85	74417167	DD Mark 250	6170100			1	

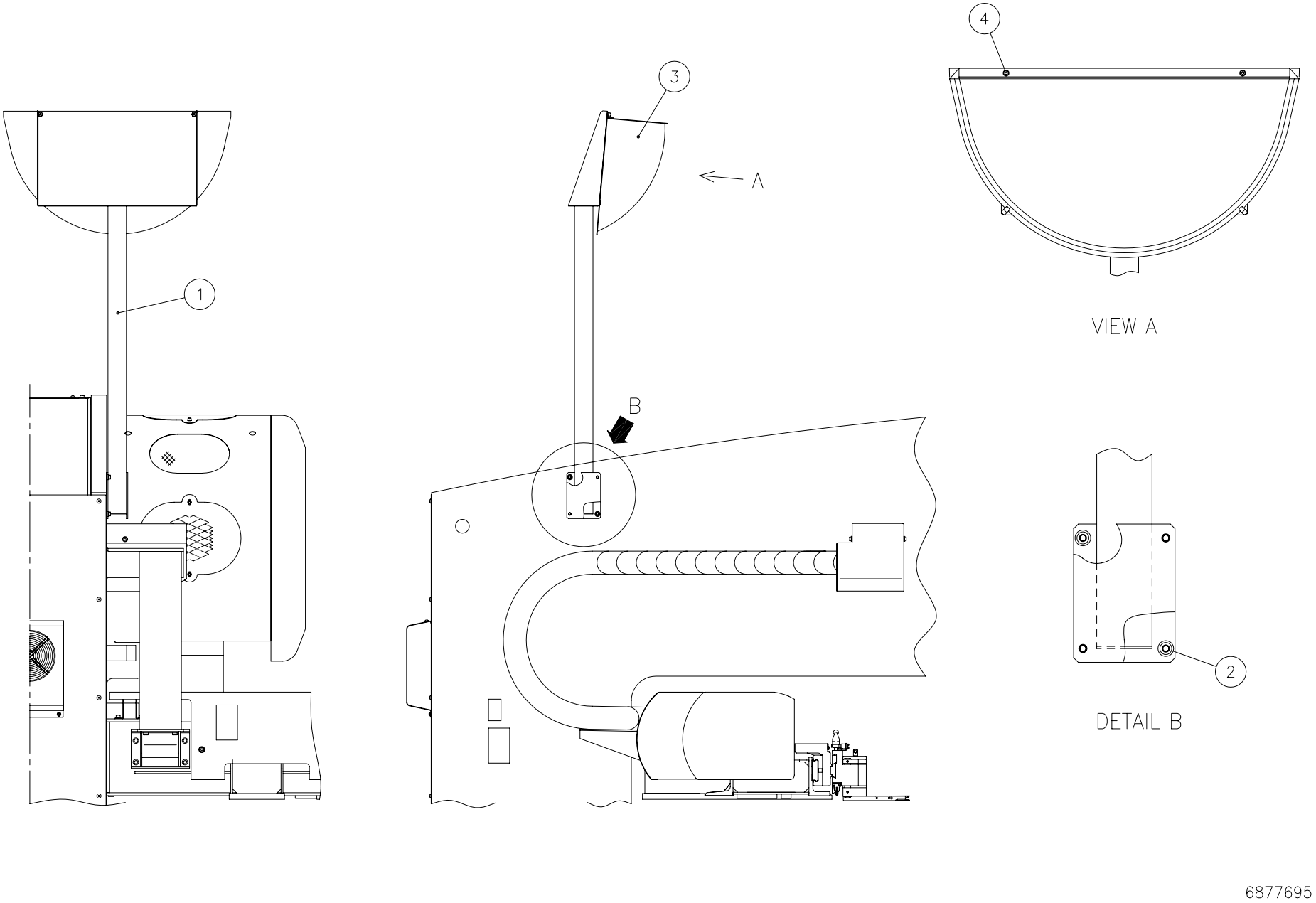
1
2
3
4
A
B
VIEW A
DETAIL B
6877695

Unit No. 9

Frame(9) From Serial No.36102001 and after

Index	Code	Parts Name	Drawing No.	Type	Maker	Q'ty	Note
1	74417170	Mirror Stand	6824665 A			1	
2	75420815	Flange Socket Bolt	P330468001	M8X20	NISSAN NEJI	4	
3	74415357	Curve Mirror	P379208002	HD-70	KOMY	1	
4	45252001	Flange Socket Bolt	P330460003	M6X15		2	

<List Only>

6880020	Name Plate Setting (English)	1 – 23
6825046	Serial Plate Ass'y (English)	24 25
6880022	Name Plate Ass'y (English)	26 – 51
6877427	Lubrication Plate (without P&F) (English)	52 53
6877702	Lubrication Plate (P&F) (English)	52 53
6824345	Lubrication Plate (4AI) (English)	54 55
6882351	Lubrication Plate (2AI) (English)	54 55
6824453	Lubrication Plate (C/R) (English)	56
6817913	Name Plate Setting (Chinese)	1 – 23
6825047	Serial Plate Ass'y (Chinese)	24 25
6880025A	Name Plate Ass'y (Chinese)	26 – 51
6817770	Lubrication Plate (without P&F) (Chinese)	52 53
6817775	Lubrication Plate (P&F) (Chinese)	52 53
6817914	Lubrication Plate (4AI) (Chinese)	54 55
6882354	Lubrication Plate (2AI) (Chinese)	54 55
6817778	Lubrication Plate (C/R) (Chinese)	56

Index	Code	Parts Name	Drawing No.	Type	Maker	Q'ty	Note
1	74415358	Name Plate (AMADA #140)	6634634			1	
2	74419231	Name Plate (Model)	6879632			1	
3	74300488	Legend Plate (X-axis Motor)	6502837			1	EXP
3	74419204	Legend Plate (X-axis Motor)	6817496			1	Chinese
4	74300490	Legend Plate (Y-axis Motor)	6502839			1	EXP
4	74419205	Legend Plate (Y-axis Motor)	6817497			1	Chinese
5	74300489	Legend Plate (T-axis Motor)	6502838			1	EXP
5	74419206	Legend Plate (T-axis Motor)	6817498			1	Chinese
6	74300977	Legend Plate (C-axis Motor)	6502763			1	EXP
6	74419207	Legend Plate (C-axis Motor)	6817499			1	Chinese
7	74415360	Legend Plate (A-axis Motor)	6903701			2	EXP
7	74419208	Legend Plate (A-axis Motor)	6817537			2	Chinese
8	74379098	Charging Mark	P360200003	JISB6015-80H		13	
9	74382540	Sticker		AS-K1001-C		7	
10	74700594	Legend Plate (Y Direction)(2)	6541165			1	
11	71130447	Legend Plate (Do Not Get On)	0840546			18	
12	74700596	Legend Plate (Foot Switch)	6541167			1	
13	36382827	Legend Plate (Caution)	6170009 A	AS-K1006		5	
14	74386340	Legend Plate (Pneumatic)	6045138 A			1	EXP

Index	Code	Parts Name	Drawing No.	Type	Maker	Q'ty	Note
14	74419461	Legend Plate (Pneumatic)	6817500			1	Chinese
15	74383831	Legend Plate (Main Pressure)	6593002			1	
16	74700583	Legend Plate (Y Direction)	1500049 A			1	
17	74417195	Legend Plate 2 (Caution)	680012702A			3	EXP
17	74419399	Legend Plate 2 (Caution)	6817502			3	Chinese
18	74388275	Legend Plate (X Direction)(2)	6597097			2	
19	74569592	Legend Plate (Warning)(1)	8636765			4	
20	74307485	Sticker (1)(Export)	6502726			1	
21	74307486	Sticker (2)(Export)	6502727			1	
22	74415373	Sticker (3)(Export)	6870224			1	
23	74569591	Timing Belt Sticker	6822269			1	EXP
23	74419209	Sticker (Timing Belt)	6817788			1	Chinese
24	74415920	Serial Plate	6826415 A			1	EXP
24	74419210	Serial Plate	6826405 C			1	Chinese
25	74379097	Rivet	P339070006	6X12(Round)Steel		4	
26	74300125	Legend Plate (Caution)	0820843			1	EXP
26	74419211	Legend Plate (Caution)	6817480 A			1	Chinese
27	36379029	Button Head Screw	P334500013	M6X10		4	
28	74300498	Legend Plate (Warning)(1)	6502817			6	EXP

Index	Code	Parts Name	Drawing No.	Type	Maker	Q'ty	Note
28	74419212	Legend Plate (Warning)(1) Ch.	6816791 A			6	Chinese
29	74700285	Drive Screw Rivet	P339100002	NO.2X4.8		4	
30	74326603	Blind Rivet	P339208001	NTA3-2	LOBTEX	20	
31	74300969	Legend Plate (Warning)(2)	6018112			2	EXP
31	74419213	Legend Plate (Warning)(2)	6816792 A			2	Chinese
32	74326603	Blind Rivet	P339208001	NTA3-2	LOBTEX	8	
33	74300973	Legend Plate (Warning)(3)	6018113			4	EXP
33	74419214	Legend Plate (Warning)(3)	6816793 A			4	Chinese
34	74700285	Drive Screw Rivet	P339100002	NO.2X4.8		6	
35	74326603	Blind Rivet	P339208001	NTA3-2	LOBTEX	18	
36	74300121	Legend Plate (Caution) ENG	0810618 A			1	EXP
36	74419215	Legend Plate (Caution)	6817490 A			1	Chinese
37	75410342	Legend Plate (Caution) ENG	6010842			1	EXP
37	74419216	Legend Plate (Caution)(AI)	6817491			1	Chinese
38	71362136	Legend Plate (Warning)(3)	6045924			2	EXP
38	74415924	Legend Plate (Warning)(3)	6816795			2	Chinese
39	74326603	Blind Rivet	P339208001	NTA3-2	LOBTEX	8	
40	74562911	Legend Plate (Balancer)(1)	7408811			1	EXP
40	74419217	Legend Plate (Balancer)(1)	6817539			1	Chinese

Index	Code	Parts Name	Drawing No.	Type	Maker	Q'ty	Note
41	74562915	Legend Plate (Balancer)(2)	7408812			1	EXP
41	74419218	Legend Plate (Balancer)(2)	6817540			1	Chinese
42	74571235	Legend Plate (Caution) E	0820851 A	(DO NOT LIFT HERE)		7	EXP
42	74419219	Legend Plate (Caution)	6817492			7	Chinese
43	74418342	Legend Plate (Lubrication)ENG	6878261			1	EXP
43	74419220	Legend Plate (Lubrication)Ch.	6817787			1	Chinese
44	74326603	Blind Rivet	P339208001	NTA3-2	LOBTEX	4	
45	74386362	Legend Plate (Warning)	6594566			1	EXP
45	74419221	Legend Plate (Warning)	6816794 A			1	Chinese
46	74700285	Drive Screw Rivet	P339100002	NO.2X4.8		4	
47	74389132	Legend Plate (Warning)(4)	6597086			1	EXP
47	74419222	Legend Plate (Warning)(4)	6816797 A			1	Chinese
48	74700285	Drive Screw Rivet	P339100002	NO.2X4.8		4	
49	74417208	Legend Plate (Y-Axis) ENG.	6877416	(Y AXIS BALL NUT)		1	EXP
49	74419223	Legend Plate (Y-Axis) Ch.	6817527			1	Chinese
50	74569595	Legend Plate (Y-Axis) ENG.	6822254	(Y AXIS GUIDE NUT)		2	EXP
50	74419224	Legend Plate (Y-Axis) Ch.	6817530			2	Chinese
51	74417213	Legend Plate (Lubrication) E	6877411	(LM GUIDE UNDER THE TABLE)		4	EXP
51	74419225	Legend Plate (Lubrication)	6817532			4	Chinese

From Serial No.36102001 and after

Index	Code	Parts Name	Drawing No.	Type	Maker	Q'ty	Note
52	74417217	Legend Plate (Lubrication) ENG	6877428			1	without P&F (EXP)
52	74419226	Legend Plate (Lubrication)	6817531			1	without P&F (Chinese)
52	74418346	Legend Plate (Lubrication) ENG	6877706			1	with P&F (EXP)
52	74419227	Legend Plate (Lubrication) Ch.	6817784			1	with P&F (Chinese)
53	74326603	Blind Rivet	P339208001	NTA3-2	LOBTEX	4	
54	74575053	Legend Plate (Lubrication) 4AI	6824446			1	4AI(EXP)
54	74419228	Legend Plate (Lubrication) 4AI	6817877			1	4AI(Chinese)
54	74419233	Legend Plate (Lubrication) 2AI	6882346			1	2AI(EXP)
54	74419229	Legend Plate (Lubrication) 2AI	6882349			1	2AI(Chinese)
55	74326603	Blind Rivet	P339208001	NTA3-2	LOBTEX	4	
56	74571241	Legend Plate (Lubrication) C/R	6822876			1	Slide (EXP)
56	74419230	Legend Plate (Lubrication) C/R	6817526			1	Slide (Chinese)

<List Only>

6880050	Name Plate Setting	1 – 22
6825046	Serial Plate Ass'y	23 24
6880052	Name Plate Ass'y (English)	25 – 34
6877427	Lubrication Plate (without P&F) (English)	35 36
6877702	Lubrication Plate (P&F) (English)	35 36
6824345	Lubrication Plate (4Al) (English)	37 38
6882351	Lubrication Plate (2Al) (English)	37 38
6824453	Lubrication Plate (C/R) (English)	39
6877693	Name Plate Ass'y (CE)	40 – 42
6877694	Name Plate Ass'y (Number Plate)	43 44
6880053	Name Plate Ass'y (French)	25 – 34
6877429	Lubrication Plate (without P&F) (French)	35 36
6877703	Lubrication Plate (P&F) (French)	35 36
6824346	Lubrication Plate (4Al) (French)	37 38
6882352	Lubrication Plate (2Al) (French)	37 38
6824454	Lubrication Plate (C/R) (French)	39

<List Only>

6880051	Name Plate Ass'y (German)	25 – 34
6877425	Lubrication Plate (without P&F) (German)	35 36
6877701	Lubrication Plate (P&F) (German)	35 36
6824344	Lubrication Plate (4Al) (German)	37 38
6882350	Lubrication Plate (2Al) (German)	37 38
6824452	Lubrication Plate (C/R) (German)	39
6880054	Name Plate Ass'y (Italian)	25 – 34
6877431	Lubrication Plate (without P&F) (Italian)	35 36
6877704	Lubrication Plate (P&F) (Italian)	35 36
6824347	Lubrication Plate (4Al) (Italian)	37 38
6882353	Lubrication Plate (2Al) (Italian)	37 38
6824455	Lubrication Plate (C/R) (Italian)	39

Index	Code	Parts Name	Drawing No.	Type	Maker	Q'ty	Note
1	74415358	Name Plate (AMADA #140)	6634634			1	
2	74419231	Name Plate (Model)	6879632			1	
3	74300488	Legend Plate (X-axis Motor)	6502837			1	
4	74300490	Legend Plate (Y-axis Motor)	6502839			1	
5	74300489	Legend Plate (T-axis Motor)	6502838			1	
6	74300977	Legend Plate (C-axis Motor)	6502763			1	
7	74415360	Legend Plate (A-axis Motor)	6903701			2	
8	74379098	Charging Mark	P360200003	JISB6015-80H		13	
9	74382540	Sticker		AS-K1001-C		7	
10	74700594	Legend Plate (Y Direction)(2)	6541165			1	
11	71130447	Legend Plate (Do Not Get On)	0840546			18	
12	74700596	Legend Plate (Foot Switch)	6541167			1	
13	36382827	Legend Plate (Caution)	6170009 A	AS-K1006		5	
14	74386340	Legend Plate (Pneumatic)	6045138 A			1	
15	74383831	Legend Plate (Main Pressure)	6593002			1	
16	74700583	Legend Plate (Y Direction)	1500049 A			1	
17	74388275	Legend Plate (X Direction)(2)	6597097			2	
18	74569592	Legend Plate (Warning)(1)	8636765			4	
19	74307485	Sticker (1)(Export)	6502726			1	

Index	Code	Parts Name	Drawing No.	Type	Maker	Q'ty	Note
20	74307486	Sticker (2)(Export)	6502727			1	
21	74415373	Sticker (3)(Export)	6870224			1	
22	74569591	Timing Belt Sticker	6822269			1	
23	74415920	Serial Plate	6826415 A			1	
24	74379097	Rivet	P339070006	6X12(Round)Steel		4	
25	74300121	Legend Plate (Caution) ENG	0810618 A			1	English
25	74300475	Legend Plate (Caution) FRA	6502815			1	French
25	74300474	Legend Plate (Caution) GER	6502785			1	German
25	74300473	Legend Plate (Caution) ITA	6502755			1	Italian
26	75410342	Legend Plate (Caution) ENG	6010842			1	English
26	74388610	Legend Plate (Caution) FRA	6593343			1	French
26	75419064	Legend Plate (Caution) GER	6046712			1	German
26	75419066	Legend Plate (Caution) ITA	6046722			1	Italian
27	74562911	Legend Plate (Balancer)(1)	7408811			1	English
27	74562914	Legend Plate (Balancer)(1)	7408831			1	French
27	74562913	Legend Plate (Balancer)(1)	7408826			1	German
27	74562912	Legend Plate (Balancer)(1)	7408821			1	Italian
28	74562915	Legend Plate (Balancer)(2)	7408812			1	English
28	74562918	Legend Plate (Balancer)(2)	7408832			1	French

Index	Code	Parts Name	Drawing No.	Type	Maker	Q'ty	Note
28	74417201	Legend Plate (Balancer)(2)	7408827 A			1	German
28	74562916	Legend Plate (Balancer)(2)	7408822			1	Italian
29	74571235	Legend Plate (Caution) E	0820851 A	(DO NOT LIFT HERE)		7	English
29	74571237	Legend Plate (Caution)	6502834 A			7	French
29	74571236	Legend Plate (Caution)	6502804 A			7	German
29	74572204	Legend Plate (Caution)	6502774 A			7	Italian
30	74418342	Legend Plate (Lubrication)ENG	6878261			1	English
30	74418343	Legend Plate (Lubrication)FRA	6878262			1	French
30	74418341	Legend Plate (Lubrication)GER	6878260			1	German
30	74418344	Legend Plate (Lubrication)ITA	6878263			1	Italian
31	74326603	Blind Rivet	P339208001	NTA3-2	LOBTEX	4	
32	74417208	Legend Plate (Y-Axis) ENG.	6877416	(Y AXIS BALL NUT)		1	English
32	74417209	Legend Plate (Y-Axis) FRA.	6877417			1	French
32	74417207	Legend Plate (Y-Axis) GER.	6877415			1	German
32	74417210	Legend Plate (Y-Axis) ITA.	6877418			1	Italian
33	74569595	Legend Plate (Y-Axis) ENG.	6822254	(Y AXIS GUIDE NUT)		2	English
33	74569596	Legend Plate (Y-LM) FRA.	6822266			2	French
33	74571238	Legend Plate (Y-LM) GER.	6822262			2	German
33	74569594	Legend Plate (Y-LM) ITA.	6822258			2	Italian

Index	Code	Parts Name	Drawing No.	Type	Maker	Q'ty	Note
34	74417213	Legend Plate (Lubrication) E	6877411	(LM GUIDE UNDER THE TABLE)		4	English
34	74417214	Legend Plate (Lubrication) F	6877412			4	French
34	74417212	Legend Plate (Lubrication) G	6877410			4	German
34	74417215	Legend Plate (Lubrication) I	6877413			4	Italian
35	74417217	Legend Plate (Lubrication) ENG	6877428			1	without P&F (English)
35	74417218	Legend Plate (Lubrication) FRA	6877430			1	without P&F (French)
35	74417216	Legend Plate (Lubrication) GER	6877426			1	without P&F (German)
35	74417219	Legend Plate (Lubrication) ITA	6877432			1	without P&F (Italian)
35	74418346	Legend Plate (Lubrication) ENG	6877706			1	with P&F (English)
35	74418347	Legend Plate (Lubrication) FRA	6877707			1	with P&F (French)
35	74418345	Legend Plate (Lubrication) GER	6877705			1	with P&F (German)
35	74418348	Legend Plate (Lubrication) ITA	6877708			1	with P&F (Italian)
36	74326603	Blind Rivet	P339208001	NTA3-2	LOBTEX	4	
37	74575053	Legend Plate (Lubrication) 4AI	6824446			1	4AI(English)
37	74575054	Legend Plate (Lubrication) 4AI	6824447			1	4AI(French)
37	74419236	Legend Plate (Lubrication) 4AI	6824445 A			1	4AI(German)
37	74575055	Legend Plate (Lubrication) 4AI	6824448			1	4AI(Italian)
37	74419233	Legend Plate(Lubrication 2AI)E	6882346			1	2AI(English)
37	74419234	Legend Plate(Lubrication 2AI)F	6882347			1	2AI(French)

From Serial No.36102001 and after

Index	Code	Parts Name	Drawing No.	Type	Maker	Q'ty	Note
37	74419232	Legend Plate(Lubrication 2AI)G	6882345			1	2AI(German)
37	74419235	Legend Plate(Lubrication 2AI)I	6882348			1	2AI(Italian)
38	74326603	Blind Rivet	P339208001	NTA3-2	LOBTEX	4	
39	74571241	Legend Plate (Lubrication) C/R	6822876			1	Slide (English)
39	74571242	Legend Plate (Lubrication) C/R	6822878			1	Slide (French)
39	74575058	Legend Plate (Lubrication) C/R	6822877			1	Slide (German)
39	74575059	Legend Plate (Lubrication) C/R	6822879			1	Slide (Italian)
40	74722554	Legend Plate (Ear Protector)	6576696			1	
41	10378703	CE Mark Plate	1279130			1	
42	74700285	Drive Screw Rivet	P339100002	NO.2X4.8		4	
43	74386342	Number Plate	6593004 B			1	
44	74379097	Rivet	P339070006	6X12(Round)Steel		4	

From Serial No.36102001 and after

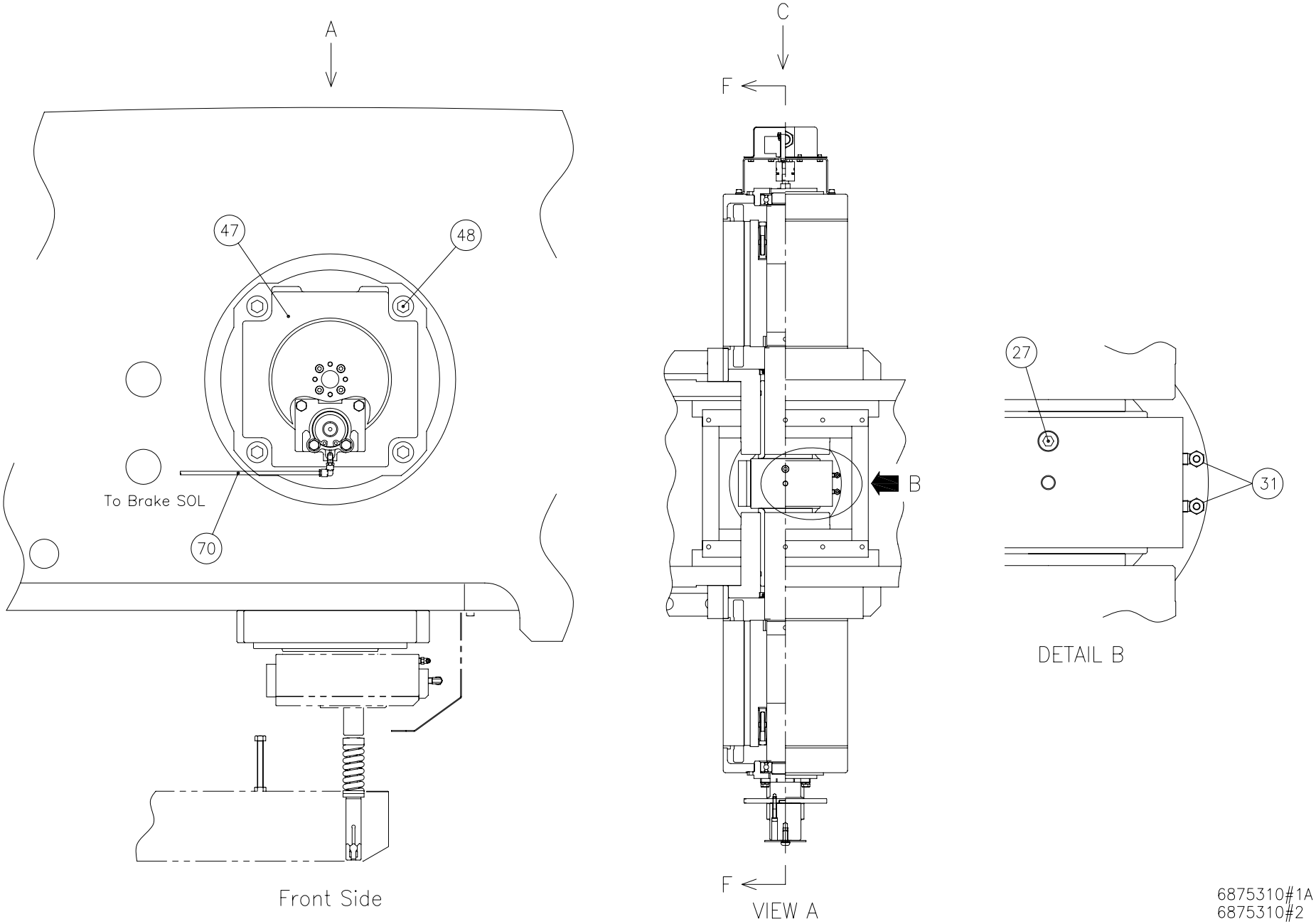

From Serial No.36102001 and after

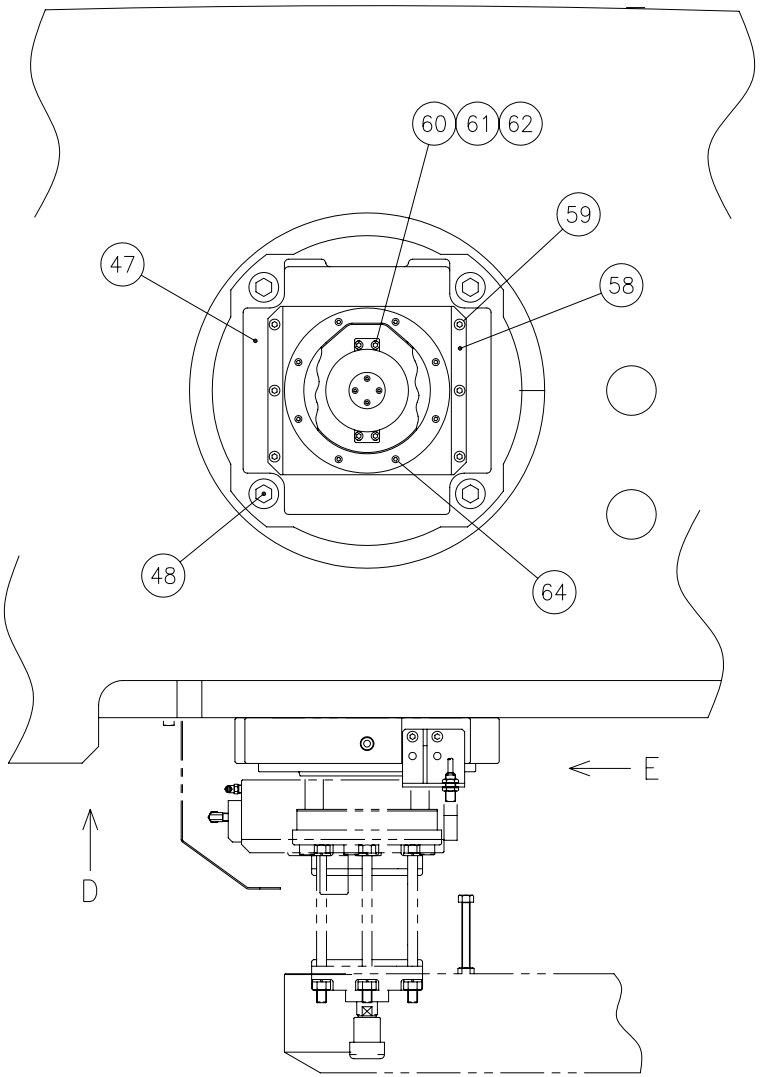

Rear Side
VIEW C

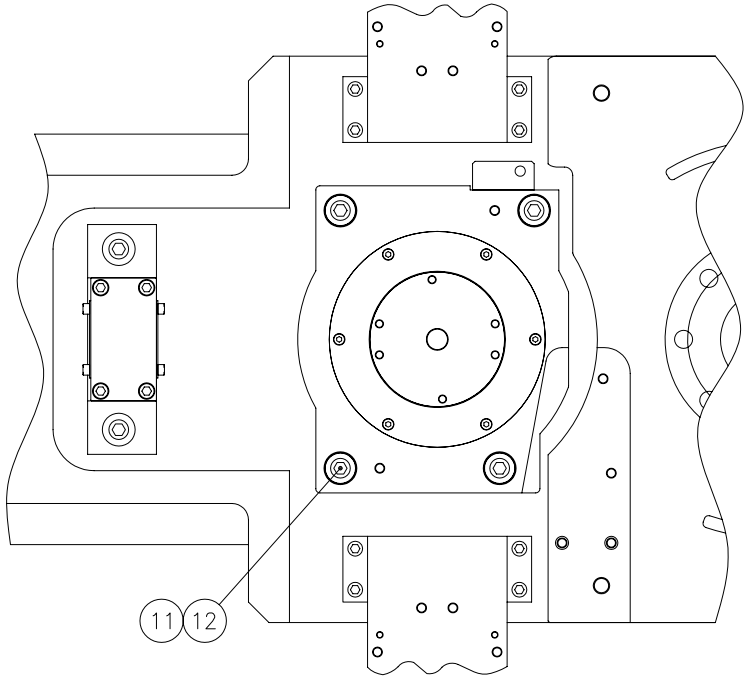

VIEW D

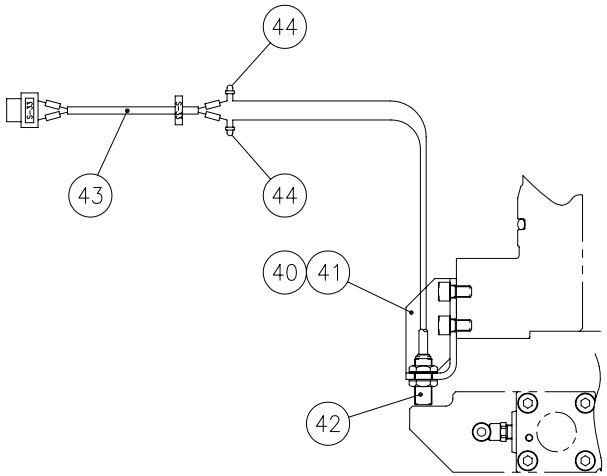

VIEW E

6875310#1A
6875310#2

From Serial No.36102001 and after

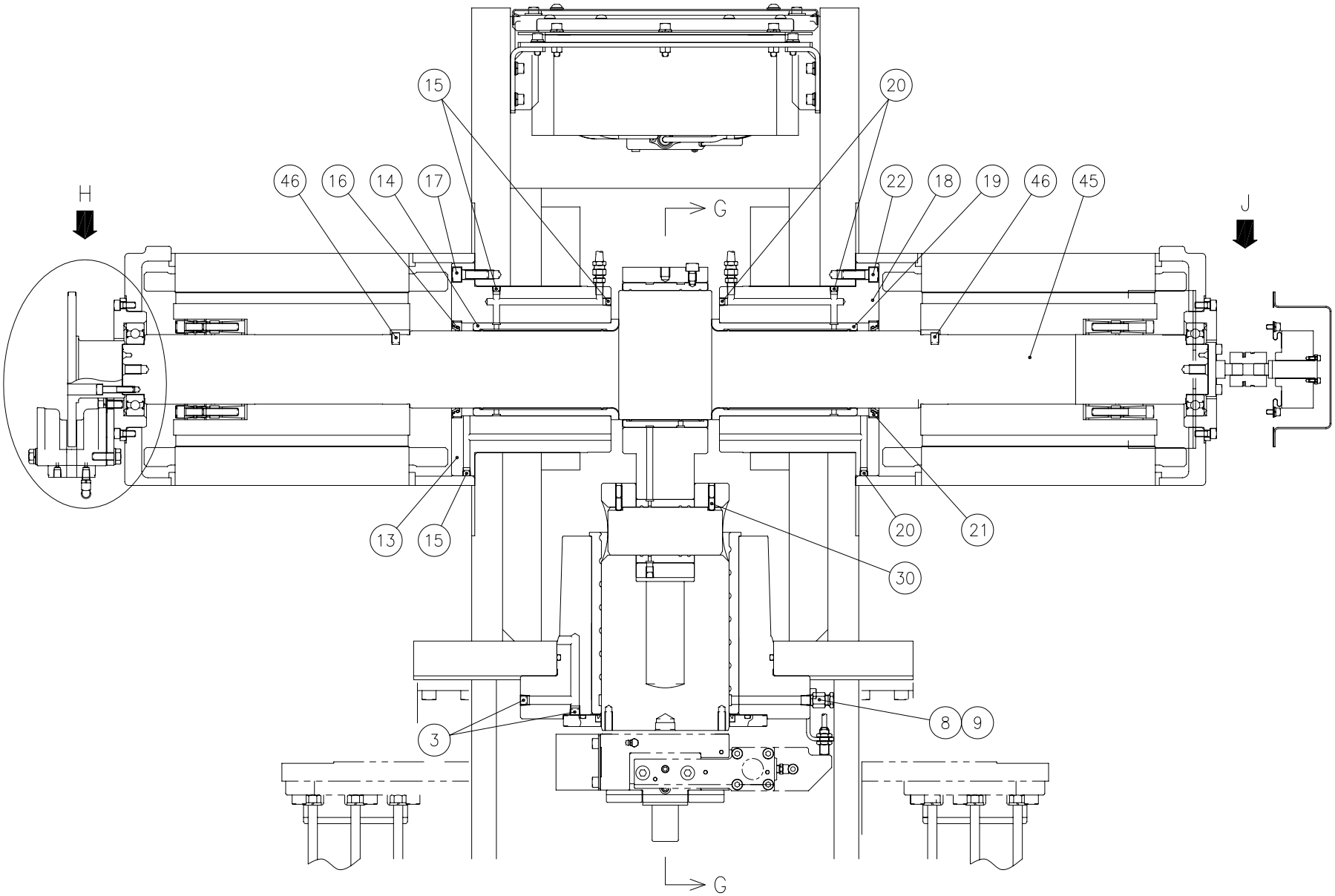

SECTION F–F

6875310#1A
6875310#2

From Serial No.36102001 and after

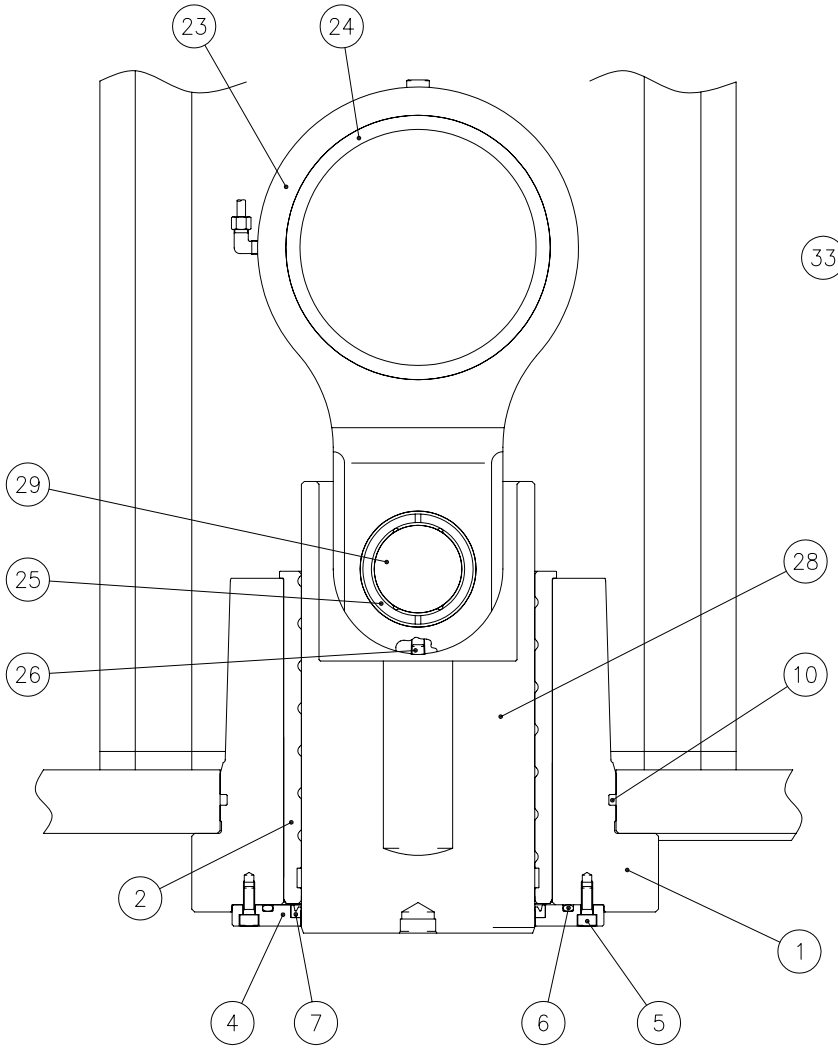

SECTION G–G

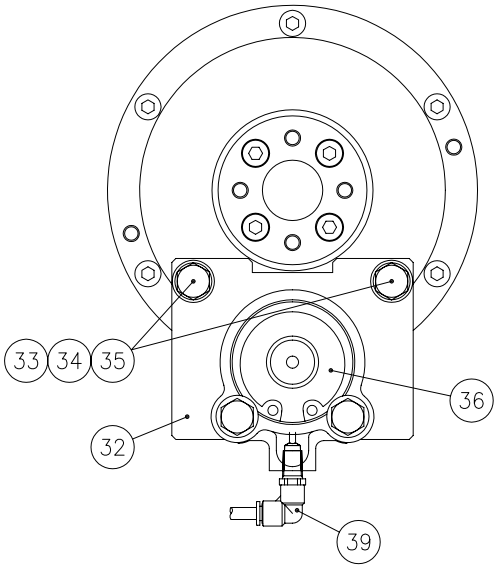

SECTION I–I

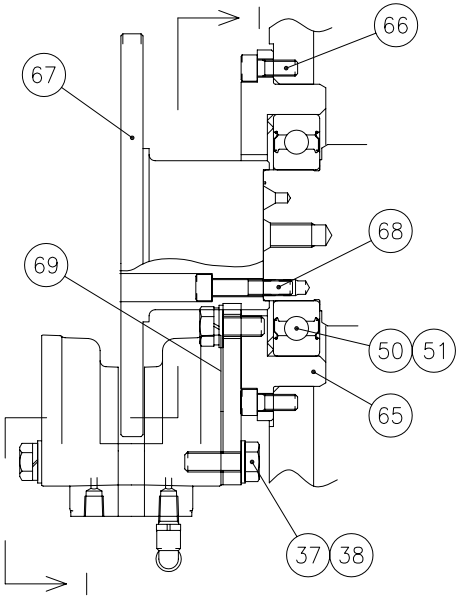

DETAIL H

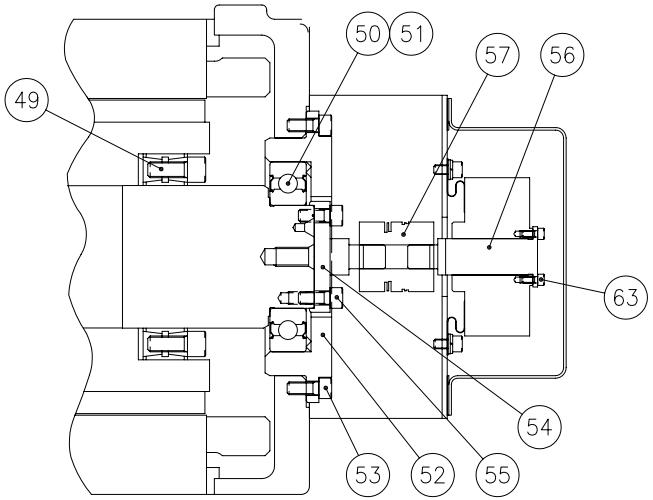

DETAIL J

6875310#1A
6875310#2

From Serial No.36102001 and after

Index	Code	Parts Name	Drawing No.	Type	Maker	Q'ty	Note
1	74418352	RAM Guide	6829541 A			1	
2	74415382	RAM Guide Bushing	6828462 A			1	
3	36327821	Plug For Piping	P580208002	GM-1/4	GOSHO Works	2	
4	74415384	RAM Guide Cover	6812528			1	
5	79564804	Hex Soc Cap Screw	P330230006	M8X20		6	
6	74418353	O Ring	P590012037	1A-G210	NOK	1	
7	74572356	Piston Packing	P590402046	USH-165	NOK	1	
8	74415537	Hose Adapter	QZZ025757	8021RG02H14	BRIDGESTON	1	
9	74722884	Bush For Piping	P580013001	M-1/4X1/8	BAN SS	1	
10	74418354	O Ring	P590012043	1A-G270	NOK	1	
11	74302325	Quenching Washer (M16)	0811632 A			4	
12	74535204	Hex Soc Cap Screw	P330260037	M16X65		4	
13	74415380	Front Crankshaft Support	6826084 B			1	
14	74417234	Crank Bushing	6826003 B			1	
15	74702340	Plug For Piping	P580208001	GM-1/8	GOSHO Works	3	
16	74380111	Oil Seal	P590102016	SB10012513	NOK	1	
17	36110743	Hex Soc Cap Screw	P330250006	M12X35		6	
18	74415383	Rear Crankshaft Bearing	6826215 B			1	
19	74417234	Crank Bushing	6826003 B			1	

Index	Code	Parts Name	Drawing No.	Type	Maker	Q'ty	Note
20	74702340	Plug For Piping	P580208001	GM-1/8	GOSHO Works	3	
21	74380111	Oil Seal	P590102016	SB10012513	NOK	1	
22	36110743	Hex Soc Cap Screw	P330250006	M12X35		6	
23	74415013	Connecting Rod	6828463			1	
24	74415014	Connecting Bushing	6828464			1	
25	74415015	RAM Pin Bushing	6828465			1	
26	74702340	Plug For Piping	P580208001	GM-1/8	GOSHO Works	1	
27	74301206	Bolt	0490233 B			1	
28	74415379	RAM	6826026			1	
29	74563622	RAM Pin	6597994			1	
30	74722726	Socket Set Screw	P330550039	M8X15(Flat-end)		4	
31	74702342	Lubricating Pipe Fitting	P589505005	RK865631	IHI	2	
32	74415389	Disc Brake Bracket	6828470			1	
33	74377140	Bolt	P330040005	M10X30		2	
34	79564811	Spring Washer	P336050007	10		2	
35	86611626	Washer	P336000007	10(Regular Round)		2	
36	74417236	Pneumatic Disc Brake	7831568		YUSHIN	1	
37	79565219	Bolt	P330040004	M10X25		2	
38	86611626	Washer	P336000007	10(Regular Round)		2	

Index	Code	Parts Name	Drawing No.	Type	Maker	Q'ty	Note
39	74310045	Instant Fitting	P586564001	EL6-PT1/8	NITTA MOORE	1	
40	74415391	Proximity Switch Bracket	6828487			1	
41	79565423	Hex Soc Cap Screw	P330230004	M8X15		2	
42	74387398	Proximity Switch	P829003016	FL7M-3J6HD(2M)	YAMATAKE	1	
43	74810066	Cable S-33	6875317 A			1	
44	74382938	Terminal	P869150001	CE-1		2	
45	74418356	Driving Shaft	6829422 A			1	
46	74415021	Parallel Pin	P337054110	MSTM10-15	MISUMI	2	
47	74418357	Servo Motor	7834120 A		NS Engineering	1	
48	64103637	Hex Soc Cap Screw	P330280014	M24X120		8	
49	74418358	Shaft Clamp Element	P432308033	TAS3012-90X130	SHI	2	
50	74415028	Bearing	7830830	6213DDUCM	NSK	2	
51	74415031	Wave Washer	P336178018	BWW-6311	OCHIAI	4	
52	74415167	Bearing Retainer (1)	6828466			1	
53	79564804	Hex Soc Cap Screw	P330230006	M8X20		6	
54	74415169	Encoder Shaft (1)	6828473			1	
55	79564804	Hex Soc Cap Screw	P330230006	M8X20		4	
56	74415171	Encoder Shaft (2)	6828467			1	
57	74415386	Coupling	P432178009	FEF70W-15CX15C	TSUBAKIMOTO CHAIN	1	

From Serial No.36102001 and after

Index	Code	Parts Name	Drawing No.	Type	Maker	Q'ty	Note
58	74415387	Encoder Bracket	6827144			1	
59	79565423	Hex Soc Cap Screw	P330230004	M8X15		6	
60	79565201	Hex Soc Cap Screw	P330220004	M6X12		4	
61	79564311	Spring Washer	P336050005	6		4	
62	79565419	Washer	P336000005	6(Regular Round)		4	
63	79574601	Hex Soc Cap Screw	P330200015	M4X10		4	
64	79573416	Hex Soc Cap Screw	P330210003	M5X10		8	
65	74415168	Bearing Retainer (2)	6828468			1	
66	79564804	Hex Soc Cap Screw	P330230006	M8X20		6	
67	74415388	Disk Shaft	6828469			1	
68	36367625	Hex Soc Cap Screw	P330230010	M8X40		4	
69	74415390	Shim	6828471			1	
70	71371426	Plastic Hose	P230222133	N2-4-6X4(Black)-2.2M	NITTA MOORE	1	

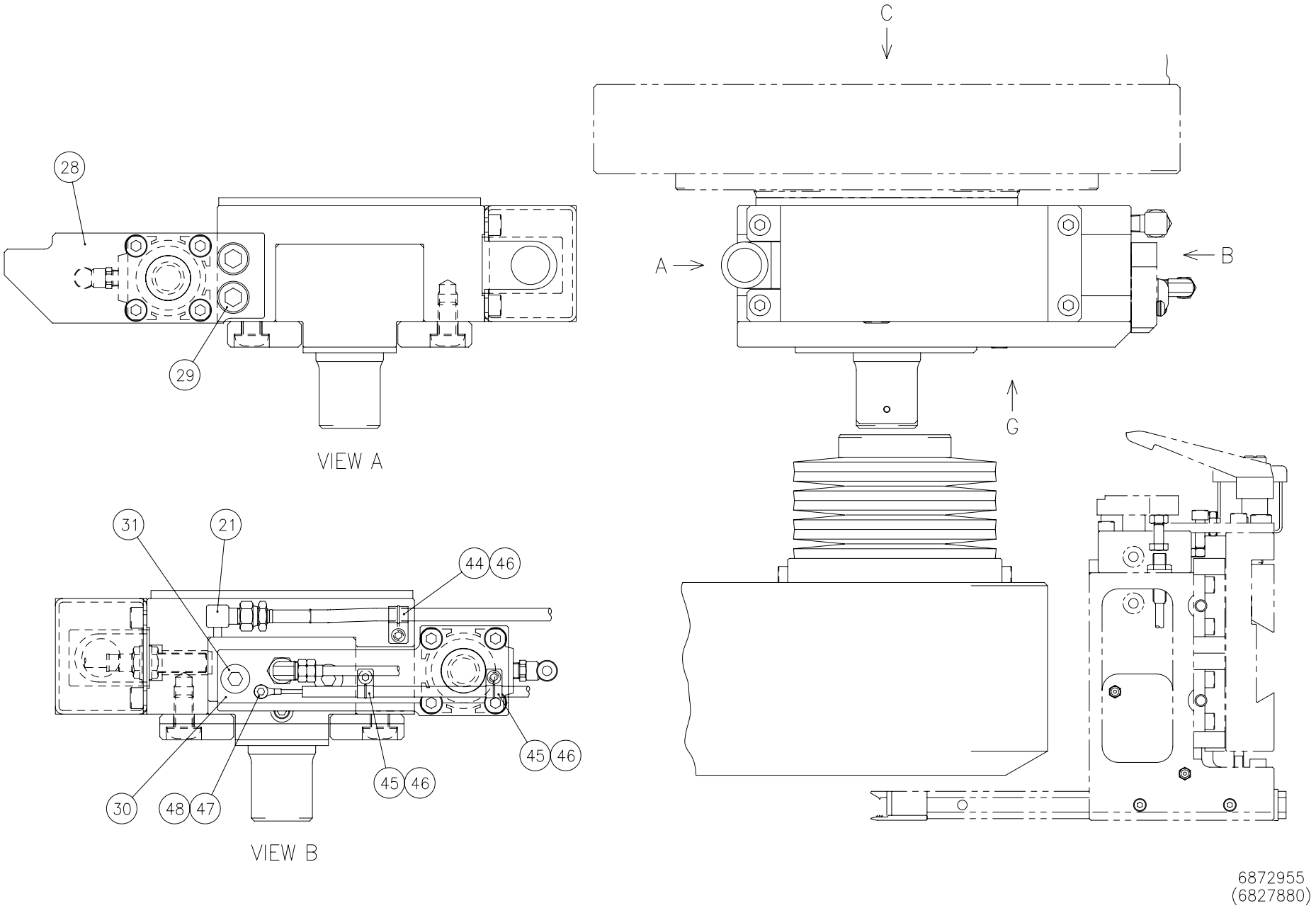
C
28
29
A
B
G
VIEW A
31
21
44
46
45
46
45
46
30
48
47
VIEW B
6872955
(6827880)

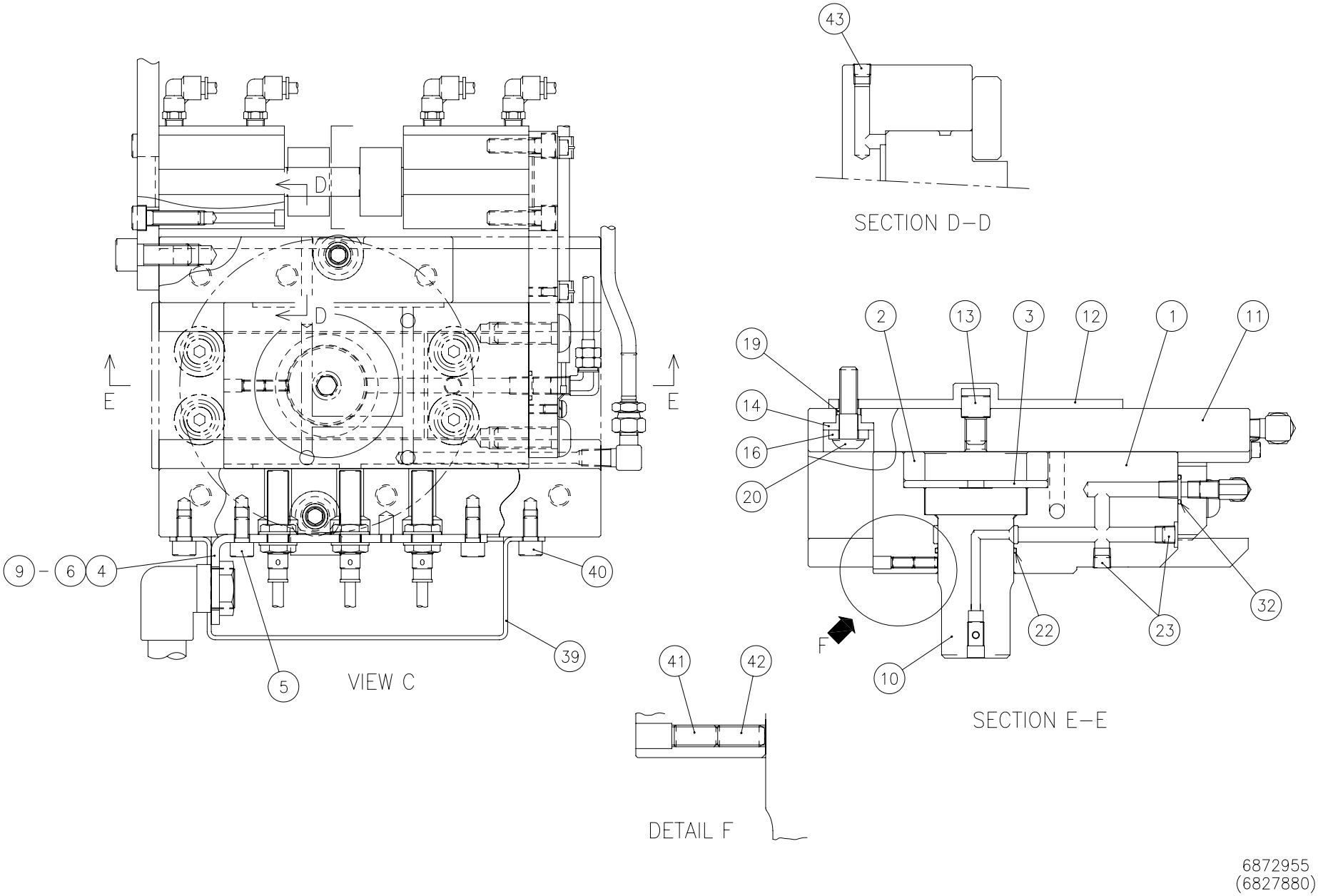
43
SECTION D–D
D
D
E
E
9
6
4
40
39
5
VIEW C
2
13
3
12
1
11
19
14
16
20
32
22
23
10
F
SECTION E–E
41
42
DETAIL F
6872955
(6827880)

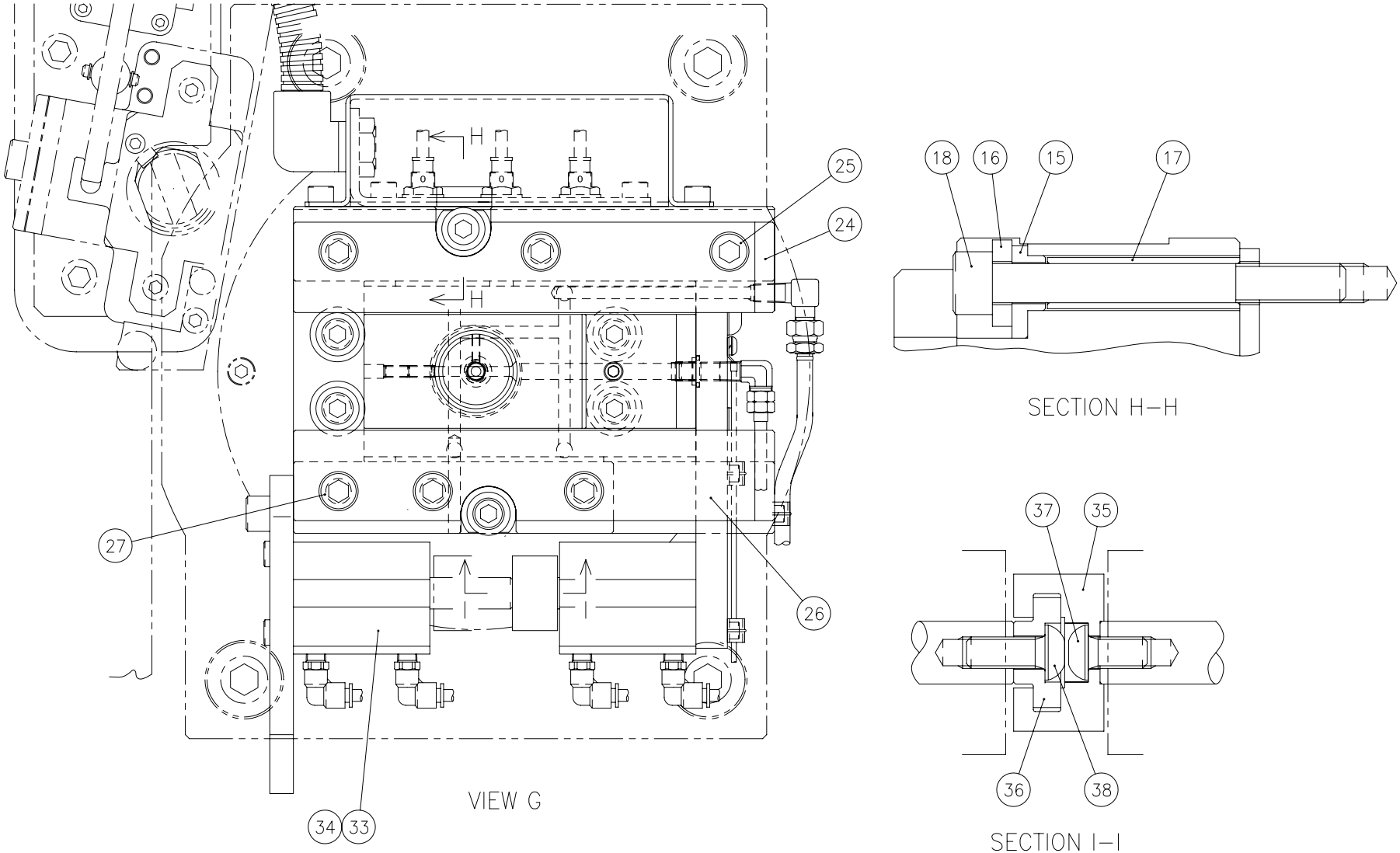

6872955
(6827880)

From Serial No.36102001 and after

Index	Code	Parts Name	Drawing No.	Type	Maker	Q'ty	Note
1	74419237	Punch Holder	6810491 C			1	
2	74722452	Backup Plate	6575873 B			1	
3	75410921	Shear Plate	6048199			1	
4	74563685	Proximity Switch Bracket	6810499			1	
5	79565423	Hex Soc Cap Screw	P330230004	M8X15		4	
6	74569978	Cable S-1 (1)	6812955 A			1	
7	74417264	Proximity Switch	7833065 A	FL7M-2J6D-911	YAMATAKE	3	
8	74382938	Terminal	P869150001	CE-1		6	
9	10560435	Cable Band	P381058011	CV-100N	SHIBAKEI	4	
10	74418361	Punch (0)	6872961			1	(0)
10	74418359	Punch (-1)	6872957			1	(-1)
10	74418360	Punch (-0.5)	6872959			1	(-0.5)
10	74418362	Punch (+0.5)	6872963			1	(+0.5)
10	74418363	Punch (+1)	6872965			1	(+1)
11	74417258	Punch Holder Guide	6872998			1	
12	74302623	RAM Isolating Plate	0822035 B			1	
13	74379182	Locating Pin	6575880			1	
14	74722455	Insulating Washer (A)	6575878			4	
15	74722456	Insulating Washer (B)	6575879			2	

From Serial No.36102001 and after

Index	Code	Parts Name	Drawing No.	Type	Maker	Q'ty	Note
16	74306022	Washer (M10)	0827013 B			6	
17	74302804	Collar (L)	0822052			2	
18	74563674	Hex Soc Cap Screw	P330243015	M10X90	SPS/UNBRAKO	2	
19	74302805	Collar (S)	0822053			4	
20	74716054	Button Head Screw	P334513006	M10X40LOC-WEL	SPS/UNBRAKO	4	
21	74569729	Hose Adapter	P589222237	1033-PT1/8-PF1/8	Yokohama Rubber	1	
22	74723012	O Ring	P590032034	S42	NOK	2	
23	74722926	Plug For Piping	P580208020	GDL-1/8	GOSHO Works	3	
24	74417259	Guide Rail (F)	6872996			1	
25	74380159	Button Head Screw	P334500025	M12X20		3	
26	74417260	Guide Rail (R)	6872997			1	
27	74380159	Button Head Screw	P334500025	M12X20		3	
28	74415417	Cylinder Bracket	6826289			1	
29	36367655	Hex Soc Cap Screw	P330250005	M12X30		2	
30	74417261	Punch Holder Bracket	6815249 A			1	
31	74569695	Button Head Screw	P334500066	M12X35		2	
32	10560009	O Ring	P590000012	P12		1	
33	74417262	Air Cylinder (Compact Type)	7832944 A	SSD-40-40	CKD	2	
34	79568702	Hex Soc Cap Screw	P330230008	M8X30		8	

From Serial No.36102001 and after

Index	Code	Parts Name	Drawing No.	Type	Maker	Q'ty	Note
35	74563683	Joint (A)	6810497			1	
36	74563684	Joint (B)	6810498			1	
37	10569021	Button Head Screw	P334500019	M8X15		1	
38	74183316	Button Head Screw	P334500020	M8X20		1	
39	74417263	Proximity Switch Box	6810500 B			1	
40	79565423	Hex Soc Cap Screw	P330230004	M8X15		4	
41	74305505	Socket Set Screw	P330550027	M6X12(Flat-end)		1	
42	74563687	Ball Plunger	P338182010	BP-6-H	JEC	1	
43	74569041	Plug For Piping	P580208041	P10810	GOSHO Works	1	
44	74569040	Saddle For Conduct	P381017110	PZ0108(D6.2)	DAIWA DENGYO	1	
45	74563689	Saddle For Conduct	P381017105	PZ0106(D6.2)	DAIWA DENGYO	2	
46	79573416	Hex Soc Cap Screw	P330210003	M5X10		3	
47	79573416	Hex Soc Cap Screw	P330210003	M5X10		1	
48	79567114	Spring Washer	P336050004	5		1	
49	74569990	Cable S-15 (1)	6812992			1	List Only
50	74417265	Shim (C)	6828591			2	List Only
51	74417266	Shim (T)	6828592			2	List Only

From Serial No.36102001 and after

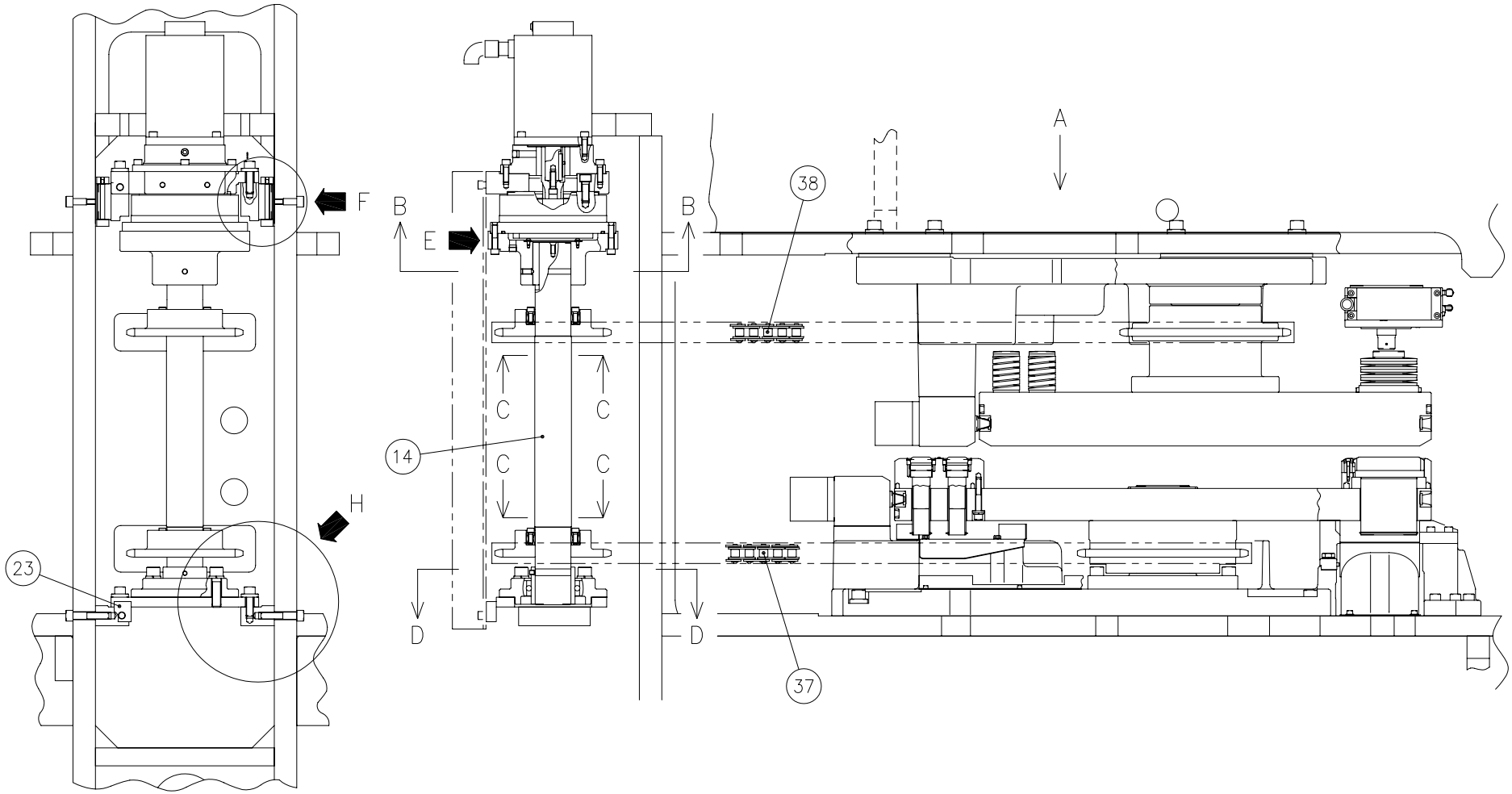

6879645
(6875320A)

From Serial No.36102001 and after

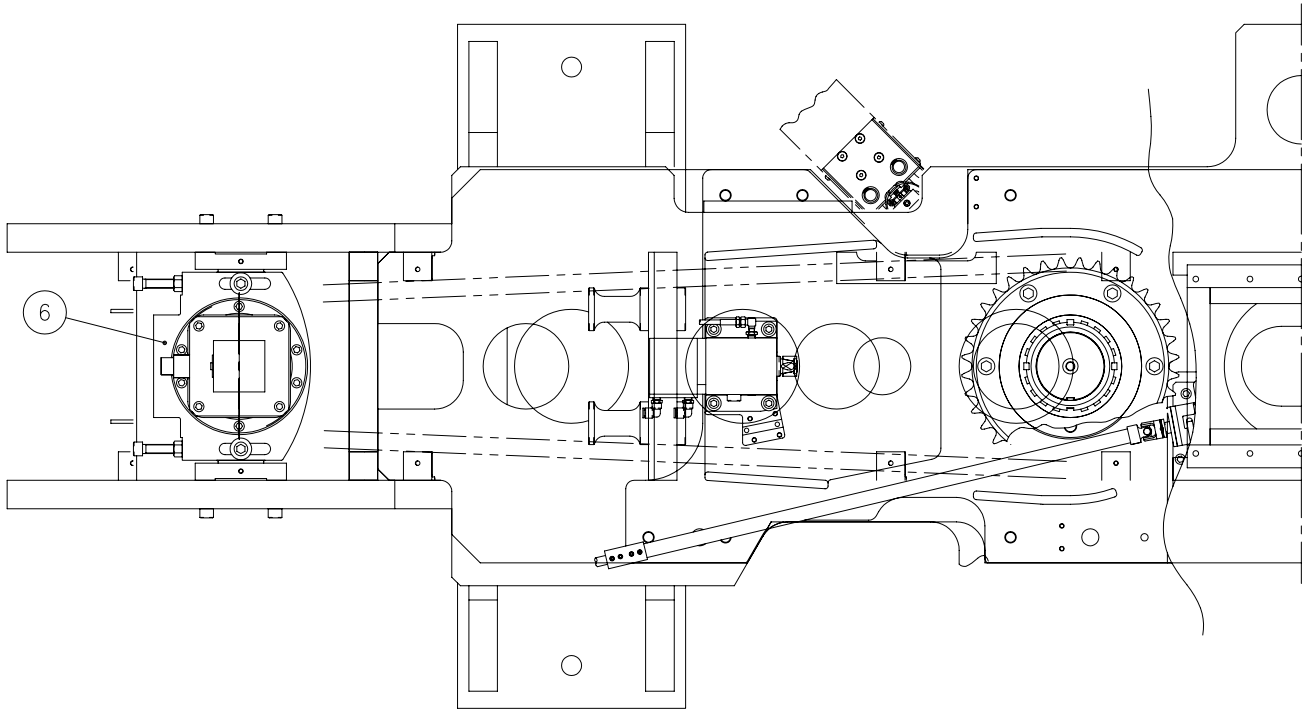

VIEW A

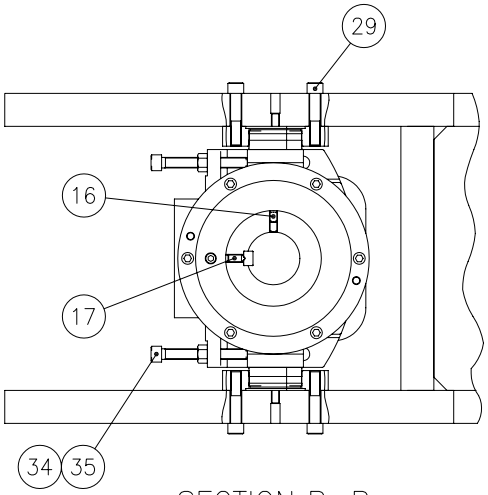

SECTION B–B

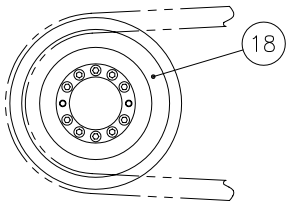

SECTION C–C

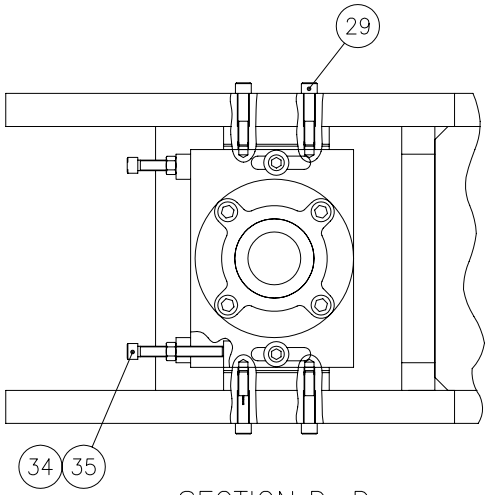

SECTION D–D

6879645
(6875320A)

From Serial No.36102001 and after

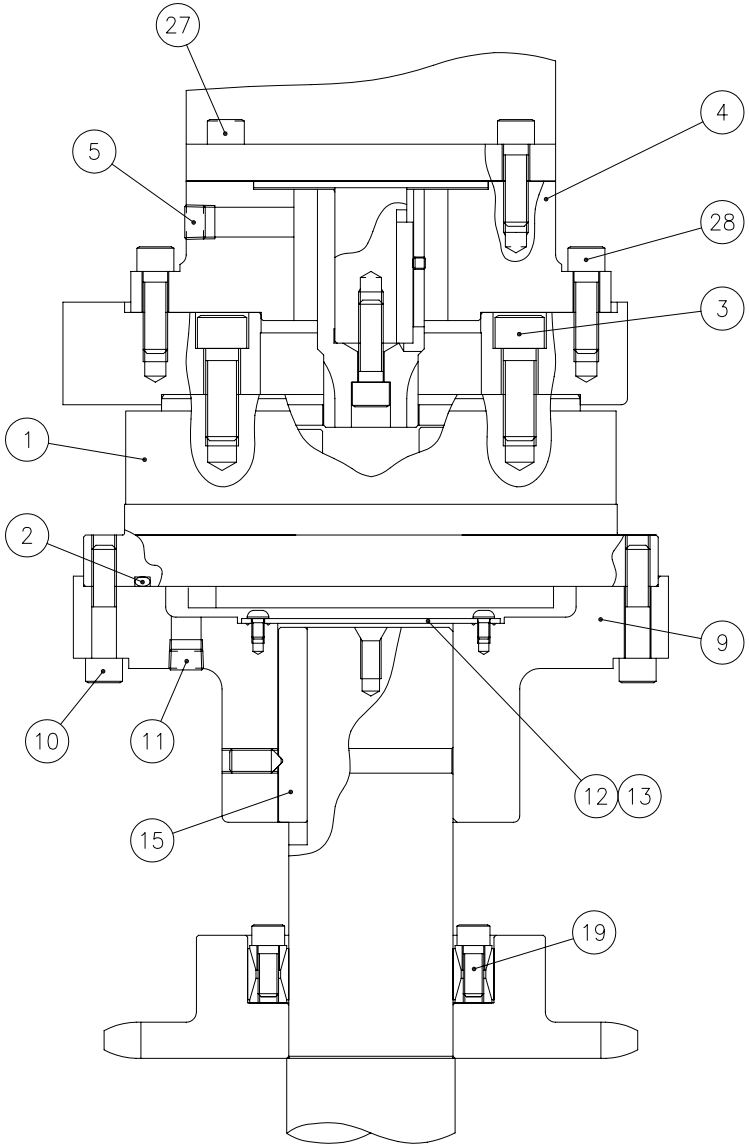

DETAIL E

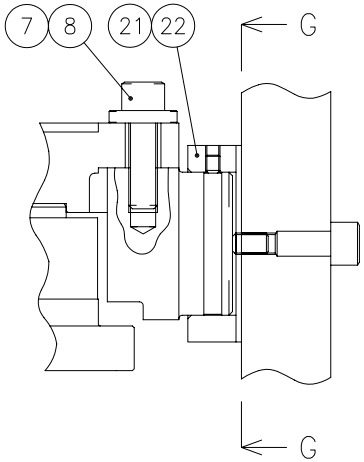

DETAIL F

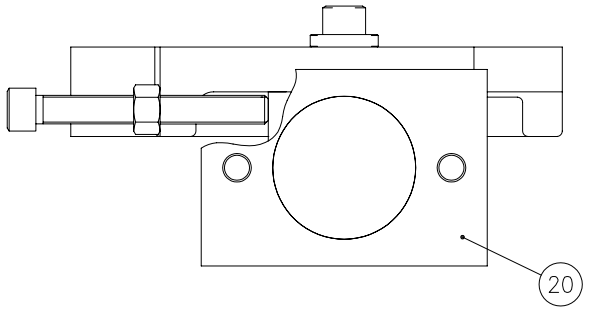

SECTION G–G

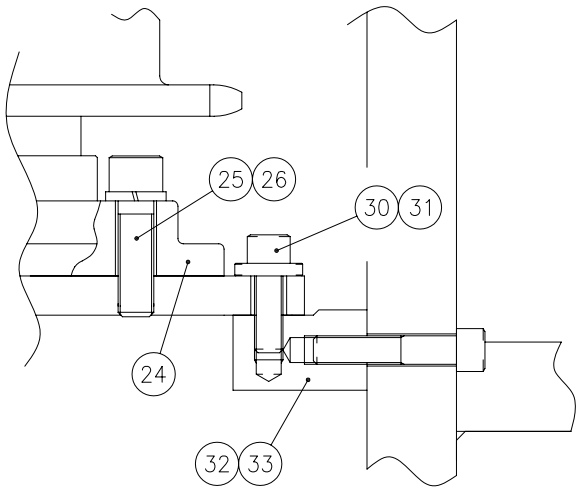

DETAIL H

6879645
(6875320A)

Unit No. 14

T-Axis

From Serial No.36102001 and after

Index	Code	Parts Name	Drawing No.	Type	Maker	Q'ty	Note
1	74569677	Transmission	7830618 A	RV-160E-61	TEIJIN SEIKI	1	
2	74571248	O Ring	P590012038	1A-G220	NOK	1	
3	79316138	Hex Soc Cap Screw	P330260033	M16X45		6	
4	74569678	Motor Base	6812577			1	
5	74389714	Silencer	P557033007	PSA103	TAIYO LTD.	1	
6	74569679	Base Plate	6812575			1	
7	74377038	Hex Soc Cap Screw	P330260035	M16X55		2	
8	74302325	Quenching Washer (M16)	0811632 A			2	
9	74569680	Driving Flange	6812562 B			1	
10	74304914	Hex Soc Cap Screw	P330250010	M12X55		6	
11	74722925	Plug For Piping	P580208003	GM-3/8	GOSHO Works	1	
12	74563001	Seal Plate	6593833 A			1	
13	36379029	Button Head Screw	P334500013	M6X10		6	
14	74418364	Driving Shaft	6875325 A			1	
15	74417286	Parallel Key	6812563 A			1	
16	71510168	Socket Set Screw	P330550059	M12X15(Flat-end)		2	
17	74569683	Socket Set Screw	P330580046	M12X25(Cone-end)		1	
18	74569684	Driving Sprocket	6812567			2	
19	74562452	Shaft Clamp Element	P432304034	PL080X120	TSUBAKIMOTO CHAIN	2	

From Serial No.36102001 and after

Index	Code	Parts Name	Drawing No.	Type	Maker	Q'ty	Note
20	74569685	Guide Pin	6810628			2	
21	74569686	Bracket (A)	6810626			2	
22	36618052	Socket Set Screw	P330550037	M8X10(Flat-end)		2	
23	74417289	Tension Plate	6871170			1	
24	74569687	Bearing Unit	7830619	UCFC216/LP03Q1	NTN	1	
25	71357839	Hex Soc Cap Screw	P330270009	M20X70		4	
26	86611624	Spring Washer	P336050012	20		4	
27	86213032	Hex Soc Cap Screw	P330250007	M12X40		4	
28	86213032	Hex Soc Cap Screw	P330250007	M12X40		6	
29	36367712	Hex Soc Cap Screw	P330260040	M16X80		4	
30	86630856	Hex Soc Cap Screw	P330260034	M16X50		2	
31	74302325	Quenching Washer (M16)	0811632 A			2	
32	74418365	Bracket (B)	6875322			2	
33	36367712	Hex Soc Cap Screw	P330260040	M16X80		4	
34	74387118	Hex Soc Cap Screw	P330260070	M16X130(All-thread)		4	
35	31183536	Nut	P332000009	M16		4	
36		Grease	P238048010	RE(1kg)	Nabtesco	1	List Only
37	74578808	Chain	P410502031	RS100-116L	TSUBAKIMOTO CHAIN	1	
38	74578809	Chain	P410502030	RS100-122L	TSUBAKIMOTO CHAIN	1	

From Serial No.36102001 and after

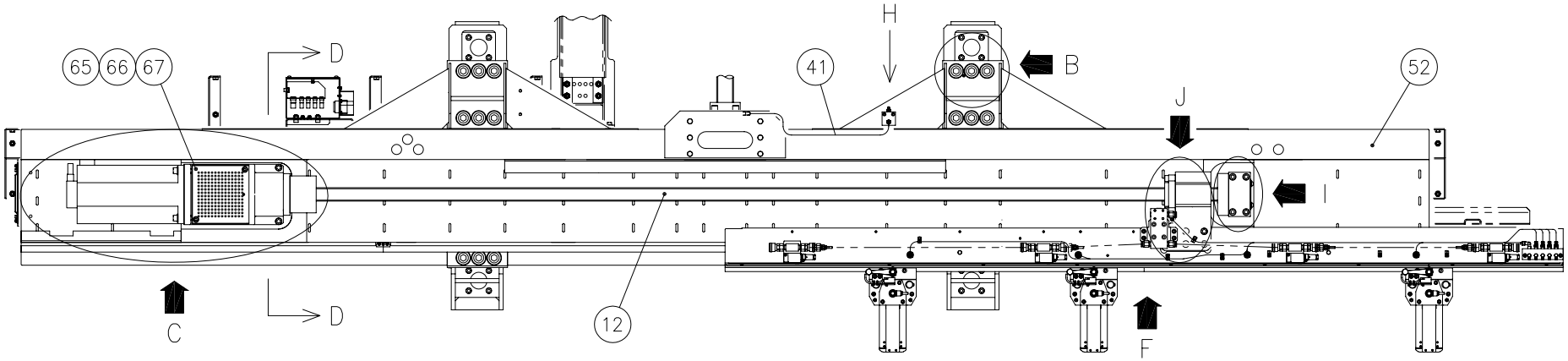

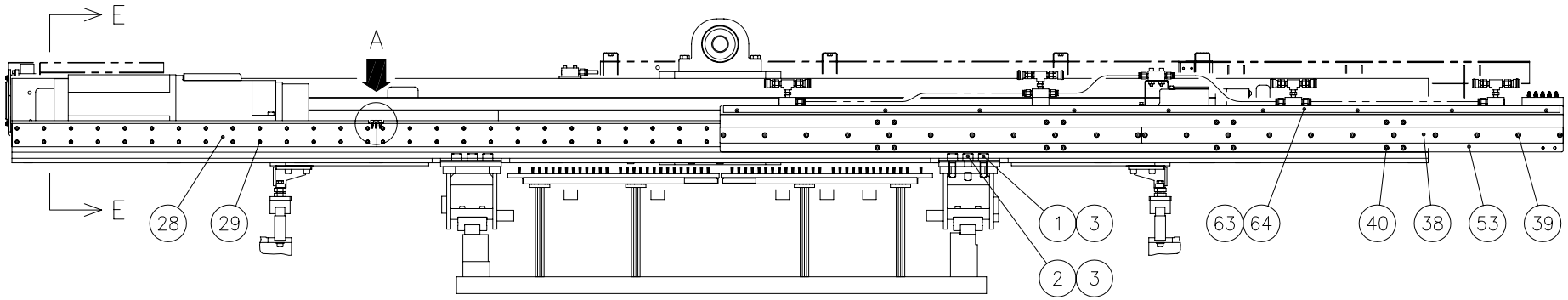

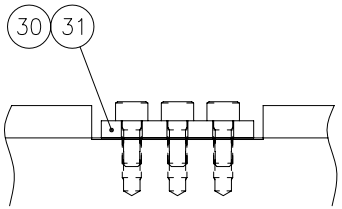

DETAIL A

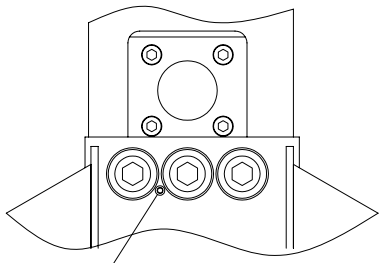

DETAIL B

6874300C

From Serial No.36102001 and after

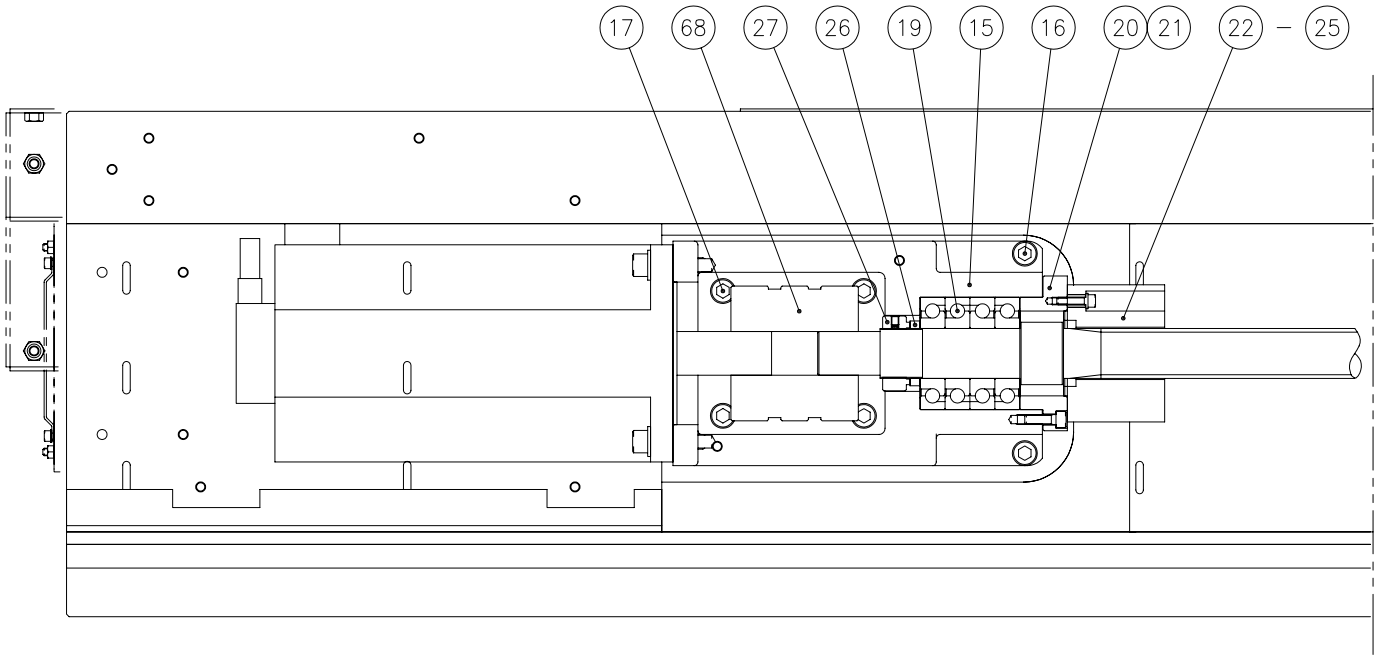

DETAIL C

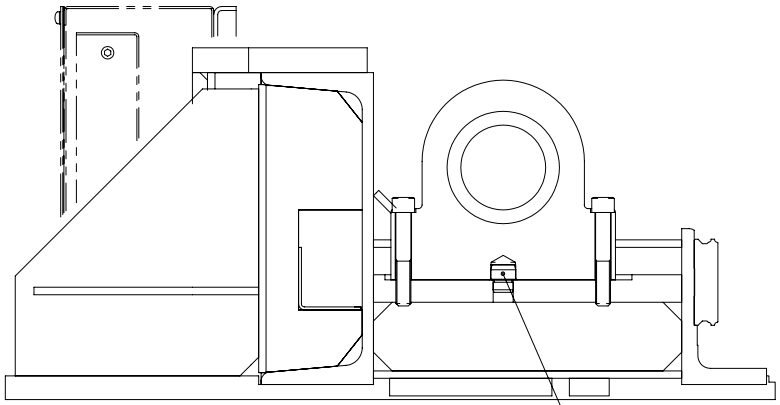

SECTION D–D

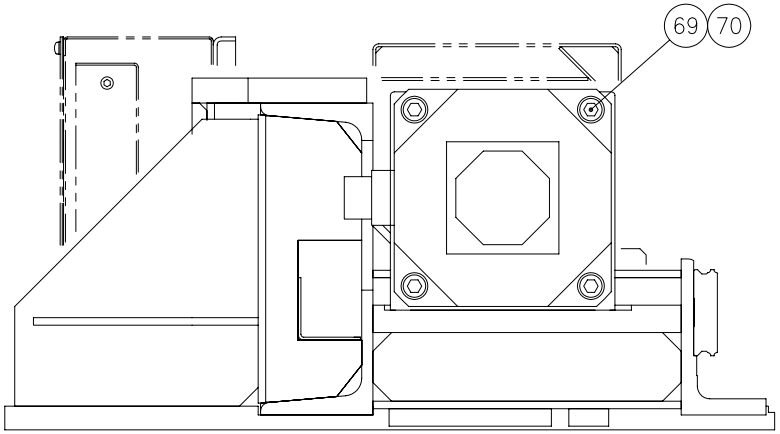

SECTION E–E

6874300C

From Serial No.36102001 and after

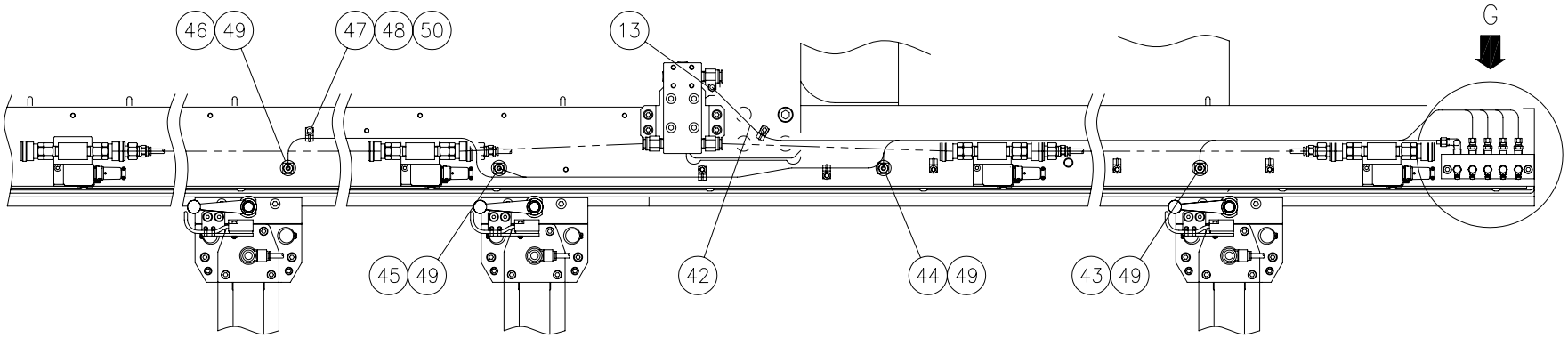

DETAIL F

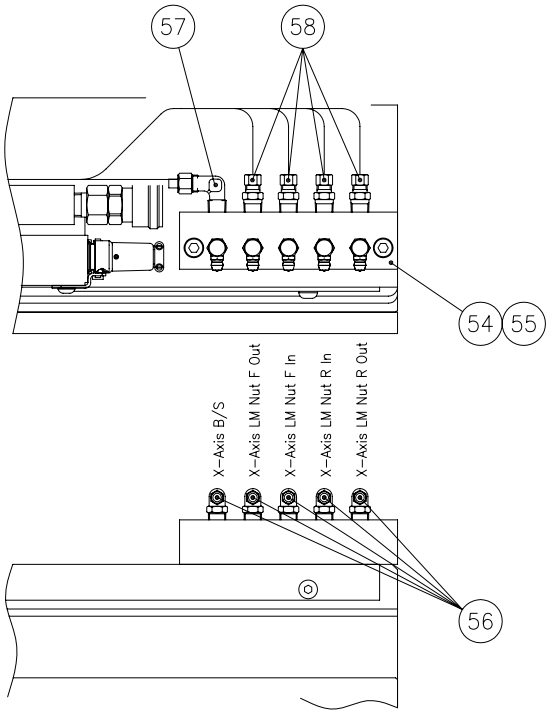

DETAIL G

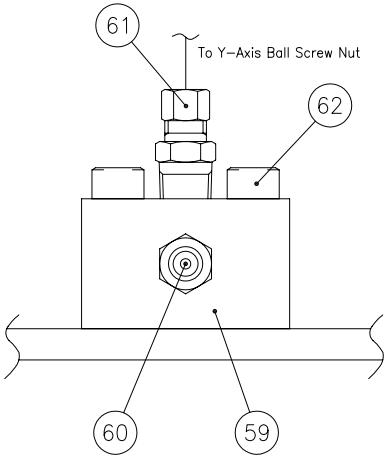

VIEW H

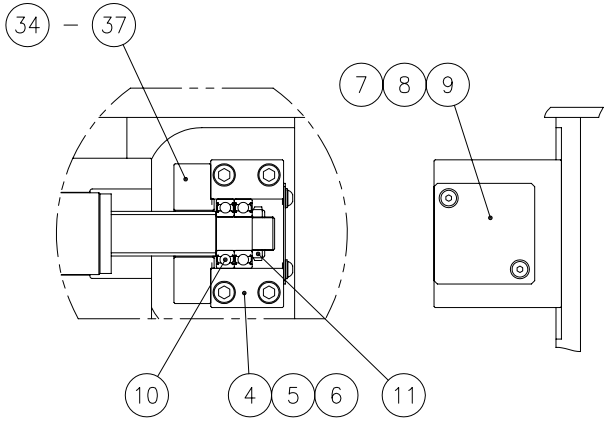

DETAIL I

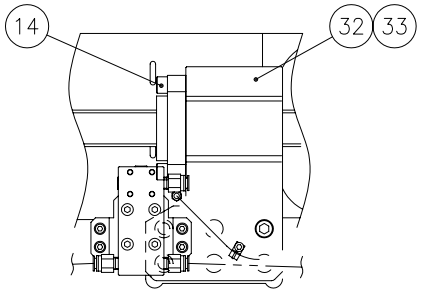

DETAIL J

6874300C

Unit No. 15
Slide(1)

From Serial No.36102001 and after

Index	Code	Parts Name	Drawing No.	Type	Maker	Q'ty	Note
1	71462102	Hex Soc Cap Screw	P330270006	M20X55		17	
2	74569699	Reamer Bolt	6812631			1	
3	74415423	Washer (M20)	6826247			18	
4	74419095	Bearing Housing (X)	6874306 A			1	
5	74388280	Shim	6597110			1	
6	10000830	Hex Soc Cap Screw	P330250015	M12X80		4	
7	74417309	Bearing Cover	6874308			1	
8	10569021	Button Head Screw	P334500019	M8X15		2	
9	79567109	Washer	P336000006	8(Regular Round)		2	
10	74417310	Complex Bearing	7830982	6206DDUC3**DBCP6P5** AS2S	NSK	1	
11	74703755	Lock Nut	P406168011	FU06SC	FUJI SEIMITSU	1	
12	74417311	X-axis Ball Screw	7830979	BLK4050S-3.6G0+3057LC3	THK	1	
13	74722933	Bite Type Pipe Fitting	P585536006	ML-2061	AOI	1	
14	86213032	Hex Soc Cap Screw	P330250007	M12X40		4	
15	74419096	Motor Bracket	6874301 A			1	
16	10558427	Hex Soc Cap Screw	P330250014	M12X75		2	
17	86213032	Hex Soc Cap Screw	P330250007	M12X40		4	
18	74389149	Locating Pin	6598911			1	
19	74417313	Complex Bearing	7830981	40TAC90BDDGSUC10PN7B WPHL	NSK	4	

Index	Code	Parts Name	Drawing No.	Type	Maker	Q'ty	Note
20	74417314	X-axis Bearing Retainer	6874302			1	
21	79566121	Hex Soc Cap Screw	P330230007	M8X25		6	
22	74417315	Damper (Drive)	6874304 B			1	
23	79565422	Hex Soc Cap Screw	P330220011	M6X25		4	
24	79565419	Washer	P336000005	6(Regular Round)		4	
25	74563122	Collar (L)	6598959			4	
26	74417316	Collar	6874303			1	
27	74388292	Lock Nut	P406163001	WBK40L-31	NSK	1	
28	74569709	X-axis LM Guide	7830612	SHW35CR4SSC1E-HT	THK	1	
29	79567722	Hex Soc Cap Screw	P330220009	M6X20		108	
30	74389161	Stopper Piece	6598919			2	
31	79567721	Hex Soc Cap Screw	P330210004	M5X12		6	
32	74417317	X-axis Nut Bracket	6874309			1	
33	79316507	Hex Soc Cap Screw	P330250009	M12X50		6	
34	74417318	Damper (X)	6874307			1	
35	79564804	Hex Soc Cap Screw	P330230006	M8X20		4	
36	79567109	Washer	P336000006	8(Regular Round)		4	
37	74563121	Collar (S)	6598958			4	
38	74417319	Guide Plate (1250)	6874314			2	

From Serial No.36102001 and after

Index	Code	Parts Name	Drawing No.	Type	Maker	Q'ty	Note
39	79564804	Hex Soc Cap Screw	P330230006	M8X20		22	
40	79570112	Hex Soc Cap Screw	P330230045	M8X22		24	
41	71511239	Plastic Hose	P230223143	AS2170-06(White)-1.2M	JUNKOSHA	1	
42	71511239	Plastic Hose	P230223144	AS2170-06(White)-1.5M	JUNKOSHA	1	
43	71511239	Plastic Hose	P230223235	AS2170-06(White)-2.2M	JUNKOSHA	1	
44	71511239	Plastic Hose	P230223236	AS2170-06(White)-1.7M	JUNKOSHA	1	
45	71511239	Plastic Hose	P230223143	AS2170-06(White)-1.2M	JUNKOSHA	1	
46	71511239	Plastic Hose	P230223237	AS2170-06(White)-0.7M	JUNKOSHA	1	
47	74563689	Saddle For Conduct	P381017105	PZ0106(D6.2)	DAIWA DENGYO	4	
48	31183033	Hex Soc Cap Screw	P330220003	M6X10		4	
49	71366449	Bite Type Pipe Fitting	P585535004	PN-6X4-PT1/8-BS	JUNKOSHA	4	
50	36386498	Cable Band	P381058026	SKB-1M	KITAGAWA	10	
51	74389170	Taper Pin	P337010124	8X30(Inner Screw)		2	
52	74419238	Carriage Base Assy	6874311			1	
53	74419239	Carriage Assy	6874327 A			1	
54	74570270	Block (C/R)	6820597			1	
55	86213043	Hex Soc Cap Screw	P330220012	M6X30		2	
56	74524127	Grease Nipple	P560600007	C-PT1/8		5	
57	71366445	Bite Type Pipe Fitting	P585565001	PL-6X4-PT1/8-BS	JUNKOSHA	1	

From Serial No.36102001 and after

Index	Code	Parts Name	Drawing No.	Type	Maker	Q'ty	Note
58	71366449	Bite Type Pipe Fitting	P585535004	PN-6X4-PT1/8-BS	JUNKOSHA	4	
59	74417323	Block (C/B)	6874374	S40-25		1	
60	74304826	Grease Nipple	P560600004	A-PT1/8		1	
61	71366449	Bite Type Pipe Fitting	P585535004	PN-6X4-PT1/8-BS	JUNKOSHA	1	
62	86283301	Hex Soc Cap Screw	P330220013	M6X35		2	
63	74389167	Scale 2500 (mm)	6597116			1	mm
63	74389166	Scale 2500 (Inch)	6597128 A			1	inch
64	36379029	Button Head Screw	P334500013	M6X10		9	
65	74417324	Motor Cover	6874305			1	
66	79565423	Hex Soc Cap Screw	P330230004	M8X15		2	
67	79567109	Washer	P336000006	8(Regular Round)		2	
68	74415044	Coupling	7830758 A	SFC-100DA-T009	Miki Pulley	1	
69	36110743	Hex Soc Cap Screw	P330250006	M12X35		4	
70	86613931	Washer	P336000008	12(Regular Round)		4	
71	36501002	Hex Soc Cap Screw	P330210002	M5X8		1	List Only
72	74419102	Rubber Bushing	6878638			4	List Only

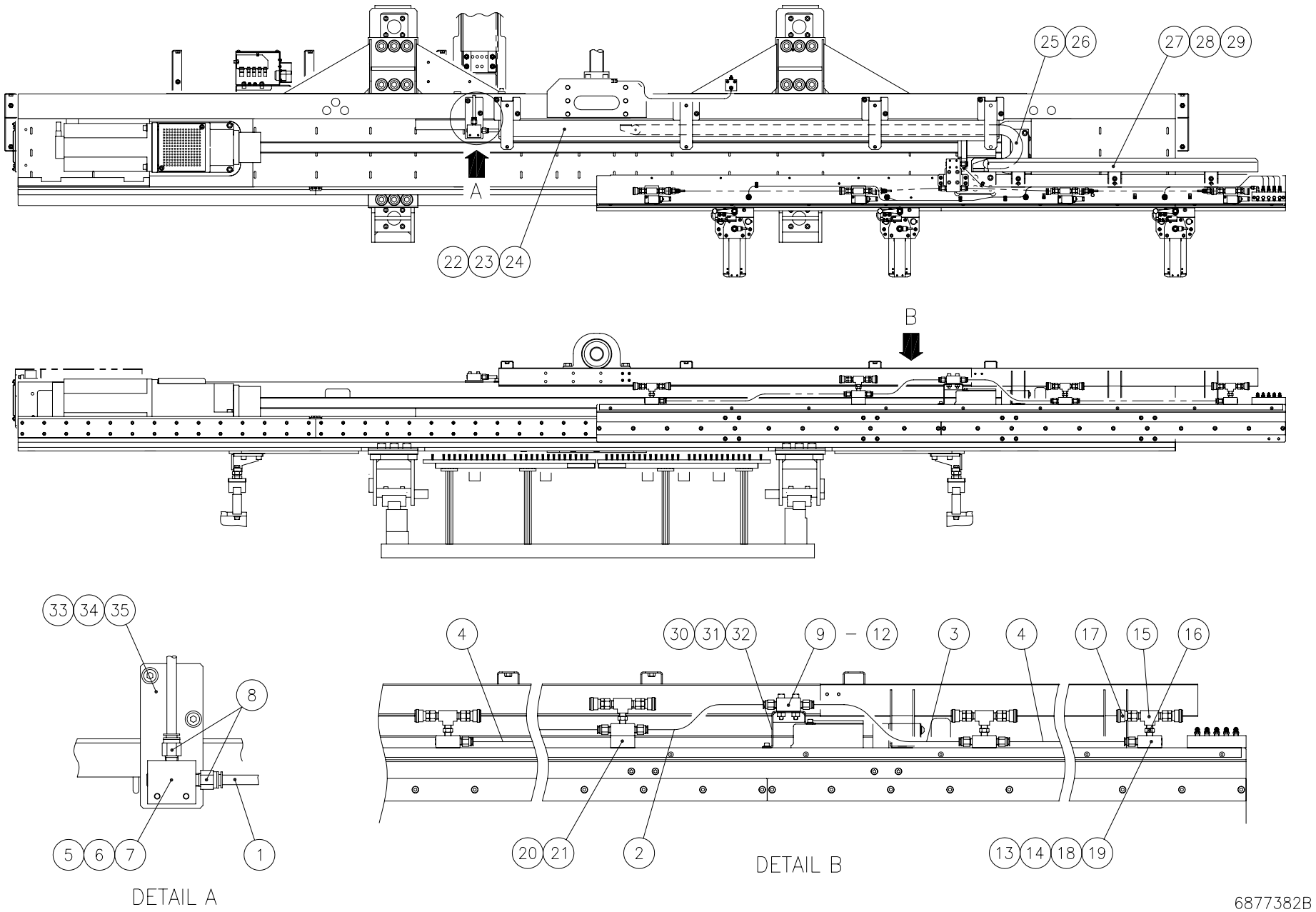
25
26
27
28
29
A
22
23
24
B
33
34
35
8
5
6
7
1
DETAIL A
4
30
31
32
9
12
3
4
17
15
16
20
21
2
DETAIL B
13
14
18
19
6877382B

Unit No. 16
Slide(2)

From Serial No.36102001 and after

Index	Code	Parts Name	Drawing No.	Type	Maker	Q'ty	Note
1	71371423	Plastic Hose	P230242094	N2-4-10X8(Black)-4M	NITTA MOORE	1	
2	71371423	Plastic Hose	P230242089	N2-4-10X8(Black)-0.5M	NITTA MOORE	1	
3	71371423	Plastic Hose	P230242089	N2-4-10X8(Black)-0.5M	NITTA MOORE	1	
4	71371423	Plastic Hose	P230242144	N2-4-10X8(Black)-0.8M	NITTA MOORE	2	
5	74561698	Piping Block (A)	6597197 A			1	
6	86283301	Hex Soc Cap Screw	P330220013	M6X35		2	
7	36327821	Plug For Piping	P580208002	GM-1/4	GOSHO Works	1	
8	74722943	Instant Fitting	P586534007	EC10-PT1/4	NITTA MOORE	2	
9	74388410	Piping Block (B)	6597198			1	
10	36367625	Hex Soc Cap Screw	P330230010	M8X40		4	
11	36327821	Plug For Piping	P580208002	GM-1/4	GOSHO Works	2	
12	74722943	Instant Fitting	P586534007	EC10-PT1/4	NITTA MOORE	3	
13	74417230	Piping Block (C)	6874379			4	
14	79568702	Hex Soc Cap Screw	P330230008	M8X30		6	
15	74722912	Tee	P580100002	1/4		4	
16	10385517	Nipple	P580023002	NA-1/4	BAN SS	4	
17	74309933	Coupler	7832018	20SM(with Stopper)	NITTO KOHKI	8	
18	74722943	Instant Fitting	P586534007	EC10-PT1/4	NITTA MOORE	6	
19	36327821	Plug For Piping	P580208002	GM-1/4	GOSHO Works	2	

Index	Code	Parts Name	Drawing No.	Type	Maker	Q'ty	Note
20	74416428	Spacer	6829066	FB25X16-50		1	
21	36325730	Hex Soc Cap Screw	P330230013	M8X55		2	
22	74419103	Fixed Hose Guide	6874332 A			1	
23	79565423	Hex Soc Cap Screw	P330230004	M8X15		8	
24	79567109	Washer	P336000006	8(Regular Round)		8	
25	74417229	Cable Guard	7830977	250.03.055-34-2000.12	IGUS Japan	1	
26	36379029	Button Head Screw	P334500013	M6X10		8	
27	74417325	Movable Hose Guide	6874333 A			1	
28	79564804	Hex Soc Cap Screw	P330230006	M8X20		6	
29	79567109	Washer	P336000006	8(Regular Round)		6	
30	74415526	Connector Bracket	6826385			1	
31	31183033	Hex Soc Cap Screw	P330220003	M6X10		4	
32	79565419	Washer	P336000005	6(Regular Round)		4	
33	74417326	Manifold Bracket	6874334			1	
34	79564804	Hex Soc Cap Screw	P330230006	M8X20		2	
35	79567109	Washer	P336000006	8(Regular Round)		2	

From Serial No.36102001 and after

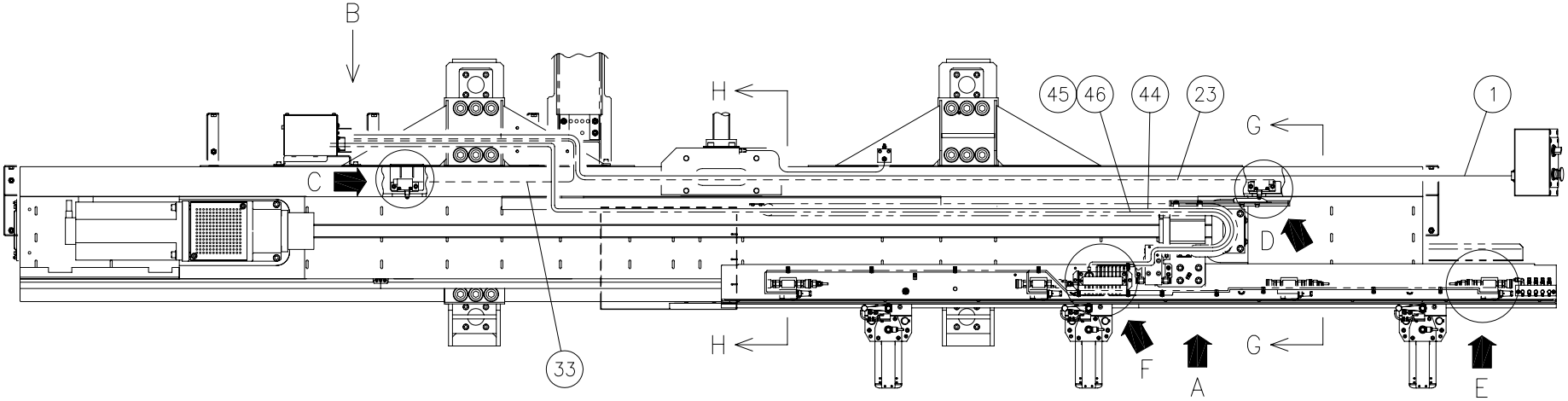

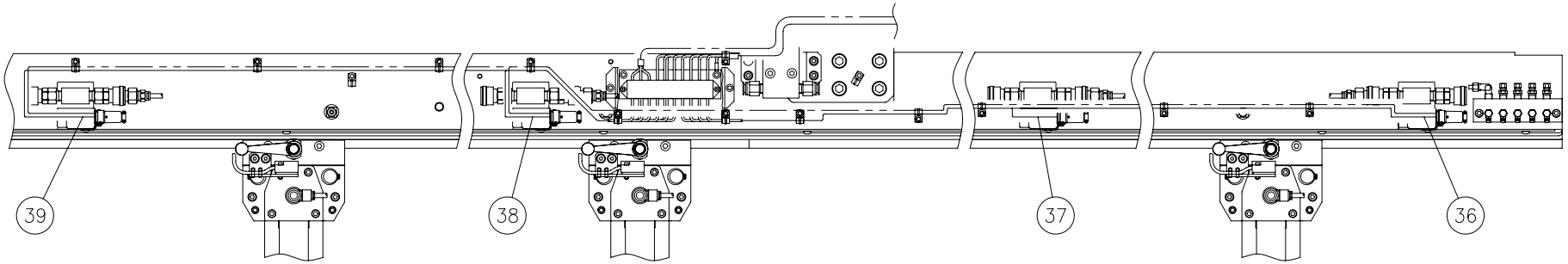

DETAIL A

6874350#1C
6874350#2C

From Serial No.36102001 and after

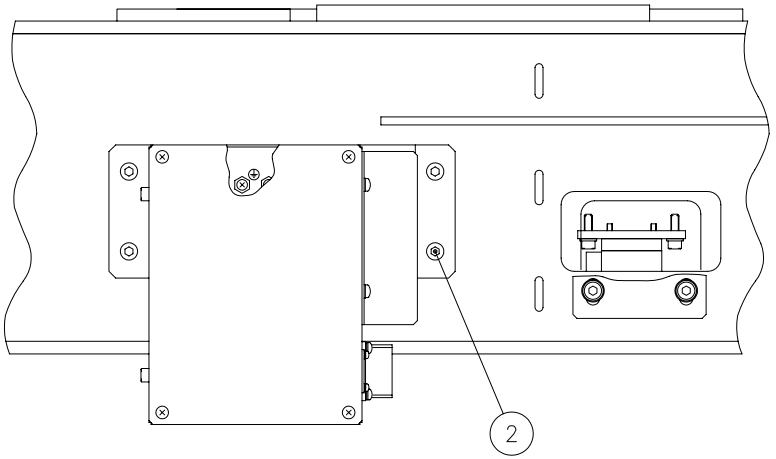

VIEW B

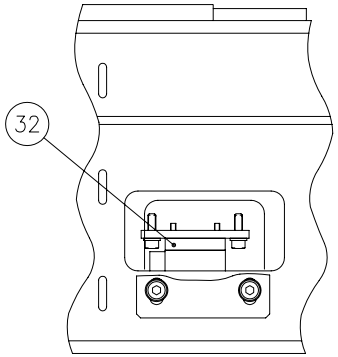

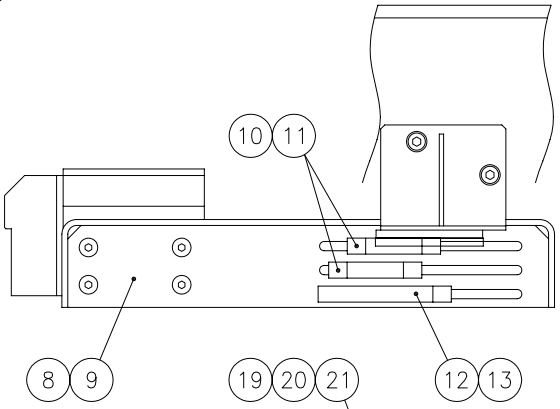

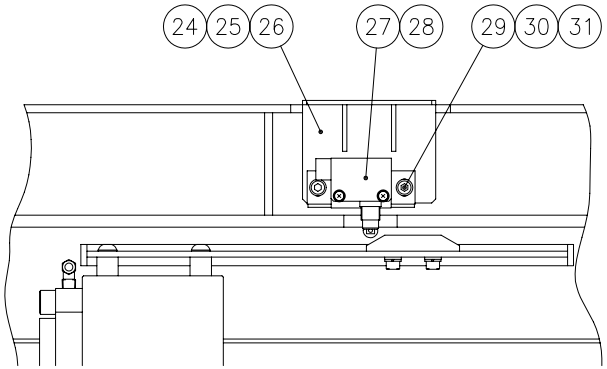

DETAIL C

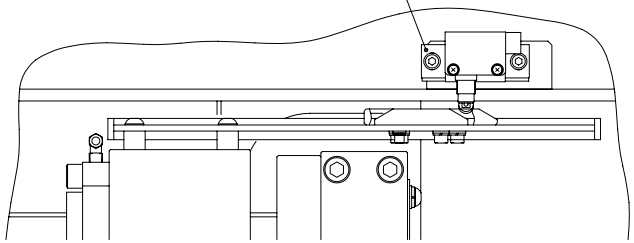

DETAIL D

6874350#1C
6874350#2C

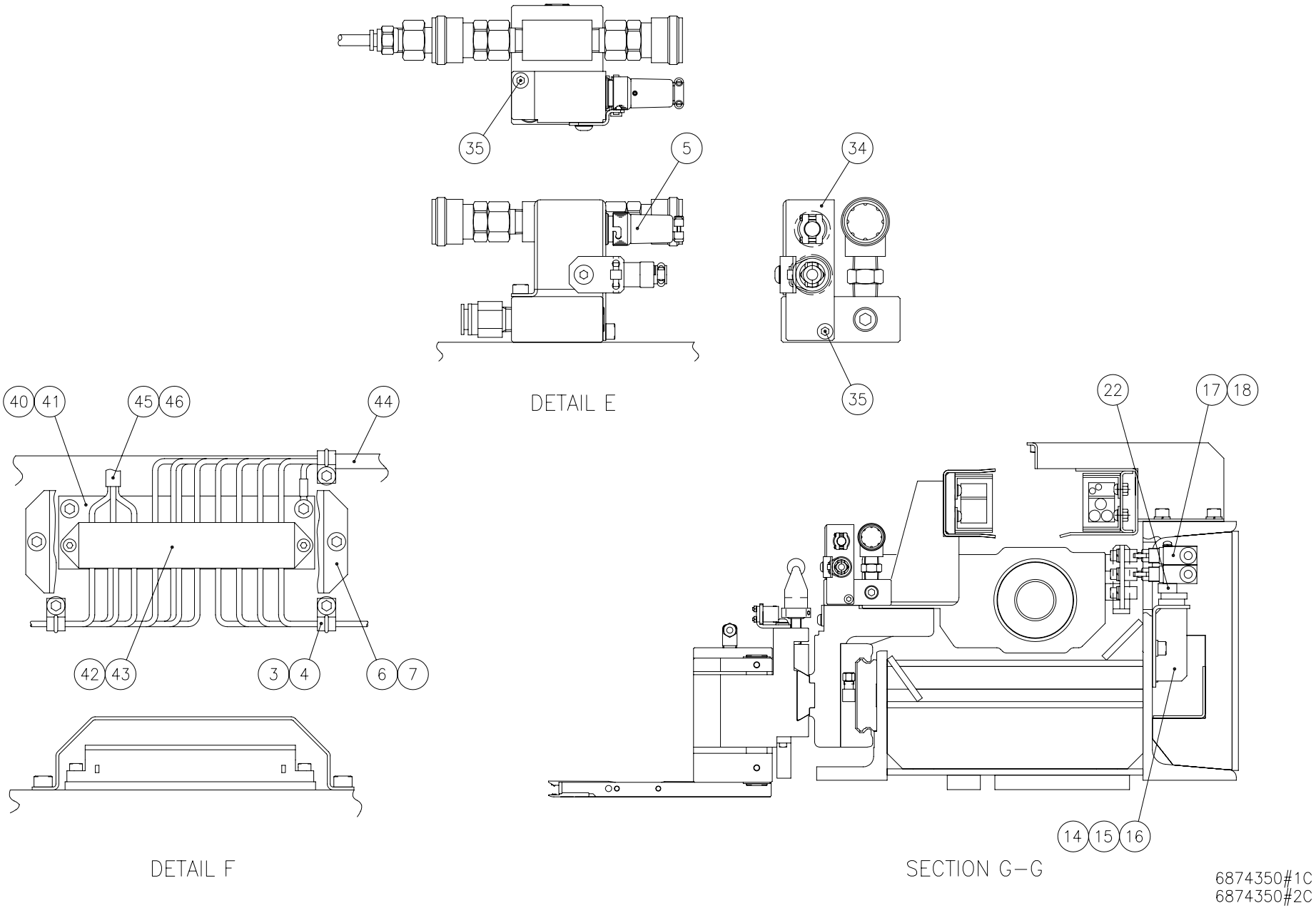
35
5
34
35
DETAIL E
40
41
45
46
44
42
43
3
4
6
7
DETAIL F
22
17
18
14
15
16
SECTION G–G
6874350#1C
6874350#2C

From Serial No.36102001 and after

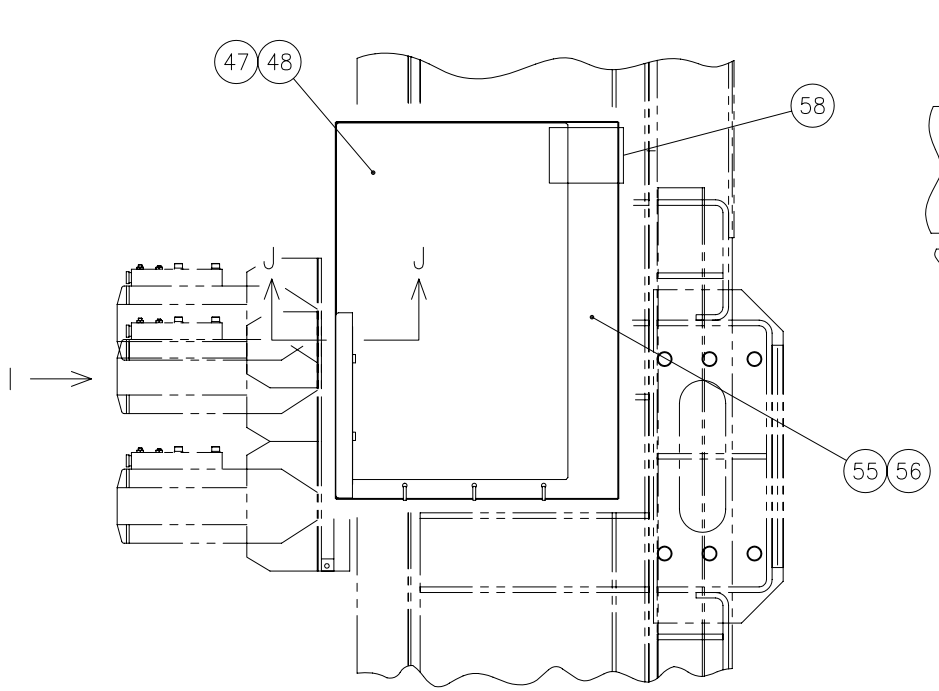

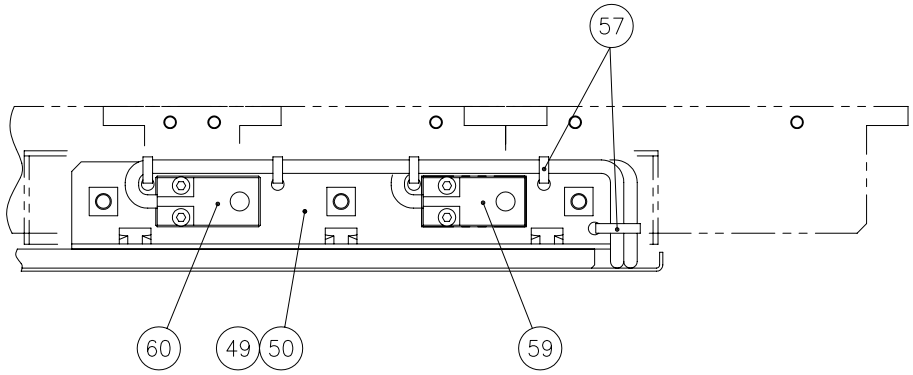

VIEW I

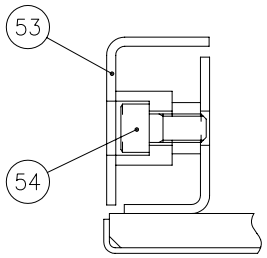

SECTION J–J

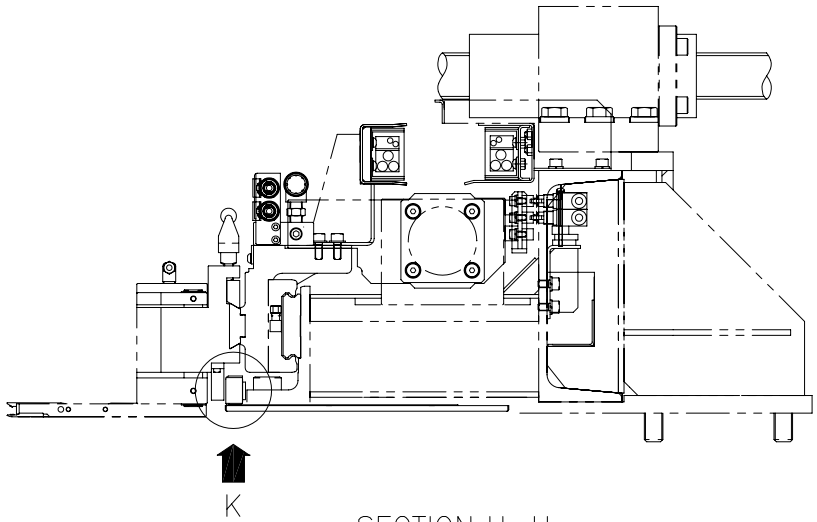

SECTION H–H

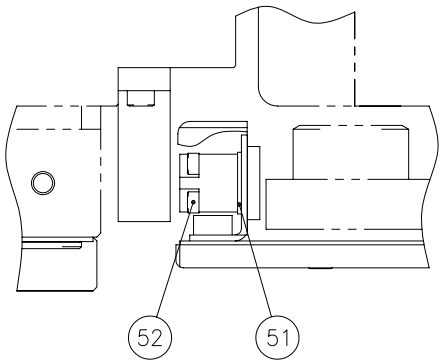

DETAIL K

6874350#1C
6874350#2C

Unit No. 17
Slide(3)

From Serial No.36102001 and after

Index	Code	Parts Name	Drawing No.	Type	Maker	Q'ty	Note
1	74415575	Cable X-4	6827583			1	
2	79565423	Hex Soc Cap Screw	P330230004	M8X15		4	
3	74722817	Saddle For Conduct	P381017069	PZ0112(D6.2)	DAIWA DENGYO	19	
4	31183033	Hex Soc Cap Screw	P330220003	M6X10		19	
5	74417327	Jumper Connector	6871656			2	
6	74415631	Terminal Block Cover	6870446			1	
7	31183033	Hex Soc Cap Screw	P330220003	M6X10		2	
8	74417328	Dog Bracket (X)	6874354			1	
9	74565073	Button Head Screw	P334500063	M8X35		4	
10	74306902	Dog (OT)	0818707 A			2	
11	74388246	Hex Soc Cap Screw	P330498012	GT-LA-M6X12	GOSHO Works	4	
12	74306908	Dog (B)	0808516 A			1	
13	74388246	Hex Soc Cap Screw	P330498012	GT-LA-M6X12	GOSHO Works	2	
14	74417329	LS Bracket (+X)	6874353 A			1	
15	79565423	Hex Soc Cap Screw	P330230004	M8X15		2	
16	79567109	Washer	P336000006	8(Regular Round)		2	
17	74723031	Limit Switch	P828013004	SL1-A	YAMATAKE	2	
18	74415627	Pan Head Screw with Washer	P334200125	M4X60(Chromate P-4)		2	
19	74389260	LS Plate	6598953			1	

From Serial No.36102001 and after

Index	Code	Parts Name	Drawing No.	Type	Maker	Q'ty	Note
20	79567722	Hex Soc Cap Screw	P330220009	M6X20		2	
21	79565419	Washer	P336000005	6(Regular Round)		2	
22	74417332	LS Spacer	6871530			1	
23	74415574	Cable X-2	6827582			1	
24	74419104	LS Bracket (-X)	6873323 A			1	
25	79565423	Hex Soc Cap Screw	P330230004	M8X15		2	
26	79567109	Washer	P336000006	8(Regular Round)		2	
27	74723031	Limit Switch	P828013004	SL1-A	YAMATAKE	1	
28	74417331	Pan Head Screw with Washer	P334200121	M4X40(Chromate P-4)		2	
29	74389260	LS Plate	6598953			1	
30	79567722	Hex Soc Cap Screw	P330220009	M6X20		2	
31	79565419	Washer	P336000005	6(Regular Round)		2	
32	74417332	LS Spacer	6871530			1	
33	74417333	Cable X-1	6873332			1	
34	74417334	Connector Bracket (EM)	6874329			4	
35	79573416	Hex Soc Cap Screw	P330210003	M5X10		8	
36	74417335	Cable X-14 (1)	6871652			1	
37	74417336	Cable X-14 (2)	6871653			1	
38	74417337	Cable X-14 (3)	6871654			1	

From Serial No.36102001 and after

Index	Code	Parts Name	Drawing No.	Type	Maker	Q'ty	Note
39	74417338	Cable X-14 (4)	6871655			1	
40	74415630	Bracket	6827535			1	
41	79564305	Hex Soc Cap Screw	P330220006	M6X15		2	
42	74386224	Rectangle Connector	P862138055	KS10KRG/D10	WEIDMULLER	1	
43	79574601	Hex Soc Cap Screw	P330200015	M4X10		2	
44	74415968	Cable X-14	6828896			1	
45	74417339	Cable X-9	6877909			1	
46	71364794	Plastic Hose	P230252043	N2-4-12X9(Black)-1.85M	NITTA MOORE	1	
47	74417340	Detecting Plate Bracket	6877901			1	
48	74300624	Button Head Screw	P334500015	M6X15		6	
49	74417341	Sensor Bracket	6877898			1	
50	36379029	Button Head Screw	P334500013	M6X10		3	
51	74417342	Insulating Plate	6877900			2	
52	79316101	Hex Soc Cap Screw	P330200006	M3X15		4	
53	74417343	Sensor Bracket Cover	6877899			1	
54	79573416	Hex Soc Cap Screw	P330210003	M5X10		3	
55	74417344	Cable Cover	6877902			1	
56	74388461	Button Head Screw	P334500036	M4X5		9	
57	36386498	Cable Band	P381058026	SKB-1M	KITAGAWA	8	

Unit No. 17

Slide(3)

From Serial No.36102001 and after

Index	Code	Parts Name	Drawing No.	Type	Maker	Q'ty	Note
58	74415636	Sponge Rubber	6827507			1	
59	74419240	Cable X-5	6877907 B			1	
60	74419241	Cable X-7	6877908 B			1	

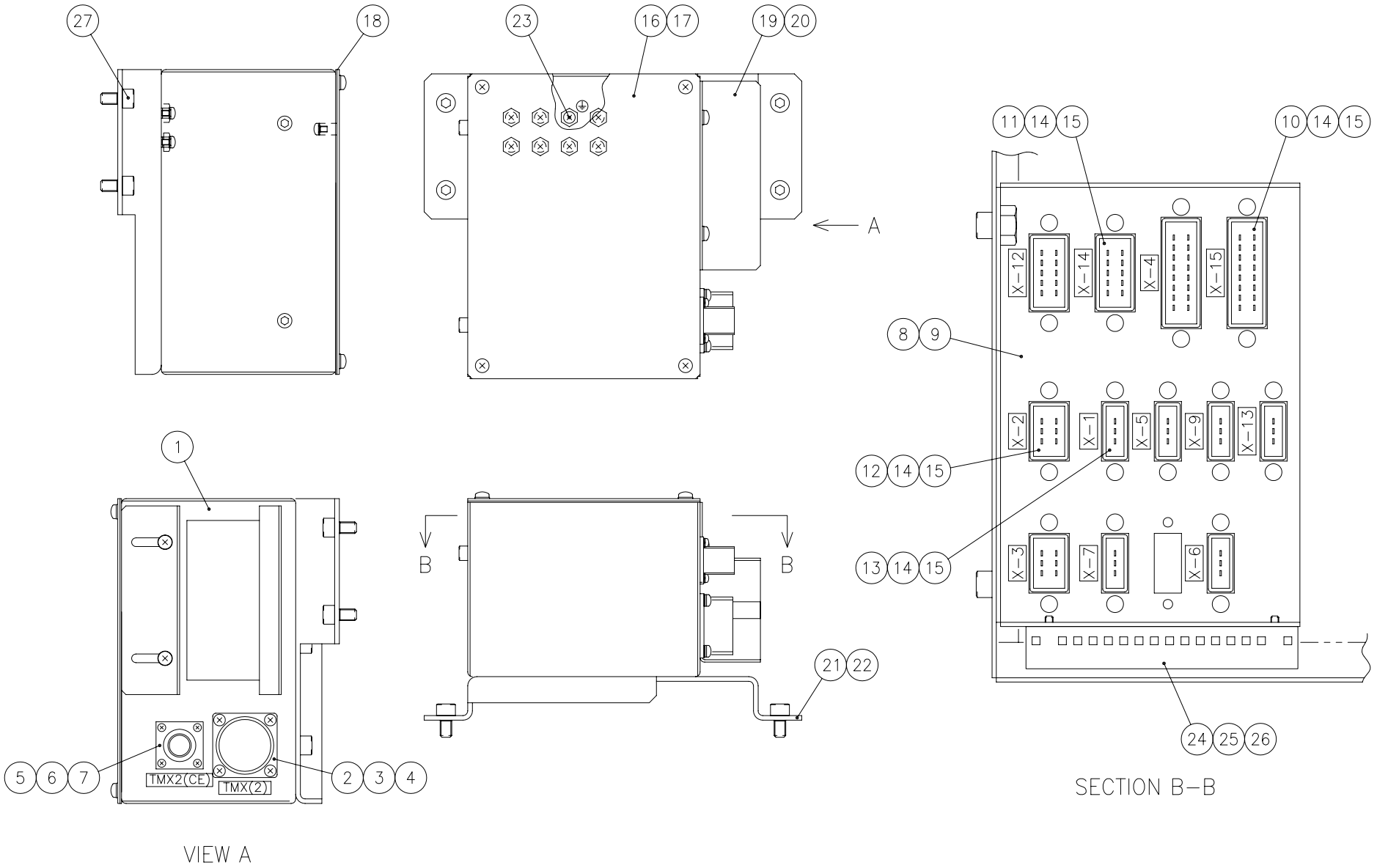
27
18
23
16
17
19
20
A
11
14
15
10
14
15
X-12
X-14
X-4
X-15
8
9
X-2
X-1
X-5
X-9
X-13
12
14
15
13
14
15
X-3
X-7
X-6
1
B
B
21
22
24
25
26
5
6
7
TMX2(CE)
TMX(2)
2
3
4
VIEW A
SECTION B-B
6878166

From Serial No.36102001 and after

Index	Code	Parts Name	Drawing No.	Type	Maker	Q'ty	Note
1	74415617	X Relay Box Cover (CE)	6820276 A			1	
2	74570029	Metallic Connector	P860003048	JL05-2A24-52APC-F0	JAE	1	52P
3	74386731	Accessory For Connector	P862188037	ST-JL05-20P-C1-100	JAE	52	
4	74570030	Pan Head Screw with Washer	P334200115	M4X10(Chromate P-4)		4	
5	74388447	Plastic R Connector	P862032007	206705-1	AMP	1	9P
6	74379484	Plug Type Terminal	P862142002	66099-2	AMP	9	
7	74569454	Pan Head Screw with Washer	P334200145	M3X8(Chromate P-4)		4	
8	74575284	Housing Plate (X)	6827521			1	
9	31183033	Hex Soc Cap Screw	P330220003	M6X10		2	
10	74386500	Rectangle Connector	P862042071	178803-7	AMP	2	16P
11	74387014	Rectangle Connector	P862042069	178803-5	AMP	2	10P
12	74386501	Rectangle Connector	P862042068	178803-3	AMP	2	6P
13	74386502	Rectangle Connector	P862042073	1-178802-3	AMP	6	3P
14	74386503	Plug Type Terminal	P862142036	175289-5	AMP	65	
15	74386505	Accessory For Connector	P862182002	900128-2	AMP	24	
16	74570032	Relay Box Cover (CE)	6820277			1	
17	74570033	Pan Head Screw with Washer	P334200134	M5X10(Chromate P-4)		4	
18	74570034	Packing (CE)	6820263			1	
19	74570035	Cable Clamp (CE)	6820278			1	

From Serial No.36102001 and after

Index	Code	Parts Name	Drawing No.	Type	Maker	Q'ty	Note
20	74570033	Pan Head Screw with Washer	P334200134	M5X10(Chromate P-4)		2	
21	74570041	Base (2)	6813003			1	
22	79565423	Hex Soc Cap Screw	P330230004	M8X15		4	
23	74569811	Pan Head Screw with Washer	P334200113	M4X6(Chromate P-4)		9	
24	74569809	Block Terminal	P864008047	MK4/16KRG	WEIDMULLER	1	
25	74386496	Plug Type Terminal	P862148024	H0.75/15	WEIDMULLER	21	
26	79316101	Hex Soc Cap Screw	P330200006	M3X15		2	
27	79565423	Hex Soc Cap Screw	P330230004	M8X15		4	

From Serial No.36102001 and after

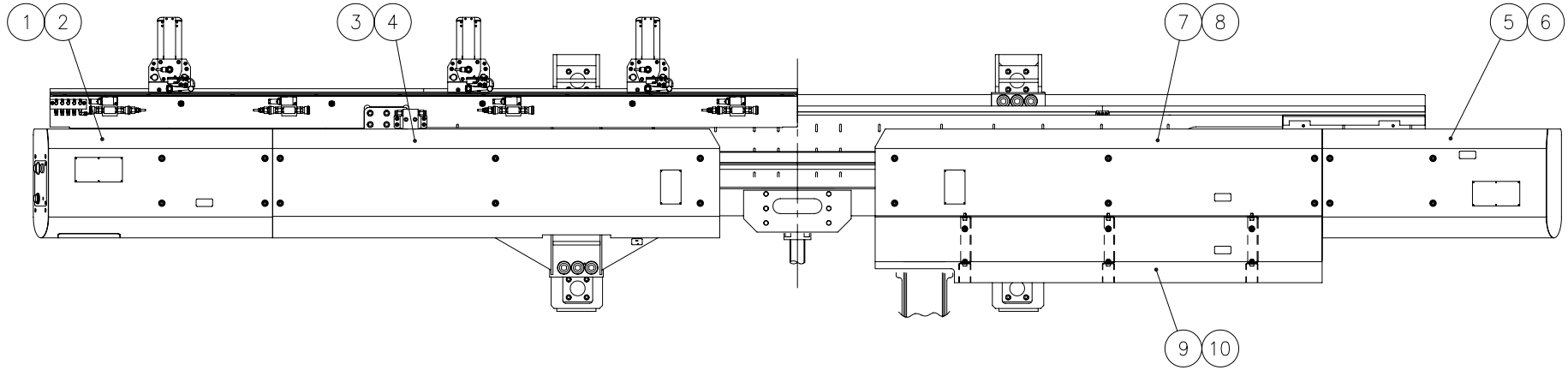

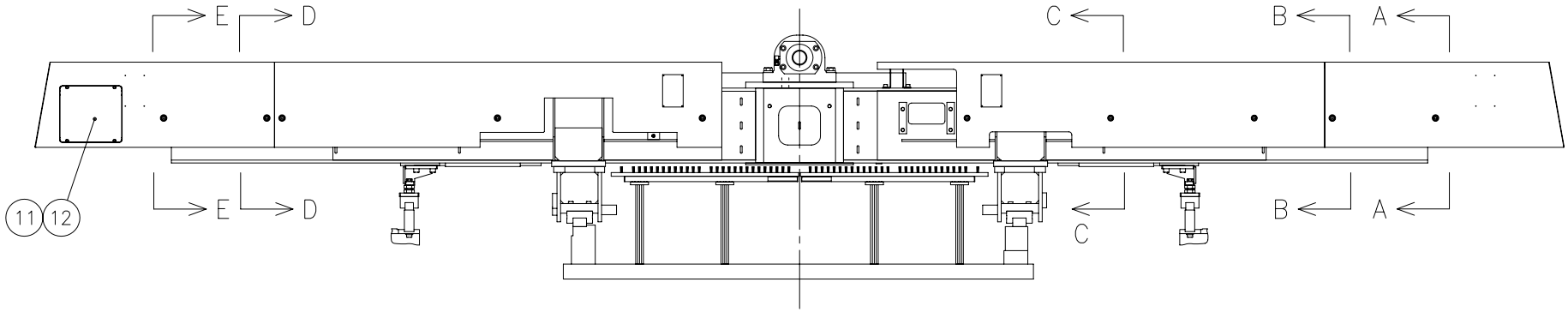

6874380#1A
6874380#2B

From Serial No.36102001 and after

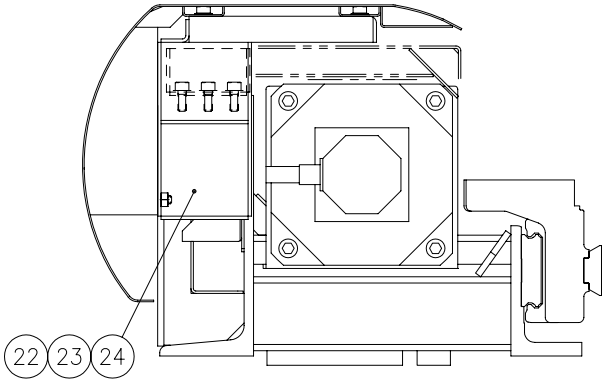

SECTION A–A

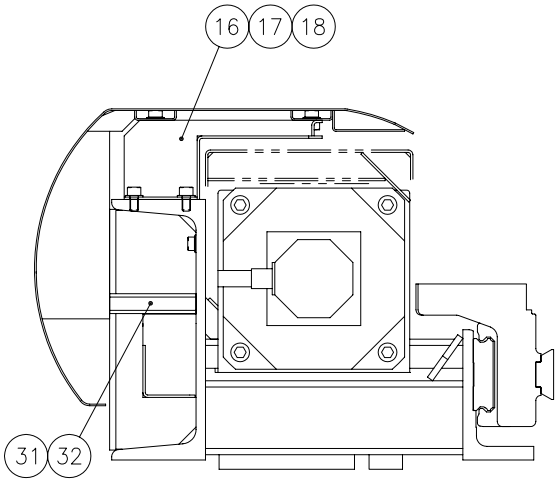

SECTION B–B

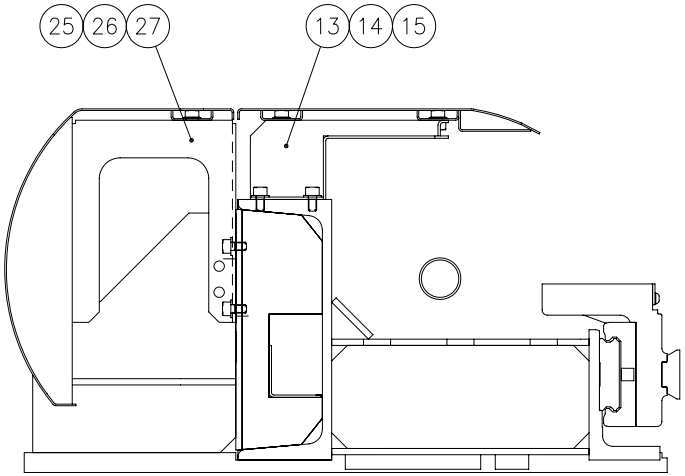

SECTION C–C

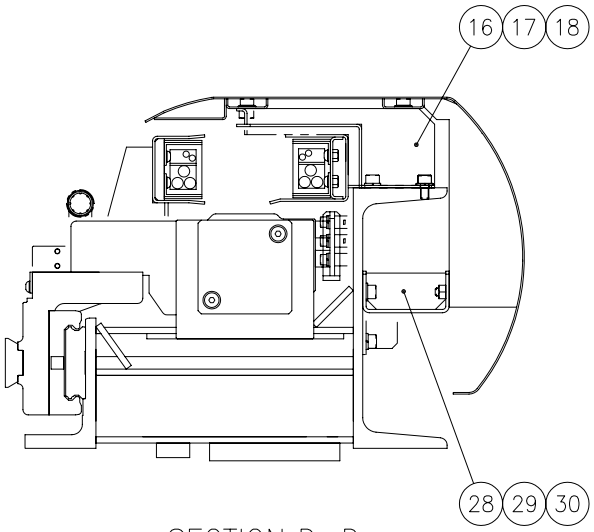

SECTION D–D

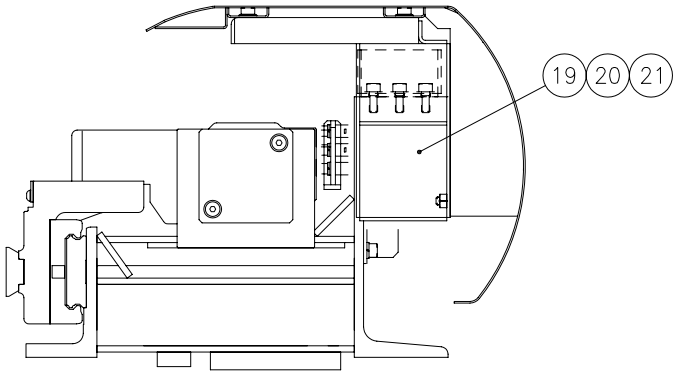

SECTION E–E

6874380#1A
6874380#2B

Slide(5)

From Serial No.36102001 and after

Index	Code	Parts Name	Drawing No.	Type	Maker	Q'ty	Note
1	74419107	Carriage Cover (F1)	6874381 B			1	
2	74382078	Flange Socket Bolt	P330468006	M8X15	NISSAN NEJI	6	
3	74419108	Carriage Cover (F2)	6874382 B			1	
4	74382078	Flange Socket Bolt	P330468006	M8X15	NISSAN NEJI	9	
5	74419109	Carriage Cover (R1)	6874383 B			1	
6	74382078	Flange Socket Bolt	P330468006	M8X15	NISSAN NEJI	6	
7	74419110	Carriage Cover (R2)	6874384 A			1	
8	74382078	Flange Socket Bolt	P330468006	M8X15	NISSAN NEJI	6	
9	74419111	Wiring Cover	6874385 B			1	
10	74382078	Flange Socket Bolt	P330468006	M8X15	NISSAN NEJI	6	
11	74417141	Carriage Cover (F1)	6874391			1	
12	36379029	Button Head Screw	P334500013	M6X10		4	
13	74417142	Cover Bracket (1)	6874411 A			1	
14	79565423	Hex Soc Cap Screw	P330230004	M8X15		2	
15	79567109	Washer	P336000006	8(Regular Round)		2	
16	74417143	Cover Bracket (2)	6874412 A			2	
17	79565423	Hex Soc Cap Screw	P330230004	M8X15		4	
18	79567109	Washer	P336000006	8(Regular Round)		4	
19	74419242	Cover Bracket (F)	6874413 C			1	

From Serial No.36102001 and after

Index	Code	Parts Name	Drawing No.	Type	Maker	Q'ty	Note
20	79564804	Hex Soc Cap Screw	P330230006	M8X20		3	
21	79567109	Washer	P336000006	8(Regular Round)		3	
22	74419243	Cover Bracket (R)	6874414 C			1	
23	79564804	Hex Soc Cap Screw	P330230006	M8X20		3	
24	79567109	Washer	P336000006	8(Regular Round)		3	
25	74417146	Cover Bracket (3)	6874415			3	
26	79565423	Hex Soc Cap Screw	P330230004	M8X15		6	
27	79567109	Washer	P336000006	8(Regular Round)		6	
28	74417147	Cover Bracket (4)	6874416			1	
29	79564804	Hex Soc Cap Screw	P330230006	M8X20		2	
30	79567109	Washer	P336000006	8(Regular Round)		2	
31	74417148	Stud	6874417	H22-90		1	
32	86280603	Socket Set Screw	P330550042	M8X25(Flat-end)		1	

From Serial No.36102001 and after

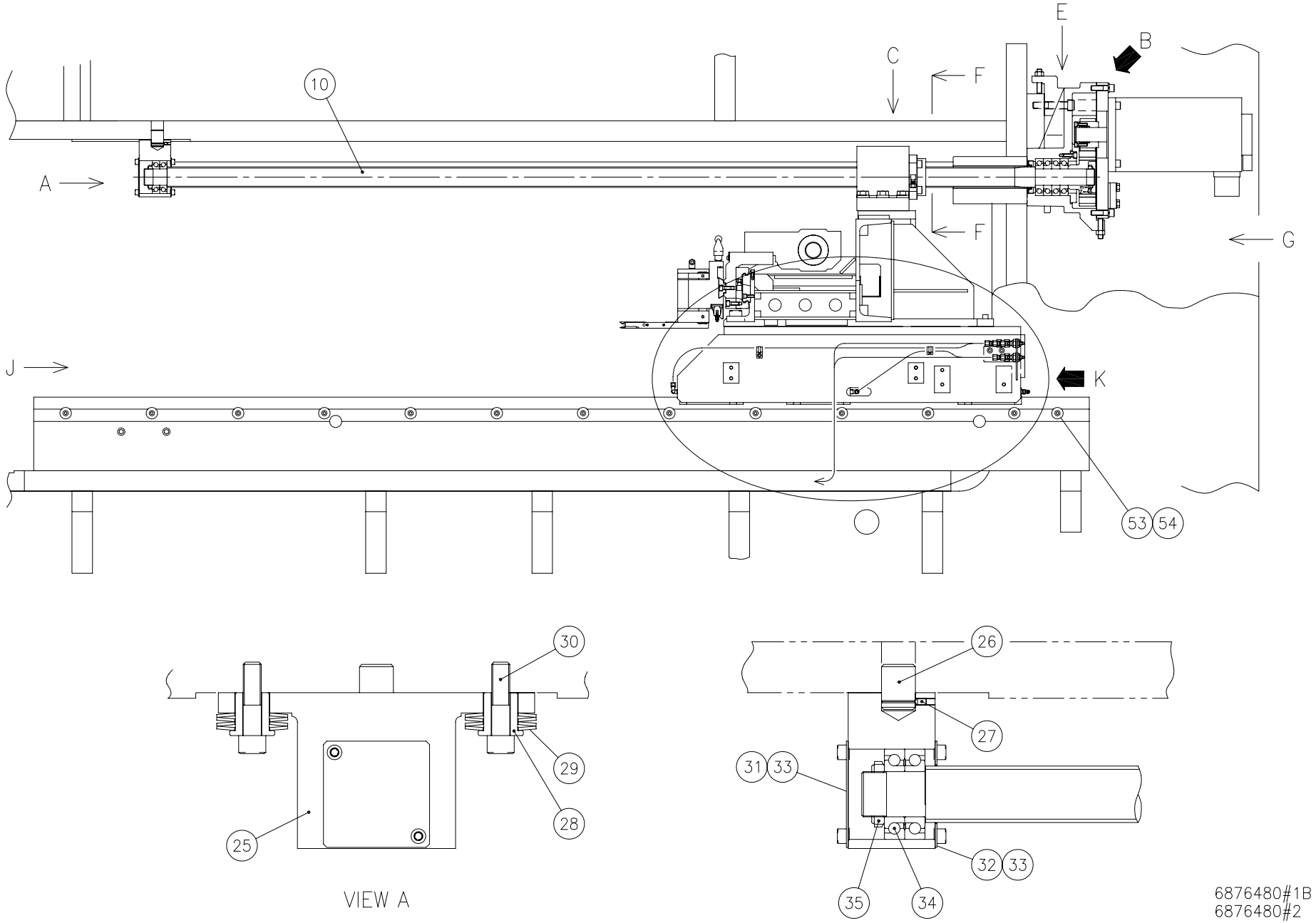

From Serial No.36102001 and after

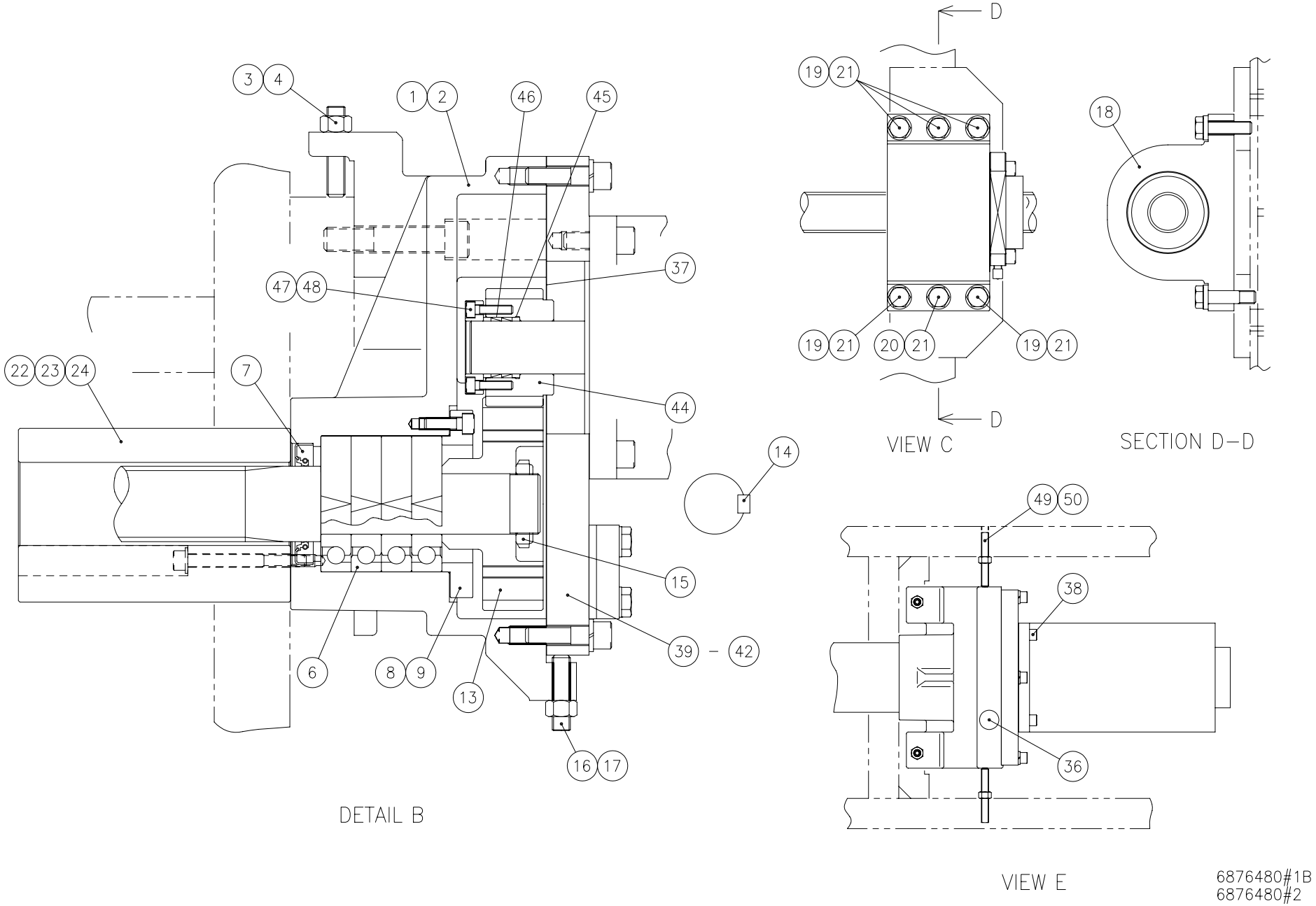

From Serial No.36102001 and after

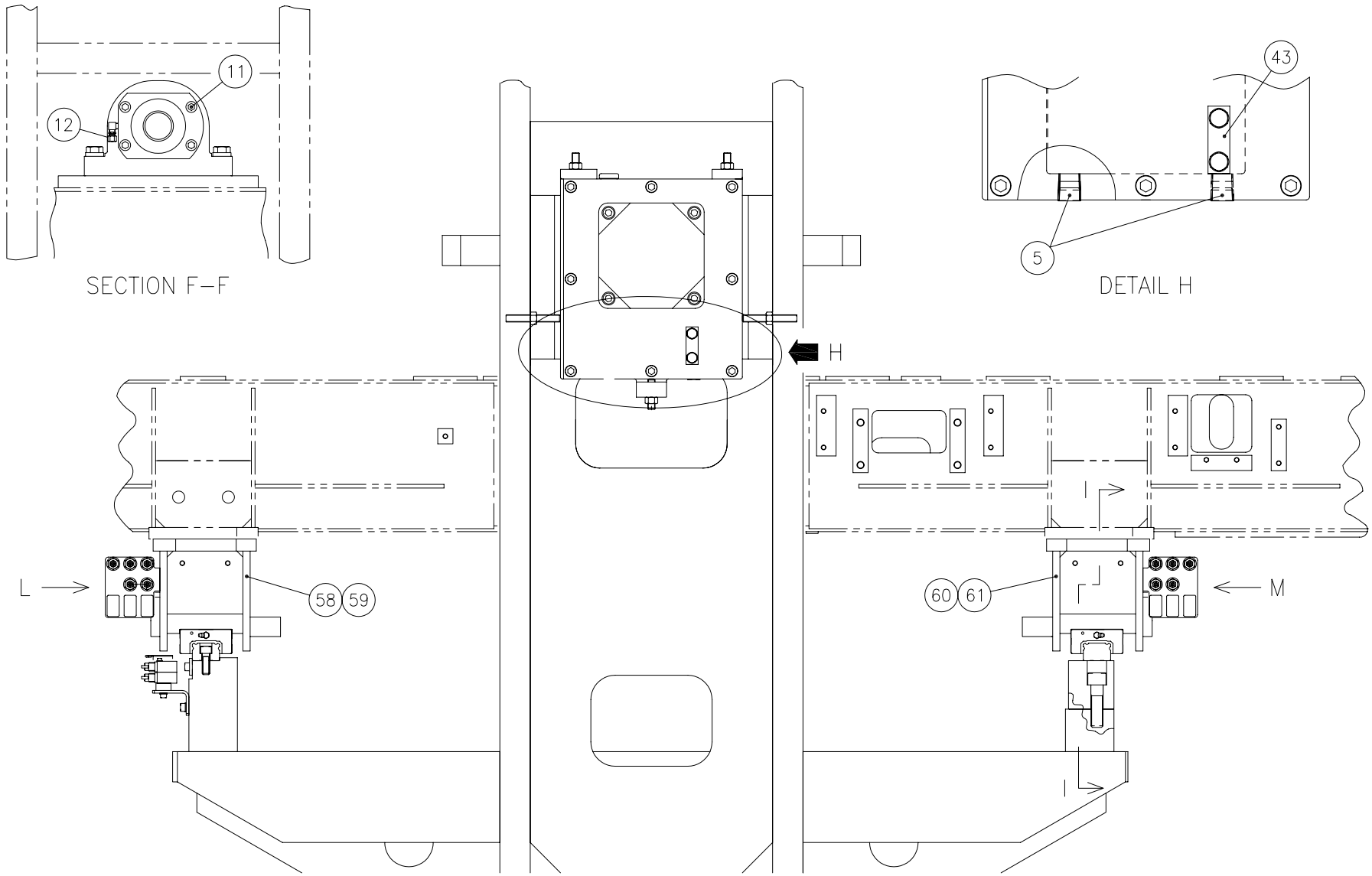

6876480#1B
6876480#2

From Serial No.36102001 and after

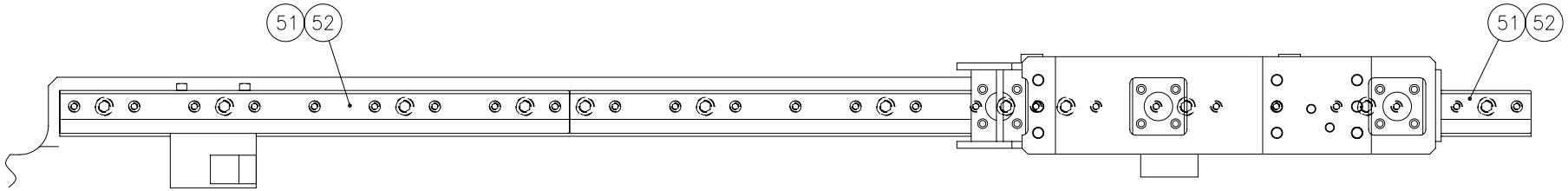

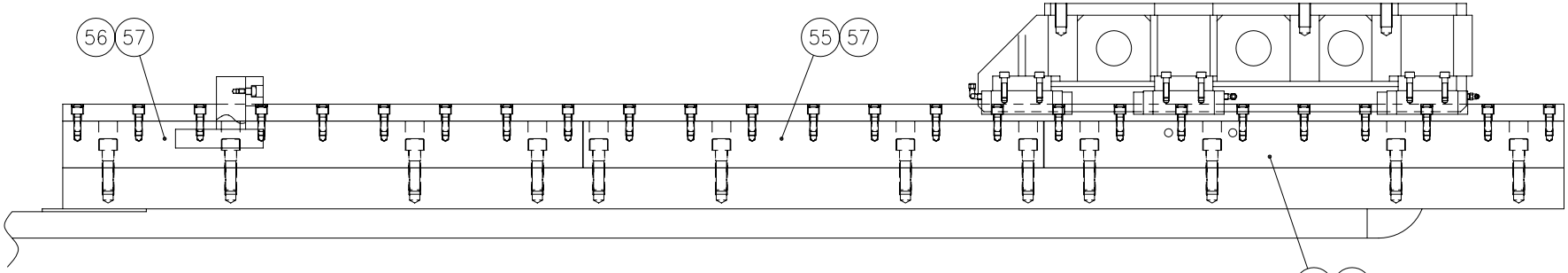

SECTION I–I

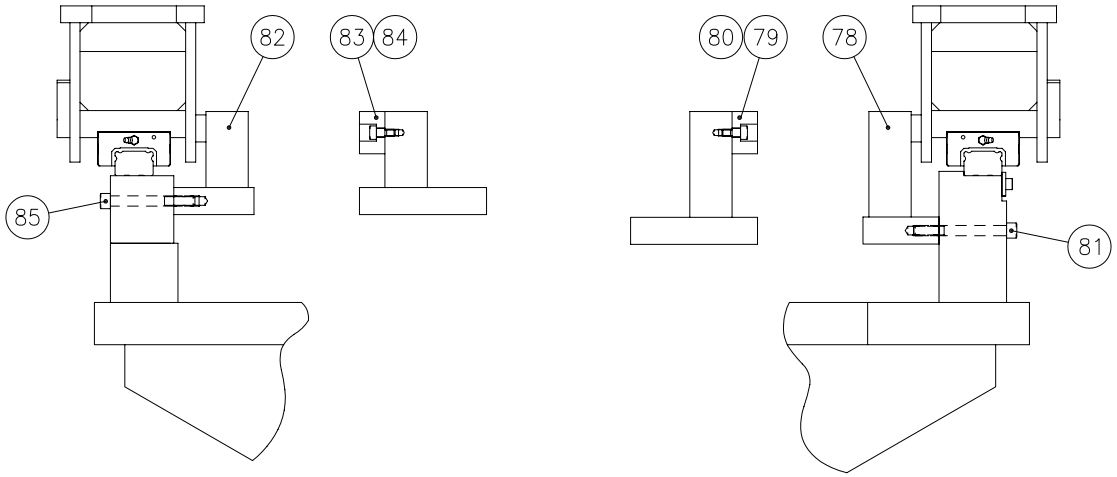

VIEW J

6876480#1B
6876480#2

From Serial No.36102001 and after

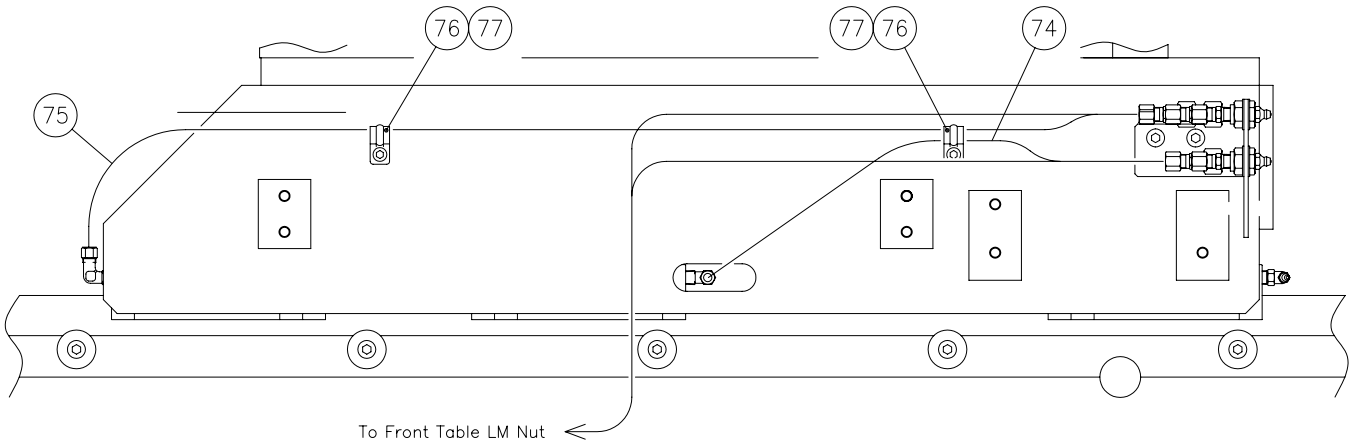

DETAIL K

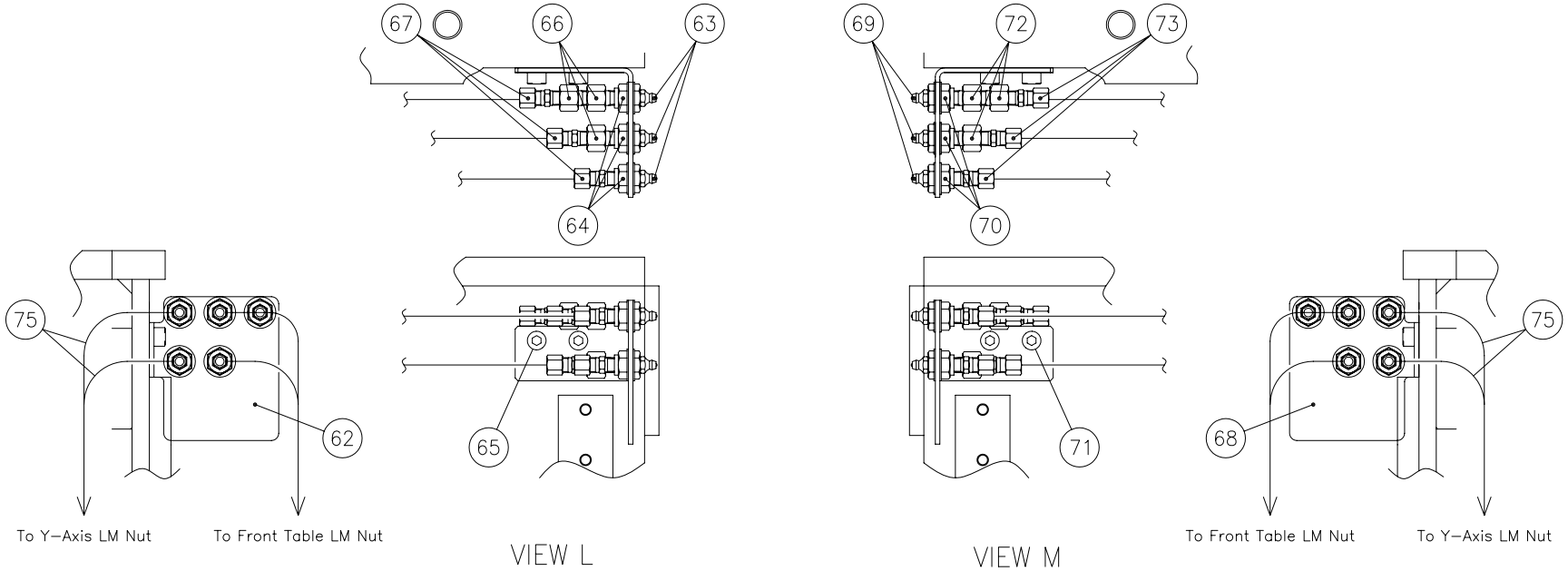

6876480#1B
6876480#2

Y-Axis

From Serial No.36102001 and after

Index	Code	Parts Name	Drawing No.	Type	Maker	Q'ty	Note
1	74419114	Y-axis Gear Box Assy	6876482 A			1	
2	36367712	Hex Soc Cap Screw	P330260040	M16X80		6	
3	74353709	Socket Set Screw	P330550067	M12X60(Flat-end)		2	
4	31183535	Nut	P332000007	M12		2	
5	36309118	Plug For Piping	P580208004	GM-1/2	GOSHO Works	2	
6	74388315	Complex Bearing	P404020541	40TAC90BSUC10PN7B	NSK & other	4	
7	74417354	Oil Seal	P590102113	SB05008012	NOK	1	
8	74388316	Y-axis Bearing Retainer	6597133			1	
9	79564804	Hex Soc Cap Screw	P330230006	M8X20		6	
10	74418367	Y-axis Ball Screw	7830955	W5020-183PSSX-C3Z50	NSK	1	
11	86213032	Hex Soc Cap Screw	P330250007	M12X40		4	
12	74722932	Bite Type Pipe Fitting	P585536004	MH-1061	AOI	1	
13	74569721	Y-axis Driven Gear	6826691			1	
14	74417355	Key (Driven Gear)	6597135 A			1	
15	78181709	Lock Nut	P406168003	FU08SC	FUJI SEIMITSU	1	
16	74353707	Socket Set Screw	P330550066	M12X50(Flat-end)		1	
17	31183535	Nut	P332000007	M12		1	
18	74419115	Y-axis Nut Holder	6828528 C			1	
19	74419244	Bolt	P330060082	M16X65-12.9		5	

From Serial No.36102001 and after

Index	Code	Parts Name	Drawing No.	Type	Maker	Q'ty	Note
20	74569726	Reamer Bolt	6812669			1	
21	74303705	Washer (M16)	6012794			6	
22	74415431	Damper (+Y)	6826278			1	
23	74300608	Hex Soc Cap Screw	P330230018	M8X80		4	
24	79567109	Washer	P336000006	8(Regular Round)		4	
25	74417357	Bearing Case (Y Driven)	6874261			1	
26	74388330	Guide Shaft	6593438 A			1	
27	74534629	Socket Set Screw	P330580020	M6X10Cone-end)		1	
28	74385827	Conical Spring Washer Guide	6593439			2	
29	74722775	Conical Spring Washer	P336155005	MDS30-1	HHK	8	
30	74535204	Hex Soc Cap Screw	P330260037	M16X65		2	
31	74417358	Bearing Cover	6874262			1	
32	74561631	Bearing Cover (R)	6597141 A			2	
33	10323205	Hex Soc Cap Screw	P330230001	M8X10		6	
34	74417359	Complex Bearing	7830983	6208DDUC3**DBCP13P5** AV2S	NSK	1	
35	78181709	Lock Nut	P406168003	FU08SC	FUJI SEIMITSU	1	
36	74561632	Oil Cap	P549038017	RCB-TYPE2-23	NOK	1	
37	74302207	Packing	0805560			1	
38	36110743	Hex Soc Cap Screw	P330250006	M12X35		4	

From Serial No.36102001 and after

Index	Code	Parts Name	Drawing No.	Type	Maker	Q'ty	Note
39	74389175	Motor Bracket	6597136 A			1	
40	74389176	Packing	6597149 A			1	
41	79316507	Hex Soc Cap Screw	P330250009	M12X50		8	
42	86610819	Spring Washer	P336050008	12		8	
43	74389177	Level Gauge	P600103040	AP-1-40(with Float)	KOHO	1	
44	74569723	Y-axis Drive Gear	6826692			1	
45	74562740	Spacer	0805558 B			2	
46	74382755	Shaft Clamp Element	P432308019	PSV3001-35X40	PETA	2	
47	74304512	Flange Terminal	0815519			1	
48	79567722	Hex Soc Cap Screw	P330220009	M6X20		4	
49	74562737	Socket Set Screw	P330550153	M12X90(Flat-end)		2	
50	31183535	Nut	P332000007	M12		2	
51	74419116	Y-axis LM Guide	7831047		THK	2	
52	36367655	Hex Soc Cap Screw	P330250005	M12X30		50	
53	74383474	Clamp Plate	6043285 B			13	
54	79565423	Hex Soc Cap Screw	P330230004	M8X15		13	
55	74417348	LM Guide Base (A)	6828525 A	FB90X75-78		1	
56	74417349	LM Guide Base (B)	6828526 A	FB90X75-89		2	
57	71357839	Hex Soc Cap Screw	P330270009	M20X70		12	

Index	Code	Parts Name	Drawing No.	Type	Maker	Q'ty	Note
58	74419117	Support Bracket (F)	6874263 A			1	
59	86611612	Hex Soc Cap Screw	P330240009	M10X35		12	
60	74419118	Support Bracket (R)	6874264 A			1	
61	86611612	Hex Soc Cap Screw	P330240009	M10X35		12	
62	74418368	Lubricating Bracket (YF)	6876821			1	
63	74304826	Grease Nipple	P560600004	A-PT1/8		5	
64	36525551	Bite Type Pipe Fitting	P585555001	PF-1/8-1/8-BS	JUNKOSHA	5	
65	79565423	Hex Soc Cap Screw	P330230004	M8X15		2	
66	74415541	Socket For Piping	P580008008	2040-02(1/8)	Yokohama Rubber	4	
67	74570523	Bite Type Pipe Fitting	P585538009	KC6-R1/8-B-1	IHARA Science	5	
68	74418369	Lubricating Bracket (YR)	6876822			1	
69	74304826	Grease Nipple	P560600004	A-PT1/8		5	
70	36525551	Bite Type Pipe Fitting	P585555001	PF-1/8-1/8-BS	JUNKOSHA	5	
71	79565423	Hex Soc Cap Screw	P330230004	M8X15		2	
72	74415541	Socket For Piping	P580008008	2040-02(1/8)	Yokohama Rubber	4	
73	74570523	Bite Type Pipe Fitting	P585538009	KC6-R1/8-B-1	IHARA Science	5	
74	31182979	Plastic Hose	P230224044	AX-1206(White)-0.5M	AOI	2	
75	31182979	Plastic Hose	P230224084	AX-1206(White)-1.2M	AOI	2	
76	10560113	Saddle For Conduct	P381017001	CH-6	DAIWA DENGYO	4	

From Serial No.36102001 and after

Index	Code	Parts Name	Drawing No.	Type	Maker	Q'ty	Note
77	79564305	Hex Soc Cap Screw	P330220006	M6X15		4	
78	74415432	Stopper (F)	6828523			1	
79	74415434	Damper (-Y)	6820486 A			1	
80	71360317	Shoulder Bolt	P338134062	MSB10-10	MISUMI	1	
81	36367659	Hex Soc Cap Screw	P330250021	M12X120		2	
82	74415433	Stopper (R)	6828524			1	
83	74415434	Damper (-Y)	6820486 A			1	
84	71360317	Shoulder Bolt	P338134062	MSB10-10	MISUMI	1	
85	79316145	Hex Soc Cap Screw	P330250018	M12X100		2	

Brush Table(1)-1/2 <Main Machine Front Table>

From Serial No.36102001 and after

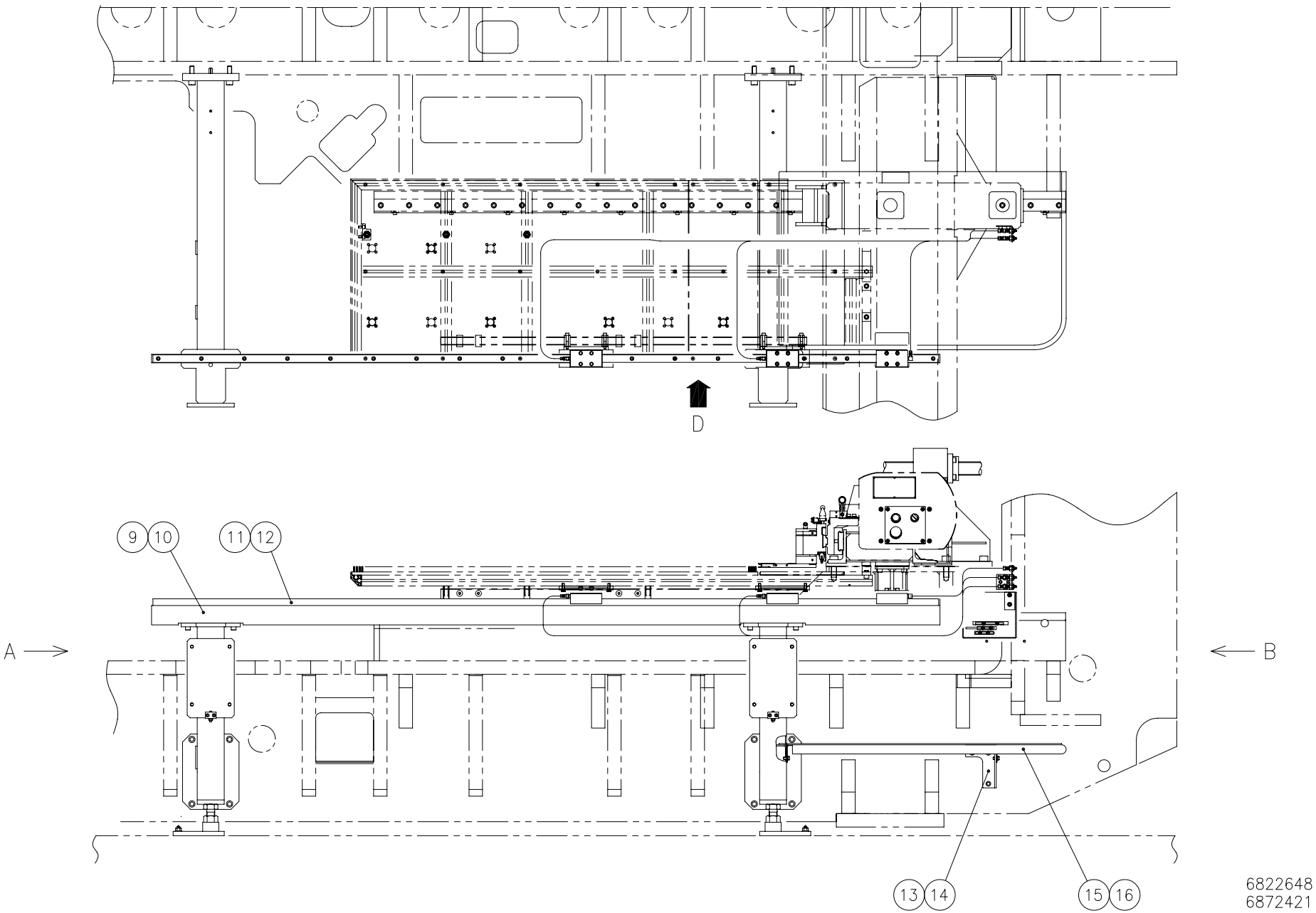

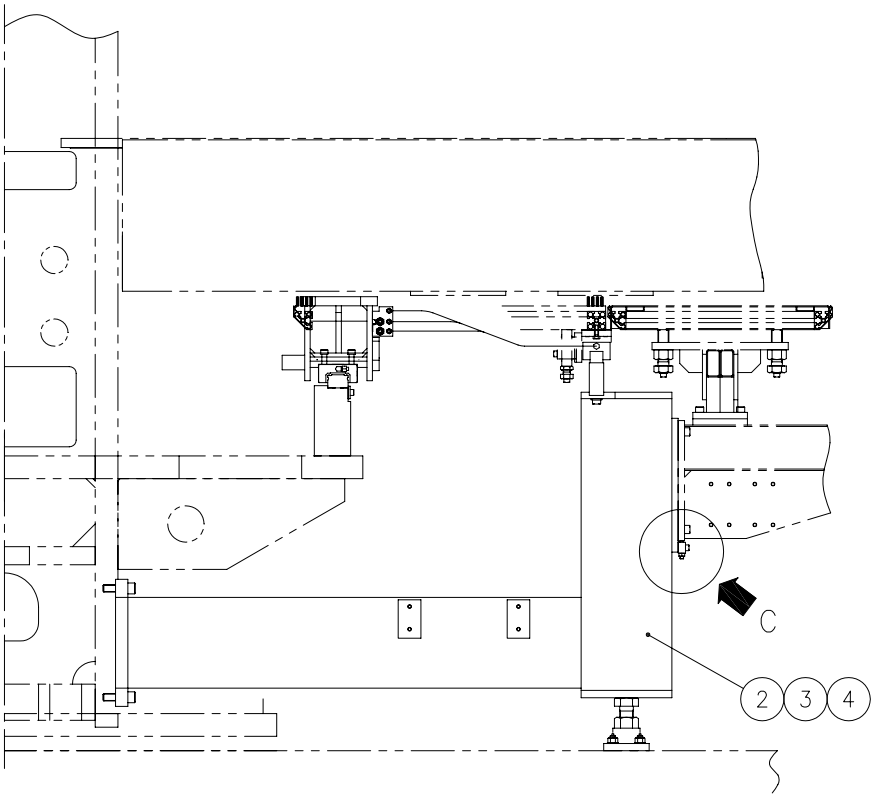

VIEW A

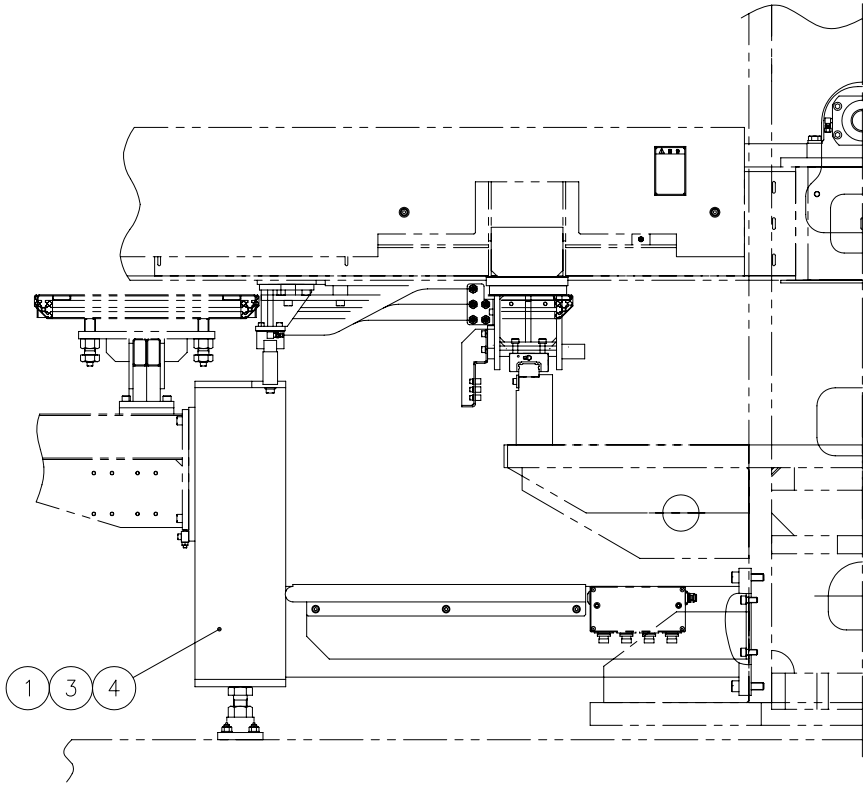

VIEW B

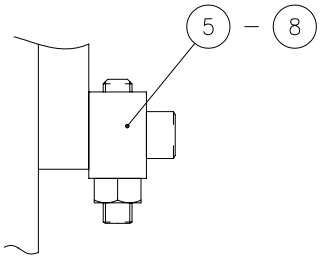

DETAIL C

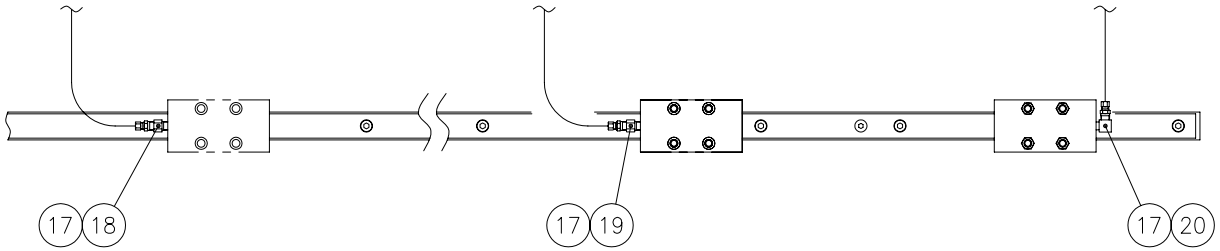

DETAIL D

6872648
6872421

Brush Table(1) From Serial No.36102001 and after

Index	Code	Parts Name	Drawing No.	Type	Maker	Q'ty	Note
1	74418370	Sub Guide Arm (R)	6872438			1	STD
1	74418371	Sub Guide Arm (R) PF	6872668			1	P&F
2	74418372	Sub Guide Arm (L)	6872439			1	STD
2	74418373	Sub Guide Arm (L) PF	6872669			1	P&F
3	74377038	Hex Soc Cap Screw	P330260035	M16X55		8	
4	74388357	Spring Pin	P337030132	13X40		2	
5	74415463	Adjusting Block	6871143			2	
6	79568702	Hex Soc Cap Screw	P330230008	M8X30		4	
7	74415442	Socket Set Screw	P330570030	M8X40(Dog-end)		2	
8	74300504	Nut	P332000005	M8		2	
9	74418374	LM Guide Rail	6872435			1	
10	36110743	Hex Soc Cap Screw	P330250006	M12X35		4	
11	74418393	LM Guide	7830939	TS302920ANP3-01KLS	NSK	1	
12	79568702	Hex Soc Cap Screw	P330230008	M8X30		19	
13	74568591	Floor Bracket	6812706			1	
14	79568704	Hex Soc Cap Screw	P330250004	M12X25		3	
15	74568592	Plate	6812707			1	
16	74382078	Flange Socket Bolt	P330468006	M8X15	NISSAN NEJI	6	
17	74722932	Bite Type Pipe Fitting	P585536004	MH-1061	AOI	3	

Unit No. 21

Brush Table(1)

From Serial No.36102001 and after

Index	Code	Parts Name	Drawing No.	Type	Maker	Q'ty	Note
18	31182979	Plastic Hose	P230224085	AX-1206(White)-2.5M	AOI	1	
19	31182979	Plastic Hose	P230224057	AX-1206(White)-1.5M	AOI	1	
20	31182979	Plastic Hose	P230224087	AX-1206(White)-0.8M	AOI	1	

Brush Table(2)-1/4 <Front Fix Table>

From Serial No.36102001 and after

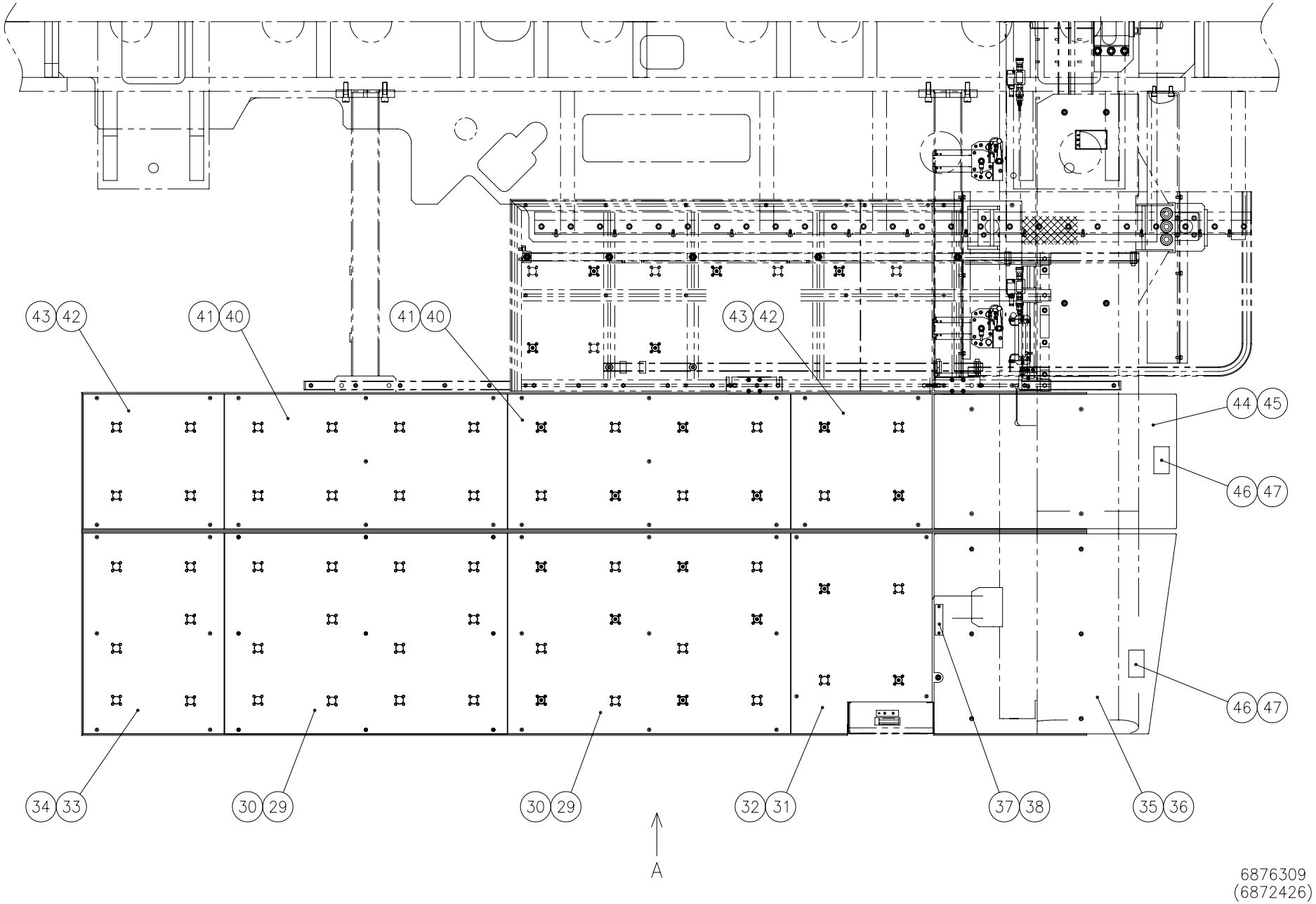

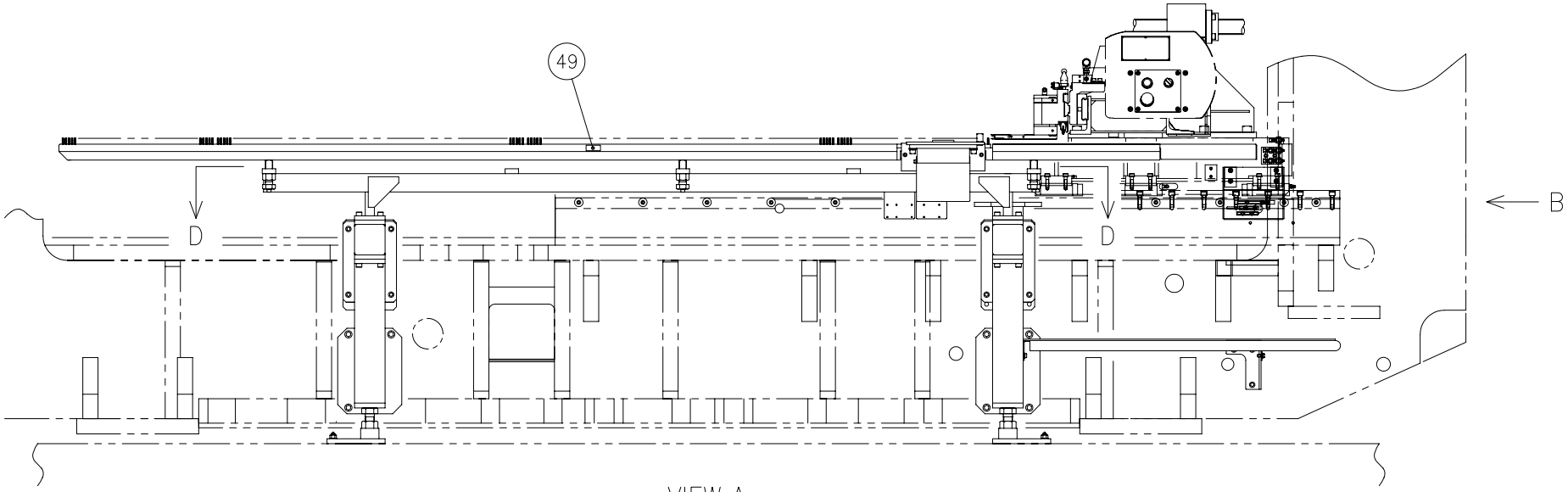

VIEW A

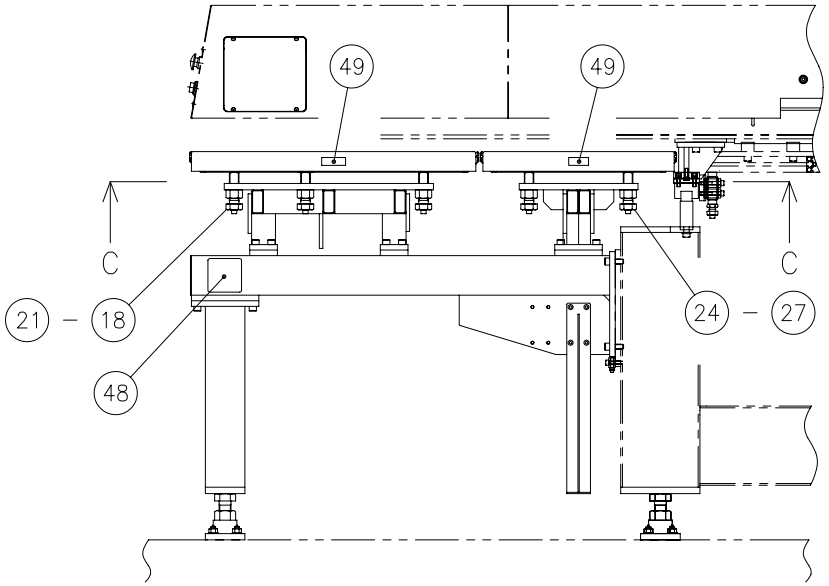

VIEW B

6876309
(6872426)

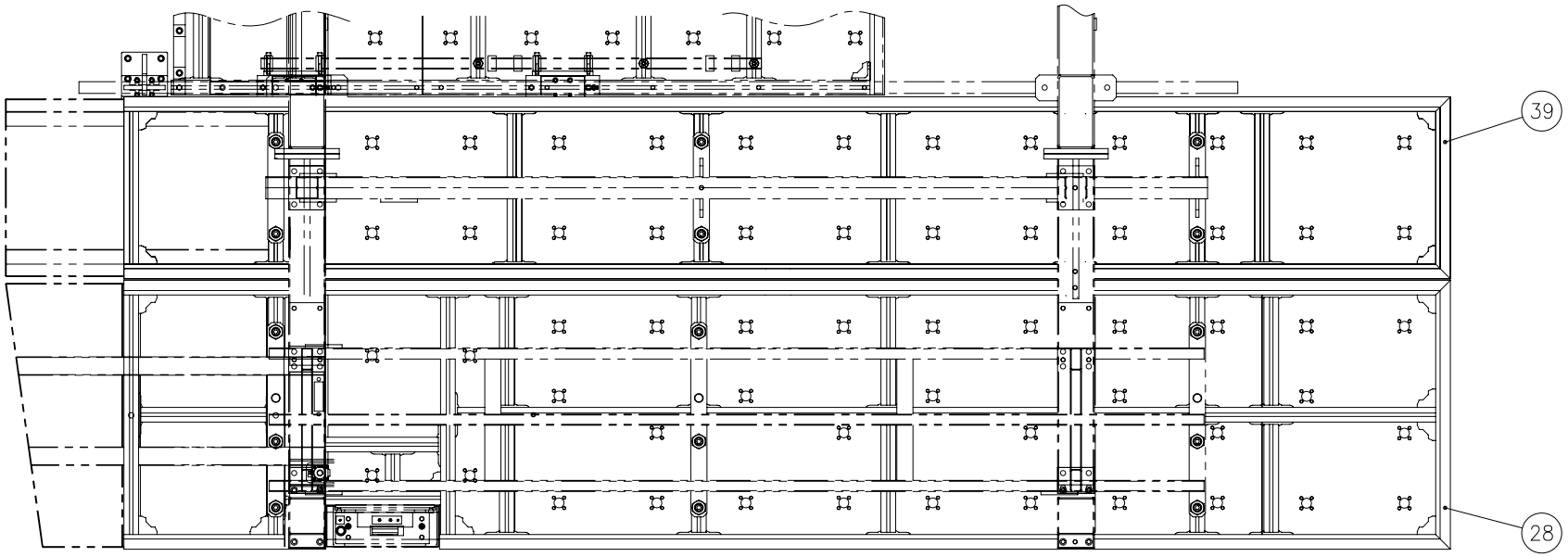

SECTION C–C

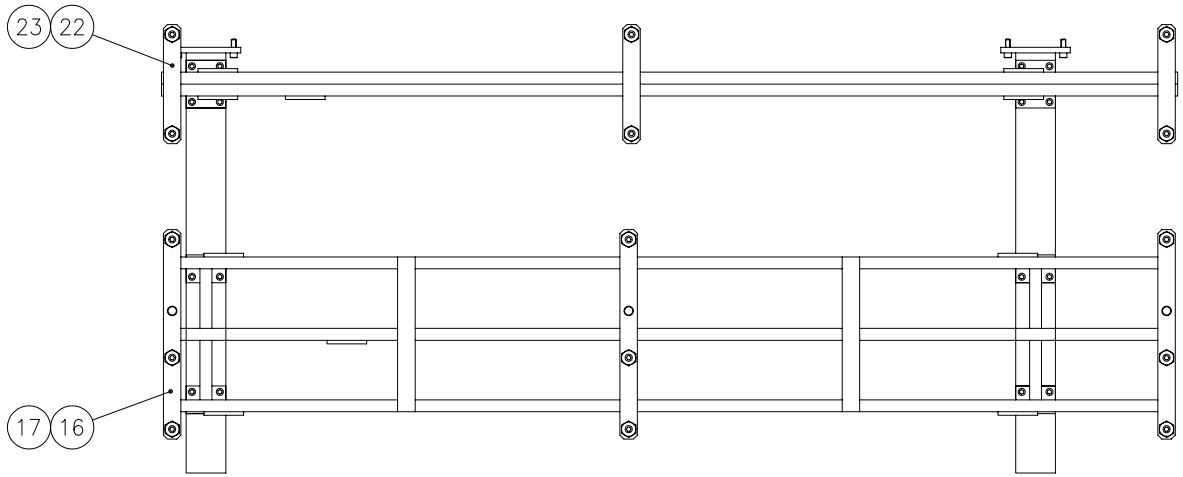

SECTION D–D

6876309
(6872426)

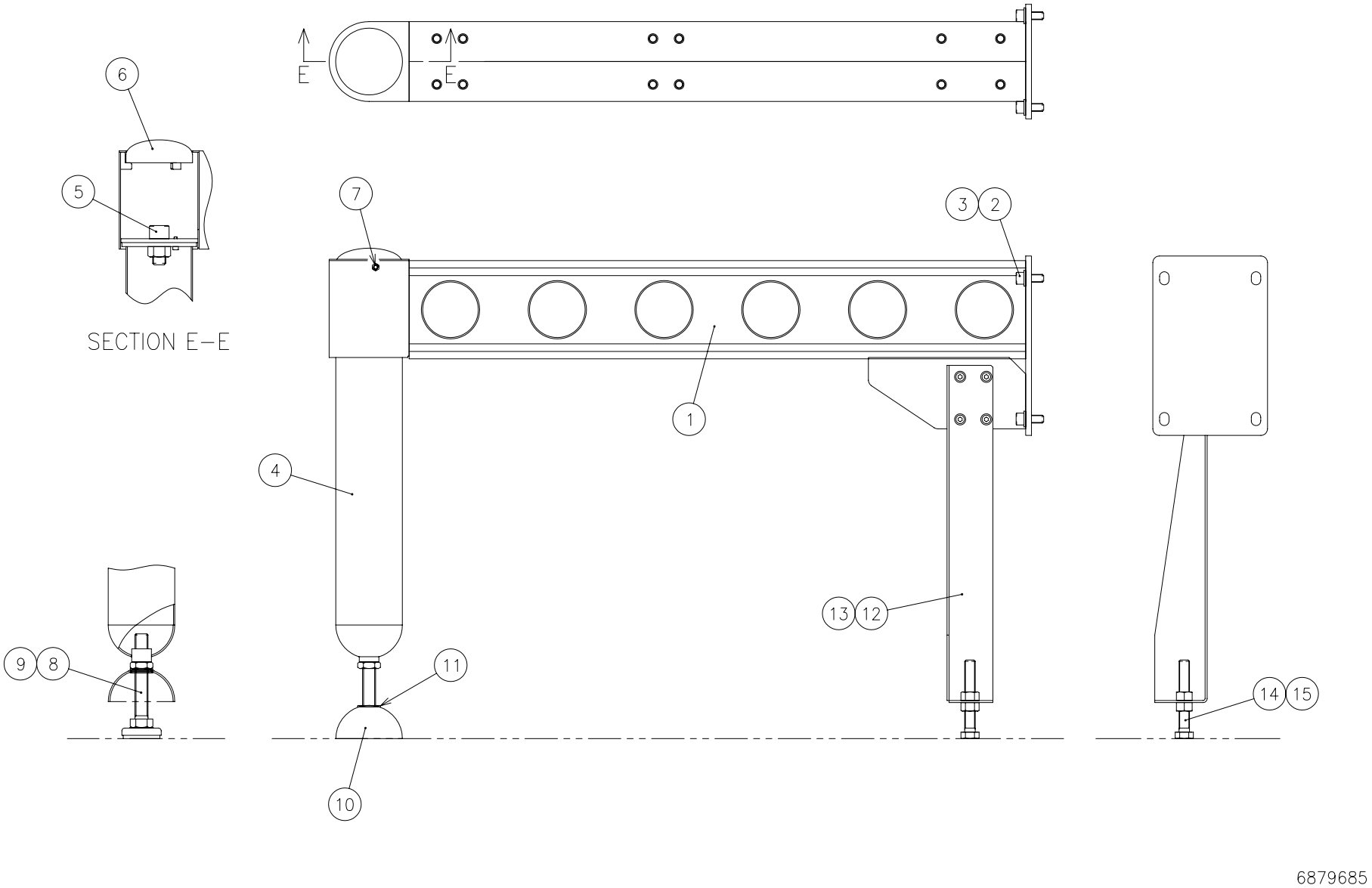
E
E
6
5
SECTION E–E
7
3
2
1
4
13
12
9
8
11
10
14
15
6879685

Brush Table(2)

From Serial No.36102001 and after

Index	Code	Parts Name	Drawing No.	Type	Maker	Q'ty	Note
1	74419472	Side Table Base (R)	380787100A			1	
2	36367655	Hex Soc Cap Screw	P330250005	M12X30		4	
3	86613931	Washer	P336000008	12(Regular Round)		4	
4	74419473	Stand	6879686			1	
5	36320521	Hex Soc Cap Screw	P330270003	M20X40		1	
6	74419474	Cap	6879678			1	
7	86620204	Socket Set Screw	P330590019	M6X10(Cup-end)		1	
8	74570064	Level Adjuster	P384022021	KC-280-0	TAKIGEN	1	
9	10380040	Nut	P332000023	M20(Thin)		1	
10	74419475	Level Adjuster Cover	3807879			1	
11	31100028	Bush For Cable	P229112053	C-30-NG-79-Q	TAKIGEN	1	
12	74419476	Shipping Bracket	3807874 A			1	
13	75420815	Flange Socket Bolt	P330468001	M8X20	NISSAN NEJI	4	
14	36163072	Bolt	P330060076	M16X120(All-thread)		1	
15	86611630	Nut	P332000066	M16(Type-1)		1	
16	74578812	Side Table Frame (1)	6823892 A			1	
17	36110743	Hex Soc Cap Screw	P330250006	M12X35		16	
18	74569742	Jack Screw	6821834			9	
19	71371592	Nut	P332000011	M24		9	

Brush Table(2)

From Serial No.36102001 and after

Index	Code	Parts Name	Drawing No.	Type	Maker	Q'ty	Note
20	79316161	Hex Soc Cap Screw	P330230024	M8X110		9	
21	79567109	Washer	P336000006	8(Regular Round)		9	
22	74578813	Side Table Frame (2)	6823893 A			1	
23	36110743	Hex Soc Cap Screw	P330250006	M12X35		8	
24	74569742	Jack Screw	6821834			6	
25	71371592	Nut	P332000011	M24		6	
26	79316161	Hex Soc Cap Screw	P330230024	M8X110		6	
27	79567109	Washer	P336000006	8(Regular Round)		6	
28	74419477	Fixed Table (F) A	7830940 A		NIC	1	
29	74571312	MDF Brush (K-4)	6823663 A			2	
30	74722756	Button Head Screw	P334500021	M8X25		18	
31	74571269	MDF Brush (K-5)	6821845 B			1	
32	74722756	Button Head Screw	P334500021	M8X25		4	
33	74571270	MDF Brush (K-8)	6823665 A			1	
34	74722756	Button Head Screw	P334500021	M8X25		6	
35	74418378	Cover Table (F-1)	6823013 B			1	
36	79565423	Hex Soc Cap Screw	P330230004	M8X15		6	
37	74569764	Maintenance Cover	6812712			1	
38	31179660	Button Head Screw	P334500009	M5X10		2	

Brush Table(2)

From Serial No.36102001 and after

Index	Code	Parts Name	Drawing No.	Type	Maker	Q'ty	Note
39	74578815	Fixed Table (F) B	7830865		NIC	1	
40	74415176	MDF Brush (K-1)	6823635			2	3.2mm
40	74575212	MDF Brush (K-1)	6823846			2	4.5mm
41	74722756	Button Head Screw	P334500021	M8X25		14	
42	74415177	MDF Brush (K-3)	6823636			2	3.2mm
42	74575185	MDF Brush (K-3)	6823847			2	4.5mm
43	74722756	Button Head Screw	P334500021	M8X25		8	
44	74415449	Cover Table (F-2)	6823844 A			1	
45	79565423	Hex Soc Cap Screw	P330230004	M8X15		4	
46	71362136	Legend Plate (Warning)(3)	6045924			2	English
46	71362135	Legend Plate (Warning)(3) FRA	6045078			2	French
46	71362137	Legend Plate (Warning)(3) GER	6046718			2	German
46	71362138	Legend Plate (Warning)(3) ITA	6046728			2	Italian
46	74415924	Legend Plate (Warning)(3)	6816795			2	Chinese
47	74326603	Blind Rivet	P339208001	NTA3-2	LOBTEX	8	
48	74419480	Legend Plate (Caution) E	3809322	(DO NOT LIFT HERE)		2	English
48	74419481	Legend Plate (Caution) F	3809323			2	French
48	74419479	Legend Plate (Caution) G	3809321			2	German
48	74419482	Legend Plate (Caution) I	3809324			2	Italian

Brush Table(2)

From Serial No.36102001 and after

Index	Code	Parts Name	Drawing No.	Type	Maker	Q'ty	Note
48	74419478	Legend Plate (Caution) C	3809319			2	Chinese
49	71130447	Legend Plate (Do Not Get On)	0840546			5	
50	74417405	Sticker (Fixed Table)(Export)	6871975			1	List Only
51	74419483	Adhesive Tape	P379108025	FE-6061 (20mm)	FANTAC	5	1M (List Only)

Brush Table(3)-1/3 <Front Move Table>

From Serial No.36102001 and after

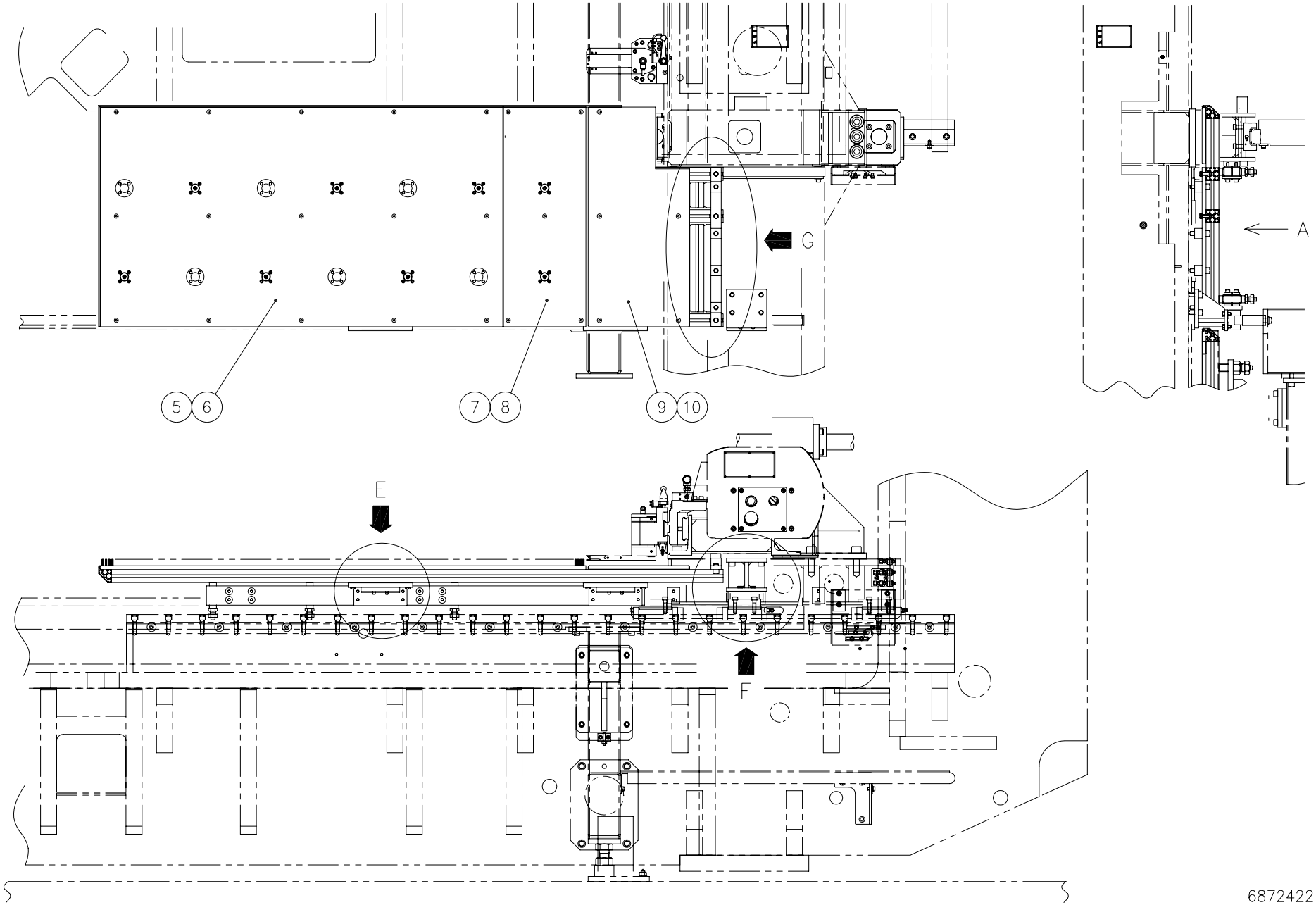

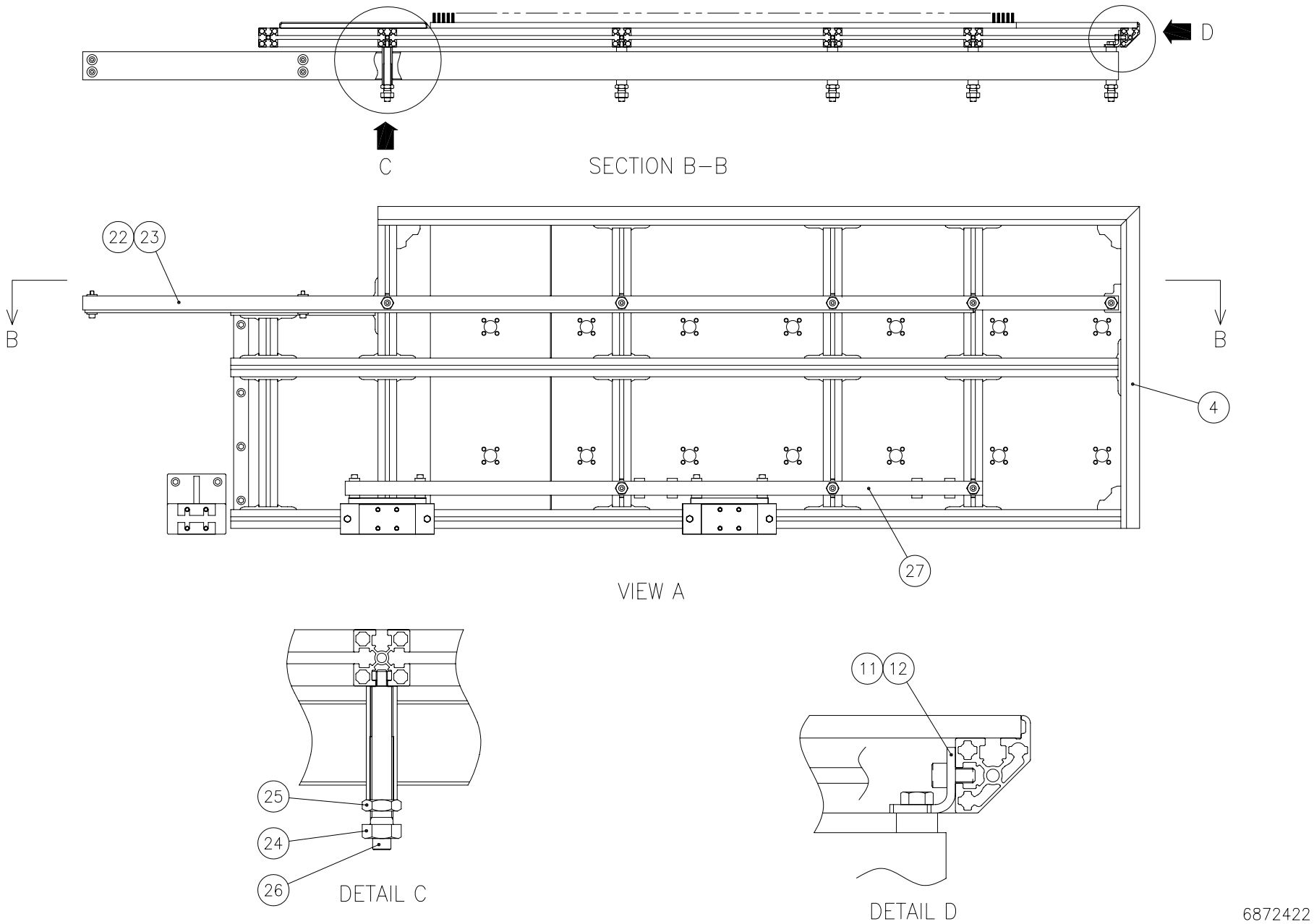
D
C
SECTION B–B
22
23
B
B
4
27
VIEW A
25
24
26
DETAIL C
11
12
DETAIL D
6872422

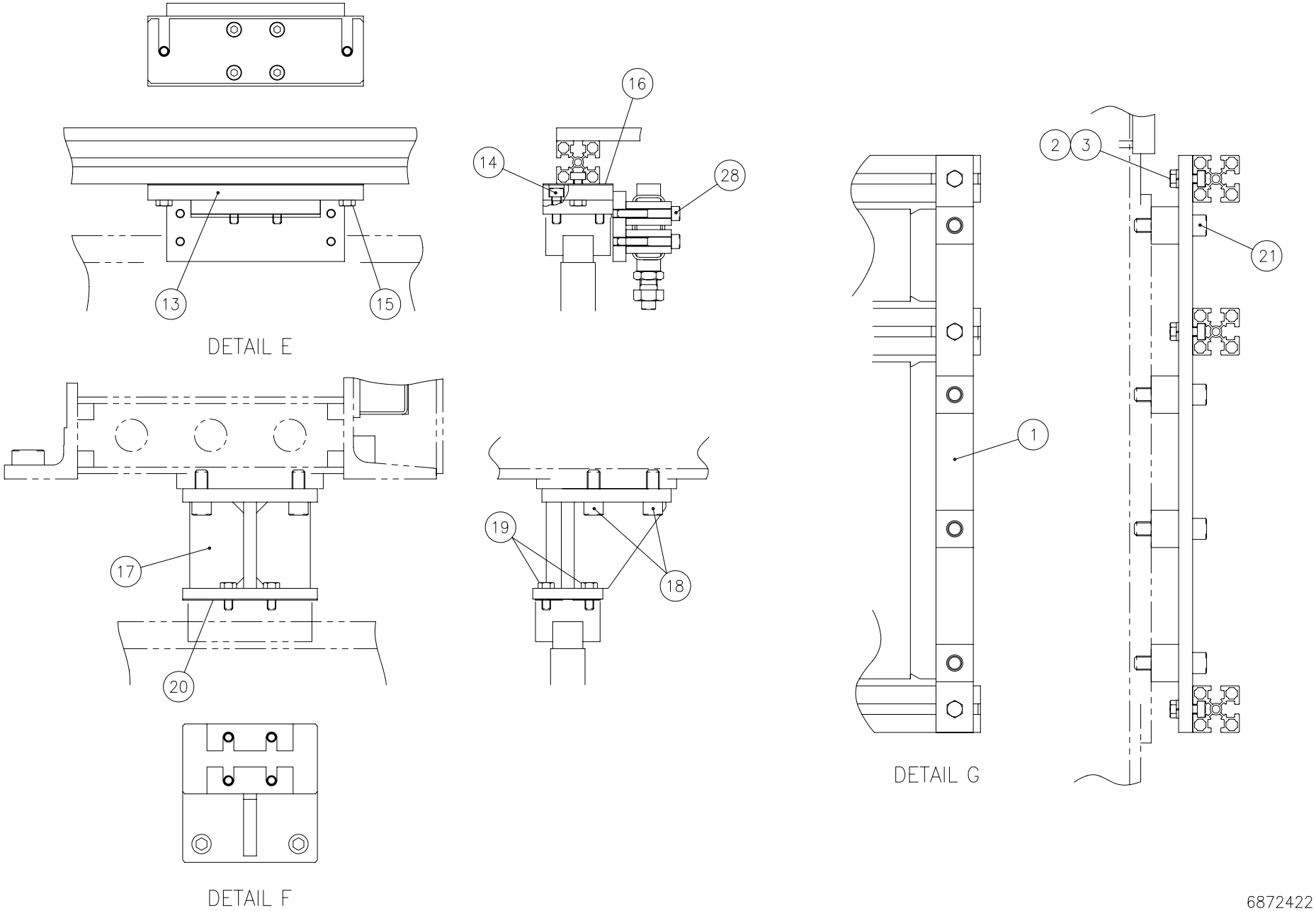
16
14
28
13
15
DETAIL E
2
3
21
1
17
20
19
18
DETAIL G
DETAIL F
6872422

Brush Table(3)

From Serial No.36102001 and after

Index	Code	Parts Name	Drawing No.	Type	Maker	Q'ty	Note
1	74415465	Table Spacer	6828647			1	
2	74183005	Bolt	P330030007	M8X25		3	
3	86610326	Spring Washer	P336050006	8		3	
4	74418375	Moving Table (F)	7830942		NIC	1	
5	74415175	MDF Brush (I-1)	6823682			1	3.2mm
5	74571284	MDF Brush (I-1)	6823627 A			1	4.5mm
6	74722756	Button Head Screw	P334500021	M8X25		15	
7	74578826	MDF Brush (I-2)	6823683			1	3.2mm
7	74571327	MDF Brush (I-2)	6823628 A			1	4.5mm
8	74722756	Button Head Screw	P334500021	M8X25		5	
9	74415444	Cover Table (S-F)	6828649			1	
10	79565423	Hex Soc Cap Screw	P330230004	M8X15		5	
11	74415467	Angle	6828651 A			1	
12	79565423	Hex Soc Cap Screw	P330230004	M8X15		2	
13	74418396	LM Support	6872480			2	
14	79566121	Hex Soc Cap Screw	P330230007	M8X25		8	
15	74183005	Bolt	P330030007	M8X25		4	
16	74571308	Shim	6823604			2	
17	74415468	Moving Table Bracket	6828648			1	

Brush Table(3)

From Serial No.36102001 and after

Index	Code	Parts Name	Drawing No.	Type	Maker	Q'ty	Note
18	36367655	Hex Soc Cap Screw	P330250005	M12X30		4	
19	36176605	Bolt	P330030006	M8X20		4	
20	74571309	Shim	6826306			2	
21	79316507	Hex Soc Cap Screw	P330250009	M12X50		4	
22	74418397	Table Guide	6872436	R60X30X2.3		1	
23	10443146	Hex Soc Cap Screw	P330230012	M8X50		4	
24	74415446	Adjustable Bolt	6822812 A			8	
25	78180815	Nut	P332000022	M16(Thin)		8	
26	74707962	Hex Soc Cap Screw	P330230026	M8X120		8	
27	74418398	Auxiliary Arm (1)	6872481	R60X30X2.3		1	
28	10443146	Hex Soc Cap Screw	P330230012	M8X50		8	

Brush Table(4) <Relay Box (F)>

From Serial No.36102001 and after

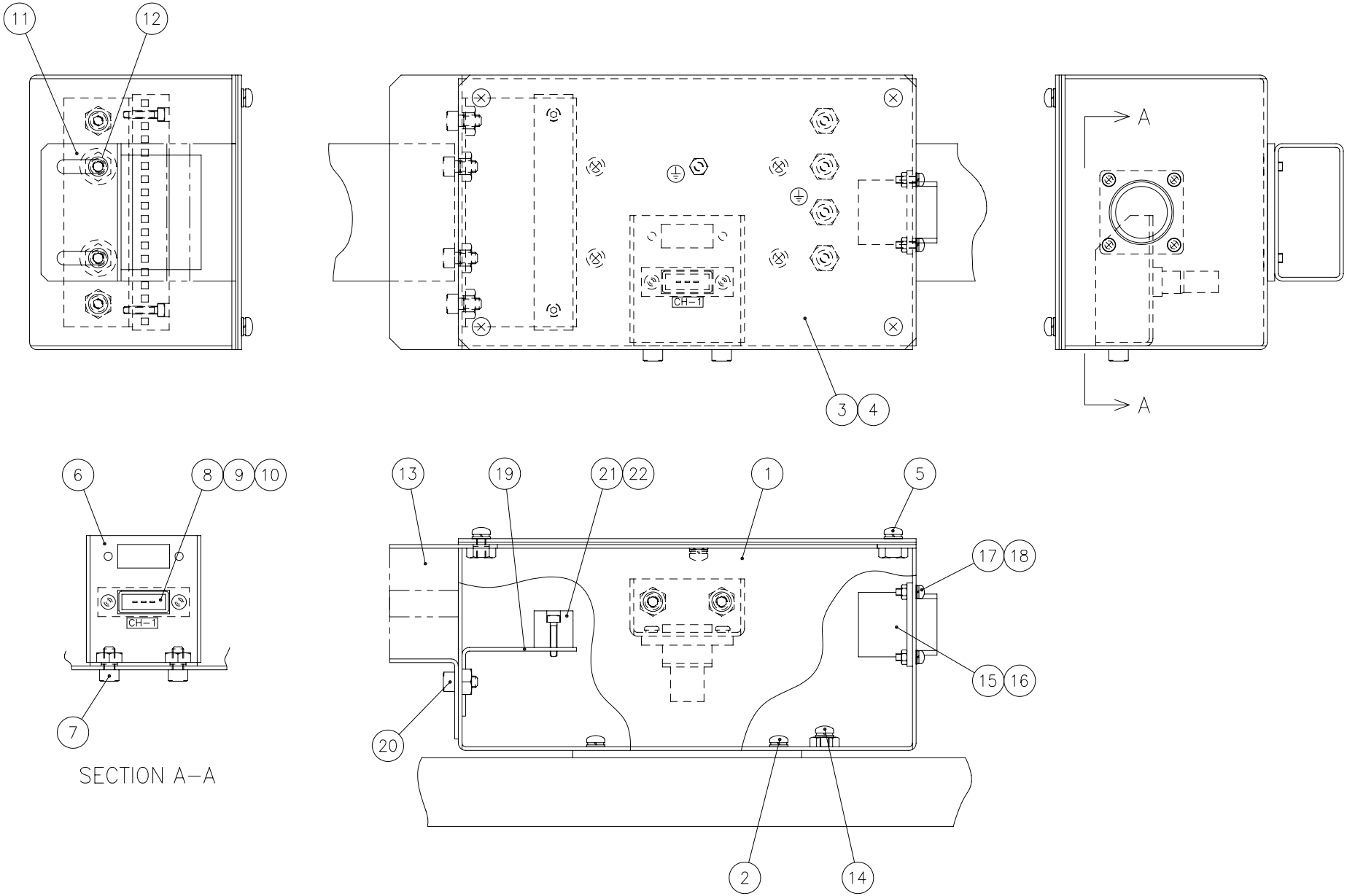

Brush Table(4) From Serial No.36102001 and after

Index	Code	Parts Name	Drawing No.	Type	Maker	Q'ty	Note
1	74415498	Relay Box (F)	6824761 A			1	
2	74570030	Pan Head Screw with Washer	P334200115	M4X10(Chromate P-4)		4	
3	74575225	Relay Box (F) Cover	6824762			1	
4	74575227	Packing (F)	6824763			1	
5	74570033	Pan Head Screw with Washer	P334200134	M5X10(Chromate P-4)		4	
6	74575149	Housing Plate (FC)	6826465			1	
7	79573416	Hex Soc Cap Screw	P330210003	M5X10		2	
8	74386502	Rectangle Connector	P862042073	1-178802-3	AMP	1	
9	74386503	Plug Type Terminal	P862142036	175289-5	AMP	3	
10	74386505	Accessory For Connector	P862182002	900128-2	AMP	2	
11	74387019	Cable Clamp (FC)	6596069			1	
12	79573416	Hex Soc Cap Screw	P330210003	M5X10		2	
13	74387020	Sponge Rubber	P230580063	CR-T20X20X60		2	
14	74569811	Pan Head Screw with Washer	P334200113	M4X6(Chromate P-4)		5	(Ground)
15	74521705	Plastic R Connector	P862032003	206036-1	AMP	1	
16	74384510	Plug Type Terminal	P862142020	66400-1	AMP	11	
17	74570051	Pan Head Screw with Washer	P334200109	M3X10(Chromate P-4)		4	
18	74307616	Nut	P332000001	M3		4	
19	74575145	Bracket (F)	6824764			1	

Unit No. 24

Brush Table(4)

From Serial No.36102001 and after

Index	Code	Parts Name	Drawing No.	Type	Maker	Q'ty	Note
20	79573416	Hex Soc Cap Screw	P330210003	M5X10		2	
21	74569809	Block Terminal	P864008047	MK4/16KRG	WEIDMULLER	1	
22	79316101	Hex Soc Cap Screw	P330200006	M3X15		2	

Brush Table(5) <Relay Box (FC)>

From Serial No.36102001 and after

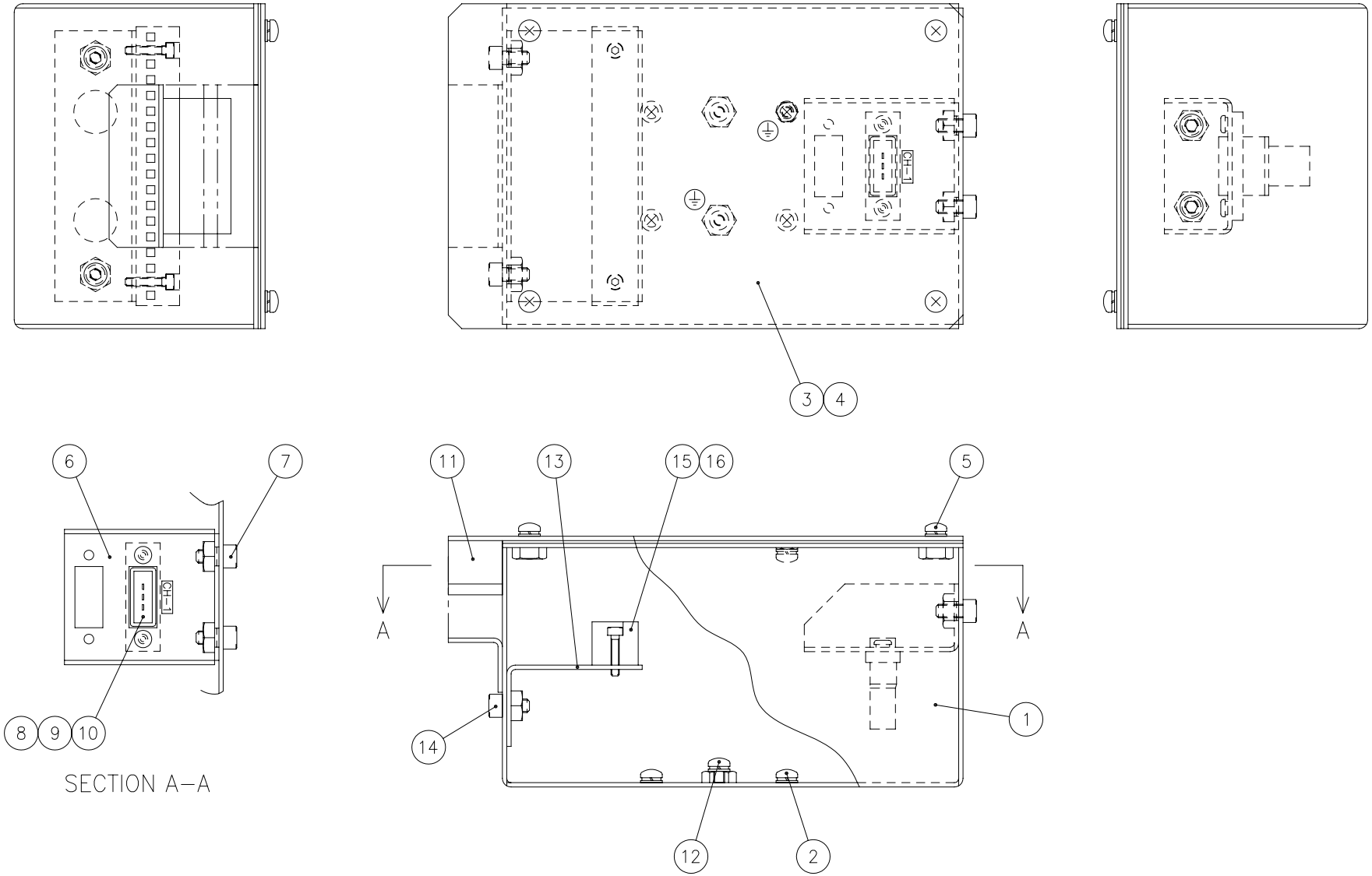

6824766

Unit No. 25

Brush Table(5) From Serial No.36102001 and after

Index	Code	Parts Name	Drawing No.	Type	Maker	Q'ty	Note
1	74575144	Relay Box (FC)	6824767			1	
2	74570030	Pan Head Screw with Washer	P334200115	M4X10(Chromate P-4)		4	
3	74575147	Relay Box (FC) Cover	6824768			1	
4	74575224	Packing (FC)	6824769			1	
5	74570033	Pan Head Screw with Washer	P334200134	M5X10(Chromate P-4)		4	
6	74575149	Housing Plate (FC)	6826465			1	
7	79573416	Hex Soc Cap Screw	P330210003	M5X10		2	
8	74386502	Rectangle Connector	P862042073	1-178802-3	AMP	1	
9	74386503	Plug Type Terminal	P862142036	175289-5	AMP	3	
10	74386505	Accessory For Connector	P862182002	900128-2	AMP	2	
11	74387020	Sponge Rubber	P230580063	CR-T20X20X60		2	
12	74569811	Pan Head Screw with Washer	P334200113	M4X6(Chromate P-4)		3	(Ground)
13	74575145	Bracket (F)	6824764			1	
14	79573416	Hex Soc Cap Screw	P330210003	M5X10		2	
15	74569809	Block Terminal	P864008047	MK4/16KRG	WEIDMULLER	1	
16	79316101	Hex Soc Cap Screw	P330200006	M3X15		2	

Brush Table(6) <Pneumatic Locate Pin>

From Serial No.36102001 and after

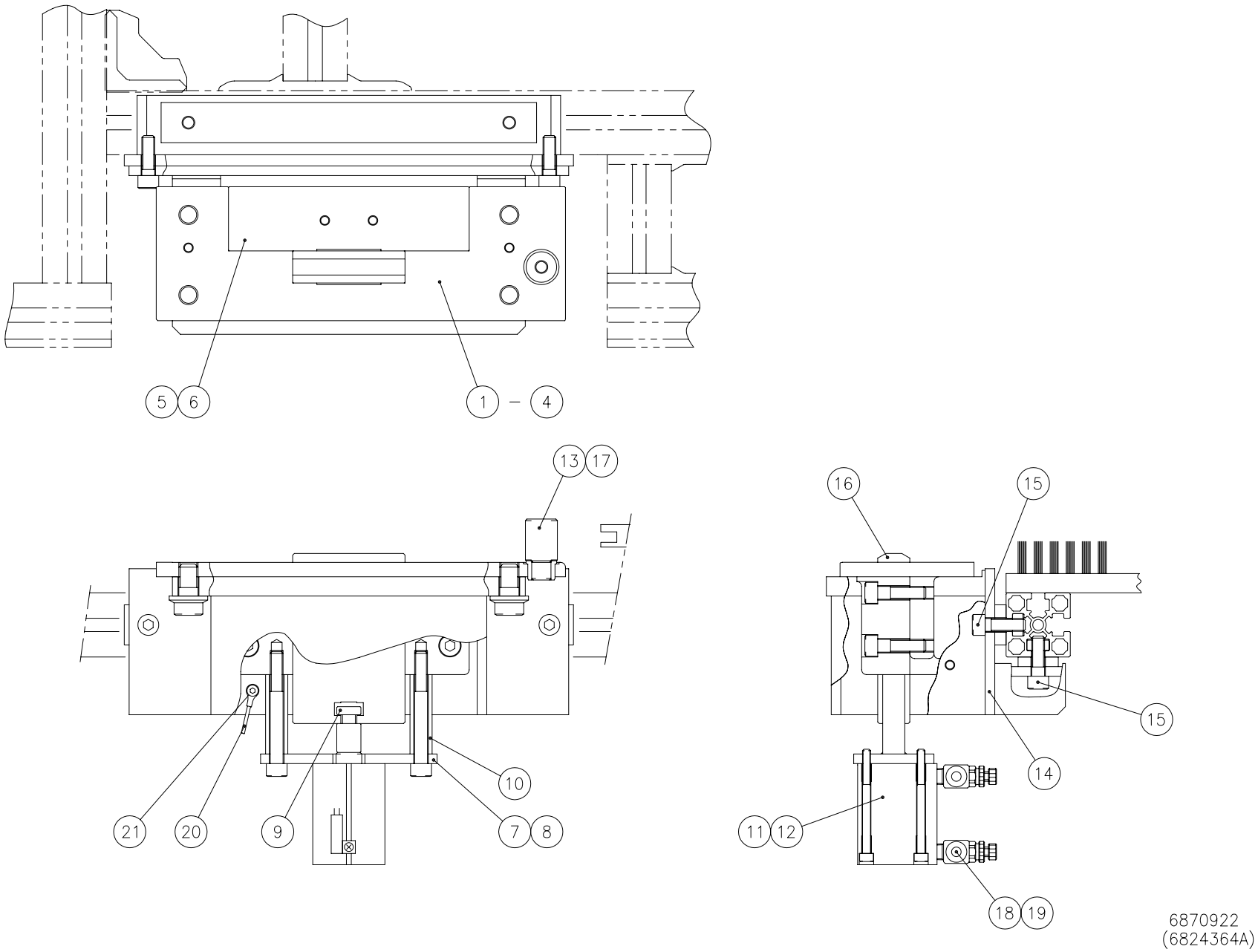

Brush Table(6)

From Serial No.36102001 and after

Index	Code	Parts Name	Drawing No.	Type	Maker	Q'ty	Note
1	74563933	Locating Pin Guide A	6572986 E			1	
2	79568704	Hex Soc Cap Screw	P330250004	M12X25		4	
3	86610819	Spring Washer	P336050008	12		4	
4	86613931	Washer	P336000008	12(Regular Round)		4	
5	74382816	Locating Pin Guide	6572978 B			1	
6	79568702	Hex Soc Cap Screw	P330230008	M8X30		4	
7	74722137	Cylinder Guide B	6533802			1	
8	36326825	Hex Soc Cap Screw	P330230016	M8X70		2	
9	74382977	Locating Pin Collar	6533803 A			1	
10	74382979	Cylinder Guide A	6533807			2	
11	74415497	Cylinder	7832807 A	CDQ2B32D-W0501-30	SMC	1	
12	79316159	Hex Soc Cap Screw	P330210018	M5X65		4	
13	74389511	Stopper Pin Bushing	6578599 B			1	
14	74578845	Locating Pin Bracket	6597285 B			1	
15	79566121	Hex Soc Cap Screw	P330230007	M8X25		4	
16	74382976	Stopper	6533801			1	
17	74389510	Stopper Pin	6572979 B			1	
18	74569814	Plastic Hose	P230222101	U2-4-6X4(Red)-2M	NITTA MOORE	1	
19	71512277	Plastic Hose	P230222102	U2-4-6X4(Blue)-2M	NITTA MOORE	1	

Unit No. 26

Brush Table(6)

From Serial No.36102001 and after

Index	Code	Parts Name	Drawing No.	Type	Maker	Q'ty	Note
20	74415496	Cable CR-6 (PE)	6827405			1	(Ground)
21	79574601	Hex Soc Cap Screw	P330200015	M4X10		1	(Ground)

Brush Table(7) <Locate Pin Cover>

From Serial No.36102001 and after

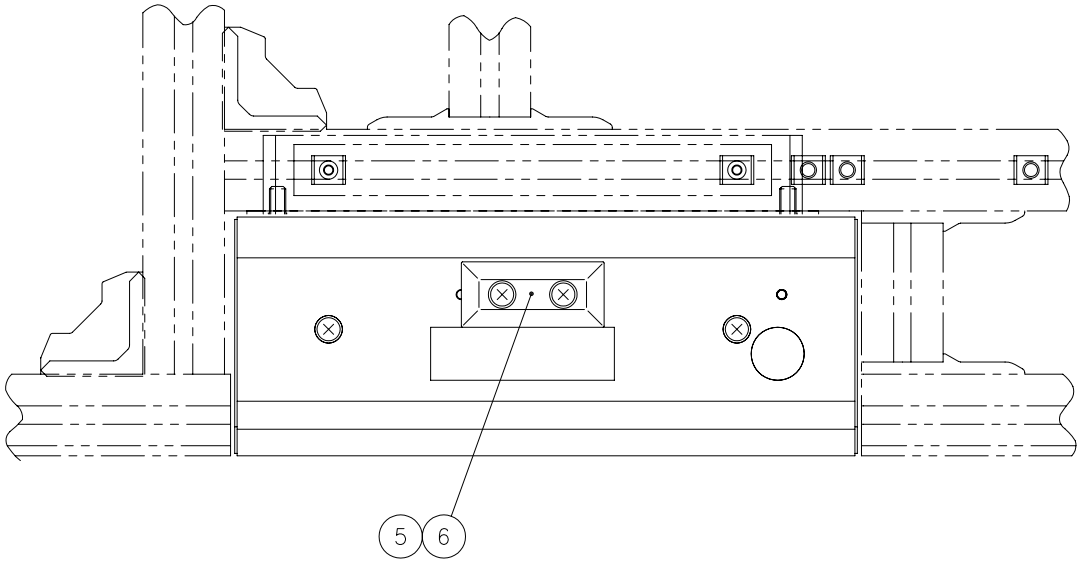

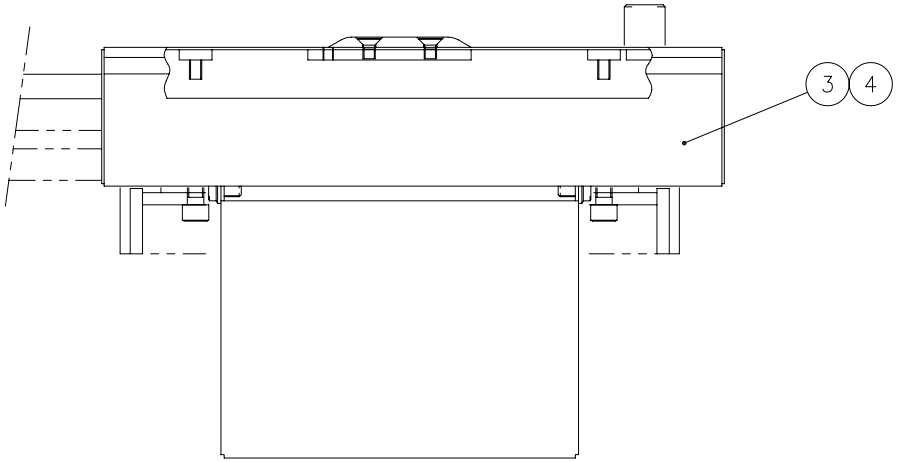

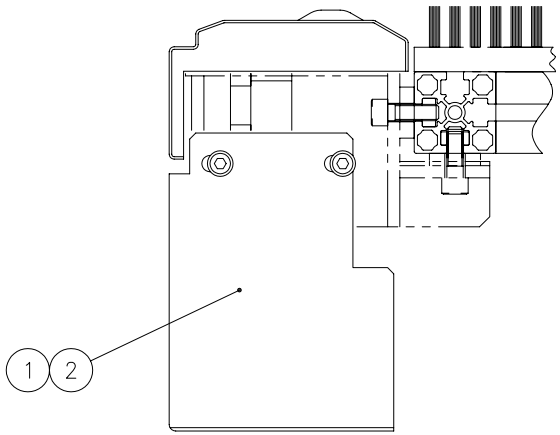

6827319
(6823658)

Unit No. 27

Brush Table(7)

From Serial No.36102001 and after

Index	Code	Parts Name	Drawing No.	Type	Maker	Q'ty	Note
1	74575629	Side Cover	6813196 A			1	
2	75428708	Flange Socket Bolt	P330468015	M6X10	NISSAN NEJI	4	
3	74571329	Locating Pin Cover (A)	6823659			1	
4	31183551	Flat Head Bolt	P334520001	M6X15		2	
5	74305715	Support Plate	0819402 A			1	
6	74355104	Flat Head Bolt	P334520014	M6X20		2	

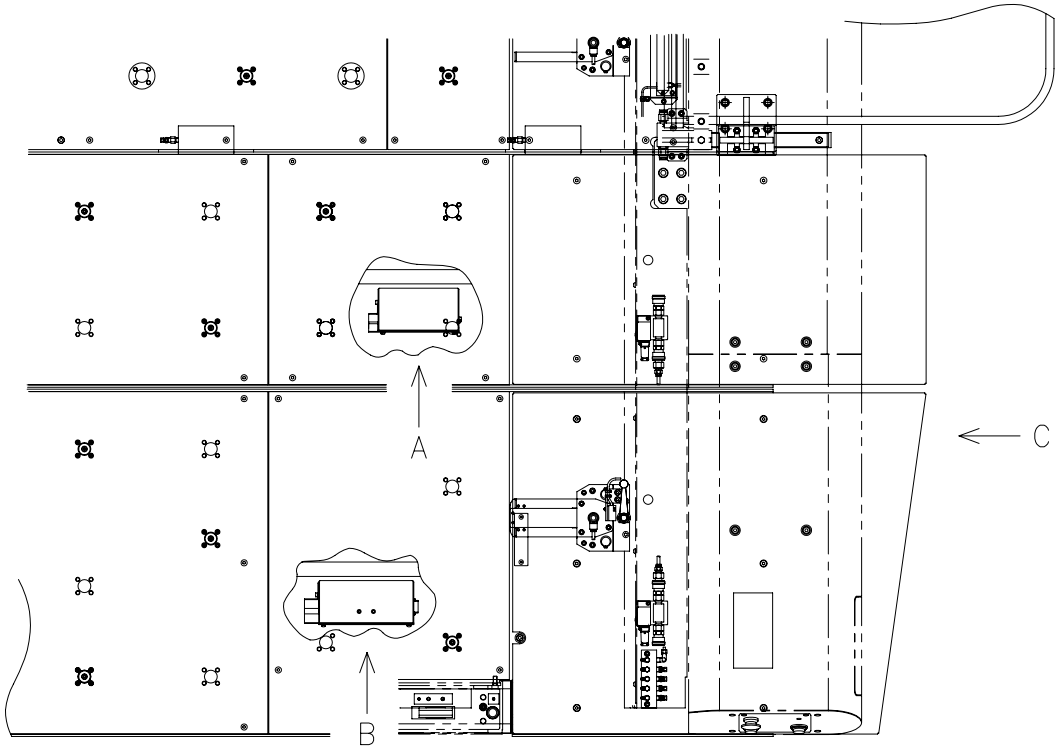

Front Side

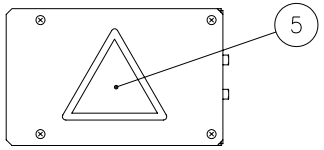

<FC Relay Box>
VIEW A

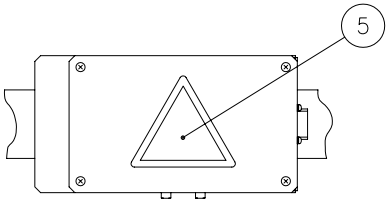

<F Relay Box>
VIEW B

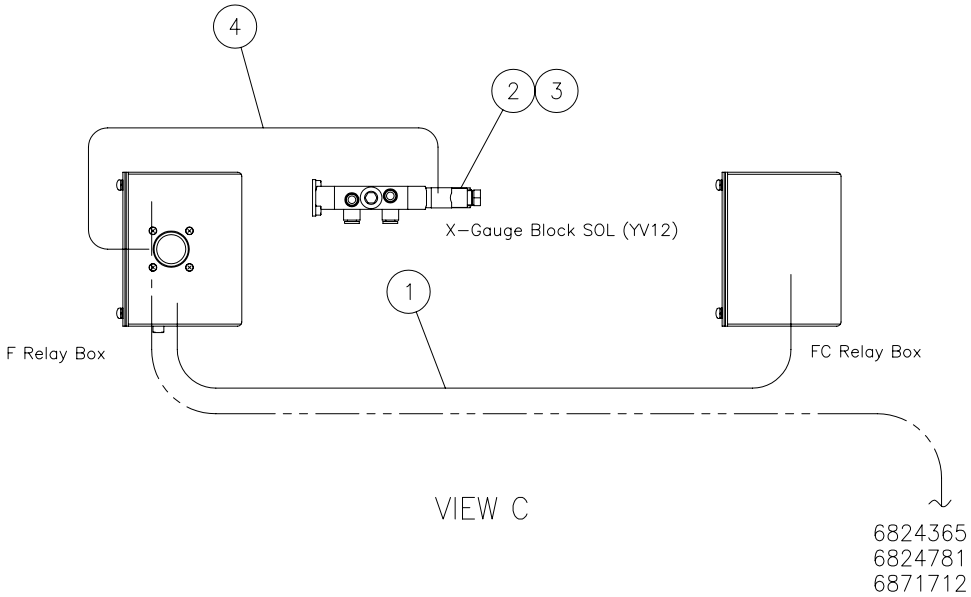

VIEW C

Unit No. 28

Brush Table(8)

From Serial No.36102001 and after

Index	Code	Parts Name	Drawing No.	Type	Maker	Q'ty	Note
1	74415554	Cable CH-1	6828051 B			1	
2	74569880	Solenoid Valve	7832809		SMC	1	
3	79572401	Hex Soc Cap Screw	P330200014	M4X8		2	
4	74575280	Cable Y-12 (1)	6827575			1	
5	74379098	Charging Mark	P360200003	JISB6015-80H		2	

Brush Table(9)-1/2 <Center Table>

From Serial No.36102001 and after

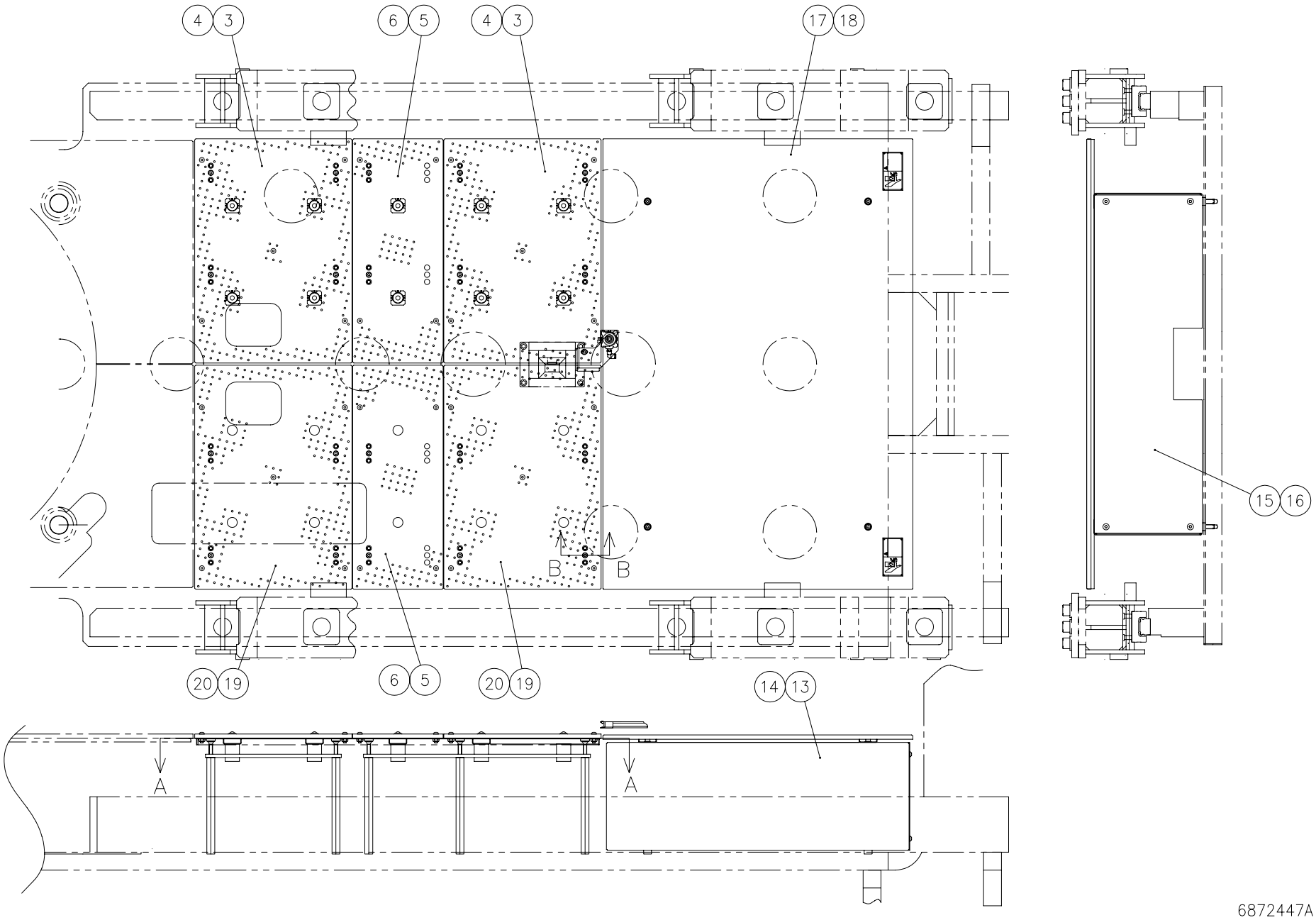

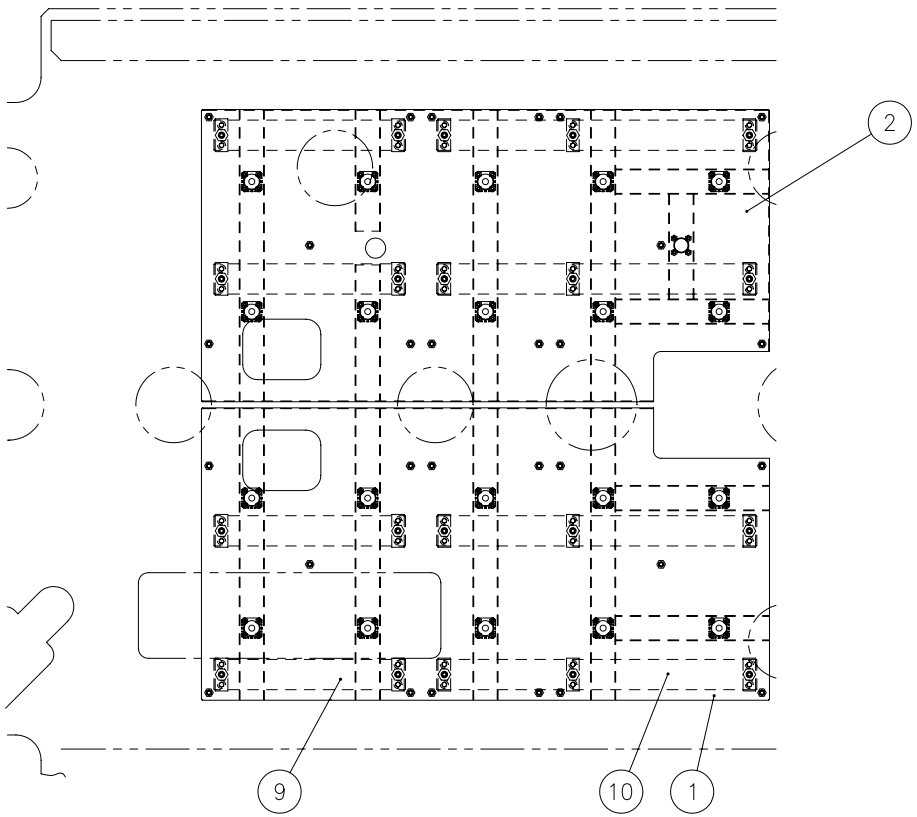

SECTION A–A

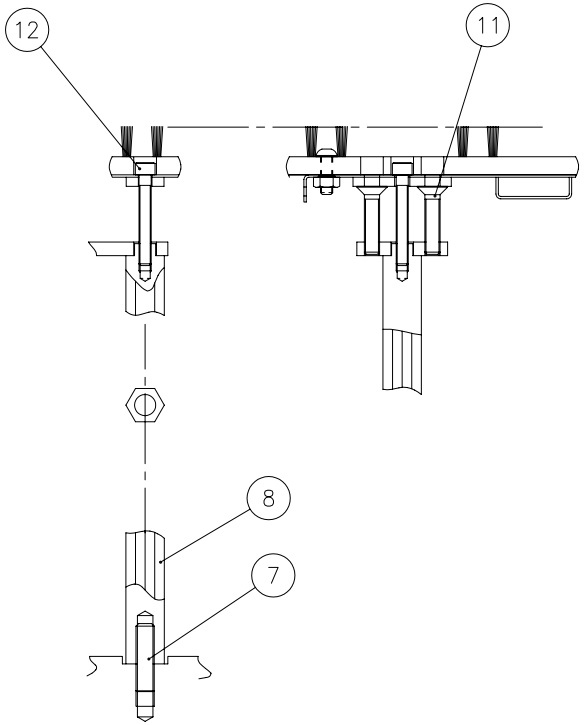

SECTION B–B

6872447A

Brush Table(9)

From Serial No.36102001 and after

Index	Code	Parts Name	Drawing No.	Type	Maker	Q'ty	Note
1	74419174	Center Brush Base (F)	6872501			1	
2	74419175	Center Brush Base (R)	6872502			1	
3	74417278	MDF Brush (C)	6873276 A			2	3.2mm
3	74419176	MDF Brush (C)	6878316			2	4.5mm
4	74722756	Button Head Screw	P334500021	M8X25		10	
5	74419119	MDF Brush (C6)	6872503			2	3.2mm
5	74419177	MDF Brush (C6)	6878317			2	4.5mm
6	74722756	Button Head Screw	P334500021	M8X25		8	
7	74386882	Socket Set Screw	P330550118	M12X45(Flat-end)		20	
8	74417370	Stud (C Table Base)	6873272	H22		20	
9	74419120	Center Table Base (T)	6872504			4	
10	74419121	Center Table Base (C)	6872505			4	
11	74732198	Flat Head Bolt	P334520050	M10X45		40	
12	36335242	Hex Soc Cap Screw	P330230014	M8X60		20	
13	74570691	Cover Table (B)	6822467			2	
14	74731349	Flange Socket Bolt	P330460004	M12X35		4	
15	74570692	Cover Table (C)	6813269 A			1	
16	10569021	Button Head Screw	P334500019	M8X15		4	
17	74570690	Cover Table (A)	6822466			1	

Unit No. 29

Brush Table(9)

From Serial No.36102001 and after

Index	Code	Parts Name	Drawing No.	Type	Maker	Q'ty	Note
18	75420815	Flange Socket Bolt	P330468001	M8X20	NISSAN NEJI	4	
19	74417278	MDF Brush (C)	6873276 A			2	
20	74722756	Button Head Screw	P334500021	M8X25		10	

Brush Table(10)-1/2 <Repositioning Table>

From Serial No.36102001 and after

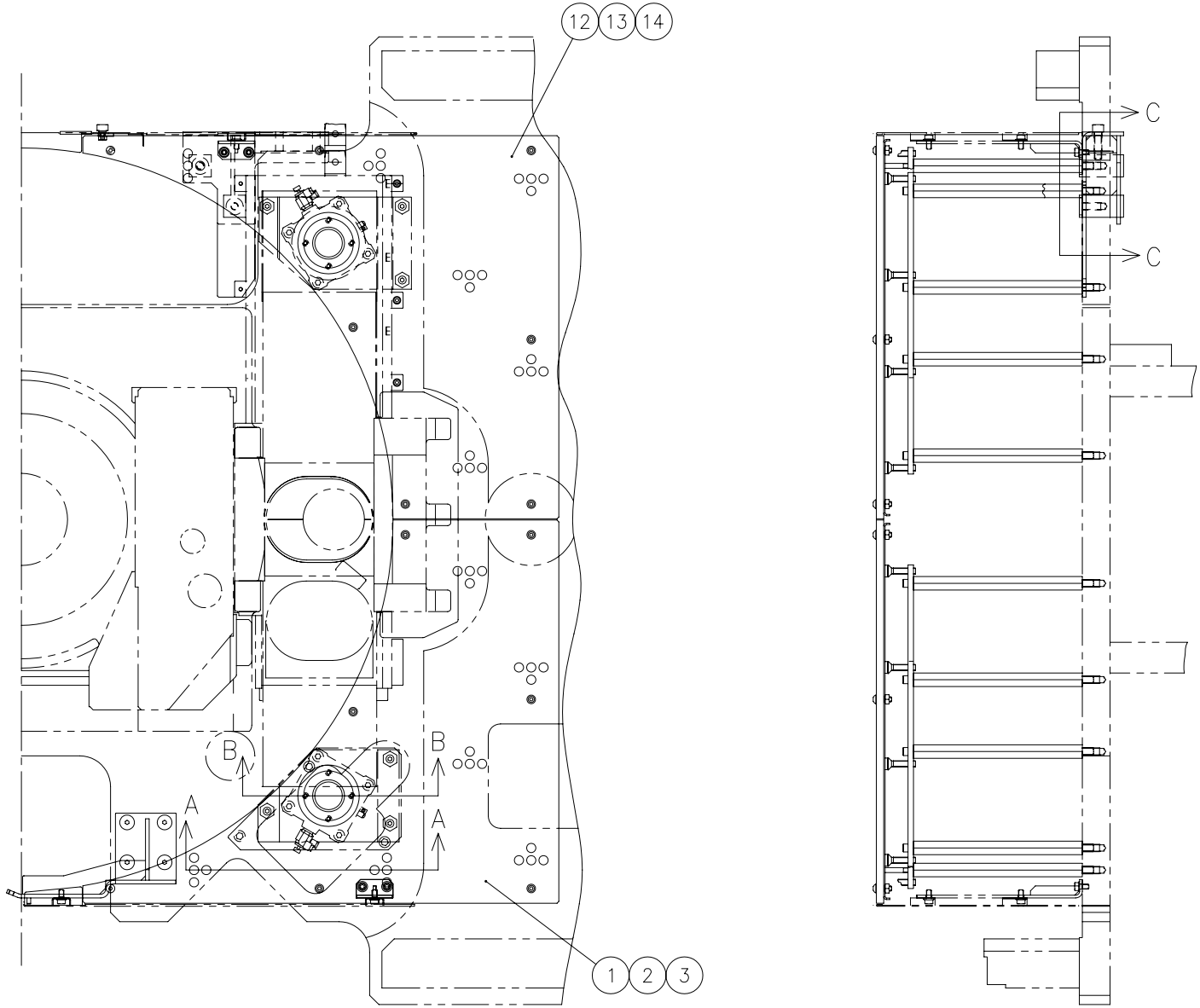

6872499
6873695
6873696
6873705
(6872447A)

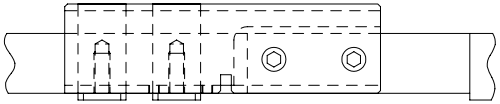

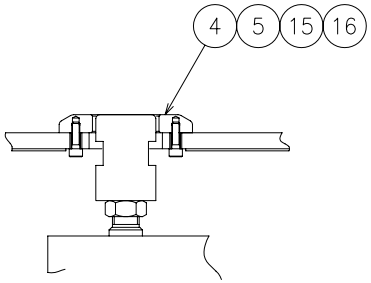

SECTION B–B

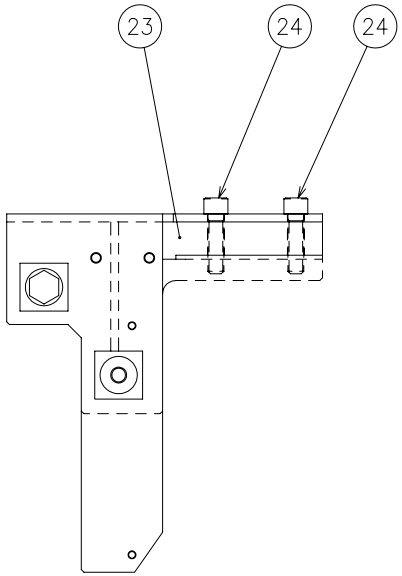

SECTION C–C

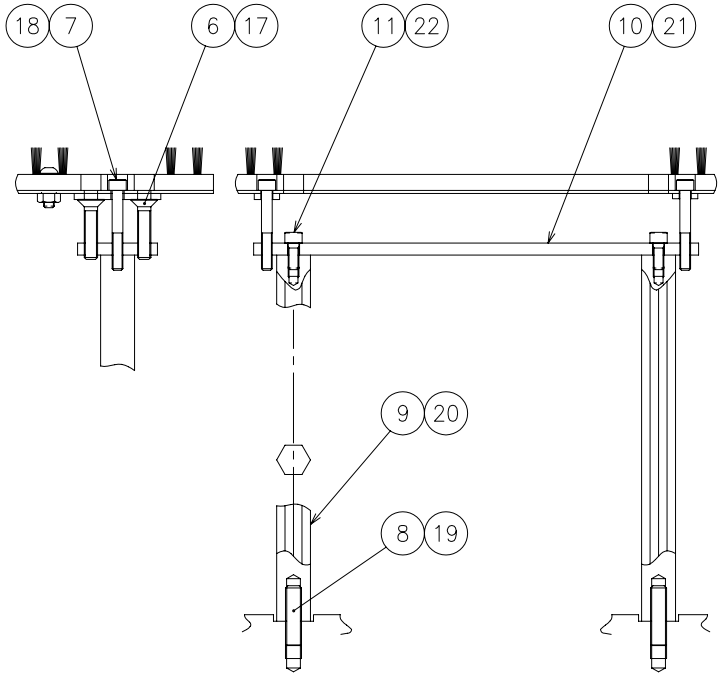

SECTION A–A

6872499
6873695
6873696
6873705
(6872447A)

Brush Table(10) From Serial No.36102001 and after

Index	Code	Parts Name	Drawing No.	Type	Maker	Q'ty	Note
1	74419151	Repositioning Brush Base (F)	6872228 A			1	
2	74419122	MDF Brush (Repositioning F)	6872225			1	
3	74722756	Button Head Screw	P334500021	M8X25		7	
4	74379286	Support Ring	6573538			1	
5	79567722	Hex Soc Cap Screw	P330220009	M6X20		4	
6	74732198	Flat Head Bolt	P334520050	M10X45		12	
7	36335242	Hex Soc Cap Screw	P330230014	M8X60		6	
8	74386882	Socket Set Screw	P330550118	M12X45(Flat-end)		2	
9	74417382	Stud (Table Base)	6873284			2	
10	74417383	Repositioning Table Base	6873277			1	
11	79564804	Hex Soc Cap Screw	P330230006	M8X20		2	
12	74419163	Repositioning Brush Base (R)	6872232 A			1	
13	74419123	MDF Brush (Repositioning R)	6872229			1	
14	74722756	Button Head Screw	P334500021	M8X25		7	
15	74379286	Support Ring	6573538			1	
16	79567722	Hex Soc Cap Screw	P330220009	M6X20		4	
17	74732198	Flat Head Bolt	P334520050	M10X45		12	
18	36335242	Hex Soc Cap Screw	P330230014	M8X60		6	
19	74386882	Socket Set Screw	P330550118	M12X45(Flat-end)		2	

Unit No. 30

Brush Table(10) From Serial No.36102001 and after

Index	Code	Parts Name	Drawing No.	Type	Maker	Q'ty	Note
20	74417382	Stud (Table Base)	6873284			2	
21	74417383	Repositioning Table Base	6873277			1	
22	79564804	Hex Soc Cap Screw	P330230006	M8X20		2	
23	74418392	Bracket (C)	6829526 A			1	
24	36618105	Hex Soc Cap Screw	P330250008	M12X45		2	

Brush Table(11)-1/2 <Main Machine Rear Table>

From Serial No.36102001 and after

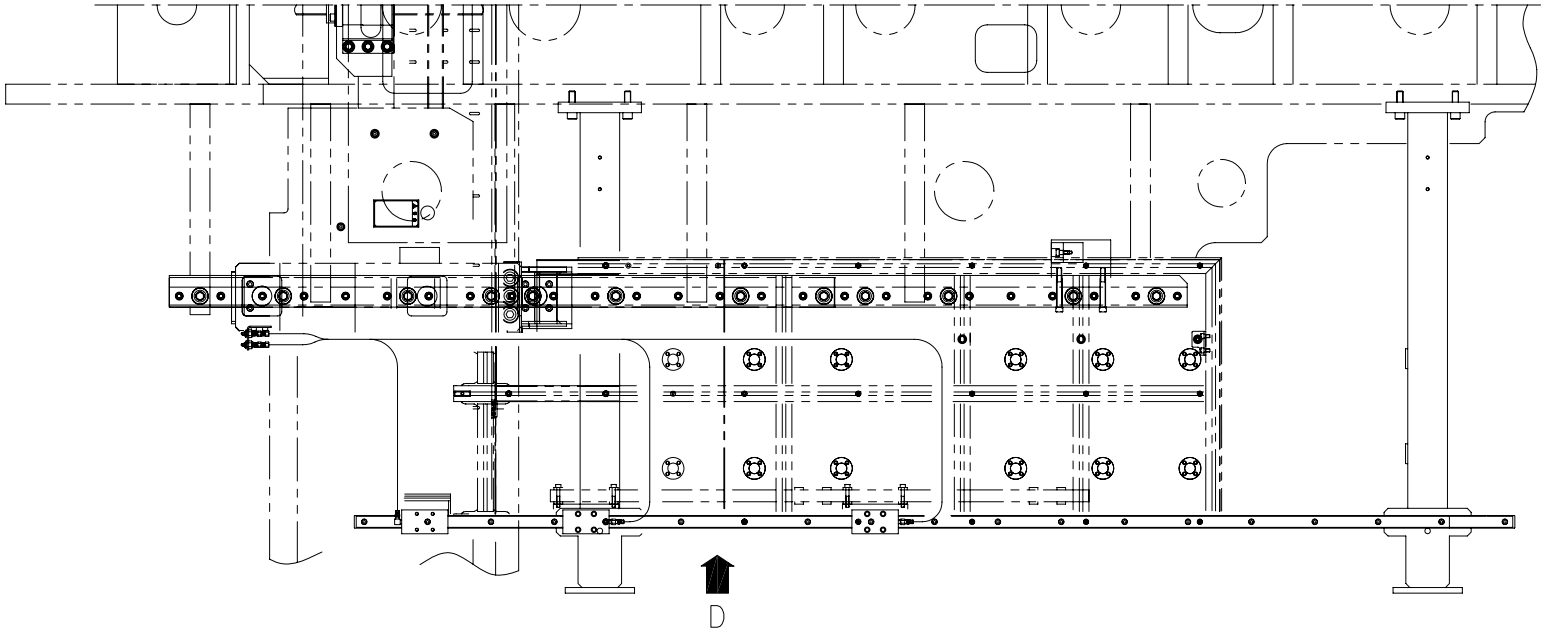

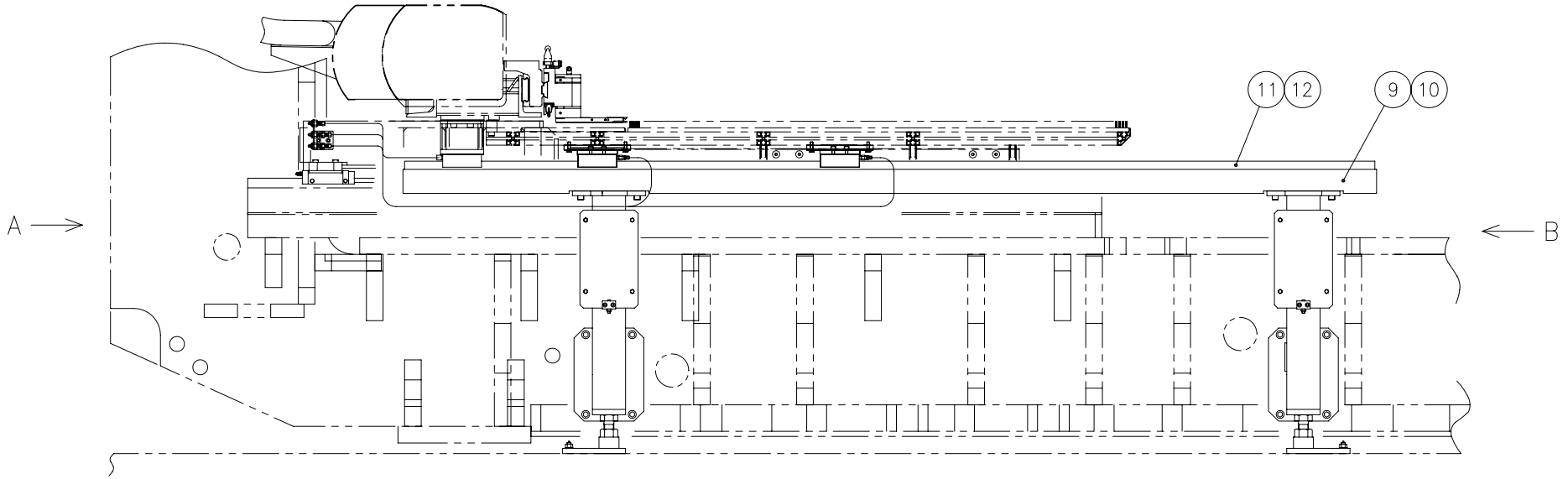

6872451

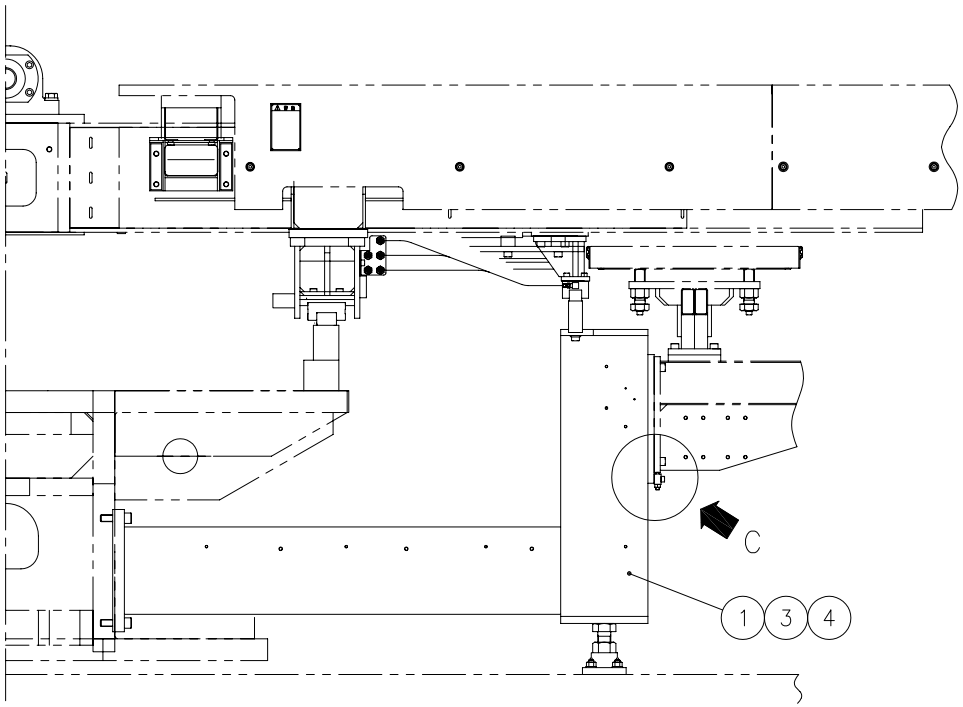

VIEW A

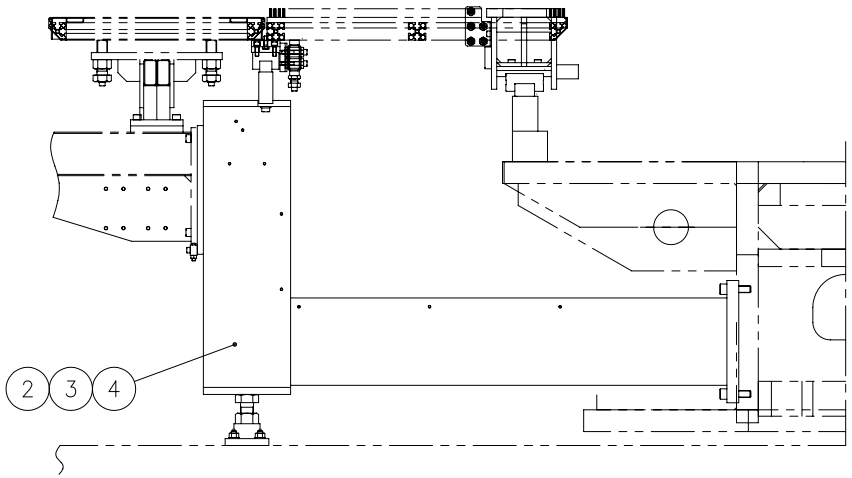

VIEW B

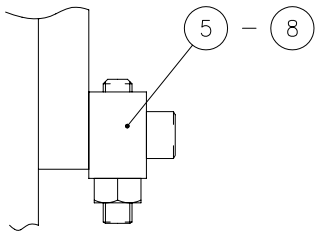

DETAIL C

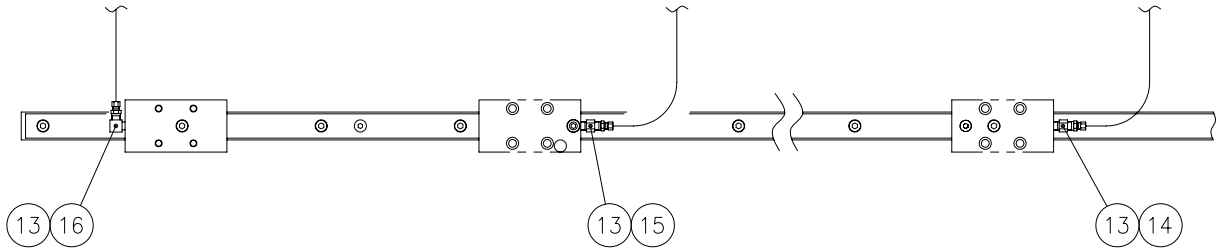

DETAIL D

6872451

Unit No. 31

Brush Table(11) From Serial No.36102001 and after

Index	Code	Parts Name	Drawing No.	Type	Maker	Q'ty	Note
1	74418370	Sub Guide Arm (R)	6872438			1	
2	74418372	Sub Guide Arm (L)	6872439			1	
3	74377038	Hex Soc Cap Screw	P330260035	M16X55		8	
4	74388357	Spring Pin	P337030132	13X40		2	
5	74415463	Adjusting Block	6871143			2	
6	79568702	Hex Soc Cap Screw	P330230008	M8X30		4	
7	74415442	Socket Set Screw	P330570030	M8X40(Dog-end)		2	
8	74300504	Nut	P332000005	M8		2	
9	74418374	LM Guide Rail	6872435			1	
10	36110743	Hex Soc Cap Screw	P330250006	M12X35		4	
11	74418393	LM Guide	7830939	TS302920ANP3-01KLS	NSK	1	
12	79568702	Hex Soc Cap Screw	P330230008	M8X30		19	
13	74722932	Bite Type Pipe Fitting	P585536004	MH-1061	AOI	3	
14	31182979	Plastic Hose	P230224085	AX-1206(White)-2.5M	AOI	1	
15	31182979	Plastic Hose	P230224057	AX-1206(White)-1.5M	AOI	1	
16	31182979	Plastic Hose	P230224087	AX-1206(White)-0.8M	AOI	1	

Brush Table(12)-1/7 <Rear Fix Table>

From Serial No.36102001 and after

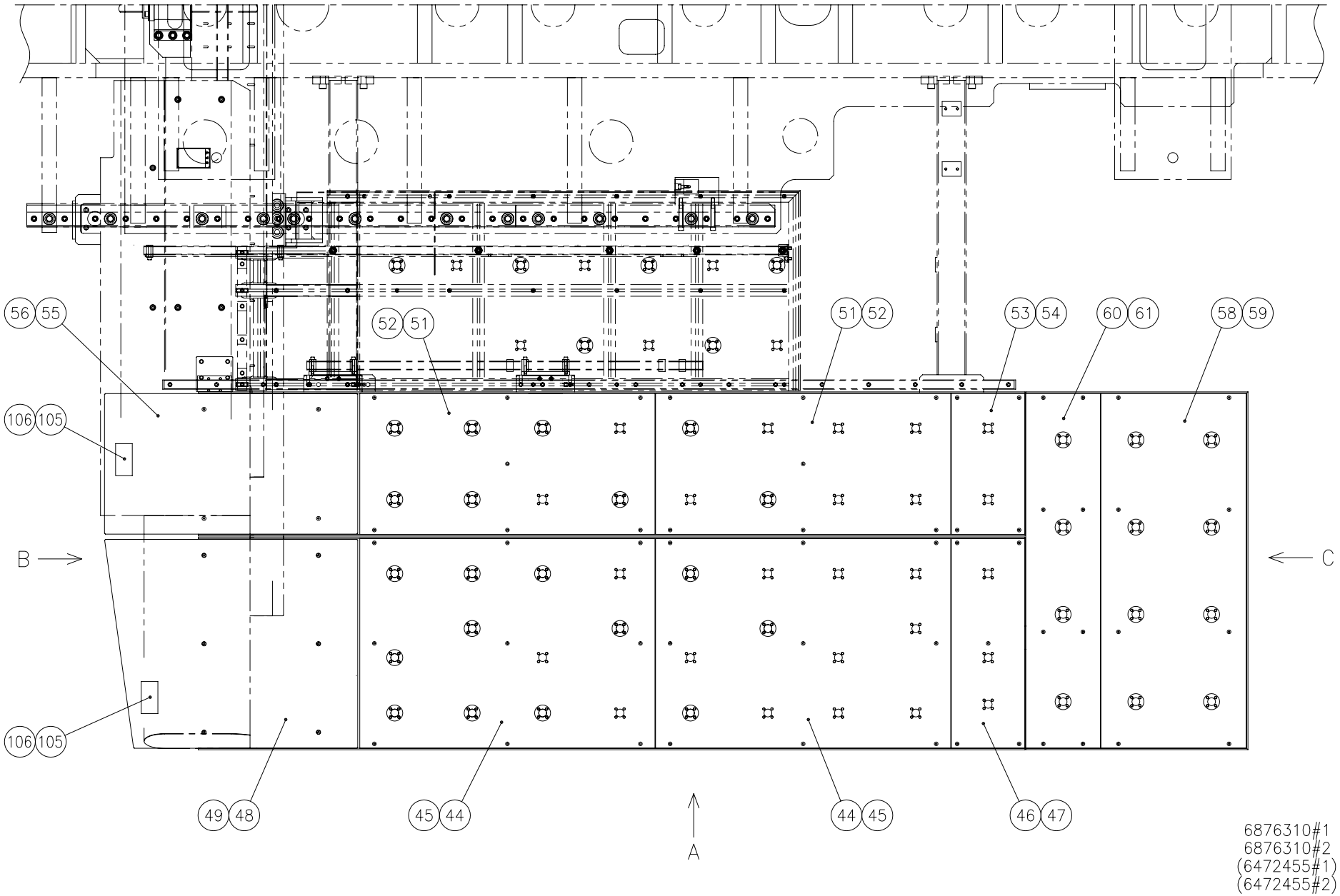

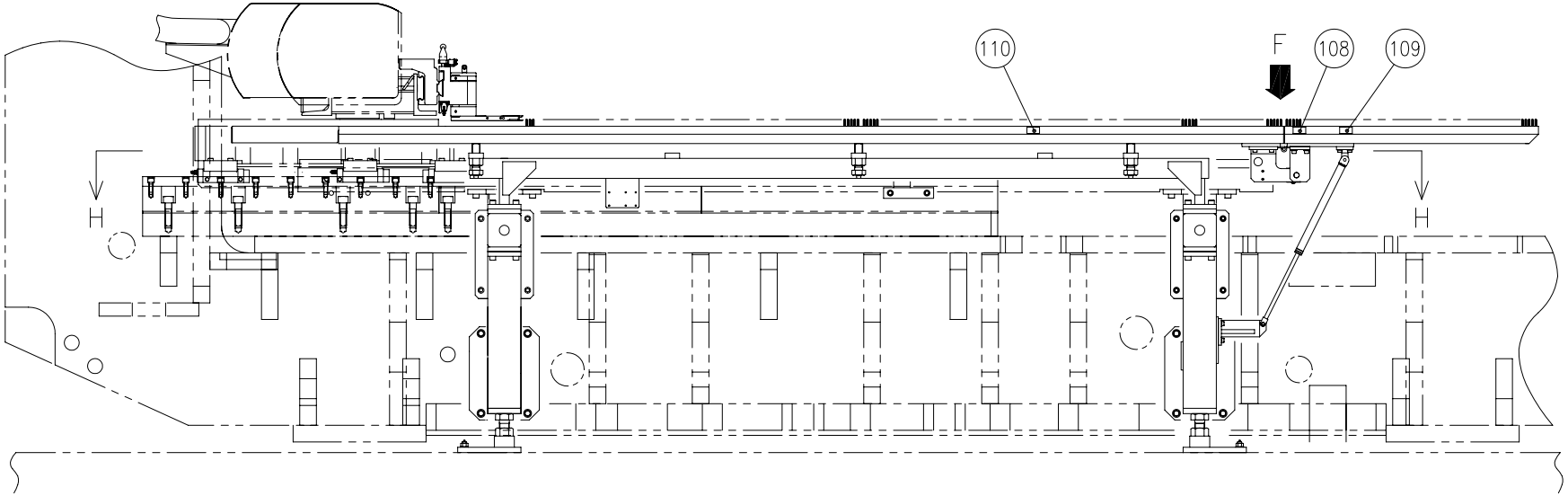

VIEW A

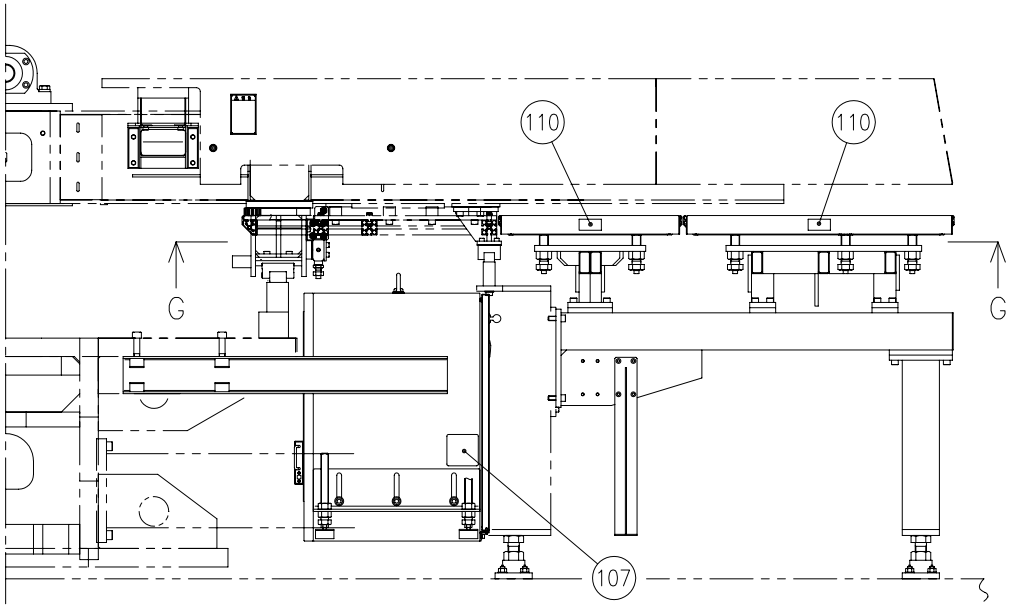

VIEW B

6876310#1
6876310#2
(6472455#1)
(6472455#2)

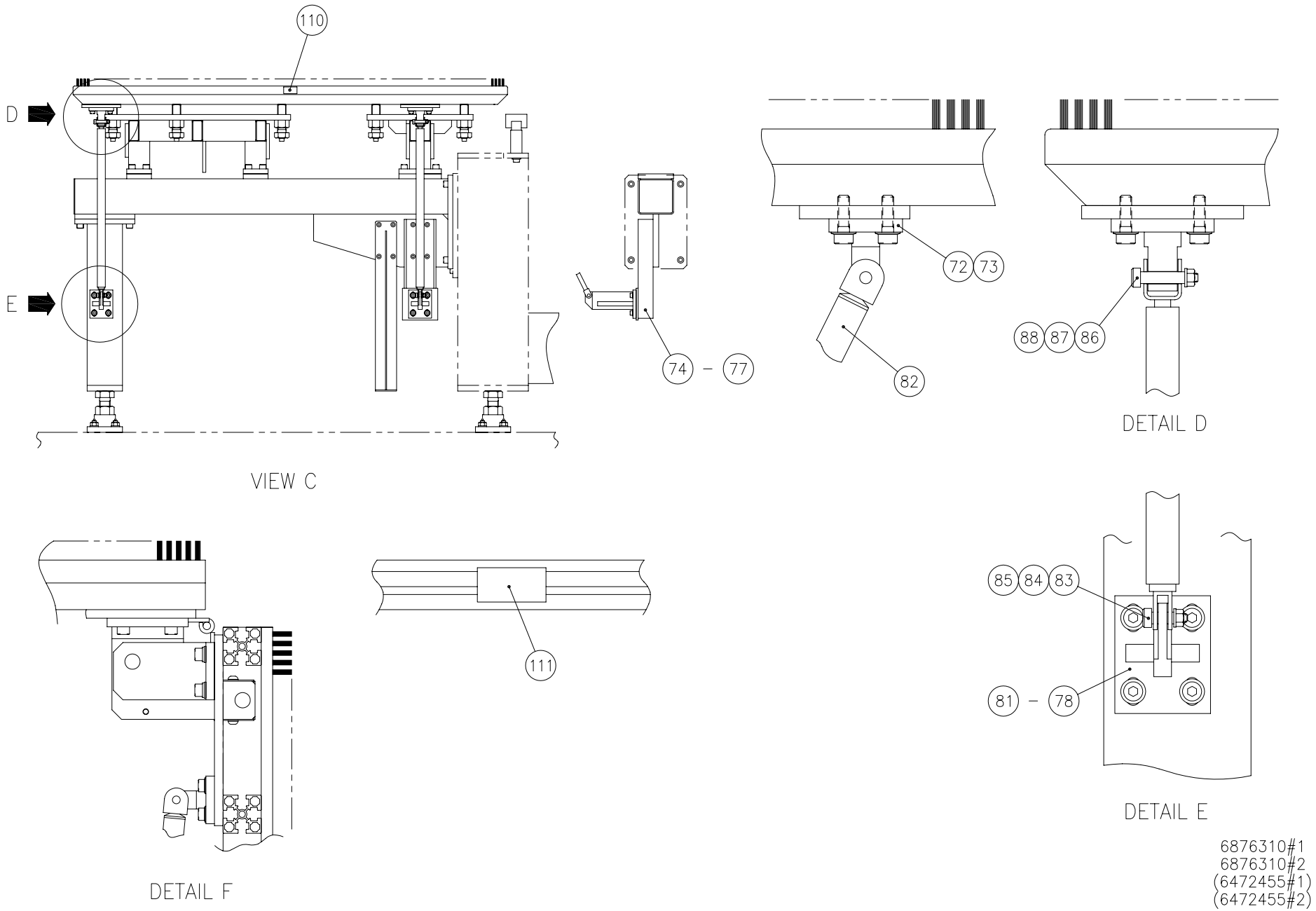
110
D
E
VIEW C
74 – 77
72 73
82
88 87 86
DETAIL D
111
DETAIL F
85 84 83
81 – 78
DETAIL E
6876310#1
6876310#2
(6472455#1)
(6472455#2)

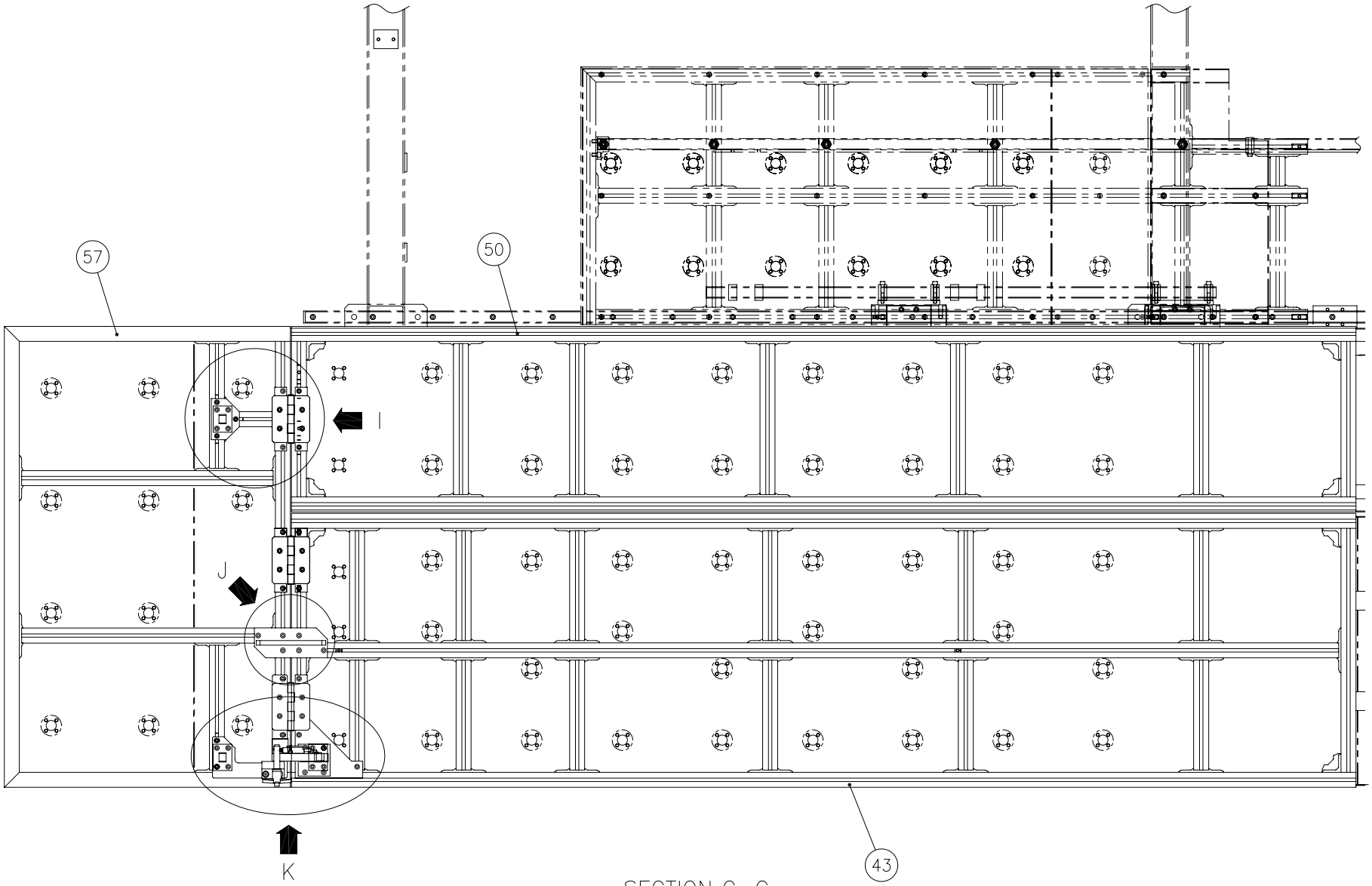

6876310#1
6876310#2
(6472455#1)
(6472455#2)

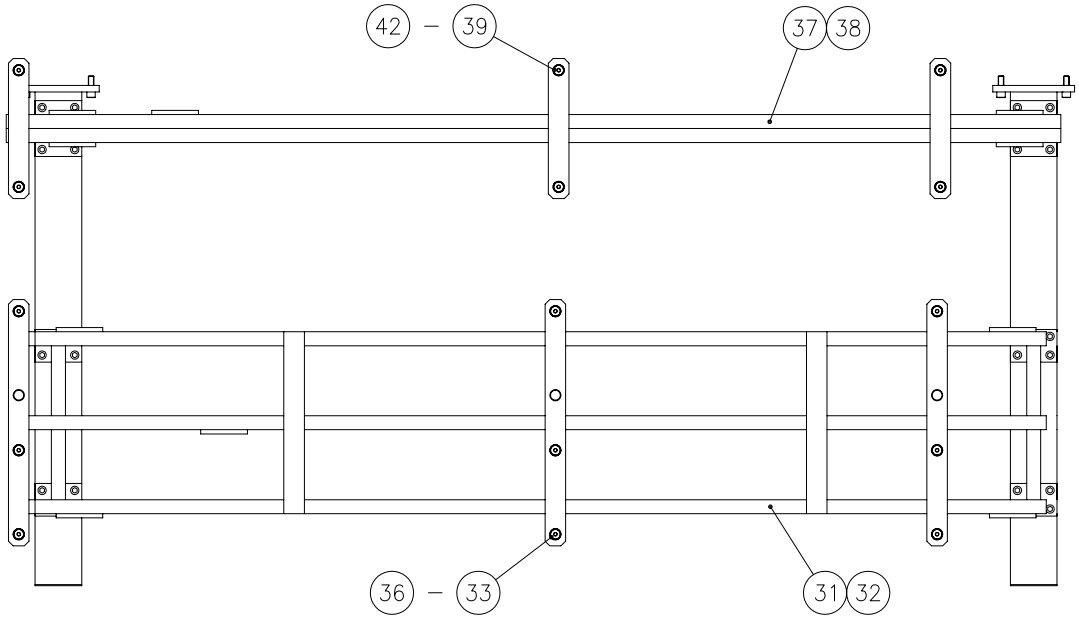

SECTION H–H

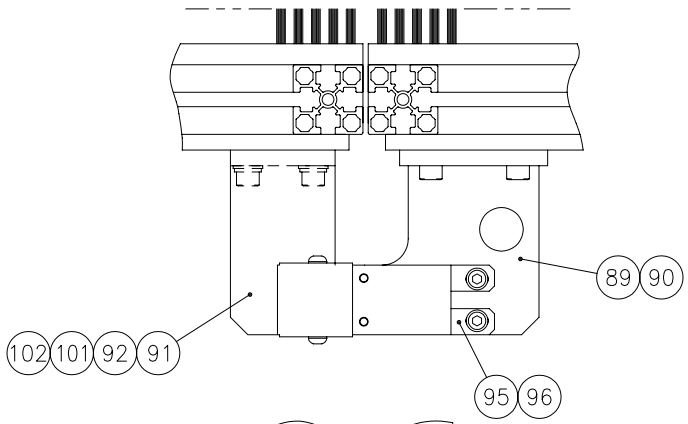

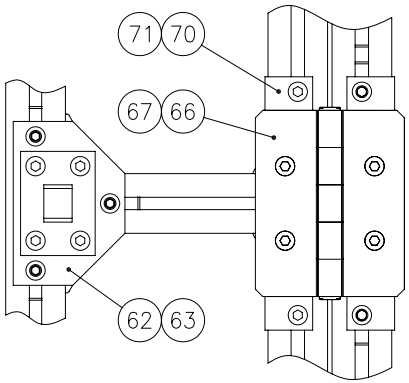

DETAIL I

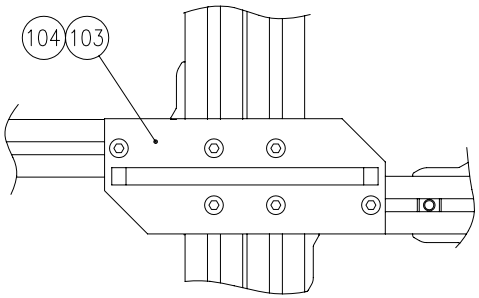

DETAIL J

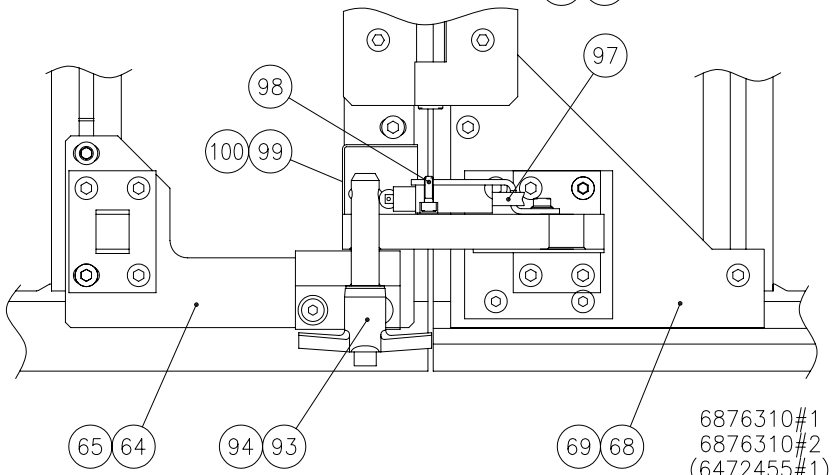

6876310#1
6876310#2
(6472455#1)
(6472455#2)

DETAIL K

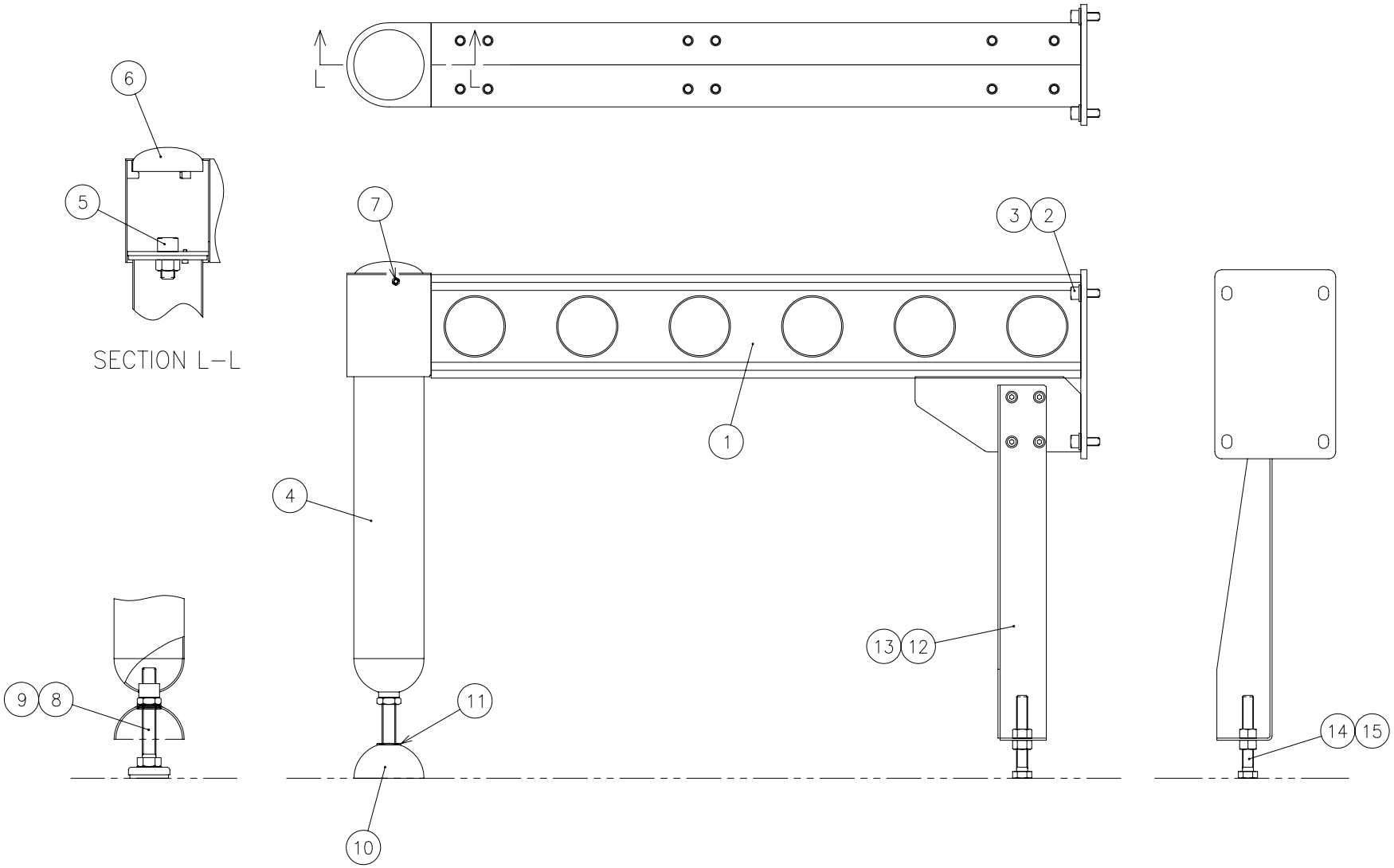

6879685

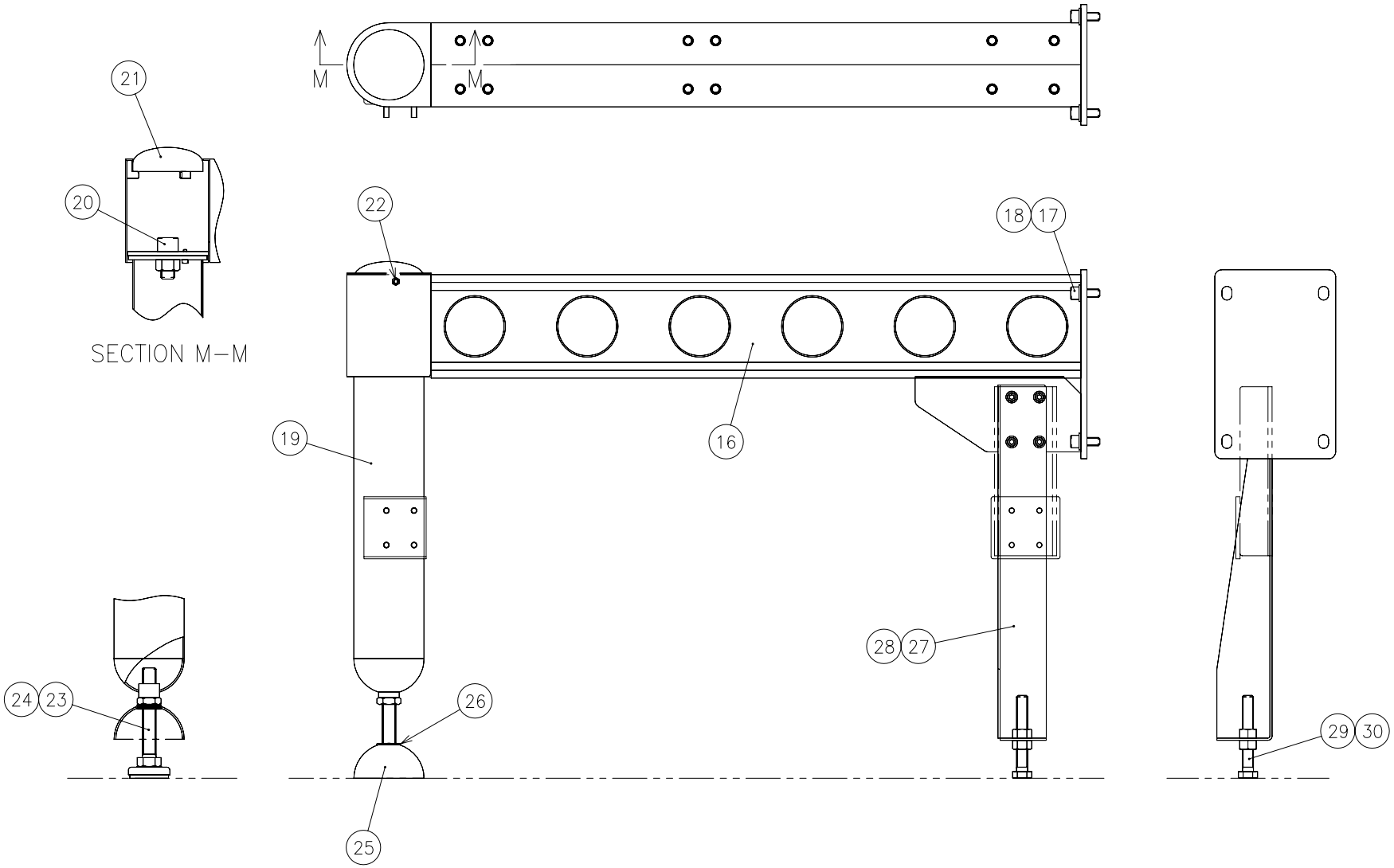

6879662

Brush Table(12) From Serial No.36102001 and after

Index	Code	Parts Name	Drawing No.	Type	Maker	Q'ty	Note
1	74419472	Side Table Base (R)	380787100A			1	
2	36367655	Hex Soc Cap Screw	P330250005	M12X30		4	
3	86613931	Washer	P336000008	12(Regular Round)		4	
4	74419473	Stand	6879686			1	
5	36320521	Hex Soc Cap Screw	P330270003	M20X40		1	
6	74419474	Cap	6879678			1	
7	86620204	Socket Set Screw	P330590019	M6X10(Cup-end)		1	
8	74570064	Level Adjuster	P384022021	KC-280-0	TAKIGEN	1	
9	10380040	Nut	P332000023	M20(Thin)		1	
10	74419475	Level Adjuster Cover	3807879			1	
11	31100028	Bush For Cable	P229112053	C-30-NG-79-Q	TAKIGEN	1	
12	74419476	Shipping Bracket	3807874 A			1	
13	75420815	Flange Socket Bolt	P330468001	M8X20	NISSAN NEJI	4	
14	36163072	Bolt	P330060076	M16X120(All-thread)		1	
15	86611630	Nut	P332000066	M16(Type-1)		1	
16	74419472	Side Table Base (R)	380787100A			1	
17	36367655	Hex Soc Cap Screw	P330250005	M12X30		4	
18	86613931	Washer	P336000008	12(Regular Round)		4	
19	74419484	Stand (RT)	6879680			1	

Brush Table(12) From Serial No.36102001 and after

Index	Code	Parts Name	Drawing No.	Type	Maker	Q'ty	Note
20	36320521	Hex Soc Cap Screw	P330270003	M20X40		1	
21	74419474	Cap	6879678			1	
22	86620204	Socket Set Screw	P330590019	M6X10(Cup-end)		1	
23	74570064	Level Adjuster	P384022021	KC-280-0	TAKIGEN	1	
24	10380040	Nut	P332000023	M20(Thin)		1	
25	74419475	Level Adjuster Cover	3807879			1	
26	31100028	Bush For Cable	P229112053	C-30-NG-79-Q	TAKIGEN	1	
27	74419476	Shipping Bracket	3807874 A			1	
28	75420815	Flange Socket Bolt	P330468001	M8X20	NISSAN NEJI	4	
29	36163072	Bolt	P330060076	M16X120(All-thread)		1	
30	86611630	Nut	P332000066	M16(Type-1)		1	
31	74418401	Side Table Frame (1)	6872490			1	
32	36110743	Hex Soc Cap Screw	P330250006	M12X35		16	
33	74569742	Jack Screw	6821834			9	
34	71371592	Nut	P332000011	M24		9	
35	79316161	Hex Soc Cap Screw	P330230024	M8X110		9	
36	79567109	Washer	P336000006	8(Regular Round)		9	
37	74418402	Side Table Frame (2)	6872491			1	
38	36110743	Hex Soc Cap Screw	P330250006	M12X35		8	

Brush Table(12) From Serial No.36102001 and after

Index	Code	Parts Name	Drawing No.	Type	Maker	Q'ty	Note
39	74569742	Jack Screw	6821834			6	
40	71371592	Nut	P332000011	M24		6	
41	79316161	Hex Soc Cap Screw	P330230024	M8X110		6	
42	79567109	Washer	P336000006	8(Regular Round)		6	
43	74419485	Fixed Table (R) A	7830943 B		NIC	1	
44	74571312	MDF Brush (K-4)	6823663 A			2	
45	74722756	Button Head Screw	P334500021	M8X25		18	
46	74418404	MDF Brush (K-9)	6872492			1	
47	74722756	Button Head Screw	P334500021	M8X25		5	
48	74415470	Cover Table (R-1)	6823014 A			1	
49	79565423	Hex Soc Cap Screw	P330230004	M8X15		6	
50	74418405	Fixed Table (R) B	7830944		NIC	1	
51	74415176	MDF Brush (K-1)	6823635			2	3.2mm
51	74575212	MDF Brush (K-1)	6823846			2	4.5mm
52	74722756	Button Head Screw	P334500021	M8X25		14	
53	74418406	MDF Brush (K-10)	6872493			1	3.2mm
53	74418407	MDF Brush (K-10)	6878329			1	4.5mm
54	74722756	Button Head Screw	P334500021	M8X25		4	
55	74415449	Cover Table (F-2)	6823844 A			1	

Brush Table(12) From Serial No.36102001 and after

Index	Code	Parts Name	Drawing No.	Type	Maker	Q'ty	Note
56	79565423	Hex Soc Cap Screw	P330230004	M8X15		4	
57	74418408	Open And Shut Table	7830946		NIC	1	
58	74571313	MDF Brush (K-7)	6823664 A			1	
59	74722756	Button Head Screw	P334500021	M8X25		8	
60	74418409	MDF Brush (K-11)	6872494 A			1	
61	74722756	Button Head Screw	P334500021	M8X25		8	
62	74569784	Gas Spring Plate	6821854			1	
63	79564804	Hex Soc Cap Screw	P330230006	M8X20		3	
64	74571320	Hinge Plate (1)	6823674 A			1	
65	79564804	Hex Soc Cap Screw	P330230006	M8X20		3	
66	74383136	Hinge Add.Works	6579383	B-1001-2		3	
67	86612728	Hex Soc Cap Screw	P330230002	M8X12		12	
68	74569786	Hinge Plate (2)	6821856			1	
69	79564804	Hex Soc Cap Screw	P330230006	M8X20		3	
70	74569787	Hinge Plate (3)	6821857			4	
71	79564804	Hex Soc Cap Screw	P330230006	M8X20		8	
72	74575218	Gas Spring Bracket (2)	6822978 A			2	
73	75420636	Flange Socket Bolt	P330468003	M8X25	NISSAN NEJI	8	
74	74419486	Gas Spring Bracket (3)	6879679			1	

Brush Table(12) From Serial No.36102001 and after

Index	Code	Parts Name	Drawing No.	Type	Maker	Q'ty	Note
75	73114706	Flange Socket Bolt	P330468002	M8X30	NISSAN NEJI	4	
76	74300504	Nut	P332000005	M8		4	
77	79567109	Washer	P336000006	8(Regular Round)		4	
78	74575220	Gas Spring Bracket (1)	6823003			2	
79	75420636	Flange Socket Bolt	P330468003	M8X25	NISSAN NEJI	4	
80	74300504	Nut	P332000005	M8		4	
81	79567109	Washer	P336000006	8(Regular Round)		4	
82	74387138	Gas Spring	P317555029	50UX0	TAKACHIHO	2	
83	74560042	Shoulder Bolt	P338134013	MSB8-15	MISUMI	2	
84	79565419	Washer	P336000005	6(Regular Round)		2	
85	44274544	Nut	P332000004	M6		2	
86	74379250	Shoulder Bolt	P338134019	MSB8-30	MISUMI	2	
87	79565419	Washer	P336000005	6(Regular Round)		2	
88	44274544	Nut	P332000004	M6		2	
89	74415472	Pin Bracket	6870270			1	
90	79566121	Hex Soc Cap Screw	P330230007	M8X25		4	
91	74415473	Pin Bracket (2)	6822980 B			1	
92	79566121	Hex Soc Cap Screw	P330230007	M8X25		2	
93	74569793	Locating Pin	P337108002	BJ773-16050	IMAO Mfg	1	

Brush Table(12) From Serial No.36102001 and after

Index	Code	Parts Name	Drawing No.	Type	Maker	Q'ty	Note
94	79573416	Hex Soc Cap Screw	P330210003	M5X10		1	
95	74415474	LS Bracket	6822981 D			1	
96	45252001	Flange Socket Bolt	P330460003	M6X15		2	
97	74415962	Cable S-18 (1)	6820258 B			1	
98	79316109	Hex Soc Cap Screw	P330210006	M5X15		2	
99	74415475	LS Cover	6870271			1	
100	36379029	Button Head Screw	P334500013	M6X10		2	
101	79567109	Washer	P336000006	8(Regular Round)		2	
102	86610326	Spring Washer	P336050006	8		2	
103	74569796	Shipping Bracket	6821858			1	
104	79564804	Hex Soc Cap Screw	P330230006	M8X20		6	
105	71362136	Legend Plate (Warning)(3)	6045924			2	English
105	71362135	Legend Plate (Warning)(3) FRA	6045078			2	French
105	71362137	Legend Plate (Warning)(3) GER	6046718			2	German
105	71362138	Legend Plate (Warning)(3) ITA	6046728			2	Italian
105	74415924	Legend Plate (Warning)(3)	6816795			2	Chinese
106	74326603	Blind Rivet	P339208001	NTA3-2	LOBTEX	8	
107	74419480	Legend Plate (Caution) E	3809322	(DO NOT LIFT HERE)		2	English
107	74419481	Legend Plate (Caution) F	3809323			2	French

Brush Table(12) From Serial No.36102001 and after

Index	Code	Parts Name	Drawing No.	Type	Maker	Q'ty	Note
107	74419479	Legend Plate (Caution) G	3809321			2	German
107	74419482	Legend Plate (Caution) I	3809324			2	Italian
107	74419478	Legend Plate (Caution) C	3809319			2	Chinese
108	74415366	Legend Plate (OPEN) B (ENG)	6870230			1	English
108	74415368	Legend Plate (OPEN) B (FRA)	6870231			1	French
108	74415367	Legend Plate (OPEN) B (GER)	6870229			1	German
108	74415365	Legend Plate (OPEN) B (ITA)	6870232			1	Italian
108	74419487	Legend Plate (OPEN) B	6817542			1	Chinese
109	74415370	Legend Plate (Caution)ENG.	6870239			1	English
109	74415372	Legend Plate (Caution)FRA.	6870240			1	French
109	74415371	Legend Plate (Caution)GER.	6870238			1	German
109	74415369	Legend Plate (Caution)ITA.	6870241			1	Italian
109	74419488	Legend Plate (Caution)	6817524			1	Chinese
110	71130447	Legend Plate (Do Not Get On)	0840546			4	
111	74417425	Legend Plate (Warning)	6828694			2	
112	74419483	Adhesive Tape	P379108025	FE-6061 (20mm)	FANTAC	5	1M (List Only)

Brush Table(13)-1/3 <Rear Move Table>

From Serial No.36102001 and after

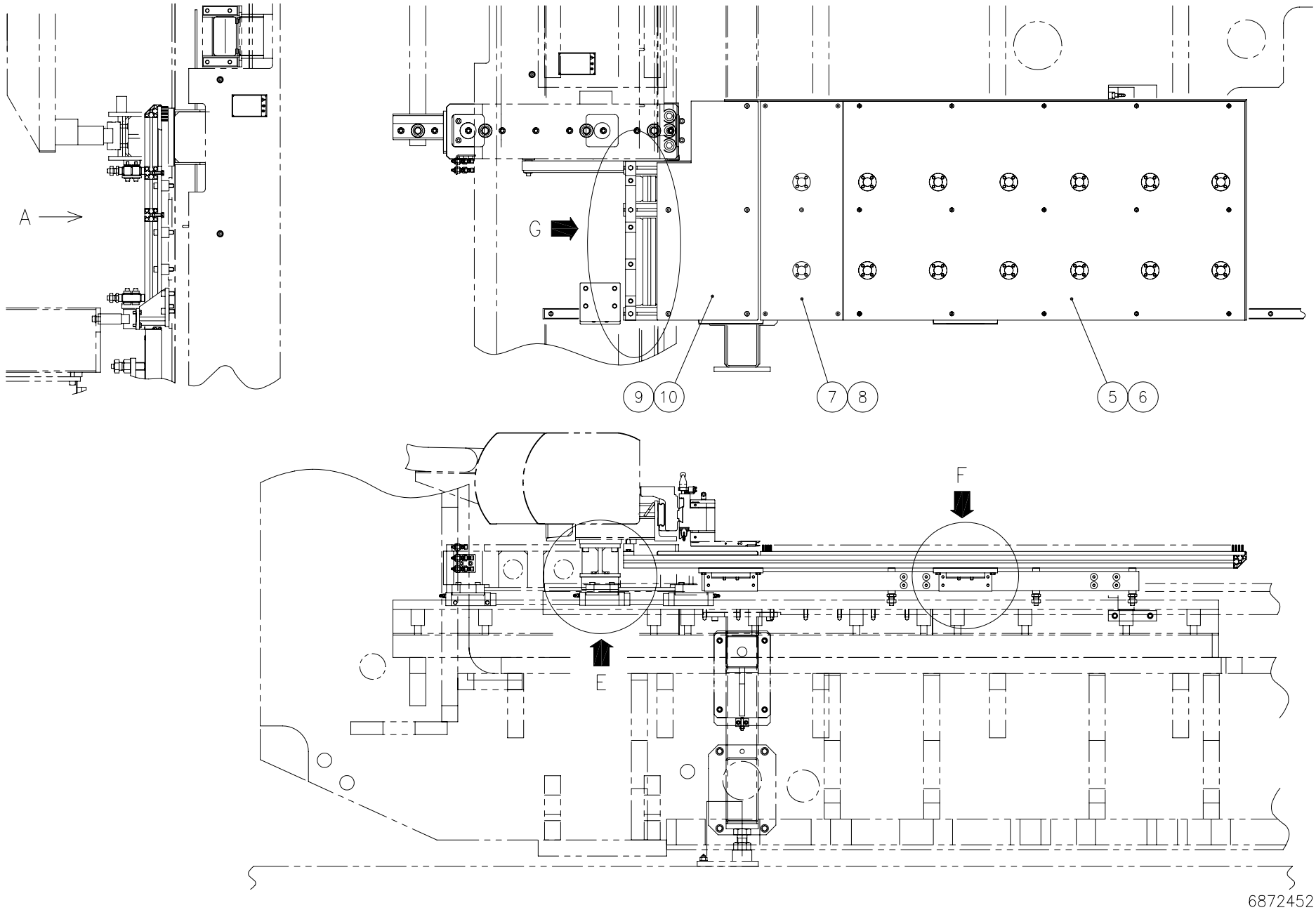

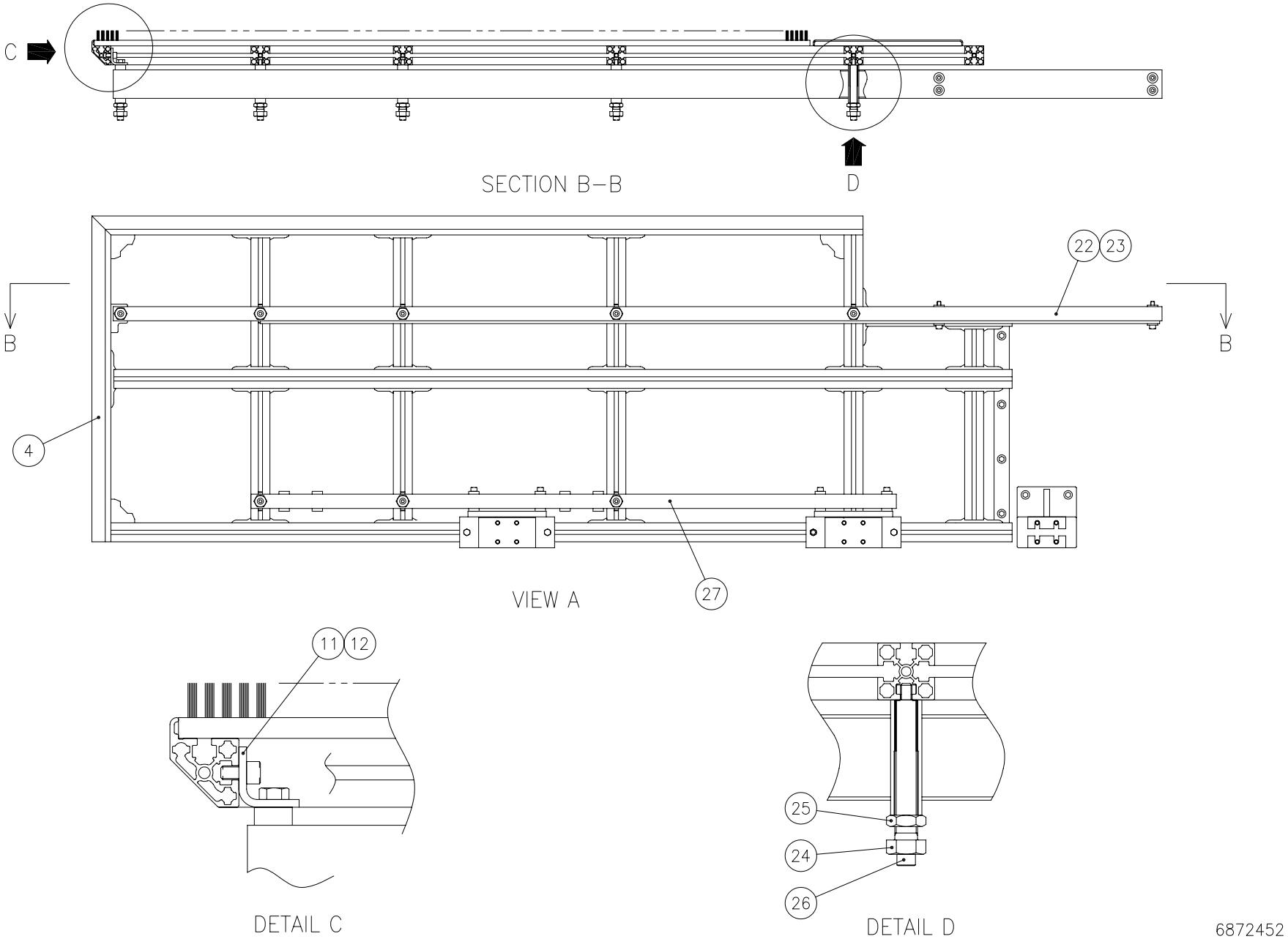
C
SECTION B–B
D
22
23
B
B
4
27
VIEW A
11
12
DETAIL C
25
24
26
DETAIL D
6872452

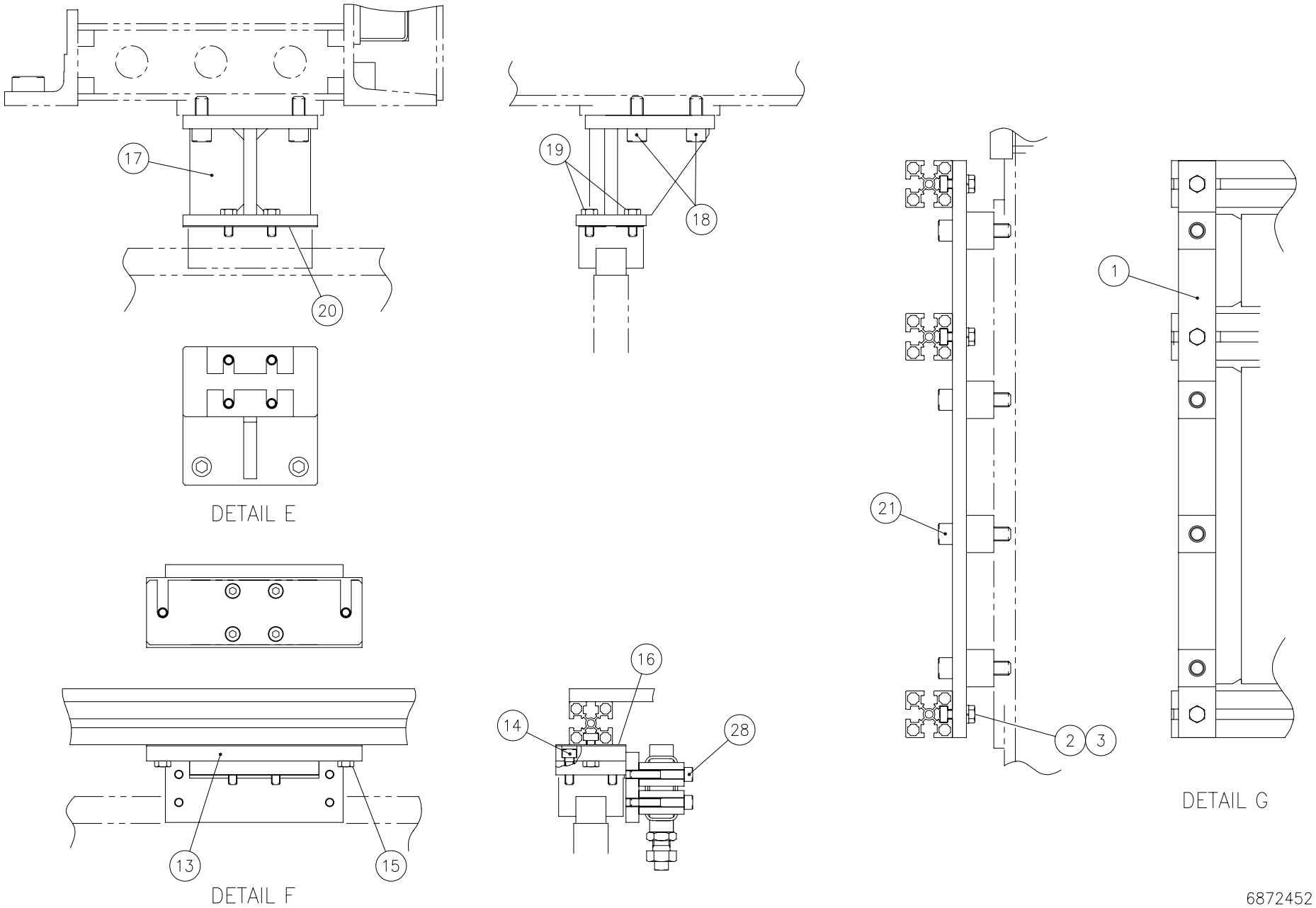
17
20
19
18
DETAIL E
21
1
2
3
DETAIL G
16
14
28
13
15
DETAIL F
6872452

Brush Table(13) From Serial No.36102001 and after

Index	Code	Parts Name	Drawing No.	Type	Maker	Q'ty	Note
1	74415465	Table Spacer	6828647			1	
2	74183005	Bolt	P330030007	M8X25		3	
3	86610326	Spring Washer	P336050006	8		3	
4	74418395	Moving Table (R)	7830945		NIC	1	
5	74415175	MDF Brush (I-1)	6823682			1	3.2mm
5	74571284	MDF Brush (I-1)	6823627 A			1	4.5mm
6	74722756	Button Head Screw	P334500021	M8X25		15	
7	74578826	MDF Brush (I-2)	6823683			1	3.2mm
7	74571327	MDF Brush (I-2)	6823628 A			1	4.5mm
8	74722756	Button Head Screw	P334500021	M8X25		5	
9	74415466	Cover Table (S-R)	6828662			1	
10	79565423	Hex Soc Cap Screw	P330230004	M8X15		5	
11	74415467	Angle	6828651 A			1	
12	79565423	Hex Soc Cap Screw	P330230004	M8X15		2	
13	74418396	LM Support	6872480			2	
14	79566121	Hex Soc Cap Screw	P330230007	M8X25		8	
15	74183005	Bolt	P330030007	M8X25		4	
16	74571308	Shim	6823604			2	
17	74415468	Moving Table Bracket	6828648			1	

Brush Table(13)

From Serial No.36102001 and after

Index	Code	Parts Name	Drawing No.	Type	Maker	Q'ty	Note
18	36367655	Hex Soc Cap Screw	P330250005	M12X30		4	
19	36176605	Bolt	P330030006	M8X20		4	
20	74571309	Shim	6826306			2	
21	79316507	Hex Soc Cap Screw	P330250009	M12X50		4	
22	74418397	Table Guide	6872436	R60X30X2.3		1	
23	10443146	Hex Soc Cap Screw	P330230012	M8X50		4	
24	74415446	Adjustable Bolt	6822812 A			8	
25	78180815	Nut	P332000022	M16(Thin)		8	
26	74707962	Hex Soc Cap Screw	P330230026	M8X120		8	
27	74418398	Auxiliary Arm (1)	6872481	R60X30X2.3		1	
28	10443146	Hex Soc Cap Screw	P330230012	M8X50		8	

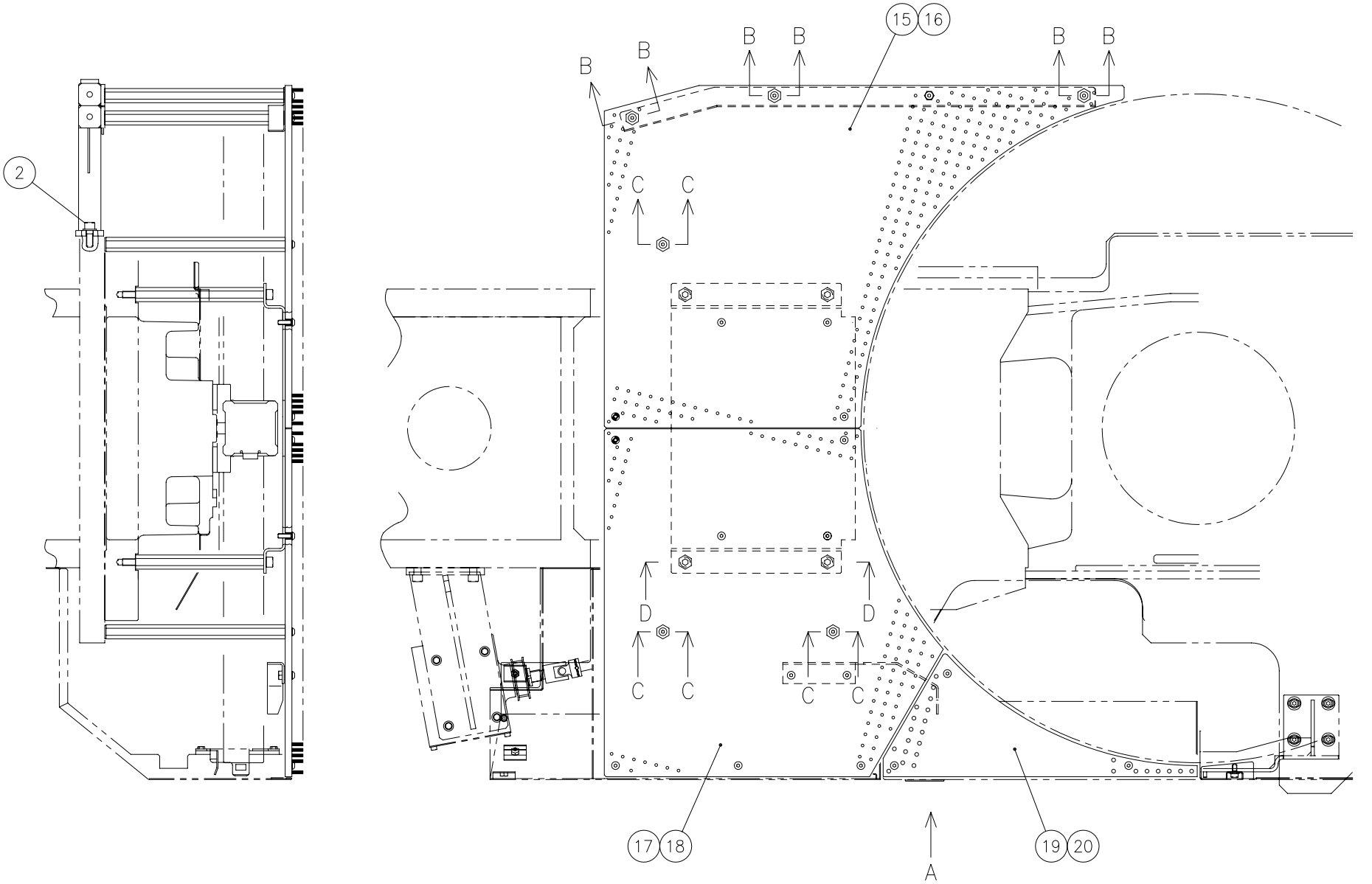

6872510

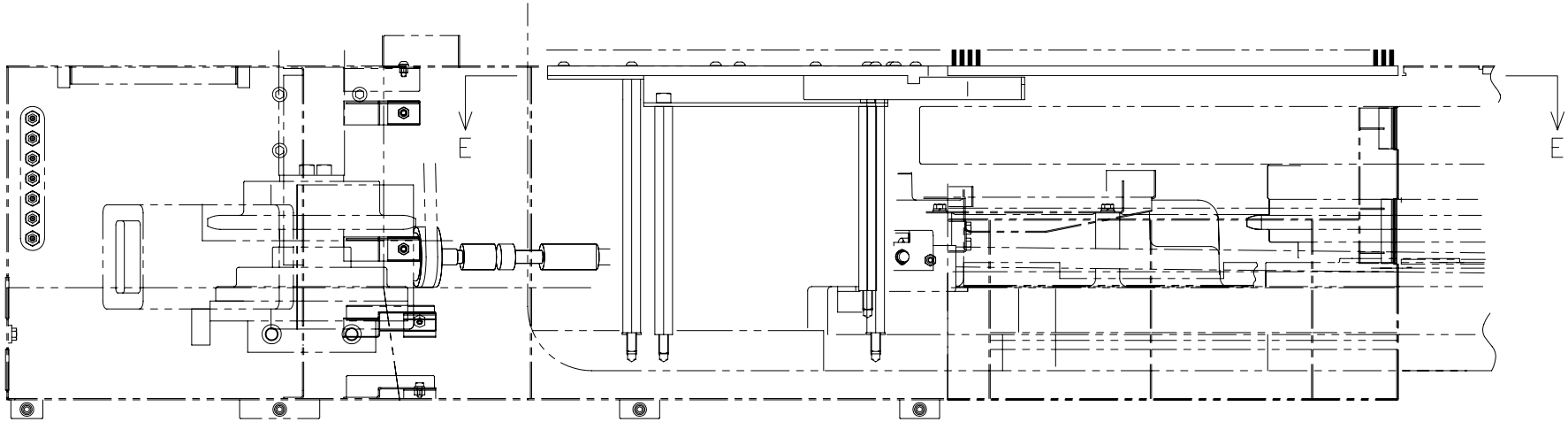

VIEW A

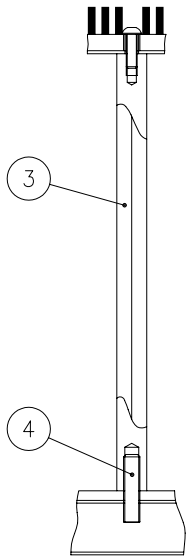

SECTION B–B

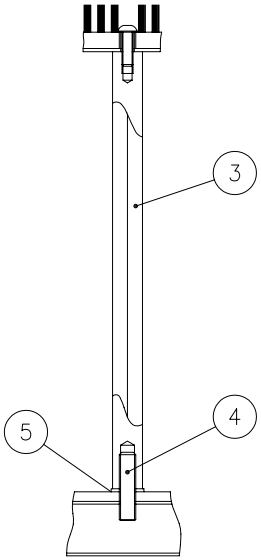

SECTION C–C

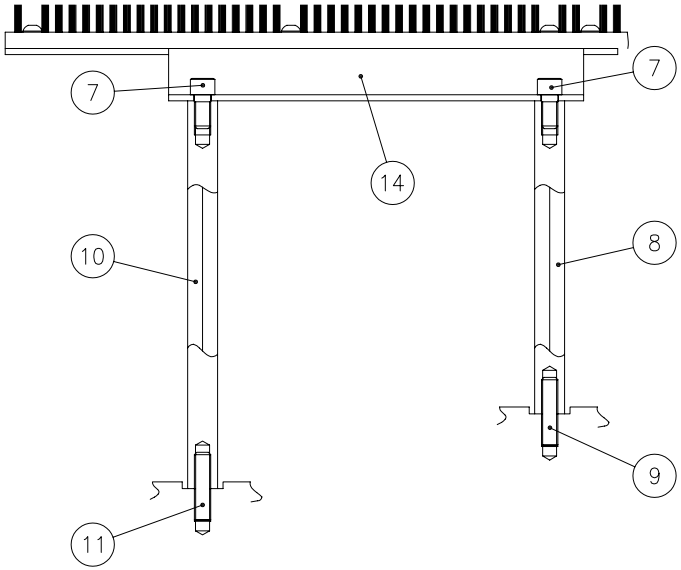

SECTION D–D

6872510

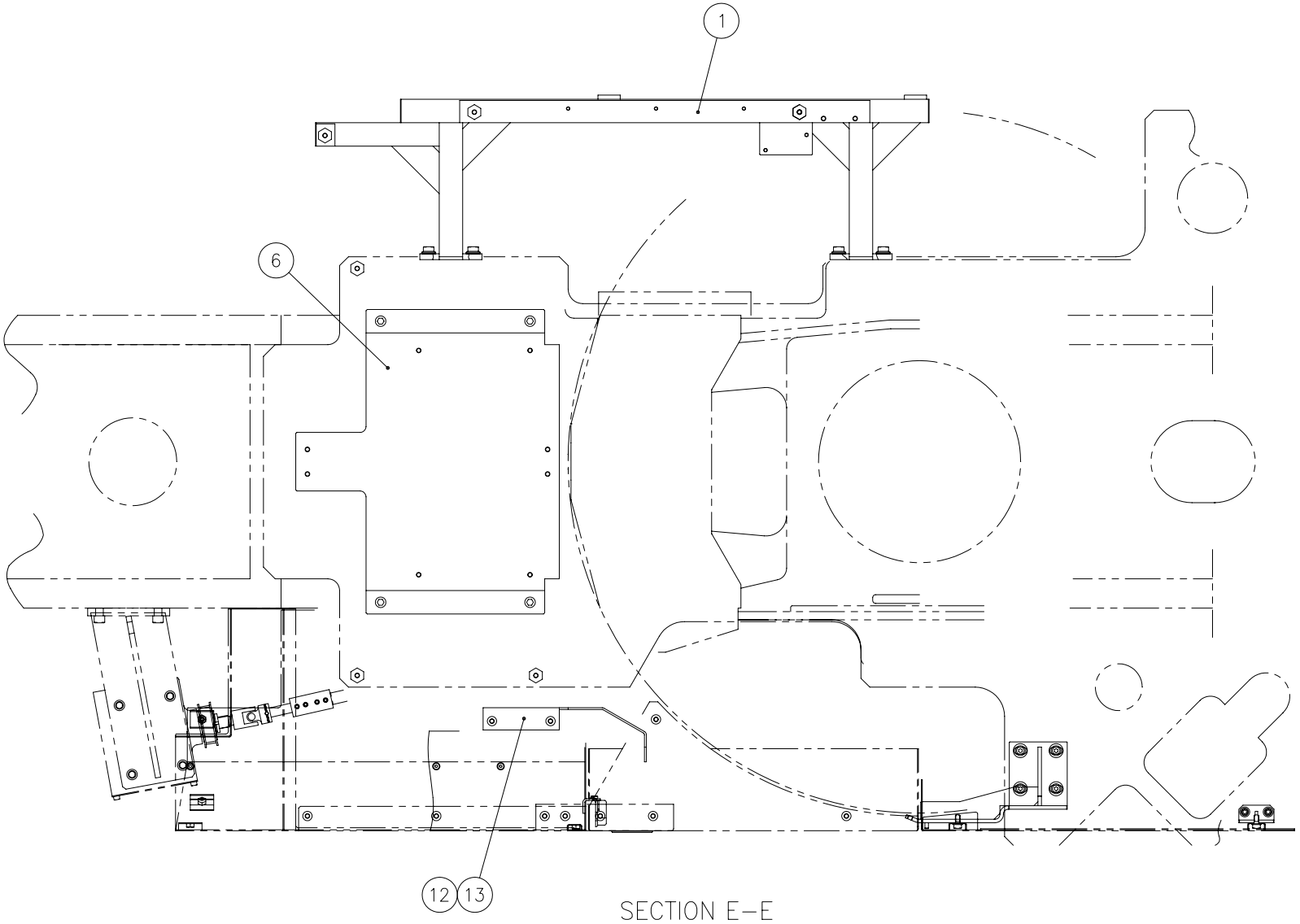

6872510

Brush Table(14) From Serial No.36102001 and after

Index	Code	Parts Name	Drawing No.	Type	Maker	Q'ty	Note
1	74418410	CL Base	6872507	40X40X2.3		1	
2	45251766	Flange Socket Bolt	P330468033	M12X30	NISSAN NEJI	4	
3	74570702	Stud	6821871	H22		6	
4	74386882	Socket Set Screw	P330550118	M12X45(Flat-end)		6	
5	86613931	Washer	P336000008	12(Regular Round)		3	
6	74571301	Brush Base Bracket	6823620			1	
7	79568704	Hex Soc Cap Screw	P330250004	M12X25		4	
8	74570688	Stud (CL2)	6813252	H22		2	
9	74386882	Socket Set Screw	P330550118	M12X45(Flat-end)		2	
10	74570701	Stud	6813256	H22		2	
11	74386882	Socket Set Screw	P330550118	M12X45(Flat-end)		2	
12	74575201	Lower Turret Door Support	6821954			1	
13	74722756	Button Head Screw	P334500021	M8X25		2	
14	74418411	Angle	6872513			1	
15	74418412	MDF Brush (U)	6872514			1	3.2mm
15	74418413	MDF Brush (U)	6878321			1	4.5mm
16	74722756	Button Head Screw	P334500021	M8X25		9	
17	74578863	MDF Brush (S)	6823687 A			1	3.2mm
17	74571293	MDF Brush (S)	6823632 A			1	4.5mm

Brush Table(14)

From Serial No.36102001 and after

Index	Code	Parts Name	Drawing No.	Type	Maker	Q'ty	Note
18	74722756	Button Head Screw	P334500021	M8X25		9	
19	74575091	MDF Brush (R)	6823643			1	3.2mm
19	74571294	MDF Brush (R)	6821879 A			1	4.5mm
20	74722756	Button Head Screw	P334500021	M8X25		3	

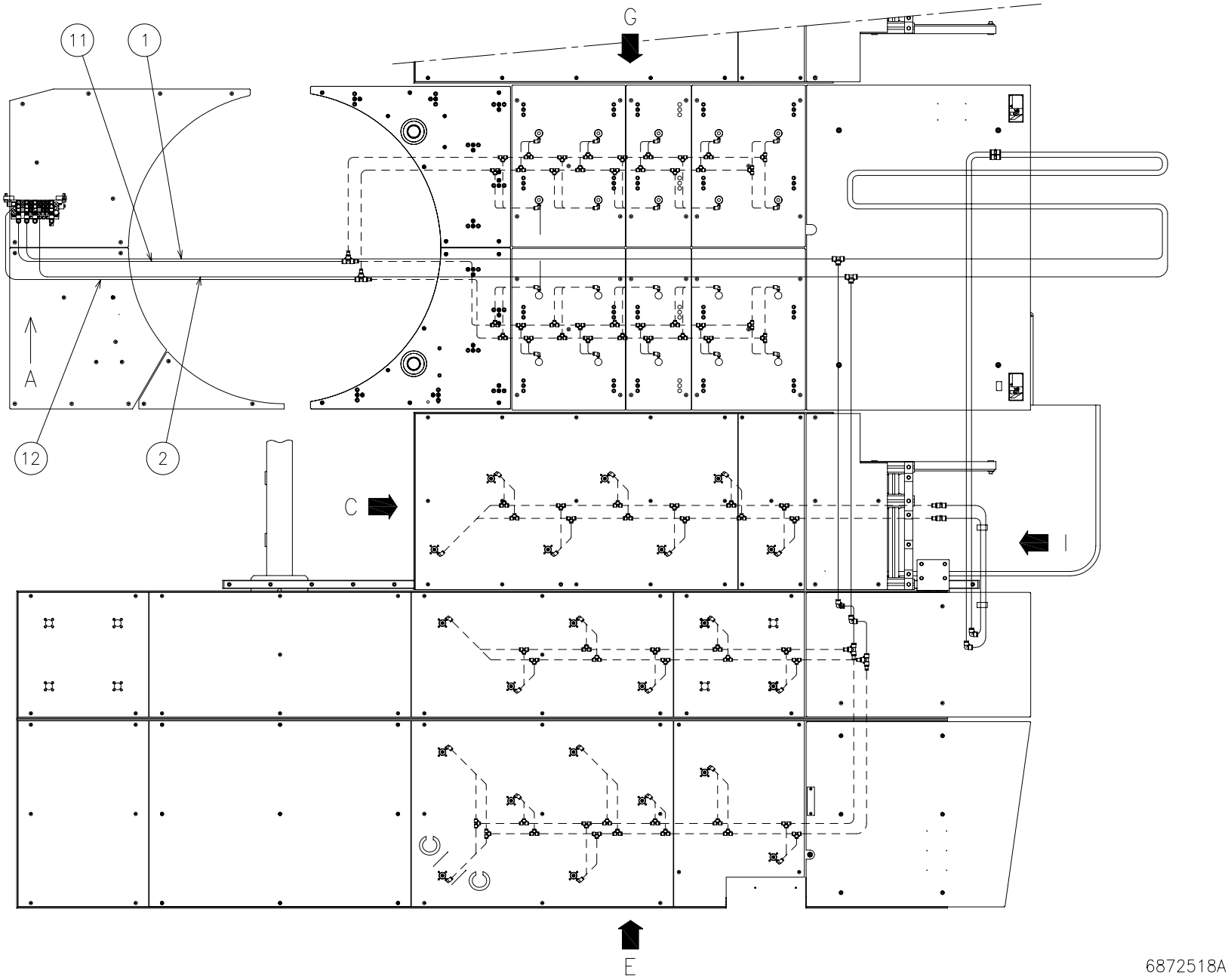
G
11
1
A
12
2
C
I
E
6872518A

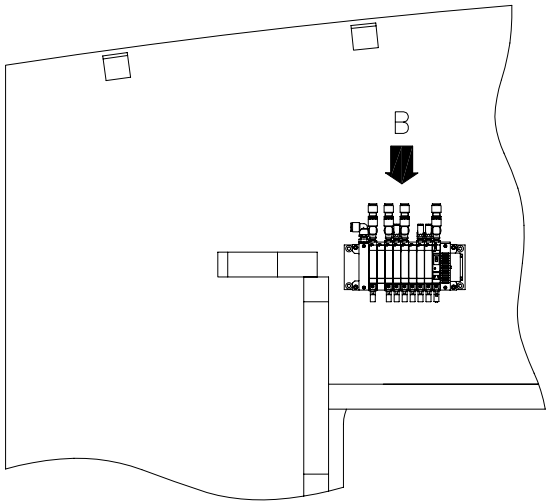

VIEW A

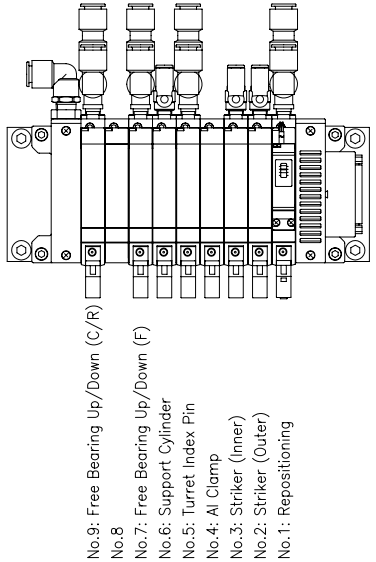

DETAIL B

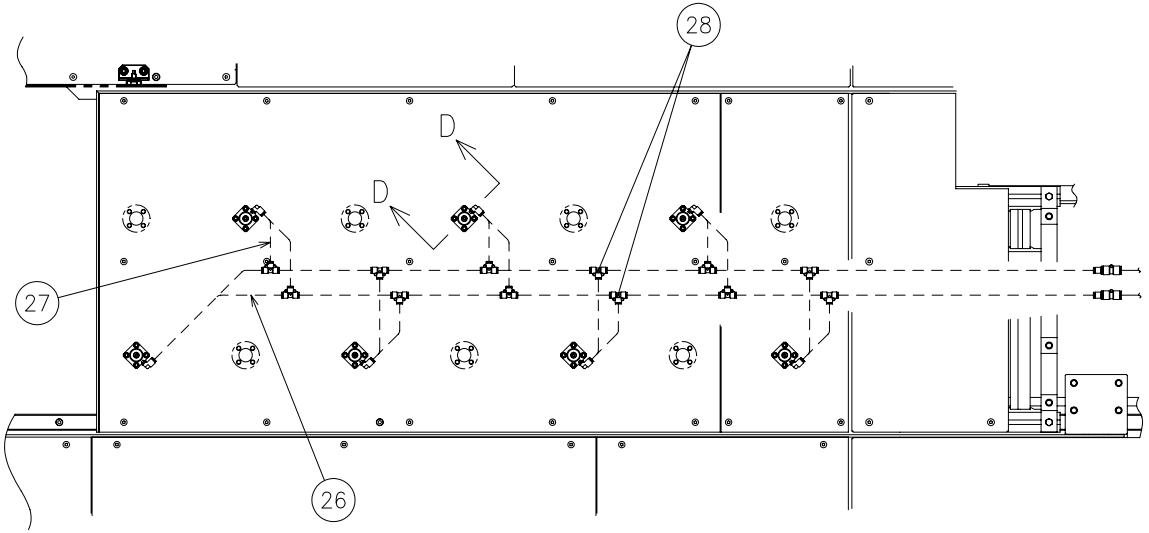

DETAIL C

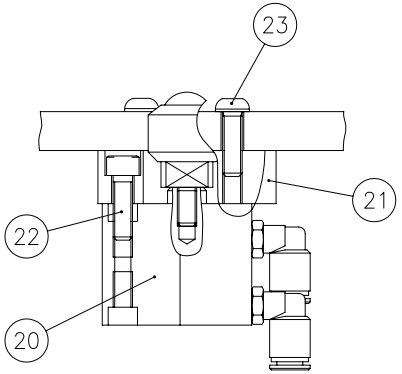

SECTION D–D (7 Sets)

6872518A

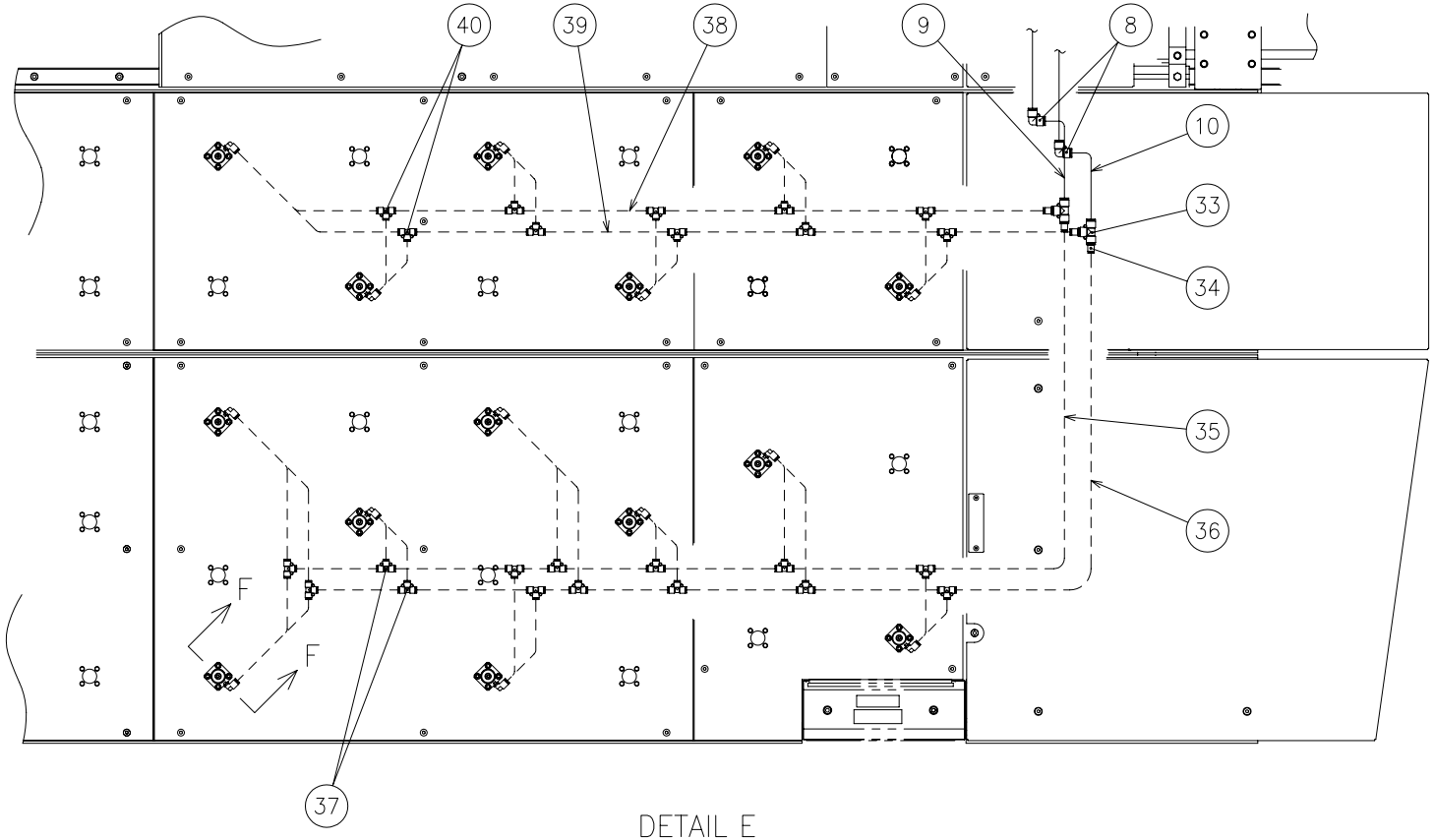

DETAIL E

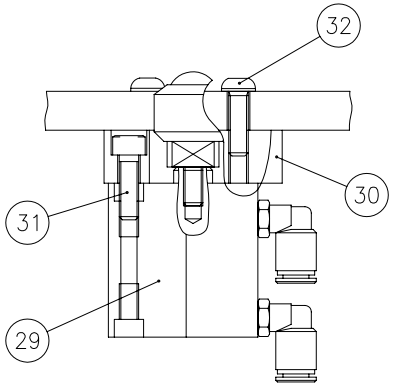

SECTION F–F (14 Sets)

6872518A

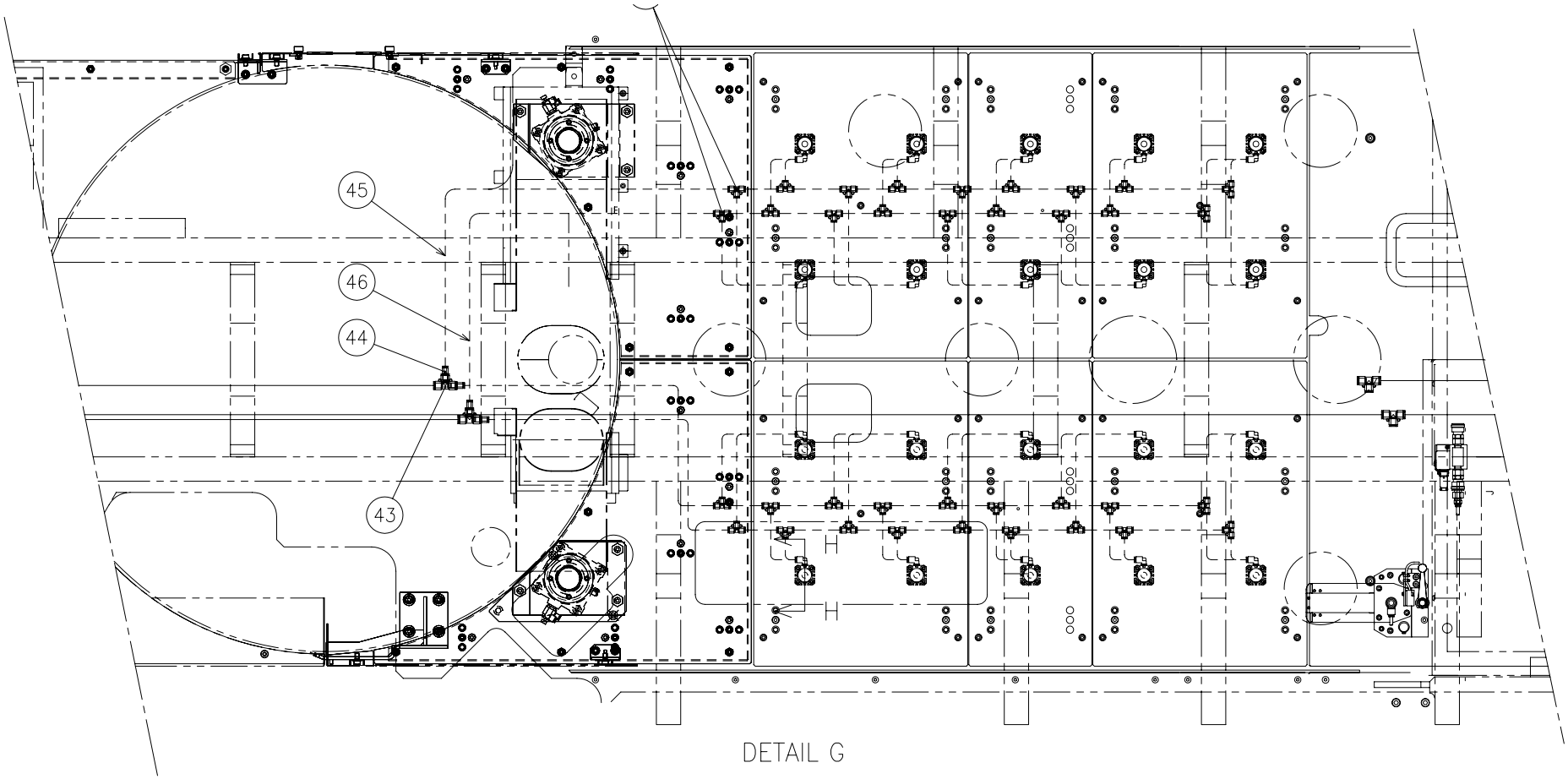

DETAIL G

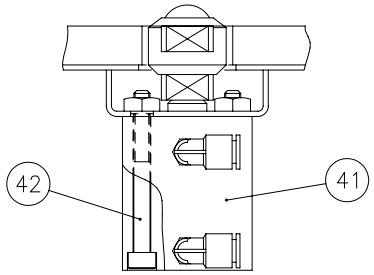

SECTION H–H (20 Sets)

6872518A

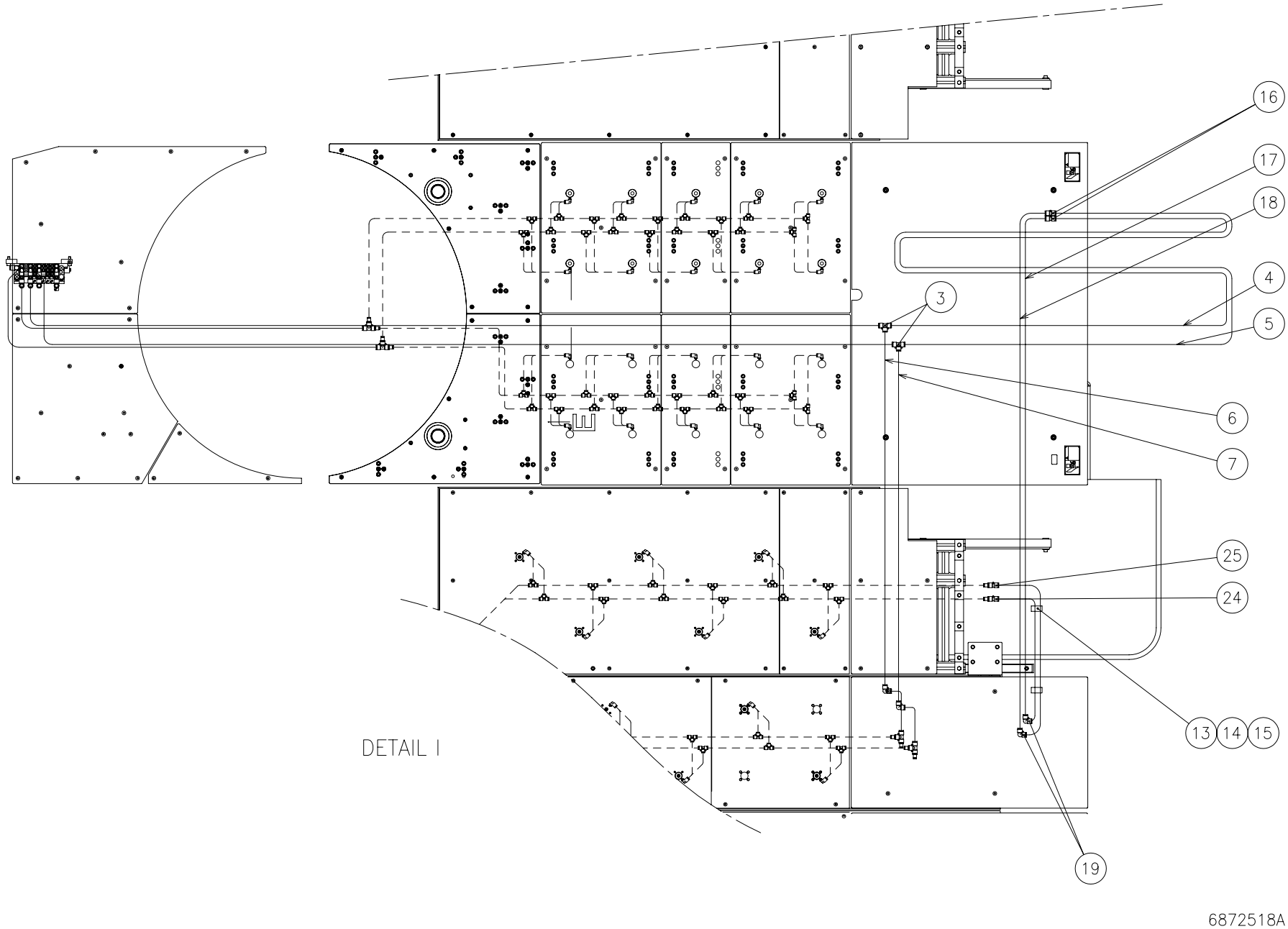
16
17
18
4
3
5
6
7
25
24
13
14
15
19
DETAIL I
6872518A

Brush Table(15) From Serial No.36102001 and after

Index	Code	Parts Name	Drawing No.	Type	Maker	Q'ty	Note
1	74415489	Plastic Hose	P230242159	N2-4-10X8(Blue)-7M	NITTA MOORE	1	
2	74415487	Plastic Hose	P230242162	N2-4-10X8(Red)-7M	NITTA MOORE	1	
3	74379378	Instant Fitting	P586604013	EUT10	NITTA MOORE	2	
4	74415489	Plastic Hose	P230242165	N2-4-10X8(Blue)-5M	NITTA MOORE	1	
5	74415487	Plastic Hose	P230242167	N2-4-10X8(Red)-5M	NITTA MOORE	1	
6	74415489	Plastic Hose	P230242159	N2-4-10X8(Blue)-7M	NITTA MOORE	1	
7	74415487	Plastic Hose	P230242162	N2-4-10X8(Red)-7M	NITTA MOORE	1	
8	74379550	Instant Fitting	P586564016	EUL10	NITTA MOORE	2	
9	74415489	Plastic Hose	P230242166	N2-4-10X8(Blue)-1M	NITTA MOORE	1	
10	74415487	Plastic Hose	P230242168	N2-4-10X8(Red)-1M	NITTA MOORE	1	
11	74415489	Plastic Hose	P230242157	N2-4-10X8(Blue)-4M	NITTA MOORE	1	
12	74415487	Plastic Hose	P230242158	N2-4-10X8(Red)-4M	NITTA MOORE	1	
13	31169042	Cable Band	P381058018	KR8G5	TYTON	2	
14	31183033	Hex Soc Cap Screw	P330220003	M6X10		2	
15	10560435	Cable Band	P381058011	CV-100N	SHIBAKEI	2	
16	74565147	Instant Fitting	P586604021	EUC10	NITTA MOORE	2	
17	74415489	Plastic Hose	P230242169	N2-4-10X8(Blue)-2M	NITTA MOORE	1	
18	74415487	Plastic Hose	P230242170	N2-4-10X8(Red)-2M	NITTA MOORE	1	
19	74379550	Instant Fitting	P586564016	EUL10	NITTA MOORE	2	

Brush Table(15) From Serial No.36102001 and after

Index	Code	Parts Name	Drawing No.	Type	Maker	Q'ty	Note
20	74568593	Cylinder	7832806 A	SSD-25-15	CKD	1	
21	74569774	Cylinder Collar	6821848			1	
22	79567722	Hex Soc Cap Screw	P330220009	M6X20		4	
23	74314603	Button Head Screw	P334500016	M6X20		4	
24	74565147	Instant Fitting	P586604021	EUC10	NITTA MOORE	2	
25	74562784	Instant Fitting	P586654002	ER6-10	NITTA MOORE	2	
26	74415492	Plastic Hose	P230222148	N2-4-6X4(Blue)-10M	NITTA MOORE	1	
27	74415488	Plastic Hose	P230222149	N2-4-6X4(Red)-10M	NITTA MOORE	1	
28	74338327	Instant Fitting	P586604012	EUT6	NITTA MOORE	12	
29	74568610	Cylinder	7832804 A	SSD-L-25-15-T5V5-H	CKD	1	
30	74569774	Cylinder Collar	6821848			1	
31	79567722	Hex Soc Cap Screw	P330220009	M6X20		4	
32	74314603	Button Head Screw	P334500016	M6X20		4	
33	74379378	Instant Fitting	P586604013	EUT10	NITTA MOORE	2	
34	74562784	Instant Fitting	P586654002	ER6-10	NITTA MOORE	4	
35	74415492	Plastic Hose	P230222148	N2-4-6X4(Blue)-10M	NITTA MOORE	1	
36	74415488	Plastic Hose	P230222149	N2-4-6X4(Red)-10M	NITTA MOORE	1	
37	74338327	Instant Fitting	P586604012	EUT6	NITTA MOORE	14	
38	74415492	Plastic Hose	P230222148	N2-4-6X4(Blue)-10M	NITTA MOORE	1	

Brush Table(15)

From Serial No.36102001 and after

Index	Code	Parts Name	Drawing No.	Type	Maker	Q'ty	Note
39	74415488	Plastic Hose	P230222149	N2-4-6X4(Red)-10M	NITTA MOORE	1	
40	74338327	Instant Fitting	P586604012	EUT6	NITTA MOORE	10	
41	74568610	Cylinder	7832804 A	SSD-L-25-15-T5V5-H	CKD	1	
42	74706157	Hex Soc Cap Screw	P330210015	M5X50		4	
43	74379378	Instant Fitting	P586604013	EUT10	NITTA MOORE	2	
44	74562784	Instant Fitting	P586654002	ER6-10	NITTA MOORE	4	
45	74415492	Plastic Hose	P230222146	N2-4-6X4(Blue)-8M	NITTA MOORE	2	
46	74415488	Plastic Hose	P230222147	N2-4-6X4(Red)-8M	NITTA MOORE	2	
47	74338327	Instant Fitting	P586604012	EUT6	NITTA MOORE	36	

Brush Table(16) <Duct,Assist Block>

From Serial No.36102001 and after

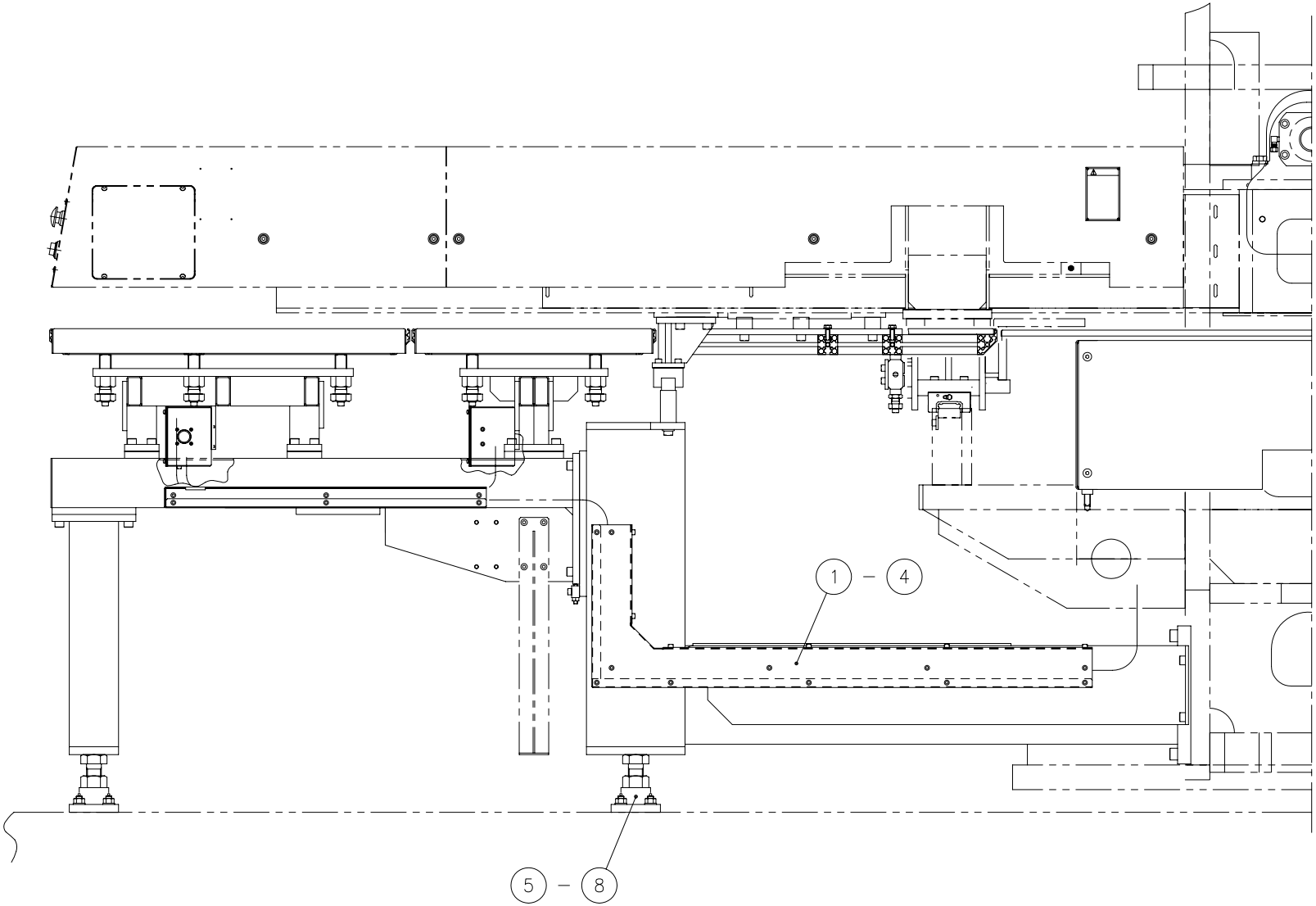

6871034
6879671
(6872516)

Brush Table(16)

From Serial No.36102001 and after

Index	Code	Parts Name	Drawing No.	Type	Maker	Q'ty	Note
1	74575150	Duct (L)	6823854			1	
2	79564305	Hex Soc Cap Screw	P330220006	M6X15		5	
3	74575235	Duct Cover (L)	6823857			1	
4	79564305	Hex Soc Cap Screw	P330220006	M6X15		12	
5	74388364	Assist Block (1)	6597283			4	
6	74569743	Adjustable Bolt (M30)	6911452	M30X90		4	
7	74320426	Nut	P332000012	M30		4	
8	86614132	Anchor	P338213005	C-1290	SANKO Technology	8	
9	74419462	Level Adjuster Base Plate	3808831			4	List Only
10	86614132	Anchor	P338213005	C-1290	SANKO Technology	8	List Only

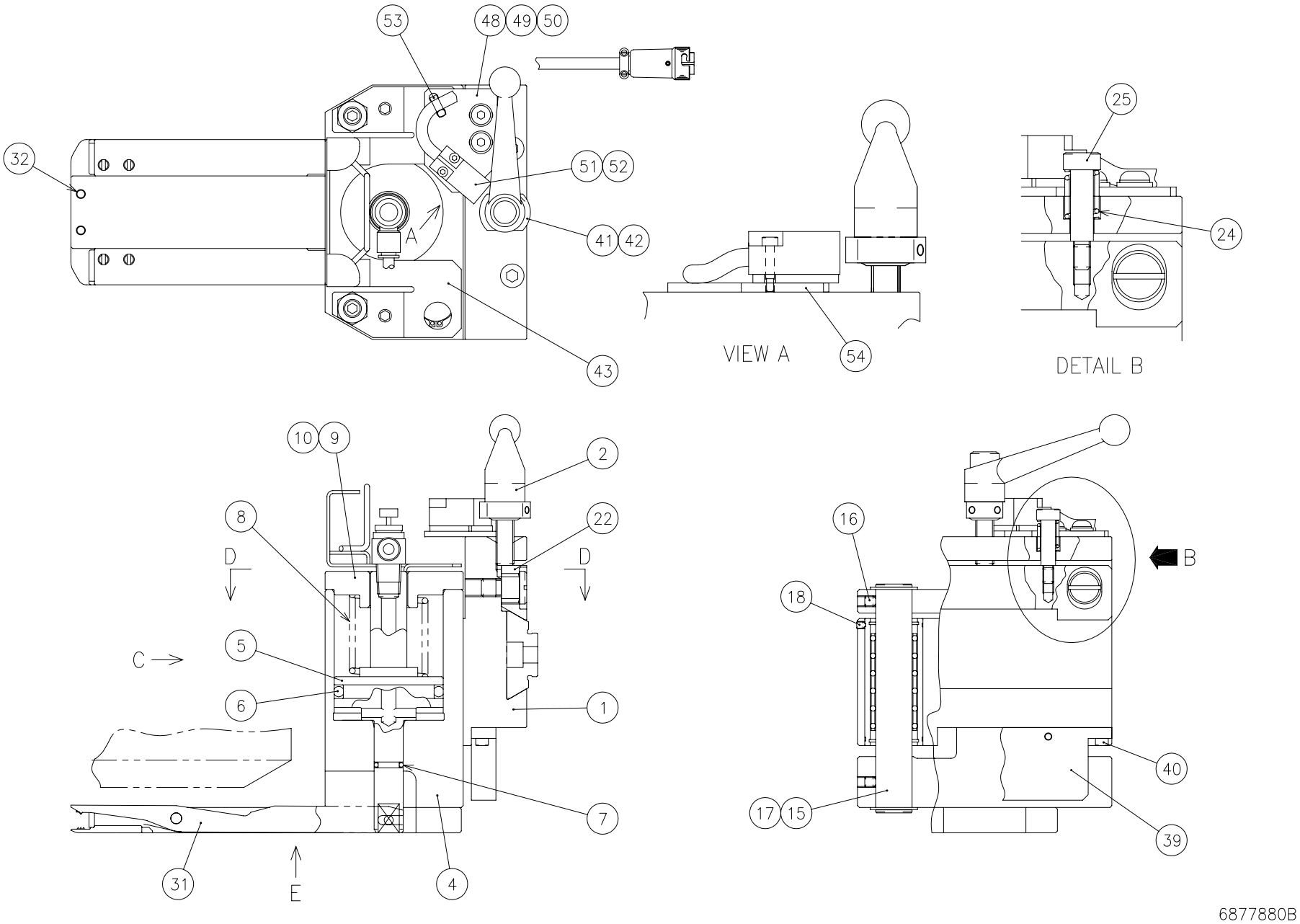
53
48
49
50
32
51
52
A
41
42
43
VIEW A
54
25
24
DETAIL B
10
9
2
8
22
D
D
C
5
6
1
7
31
E
4
16
B
18
40
17
15
39
6877880B

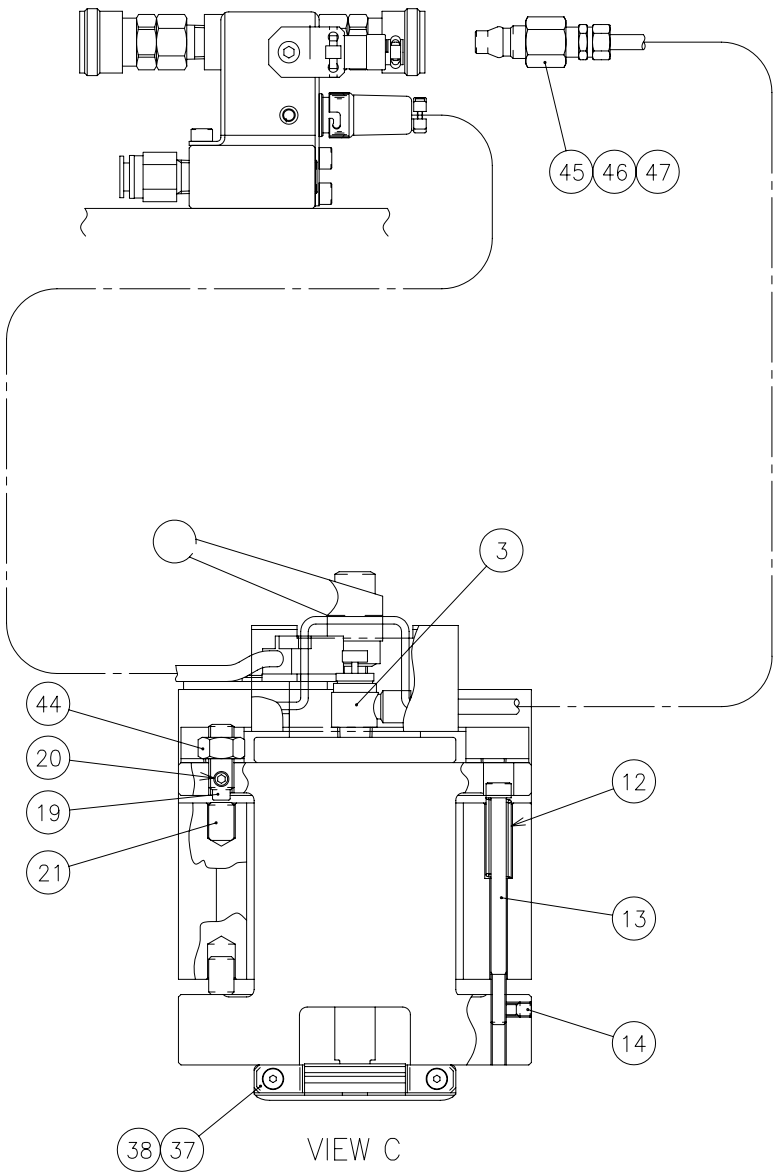
45
46
47
3
44
20
19
21
12
13
14
38
37
VIEW C

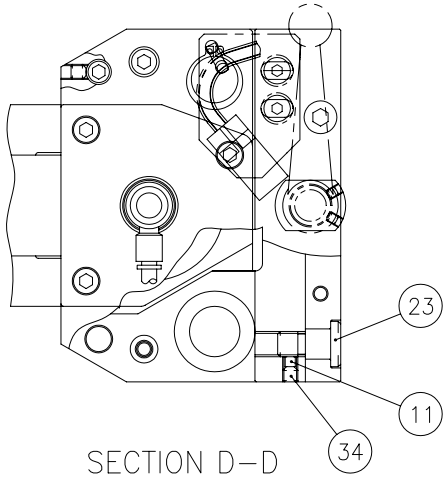
23
11
34
SECTION D–D

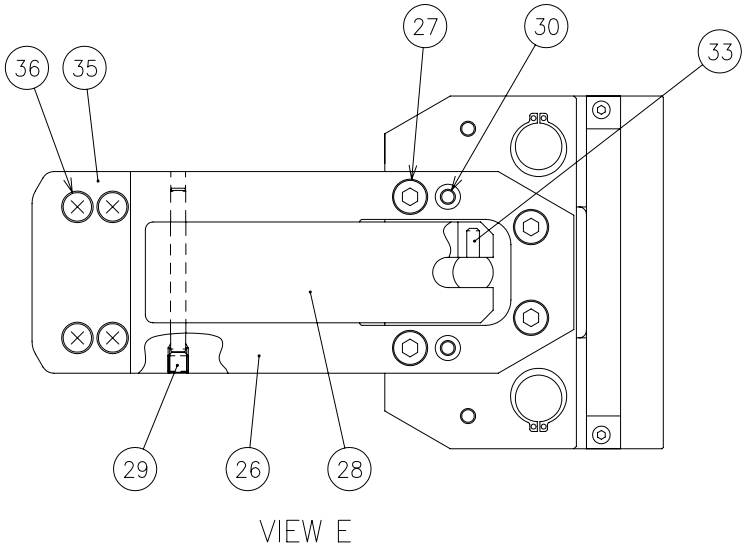
36
35
27
30
33
29
26
28
VIEW E

6877880B

Unit No. 37

Pneumatic Clamp

From Serial No.36102001 and after

Index	Code	Parts Name	Drawing No.	Type	Maker	Q'ty	Note
1	74417227	Clamp Housing	6877892			1	
2	61168926	Lever	P437354009	KR10X25	IMAO Mfg	1	
3	74389227	Air Flow Control Valve	P555002118	AS2201F-02-06K	SMC	1	
4	74388637	Cylinder	0826183 D			1	
5	74388638	Piston	0826184 D			1	
6	74571116	O Ring	P590002050	1A-P50A	NOK	1	
7	74314826	O Ring	P590002012	1A-P12	NOK	1	
8	74335606	Spring	0806005			1	
9	74335901	Cylinder Cover	0826188			1	
10	79564305	Hex Soc Cap Screw	P330220006	M6X15		4	
11	74335701	Insert	0806073			4	
12	74335602	Hook Spring	0826218			2	
13	74304955	Hex Soc Cap Screw	P330220024	M6X90		2	
14	36147504	Socket Set Screw	P330550024	M6X6(Flat-end)		2	
15	74571151	Stroke Bearing	7830778	STF203270+126L	THK	2	
16	74306405	Socket Set Screw	P330590017	M6X6(Cup-end)		4	
17	86611033	Locating Snap Ring	P406108043	STW-20	OCHIAI	4	
18	74183112	Socket Set Screw	P330580006	M4X5(Cone-end)		2	
19	10380429	Socket Set Screw	P330570035	M10X30(Dog-end)		2	

Index	Code	Parts Name	Drawing No.	Type	Maker	Q'ty	Note
20	74306405	Socket Set Screw	P330590017	M6X6(Cup-end)		2	
21	74335627	Cushion	0806009			4	
22	74335706	Lock Plate	0816004 A			1	
23	74335716	Pressure Pin	0816005 B			2	
24	74335617	Release Spring	0816006			2	
25	74383912	Shoulder Bolt	P338134051	MSB8-25	MISUMI	2	
26	74571335	Clamp Base (Pneumatic)	0826270 A			1	
27	79565423	Hex Soc Cap Screw	P330230004	M8X15		4	
28	74571118	Parallel Pin	0826285			1	
29	10354917	Socket Set Screw	P330590023	M8X8(Cup-end)		1	
30	74562190	Parallel Pin	P337054046	MSTM10-30	MISUMI	2	
31	74569333	Clamper (Pneumatic)	0826275			1	
32	74335826	Socket Set Screw	0826186			2	
33	31172625	Parallel Pin	P337020027	A-5X35		1	
34	36147504	Socket Set Screw	P330550024	M6X6(Flat-end)		2	
35	74161576	Clamp Plate (Pneumatic)	0826272			1	
36	74569335	Flat Head Screw	0826035	M6X12-SUS304		4	
37	74569336	Stopper Plate	0816026 D			2	
38	79319751	Flat Head Bolt	P334520011	M4X10		2	

Index	Code	Parts Name	Drawing No.	Type	Maker	Q'ty	Note
39	74417232	Sensor Dog	6877897			1	
40	86620301	Hex Soc Cap Screw	P330200018	M4X15		2	
41	74575238	Dog	6826267			1	
42	10560034	Socket Set Screw	P330590005	M4X4(Cup-end)		2	
43	74419454	Cable Bracket	6873680			1	
44	10427991	Nut	P332000006	M10		2	
45	31182101	Plastic Hose	P230223015	UH30-06(Black)-1M	JUNKOSHA	1	
46	74563771	Instant Fitting	P586535043	WN-06-02	JUNKOSHA	1	
47	74717014	Quick Connect Joint	P589026011	20PF	NITTO KOHKI	1	
48	74419245	Sensor Bracket	6826888	40X3.2-57		1	
49	36379029	Button Head Screw	P334500013	M6X10		2	
50	79565419	Washer	P336000005	6(Regular Round)		2	
51	74419246	Sensor Cable	6826889			1	
52	31178039	Hex Soc Cap Screw	P330200007	M3X16		2	
53	74569473	Cable Band	P381058104	SKB-85MM	KITAGAWA	2	
54	74571342	Insulating Plate	6827529			1	

From Serial No.36102001 and after

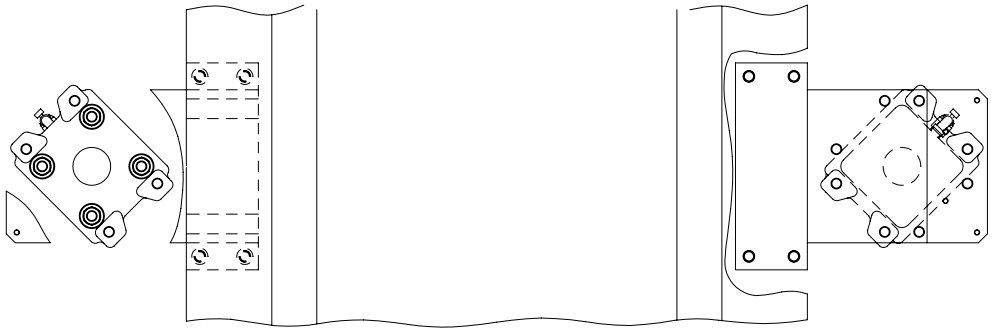

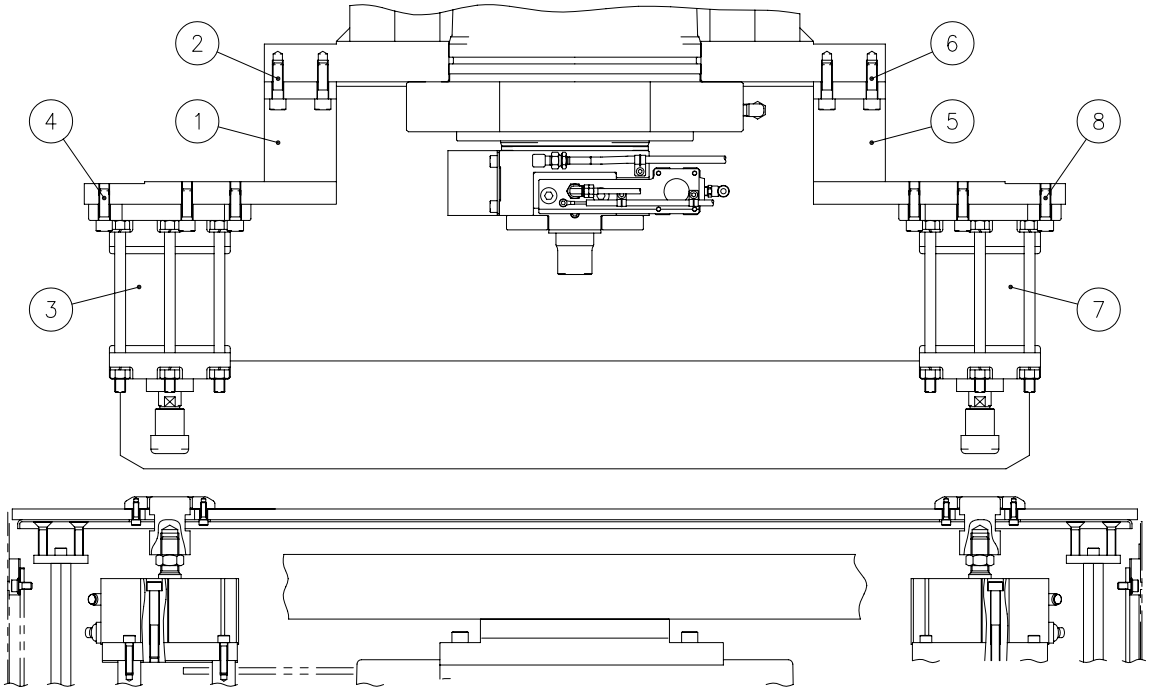

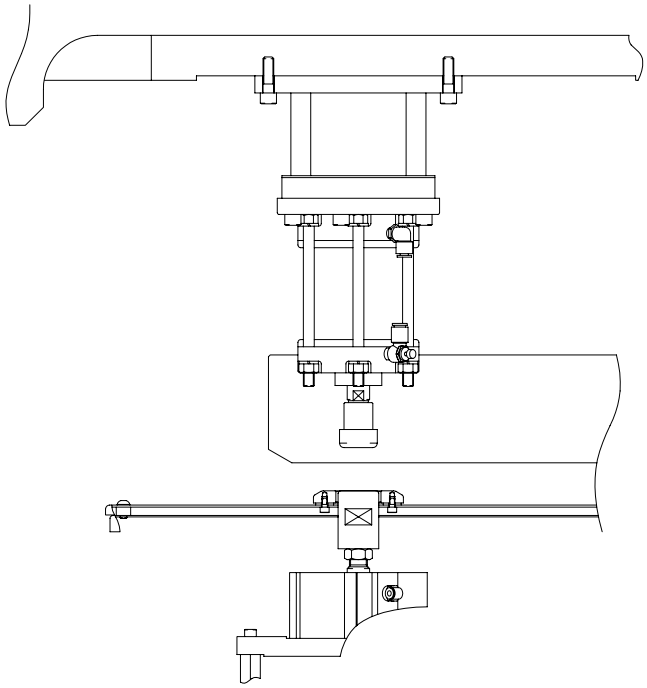

6876360

Unit No. 38

Repositioning

From Serial No.36102001 and after

Index	Code	Parts Name	Drawing No.	Type	Maker	Q'ty	Note
1	74569820	Cylinder Base	6812821 A			1	
2	86213032	Hex Soc Cap Screw	P330250007	M12X40		4	
3	74419247	Air Cylinder (Repositioning)	7831582	CA2G80-60-DCI0896I	SMC	1	
4	36110743	Hex Soc Cap Screw	P330250006	M12X35		4	
5	74569820	Cylinder Base	6812821 A			1	
6	86213032	Hex Soc Cap Screw	P330250007	M12X40		4	
7	74419247	Air Cylinder (Repositioning)	7831582	CA2G80-60-DCI0896I	SMC	1	
8	36110743	Hex Soc Cap Screw	P330250006	M12X35		4	

From Serial No.36102001 and after

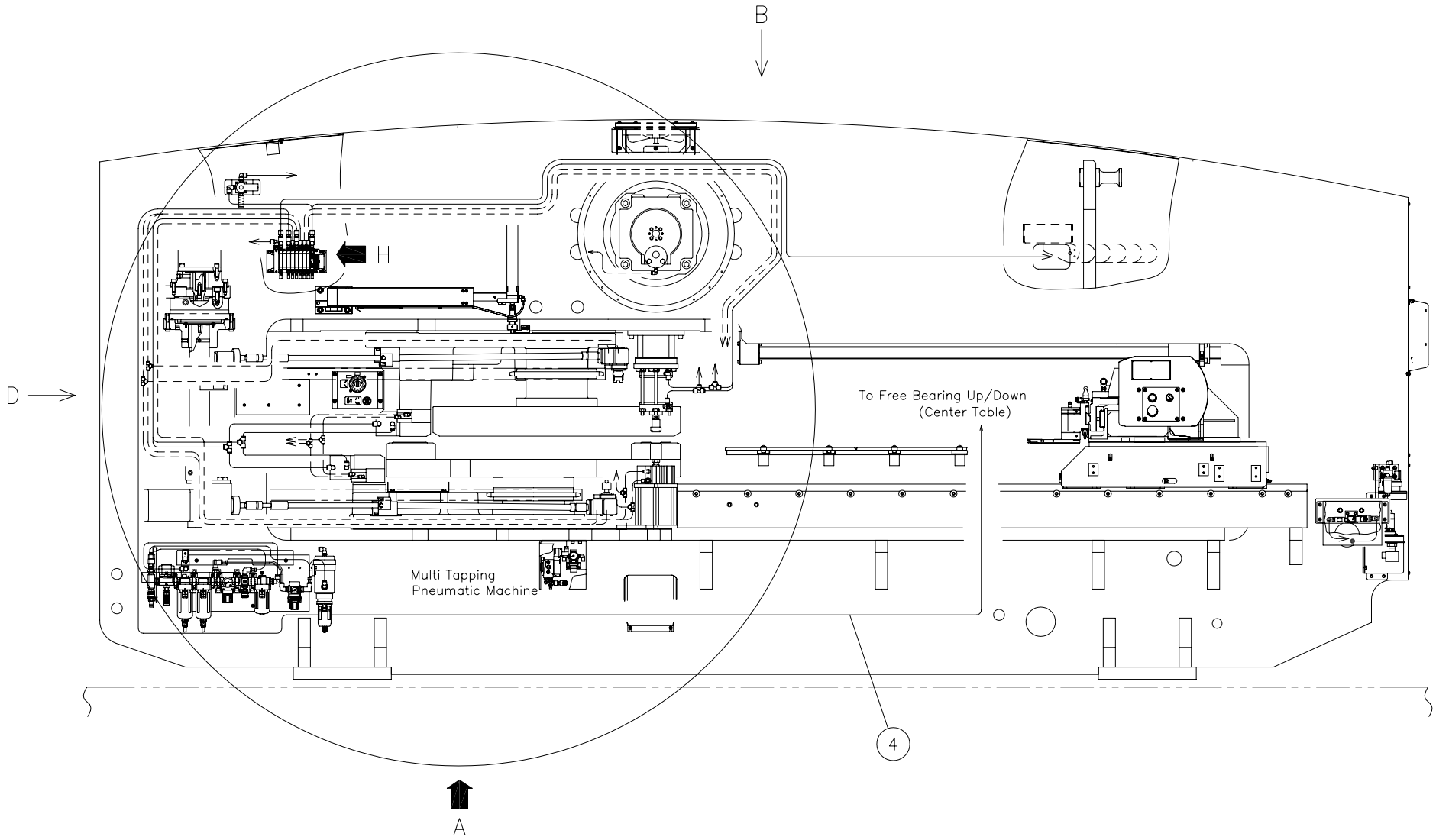

6876985C

From Serial No.36102001 and after

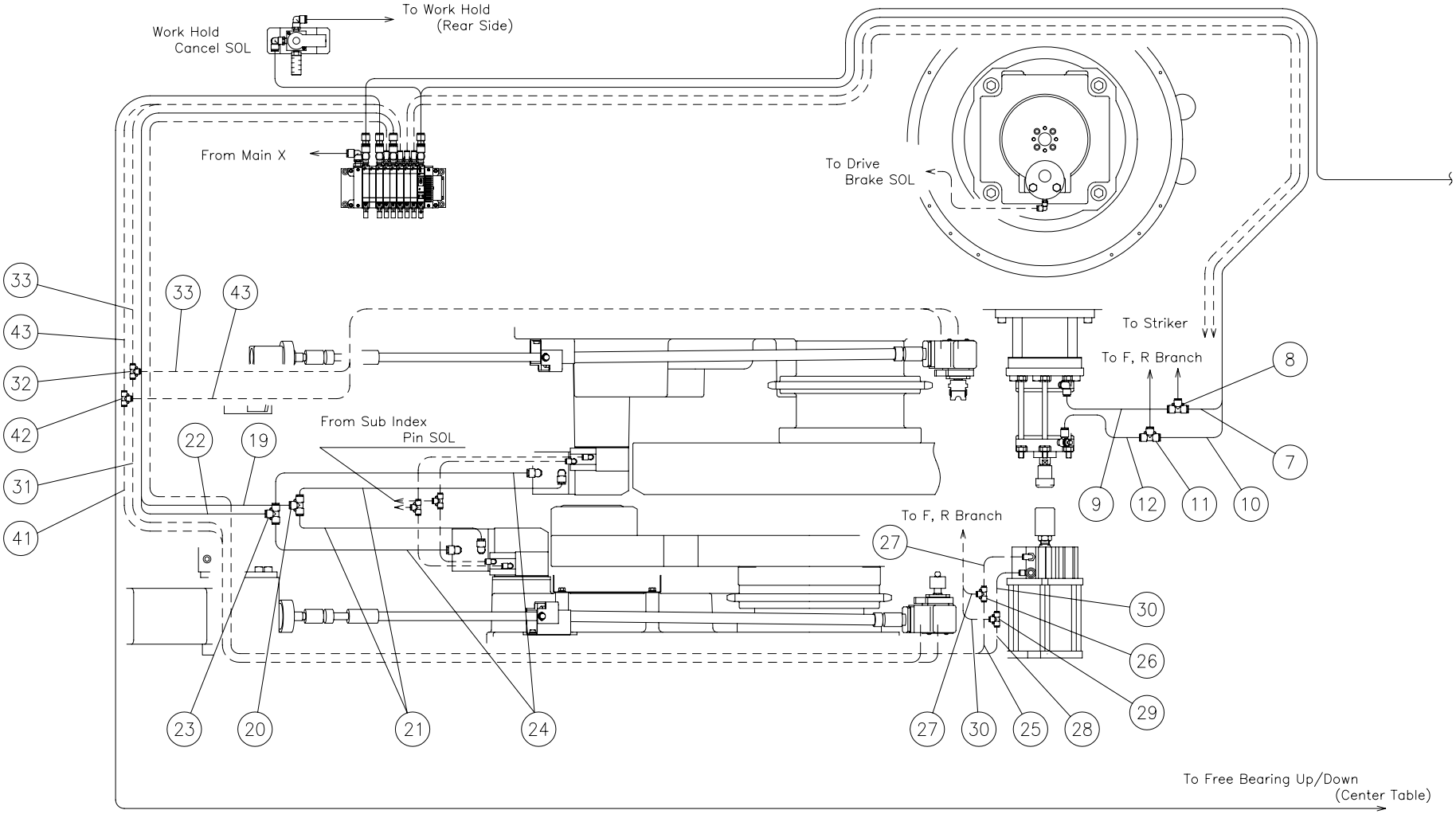

DETAIL A

6876985C

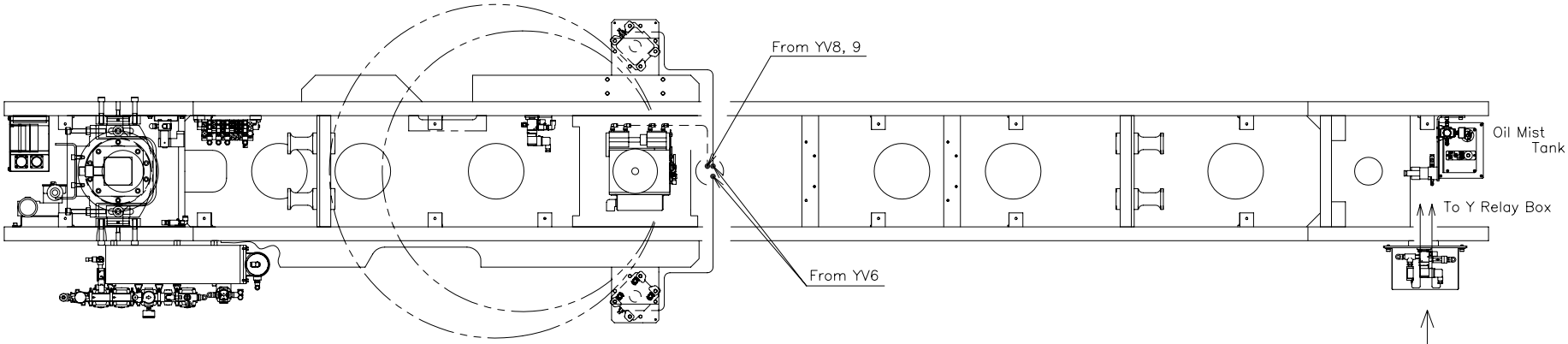

VIEW B

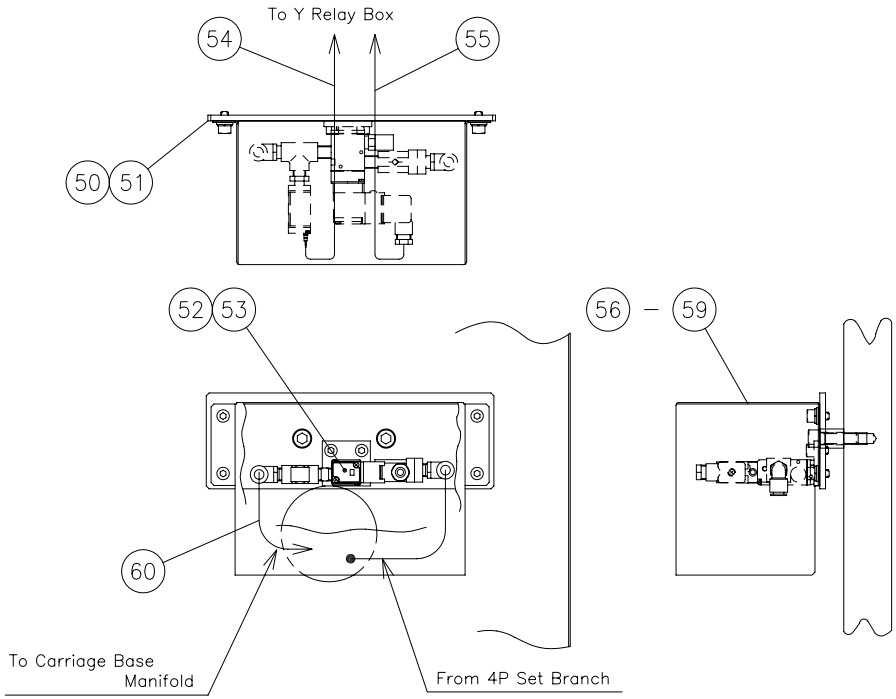

VIEW C

6876985C

From Serial No.36102001 and after

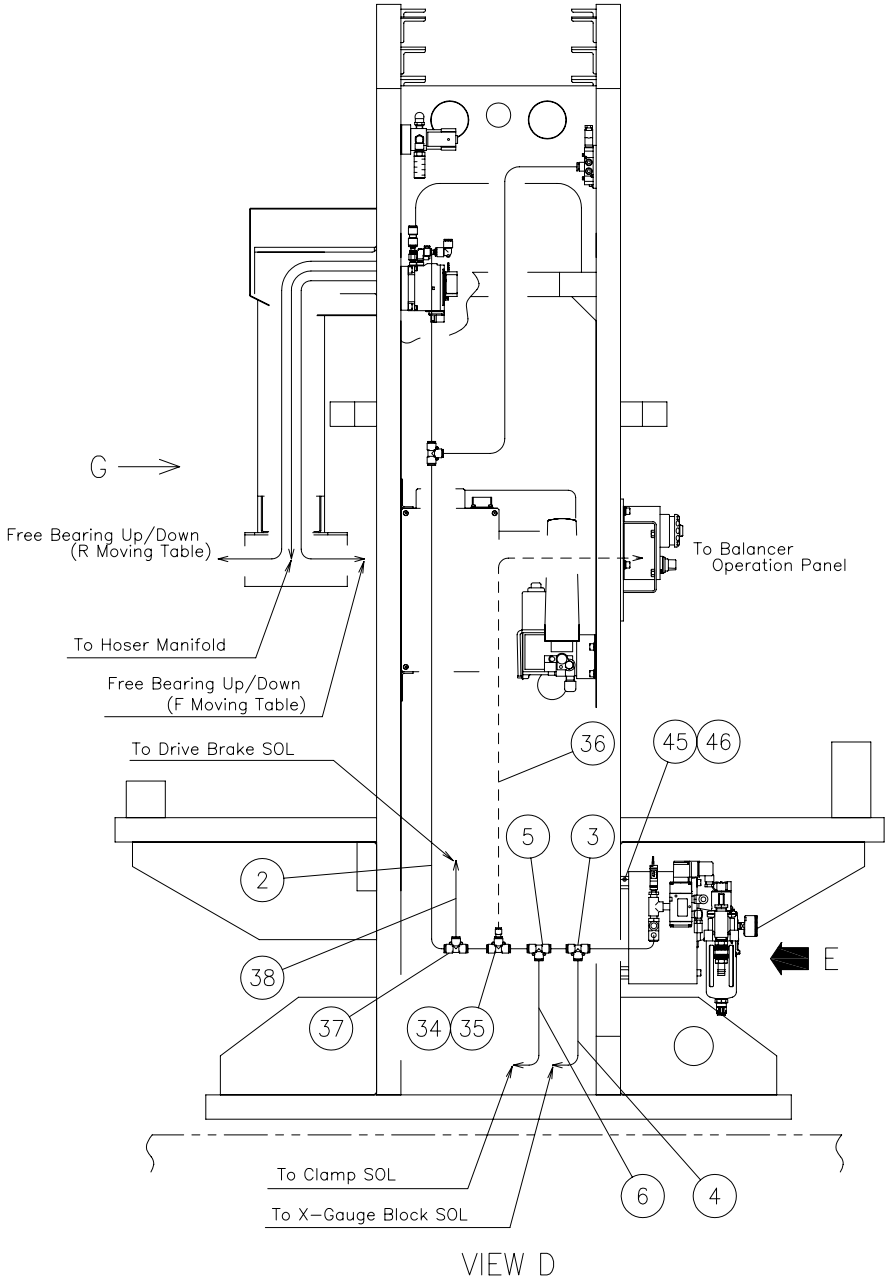

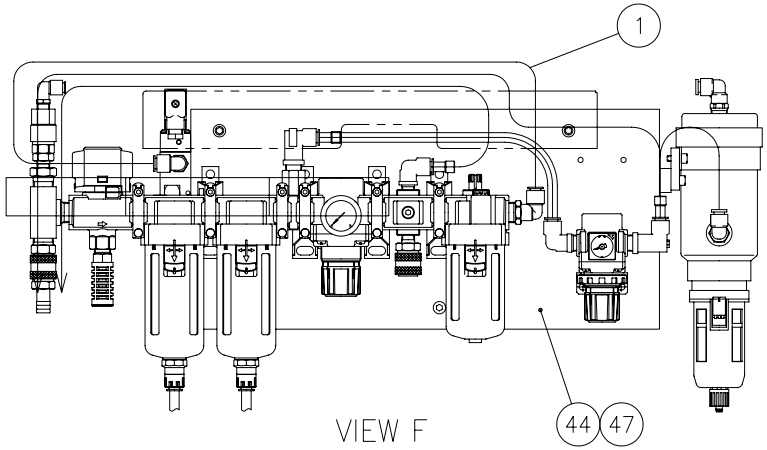

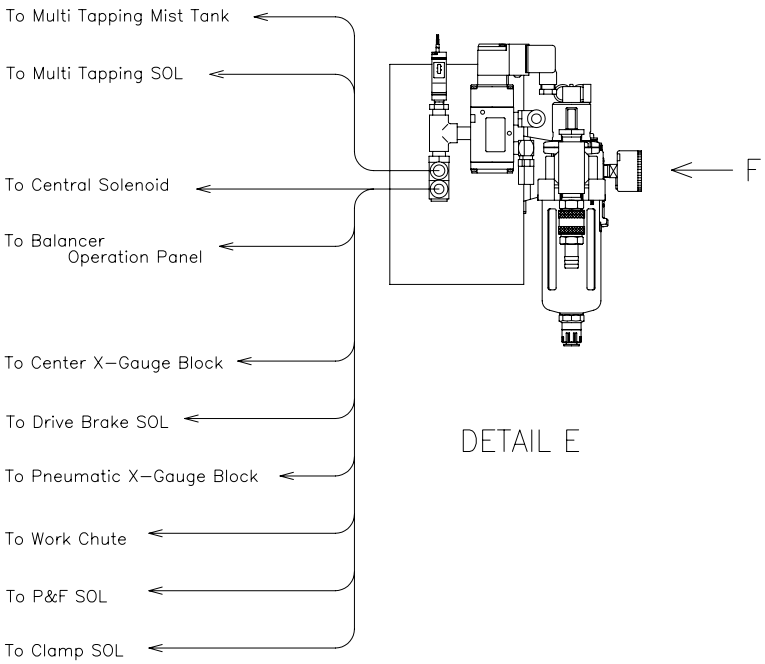

6876985C

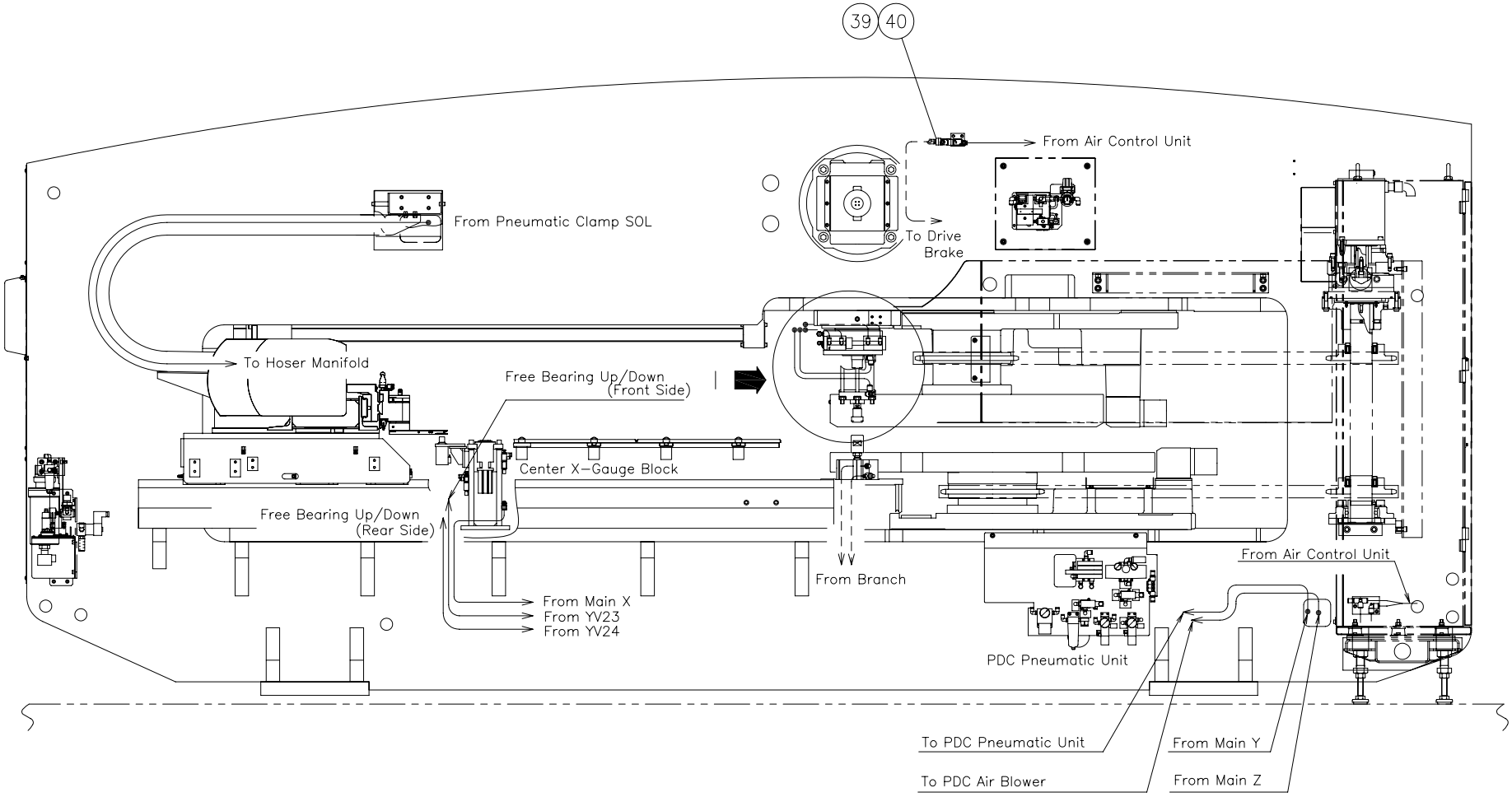

VIEW G

6876985C

From Serial No.36102001 and after

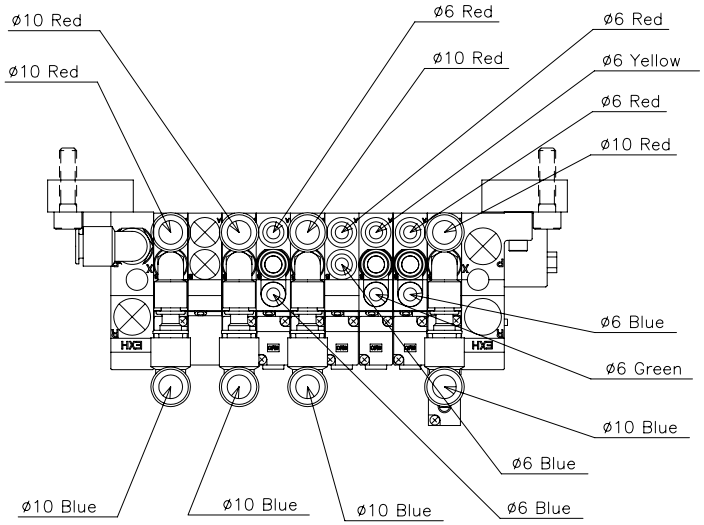

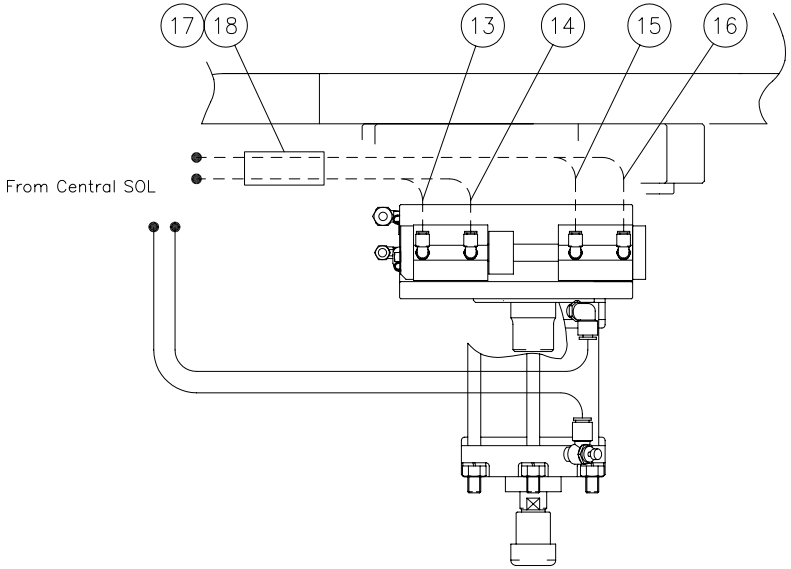

DETAIL I

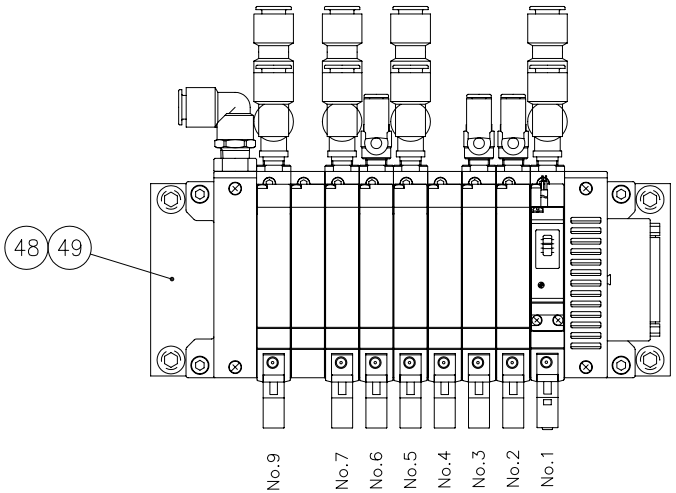

DETAIL H

No.	Name	Symbol	
1	Work Hold	YV6	
2	Striker (Outer)	YV8	
3	Striker (Inner)	YV9	
4	Index Clamp	YV36	
5	Index Pin	YV7	
6	Upper Work Hold Base	YV4	
7	Free Bearing Up/Down (F)	YV23	
9	Free Bearing Up/Down (C)	YV24	
11	Free Bearing Up/Down (R)	YV29	(Option)

6876985C

Index	Code	Parts Name	Drawing No.	Type	Maker	Q'ty	Note
1	71371423	Plastic Hose	P230242143	N2-4-10X8(Black)-0.6M	NITTA MOORE	1	
2	71371423	Plastic Hose	P230242091	N2-4-10X8(Black)-2.9M	NITTA MOORE	1	
3	74379378	Instant Fitting	P586604013	EUT10	NITTA MOORE	1	
4	71371423	Plastic Hose	P230242142	N2-4-10X8(Black)-7M	NITTA MOORE	1	
5	74379378	Instant Fitting	P586604013	EUT10	NITTA MOORE	1	
6	71371423	Plastic Hose	P230242142	N2-4-10X8(Black)-7M	NITTA MOORE	1	
7	74415489	Plastic Hose	P230242169	N2-4-10X8(Blue)-2M	NITTA MOORE	1	
8	74379378	Instant Fitting	P586604013	EUT10	NITTA MOORE	1	
9	74415489	Plastic Hose	P230242166	N2-4-10X8(Blue)-1M	NITTA MOORE	2	
10	74415487	Plastic Hose	P230242170	N2-4-10X8(Red)-2M	NITTA MOORE	1	
11	74379378	Instant Fitting	P586604013	EUT10	NITTA MOORE	1	
12	74415487	Plastic Hose	P230242168	N2-4-10X8(Red)-1M	NITTA MOORE	2	
13	74415488	Plastic Hose	P230222166	N2-4-6X4(Red)-3M	NITTA MOORE	1	
14	74415492	Plastic Hose	P230222167	N2-4-6X4(Blue)-3M	NITTA MOORE	1	
15	74389812	Plastic Hose	P230222172	N2-4-6X4(Yellow)-3M	NITTA MOORE	1	
16	74415506	Plastic Hose	P230222173	N2-4-6X4(Green)-3M	NITTA MOORE	1	
17	74723043	Spiral Tube	P869108008	P-9-0.4M	SHIBAKEI	1	
18	74310420	Cable Band	P381058020	CV-175N	SHIBAKEI	2	
19	74415489	Plastic Hose	P230242169	N2-4-10X8(Blue)-2M	NITTA MOORE	1	

Index	Code	Parts Name	Drawing No.	Type	Maker	Q'ty	Note
20	74379378	Instant Fitting	P586604013	EUT10	NITTA MOORE	1	
21	74415489	Plastic Hose	P230242166	N2-4-10X8(Blue)-1M	NITTA MOORE	2	
22	74415487	Plastic Hose	P230242170	N2-4-10X8(Red)-2M	NITTA MOORE	1	
23	74379378	Instant Fitting	P586604013	EUT10	NITTA MOORE	1	
24	74415487	Plastic Hose	P230242168	N2-4-10X8(Red)-1M	NITTA MOORE	2	
25	74415492	Plastic Hose	P230222153	N2-4-6X4(Blue)-6M	NITTA MOORE	1	
26	74338327	Instant Fitting	P586604012	EUT6	NITTA MOORE	1	
27	74415492	Plastic Hose	P230222157	N2-4-6X4(Blue)-1M	NITTA MOORE	2	
28	74415488	Plastic Hose	P230222154	N2-4-6X4(Red)-6M	NITTA MOORE	1	
29	74338327	Instant Fitting	P586604012	EUT6	NITTA MOORE	1	
30	74415488	Plastic Hose	P230222158	N2-4-6X4(Red)-1M	NITTA MOORE	2	
31	71371426	Plastic Hose	P230222078	N2-4-6X4(Black)-3M	NITTA MOORE	1	
32	74338327	Instant Fitting	P586604012	EUT6	NITTA MOORE	1	
33	71371426	Plastic Hose	P230222063	N2-4-6X4(Black)-1.8M	NITTA MOORE	2	
34	74379378	Instant Fitting	P586604013	EUT10	NITTA MOORE	1	
35	74562784	Instant Fitting	P586654002	ER6-10	NITTA MOORE	1	
36	71371426	Plastic Hose	P230222133	N2-4-6X4(Black)-2.2M	NITTA MOORE	1	
37	74379378	Instant Fitting	P586604013	EUT10	NITTA MOORE	1	
38	71371423	Plastic Hose	P230242094	N2-4-10X8(Black)-4M	NITTA MOORE	1	

Index	Code	Parts Name	Drawing No.	Type	Maker	Q'ty	Note
39	74415518	Brake SOL	7832986	VP342-5DZ-02A-F-X258	SMC	1	
40	79564804	Hex Soc Cap Screw	P330230006	M8X20		2	
41	71371426	Plastic Hose	P230222078	N2-4-6X4(Black)-3M	NITTA MOORE	1	
42	74338327	Instant Fitting	P586604012	EUT6	NITTA MOORE	1	
43	71371426	Plastic Hose	P230222063	N2-4-6X4(Black)-1.8M	NITTA MOORE	2	
44	74419248	Air Control Unit	7831600		SMC	1	
45	74569858	Stud	6812934	H22		3	
46	86280603	Socket Set Screw	P330550042	M8X25(Flat-end)		3	
47	79565423	Hex Soc Cap Screw	P330230004	M8X15		3	
48	74418421	Solenoid Valve	7831535	VV5Q21-09	SMC	1	
49	79568702	Hex Soc Cap Screw	P330230008	M8X30		4	
50	74418422	Clamp Solenoid Bracket	6876982			1	
51	86213032	Hex Soc Cap Screw	P330250007	M12X40		2	
52	74418423	Clamp Solenoid Assy	7831576	VP342-5DZ-02A-F-X287	SMC	1	
53	79565423	Hex Soc Cap Screw	P330230004	M8X15		2	
54	74419124	Cable Y-4	6877632			1	
55	74419125	Cable Y-5	6877633			1	
56	74418424	Unit Cover	6876983			1	
57	79565423	Hex Soc Cap Screw	P330230004	M8X15		4	

Index	Code	Parts Name	Drawing No.	Type	Maker	Q'ty	Note
58	86610326	Spring Washer	P336050006	8		4	
59	79567109	Washer	P336000006	8(Regular Round)		4	
60	71371423	Plastic Hose	P230242142	N2-4-10X8(Black)-7M	NITTA MOORE	1	

From Serial No.36102001 and after

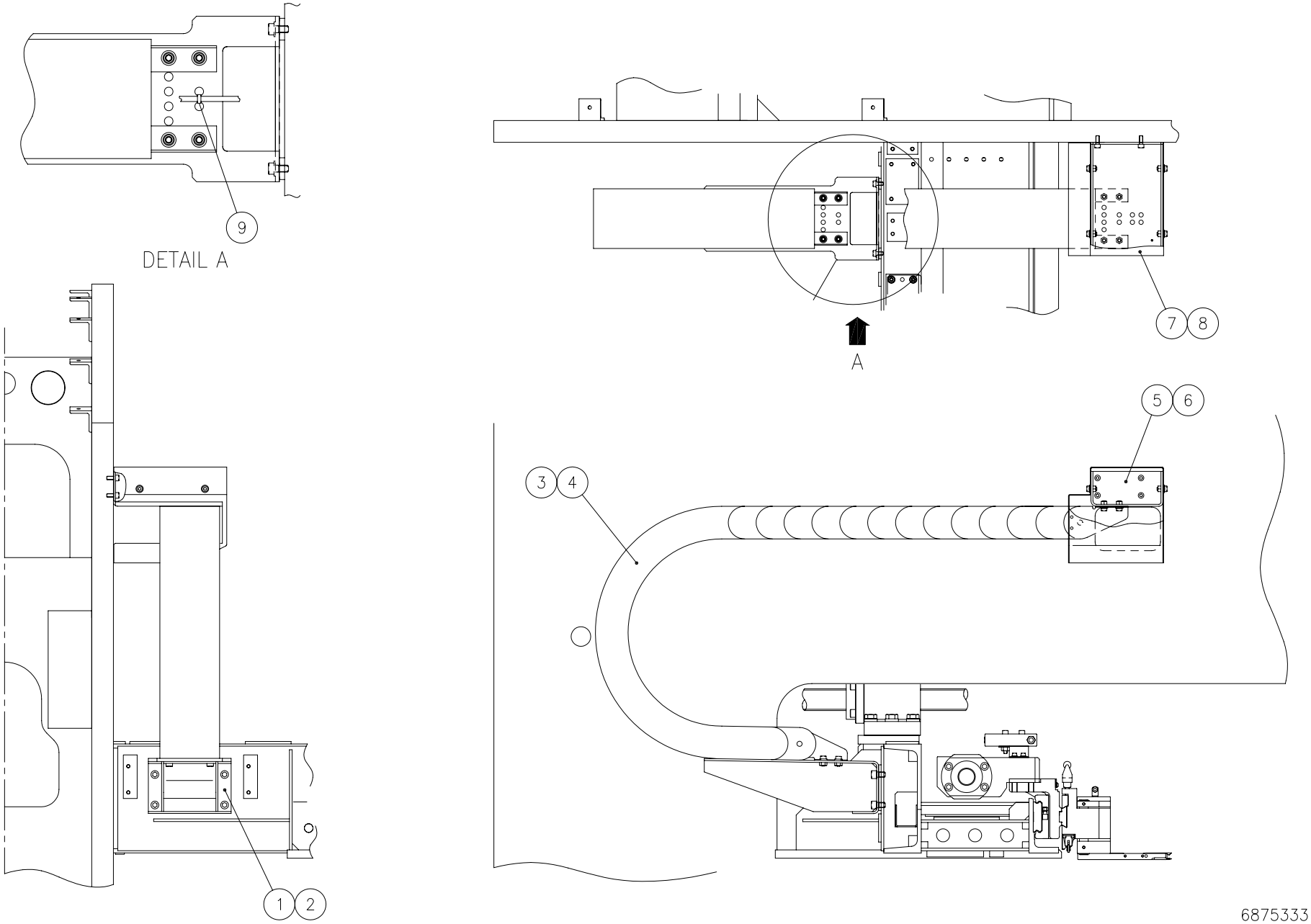

Unit No. 40

Piping(2) From Serial No.36102001 and after

Index	Code	Parts Name	Drawing No.	Type	Maker	Q'ty	Note
1	74415945	Bracket (Under)	6826381 B			1	
2	86610808	Hex Soc Cap Screw	P330250003	M12X20		4	
3	74578832	Runner Flex	7830895			1	
4	74382078	Flange Socket Bolt	P330468006	M8X15	NISSAN NEJI	8	
5	74415522	Duct Bracket (Upper)	6828734			1	
6	79564804	Hex Soc Cap Screw	P330230006	M8X20		4	
7	74415523	Duct Wiring Cover (Upper)	6828735			1	
8	74382078	Flange Socket Bolt	P330468006	M8X15	NISSAN NEJI	4	
9	74307822	Cable Band	P381058013	CV-200N	SHIBAKEI	5	

From Serial No.36102001 and after

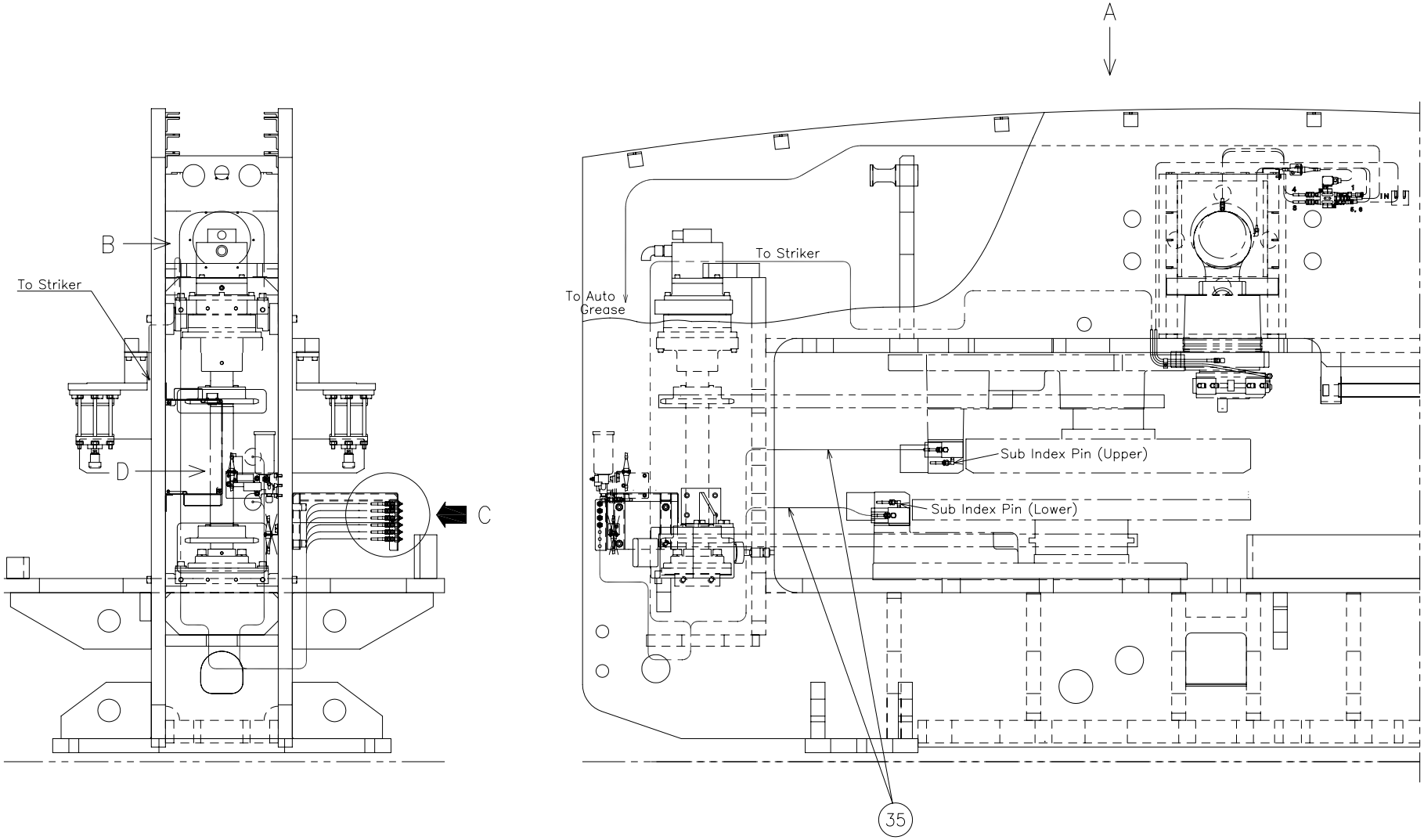

6877740A

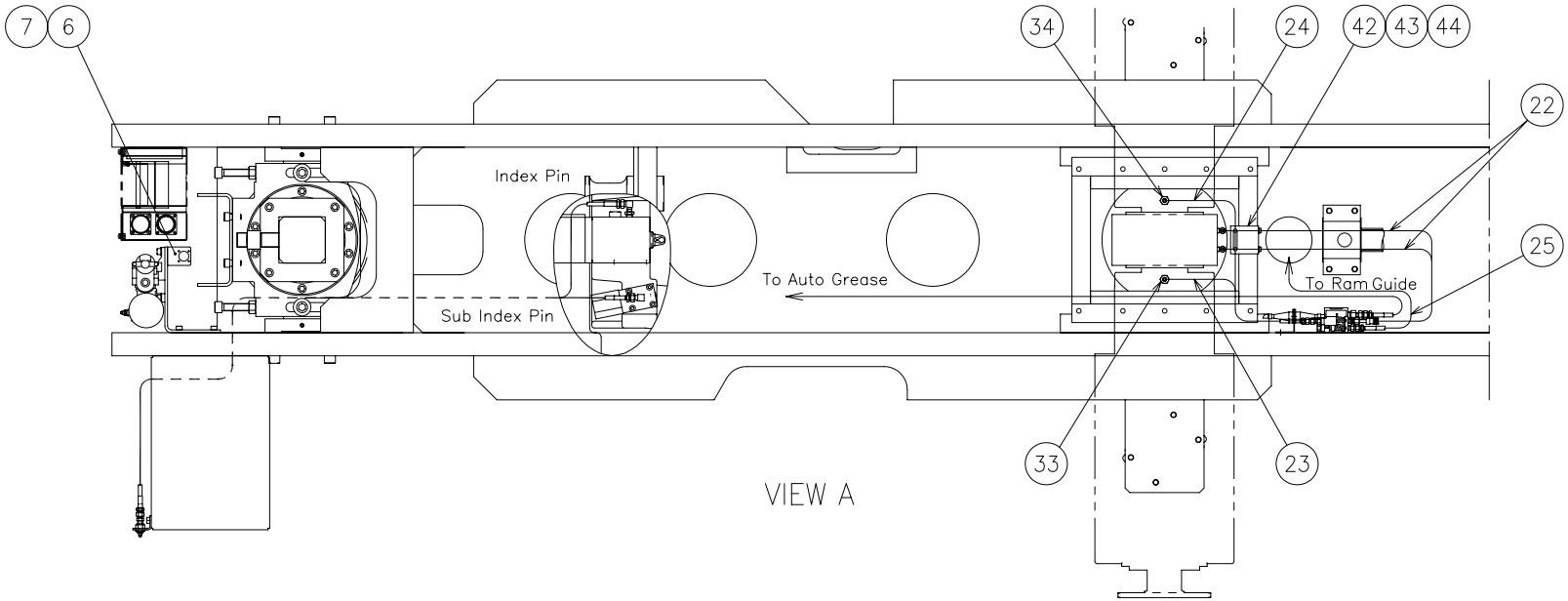
7
6
34
24
42
43
44
22
25
Index Pin
To Auto Grease
To Ram Guide
Sub Index Pin
33
23
VIEW A

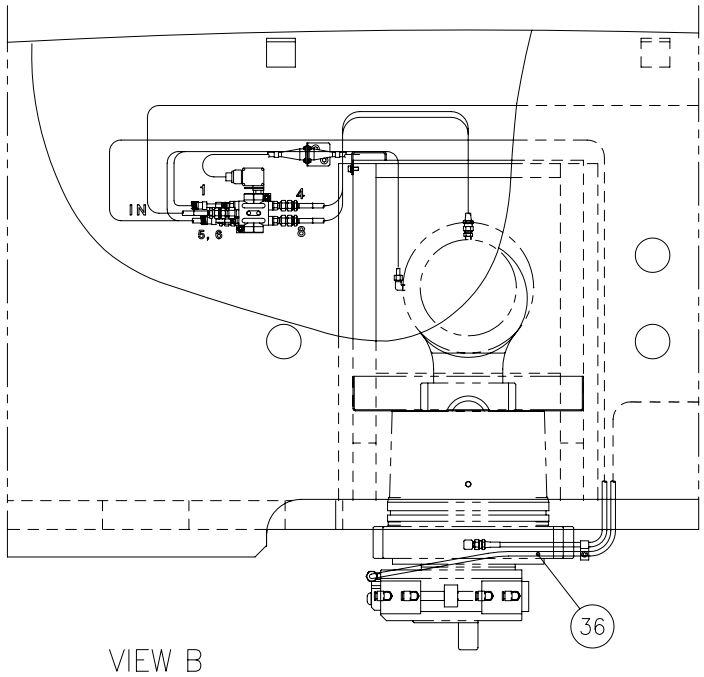
IN
1
4
5, 6
8
36
VIEW B

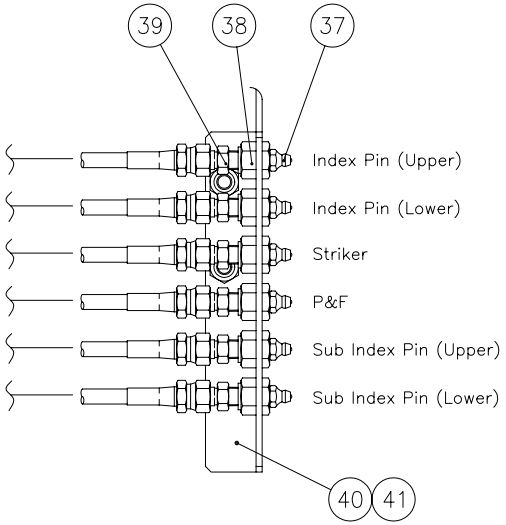
39
38
37
Index Pin (Upper)
Index Pin (Lower)
Striker
P&F
Sub Index Pin (Upper)
Sub Index Pin (Lower)
40
41
DETAIL C

6877740A

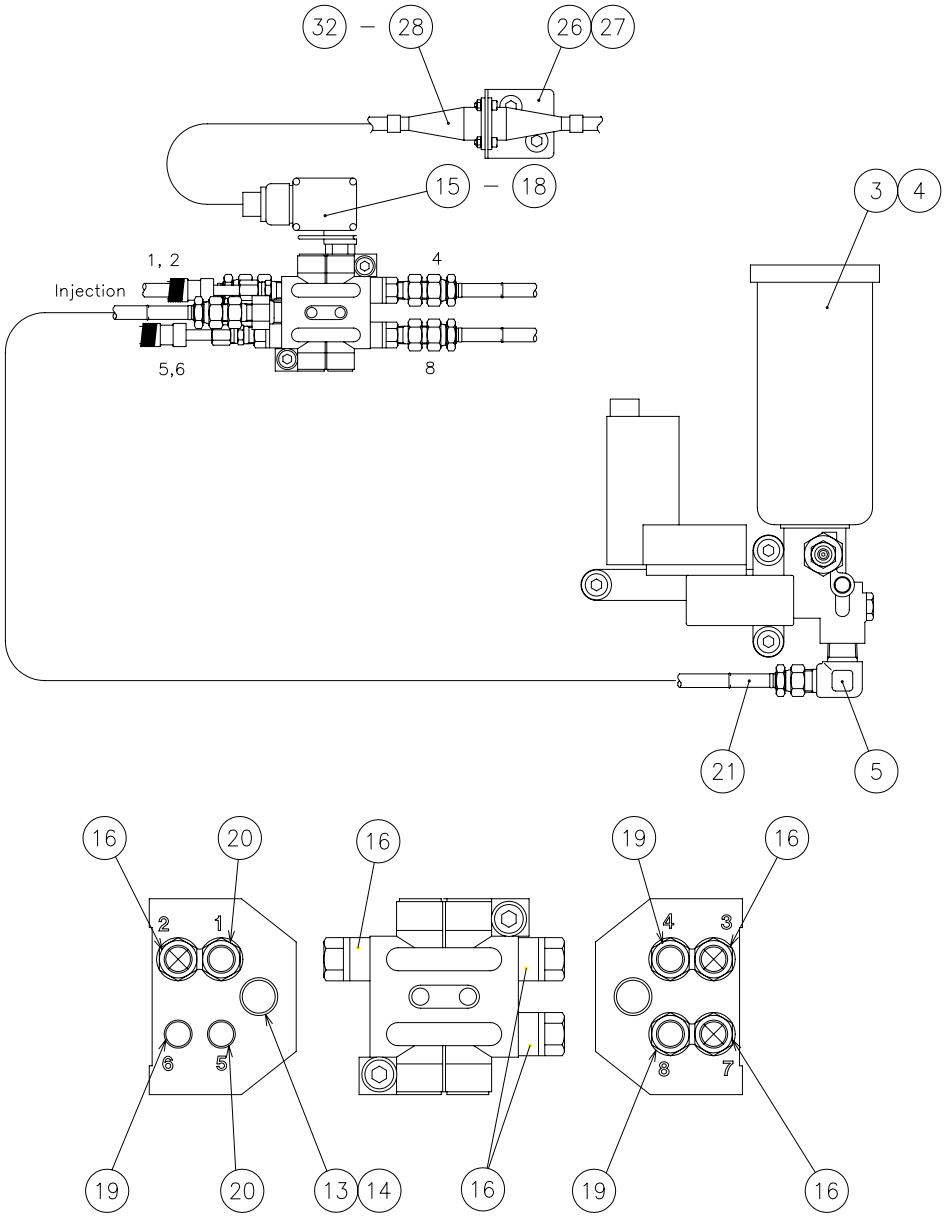

System Diagram

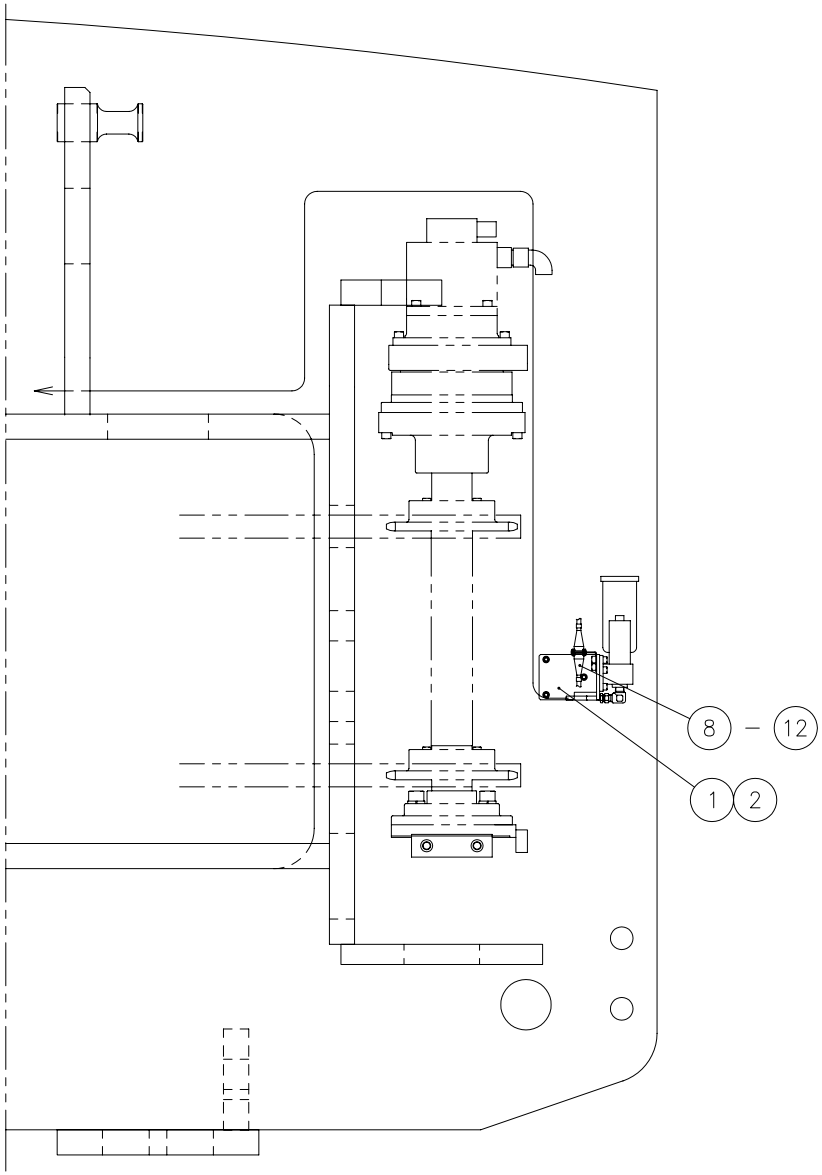

VIEW D

6877740A

From Serial No.36102001 and after

Index	Code	Parts Name	Drawing No.	Type	Maker	Q'ty	Note
1	74419126	Bracket (Grease Pump)	6877742 A			1	
2	79564804	Hex Soc Cap Screw	P330230006	M8X20		3	
3	75429191	Grease Pump	7834089	SK-505BMA-04	IHI	1	
4	79565423	Hex Soc Cap Screw	P330230004	M8X15		3	
5	74569150	Hose Adapter	P589222368	1033-PT1/4-PF1/8	Yokohama Rubber	1	
6	74310948	Cable Bracket	6502982 A			1	
7	79565423	Hex Soc Cap Screw	P330230004	M8X15		2	
8	74565182	Plastic R Connector	P862032012	206061-1	AMP	1	
9	75419126	Plug Type Terminal	P862142012	66103-2	AMP	2	
10	74565183	Cable Clamp	P862182001	206062-1	AMP	1	Accessory For Connector
11	86213001	Hex Soc Cap Screw	P330200003	M3X10		4	
12	74307616	Nut	P332000001	M3		4	
13	74722993	Hose Adapter	P589223028	8001RG02	BRIDGESTON	1	
14	74415533	Hose Adapter	P589222280	2081-PT1/4-1/8	Yokohama Rubber	1	
15	74418426	Distributer Switch Valve	P560305015	U-8M(with Micro Swtch)	IHI	1	
16	74415535	Lubricating Pipe Fitting	P560495001	AU-15	IHI	3	
17	79565422	Hex Soc Cap Screw	P330220011	M6X25		2	
18	79564311	Spring Washer	P336050005	6		2	
19	74722993	Hose Adapter	P589223028	8001RG02	BRIDGESTON	3	

From Serial No.36102001 and after

Index	Code	Parts Name	Drawing No.	Type	Maker	Q'ty	Note
20	74722995	Lubricating Pipe Fitting	P589505002	RK865621	IHI	2	
21	74418427	Oil Hose Assy	P220463040	KA02-F-6M	BRIDGESTON	1	
22	74415188	Nozzle Pipe	P560472030	FH6-825	LUBE	2	
23	74310967	Lubricating Hose (4)	6504213	K5-02-NPF-0.84M		1	
24	74721995	Lubricating Hose (5)	6504214	K5-02-NPF-1.145M		1	
25	74415536	Lubricating Hose (D)	6591547			1	
26	74310948	Cable Bracket	6502982 A			1	
27	79565423	Hex Soc Cap Screw	P330230004	M8X15		2	
28	74565182	Plastic R Connector	P862032012	206061-1	AMP	1	
29	75419126	Plug Type Terminal	P862142012	66103-2	AMP	2	
30	74565183	Cable Clamp	P862182001	206062-1	AMP	1	Accessory For Connector
31	86213001	Hex Soc Cap Screw	P330200003	M3X10		4	
32	74307616	Nut	P332000001	M3		4	
33	74722993	Hose Adapter	P589223028	8001RG02	BRIDGESTON	1	
34	74722993	Hose Adapter	P589223028	8001RG02	BRIDGESTON	1	
35	74418428	Oil Hose Assy	P220432060	N173-02-1004-3.0M	Yokohama Rubber	2	
36	74418429	Oil Hose Assy	P220432059	N173-02-1004-5.1M	Yokohama Rubber	1	
37	74304826	Grease Nipple	P560600004	A-PT1/8		4	
38	36525551	Bite Type Pipe Fitting	P585555001	PF-1/8-1/8-BS	JUNKOSHA	4	

From Serial No.36102001 and after

Index	Code	Parts Name	Drawing No.	Type	Maker	Q'ty	Note
39	74569965	Hose Adapter	P589222214	1013-PT1/8-PF1/8	Yokohama Rubber	4	
40	79565423	Hex Soc Cap Screw	P330230004	M8X15		2	
41	74418430	Lubricating Bracket	6875345			1	
42	74415540	Stopper Bracket	6871151			1	
43	74731367	Flange Socket Bolt	P330468026	M6X12	NISSAN NEJI	2	
44	74571460	Cable Band	P381058056	SKB-3M	KITAGAWA	1	
45		Lubricating Oil	P238025010	1L	AMADA	2	List Only
46		Grease	P238045002	EP-NO.0-1L	AMADA	1	List Only
47		Grease	P238045005	EP-NO.2-1L	AMADA	1	List Only
48		Rust Preventive Oil	P238108004	P601-1L	YUSHIRO Chemical	3	List Only
49		Rust Preventive Oil	P238104003	PS-1L	IDEMITSU	2	List Only
50		Rust Preventive Oil	P238108003	SOLVEST-550-4L	STT	1	List Only

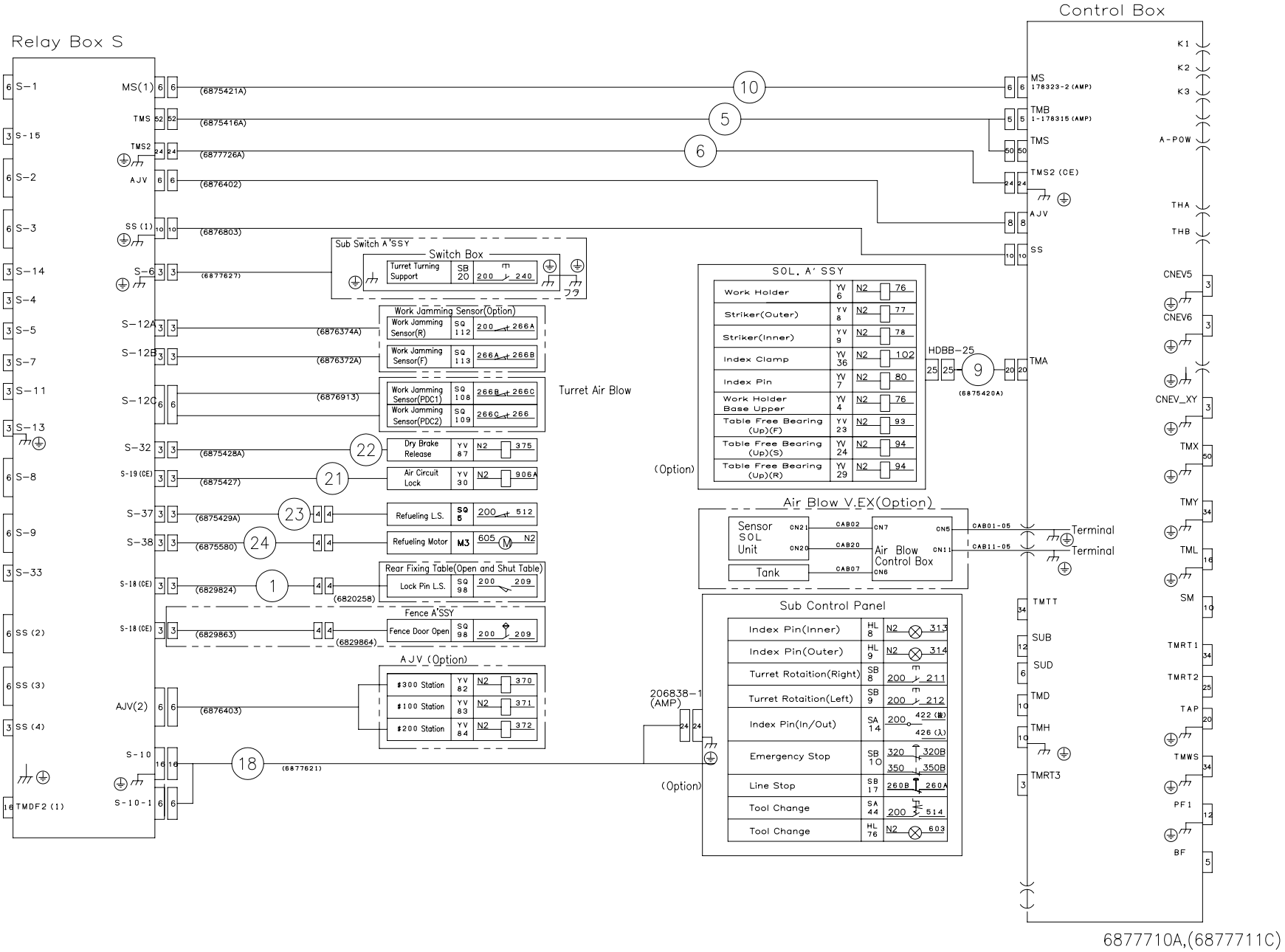
Relay Box S
Control Box
S-1
S-15
S-2
S-3
S-14
S-4
S-5
S-7
S-11
S-13
S-8
S-9
S-33
SS (2)
SS (3)
SS (4)
TMDF2 (1)
MS(1)
TMS
TMS2
AJV
SS (1)
S-6
S-12A
S-12B
S-12C
S-32
S-19 (CE)
S-37
S-38
S-18 (CE)
AJV(2)
S-10
S-10-1
(6875421A)
(6875416A)
(6877726A)
(6876402)
(6876803)
(6877627)
(6876374A)
(6876372A)
(6876913)
(6875428A)
(6875427)
(6875429A)
(6875580)
(6829824)
(6820258)
(6829863)
(6829864)
(6876403)
(6877621)
(6875420A)
Sub Switch A'SSY
Switch Box
Turret Turning Support
Work Jamming Sensor(Option)
Work Jamming Sensor(R)
Work Jamming Sensor(F)
Work Jamming Sensor(PDC1)
Work Jamming Sensor(PDC2)
Turret Air Blow
Dry Brake Release
Air Circuit Lock
Refueling L.S.
Refueling Motor
Rear Fixing Table(Open and Shut Table)
Lock Pin L.S.
Fence A'SSY
Fence Door Open
AJV (Option)
#300 Station
#100 Station
#200 Station
SOL. A' SSY
Work Holder
Striker(Outer)
Striker(Inner)
Index Clamp
Index Pin
Work Holder Base Upper
Table Free Bearing (Up)(F)
Table Free Bearing (Up)(S)
Table Free Bearing (Up)(R)
(Option)
HDBB-25
Air Blow V.EX(Option)
Sensor SOL Unit
Tank
Air Blow Control Box
Sub Control Panel
Index Pin(Inner)
Index Pin(Outer)
Turret Rotaition(Right)
Turret Rotaition(Left)
Index Pin(In/Out)
Emergency Stop
Line Stop
Tool Change
206838-1 (AMP)
MS 178323-2 (AMP)
TMB 1-178315 (AMP)
TMS2 (CE)
TMA
Terminal
TMTT
SUB
SUD
TMD
TMH
TMRT3
K1
K2
K3
A-POW
THA
THB
CNEV5
CNEV6
CNEV_XY
TMX
TMY
TML
SM
TMRT1
TMRT2
TAP
TMWS
PF1
BF
6877710A,(6877711C)

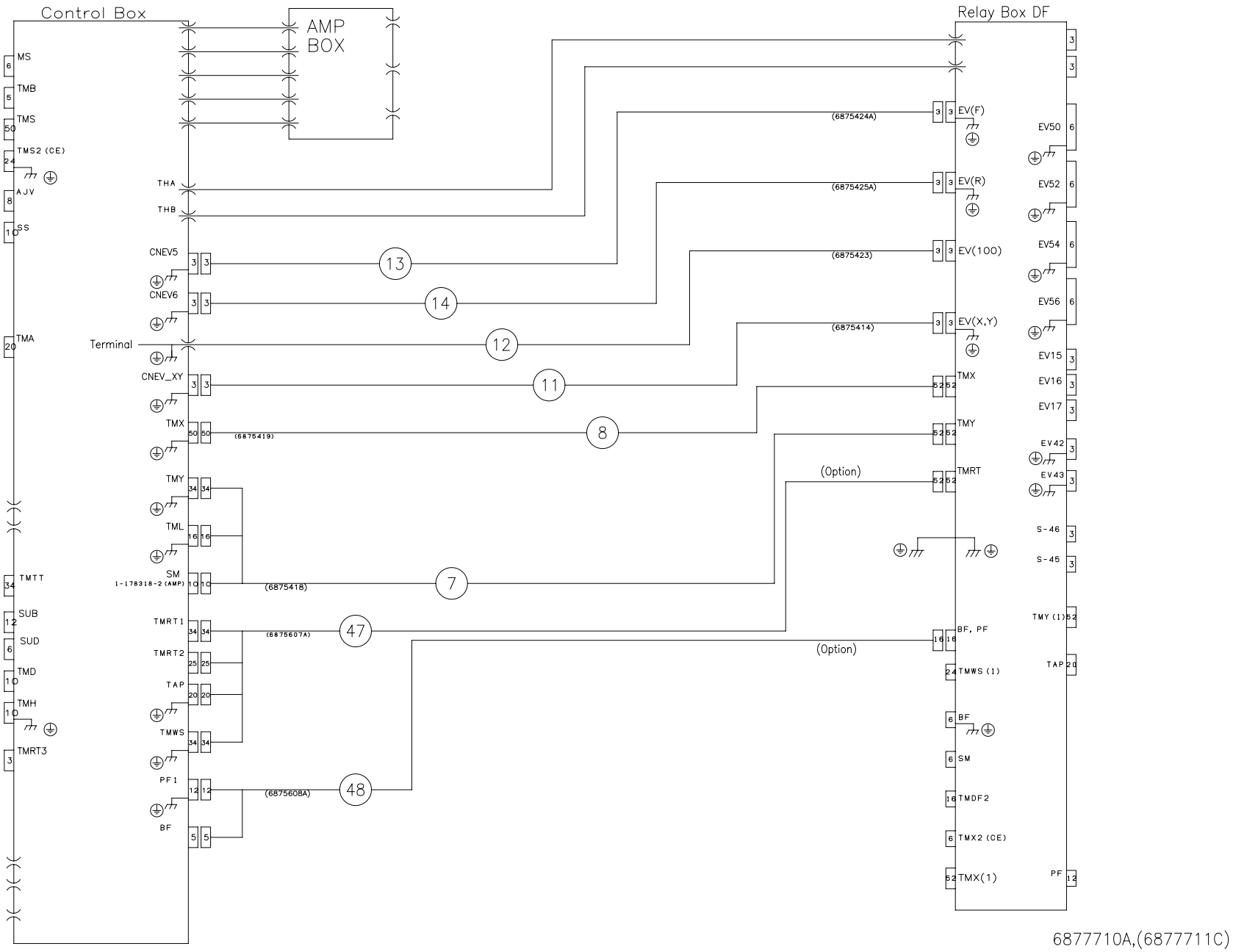
Control Box
AMP BOX
Relay Box DF
MS
TMB
TMS
TMS2 (CE)
AJV
SS
TMA
TMTT
SUB
SUD
TMD
TMH
TMRT3
THA
THB
CNEV5
CNEV6
Terminal
CNEV_XY
TMX
TMY
TML
SM
1-178318-2(AMP)
TMRT1
TMRT2
TAP
TMWS
PF1
BF
(6875424A)
(6875425A)
(6875423)
(6875414)
(6875419)
(6875418)
(6875607A)
(6875608A)
13
14
12
11
8
7
47
48
EV(F)
EV(R)
EV(100)
EV(X,Y)
TMX
TMY
TMRT
(Option)
BF, PF
TMWS(1)
BF
SM
TMDF2
TMX2(CE)
TMX(1)
EV50
EV52
EV54
EV56
EV15
EV16
EV17
EV42
EV43
S-46
S-45
TMY(1)
TAP
PF
6877710A,(6877711C)

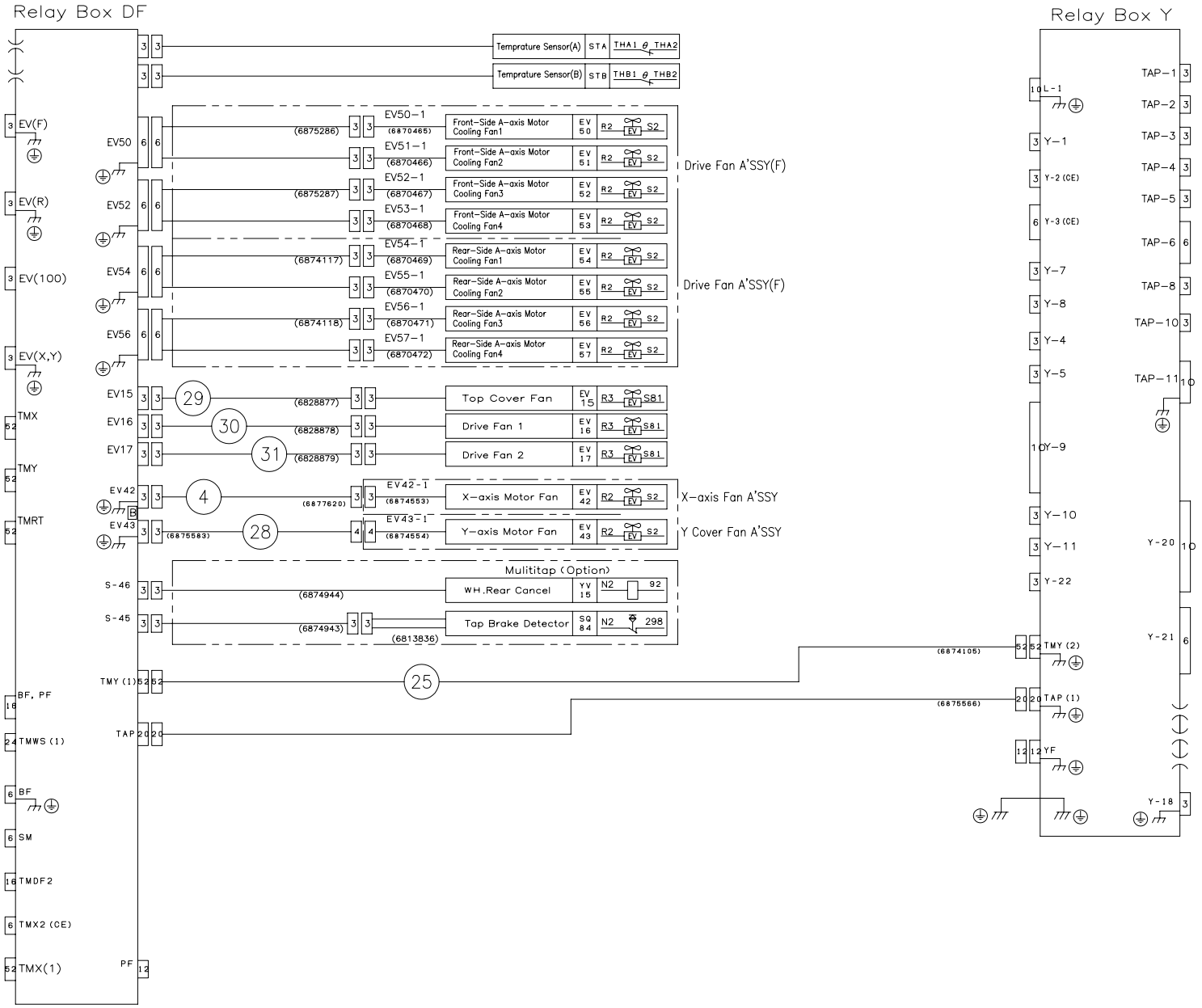
Relay Box DF
Relay Box Y
Temprature Sensor(A)
Temprature Sensor(B)
Front-Side A-axis Motor Cooling Fan1
Front-Side A-axis Motor Cooling Fan2
Front-Side A-axis Motor Cooling Fan3
Front-Side A-axis Motor Cooling Fan4
Rear-Side A-axis Motor Cooling Fan1
Rear-Side A-axis Motor Cooling Fan2
Rear-Side A-axis Motor Cooling Fan3
Rear-Side A-axis Motor Cooling Fan4
Drive Fan A'SSY(F)
Top Cover Fan
Drive Fan 1
Drive Fan 2
X-axis Motor Fan
Y-axis Motor Fan
X-axis Fan A'SSY
Y Cover Fan A'SSY
Mulititap (Option)
WH.Rear Cancel
Tap Brake Detector
6877710A,(6877711C)

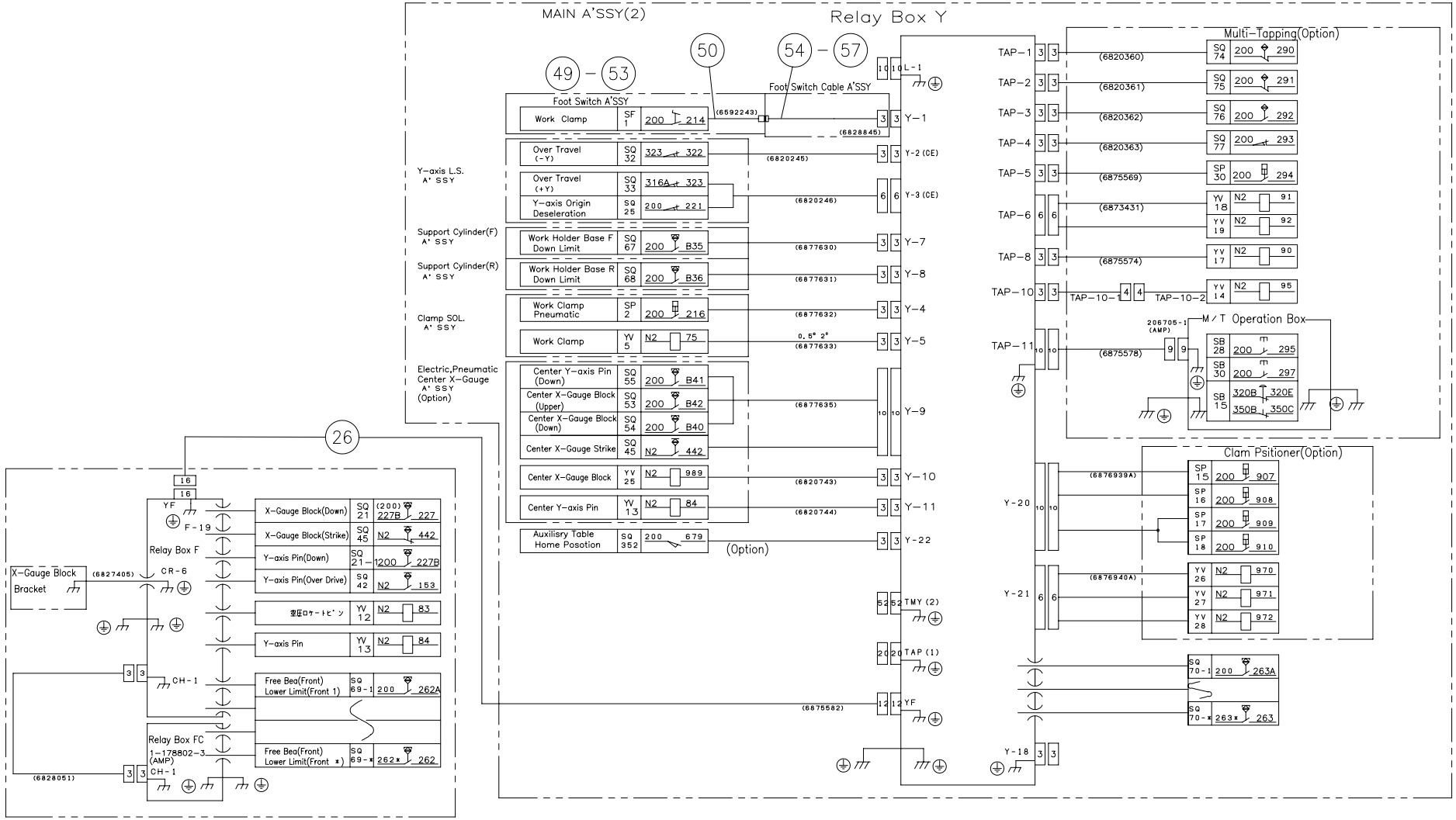

6877710A,(6877711C)

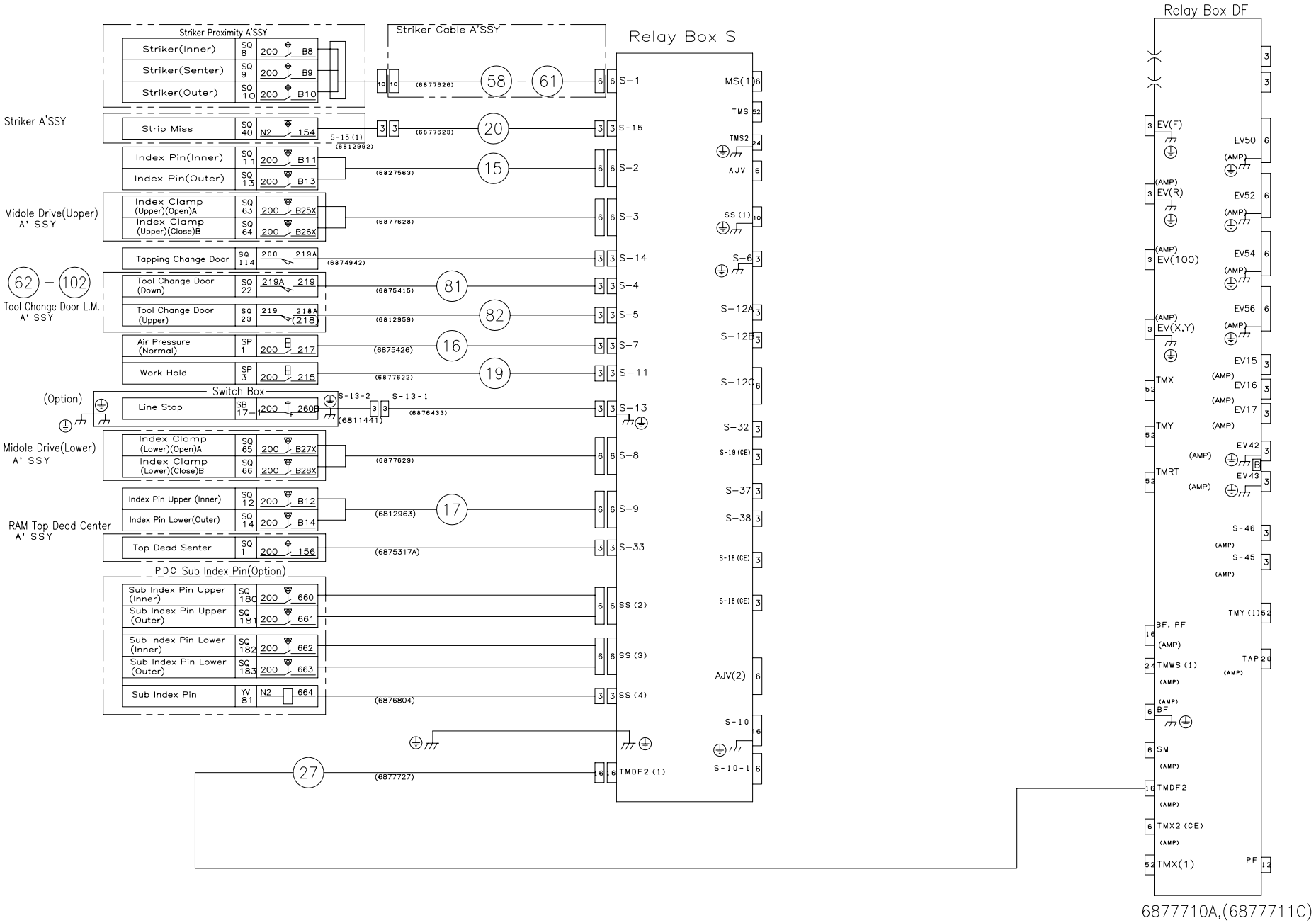
Striker Proximity A'SSY
Striker(Inner)
Striker(Senter)
Striker(Outer)
Striker A'SSY
Strip Miss
Index Pin(Inner)
Index Pin(Outer)
Midole Drive(Upper) A' SSY
Index Clamp (Upper)(Open)A
Index Clamp (Upper)(Close)B
Tapping Change Door
Tool Change Door L.M. A' SSY
Tool Change Door (Down)
Tool Change Door (Upper)
Air Pressure (Normal)
Work Hold
(Option)
Switch Box
Line Stop
Midole Drive(Lower) A' SSY
Index Clamp (Lower)(Open)A
Index Clamp (Lower)(Close)B
RAM Top Dead Center A' SSY
Index Pin Upper (Inner)
Index Pin Lower(Outer)
Top Dead Senter
PDC Sub Index Pin(Option)
Sub Index Pin Upper (Inner)
Sub Index Pin Upper (Outer)
Sub Index Pin Lower (Inner)
Sub Index Pin Lower (Outer)
Sub Index Pin
Striker Cable A'SSY
Relay Box S
Relay Box DF
6877710A,(6877711C)

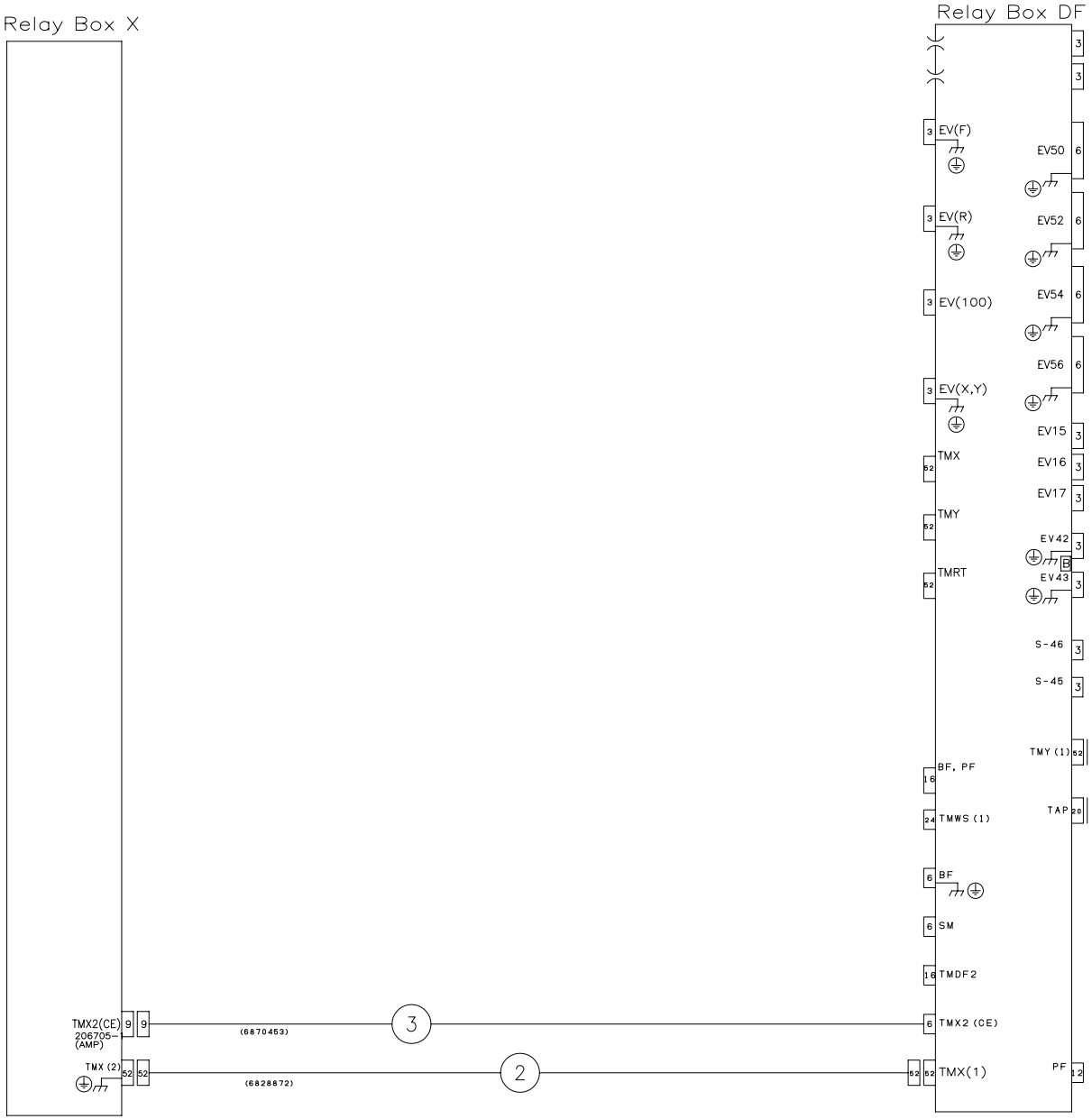

6877710A,(6877711C)

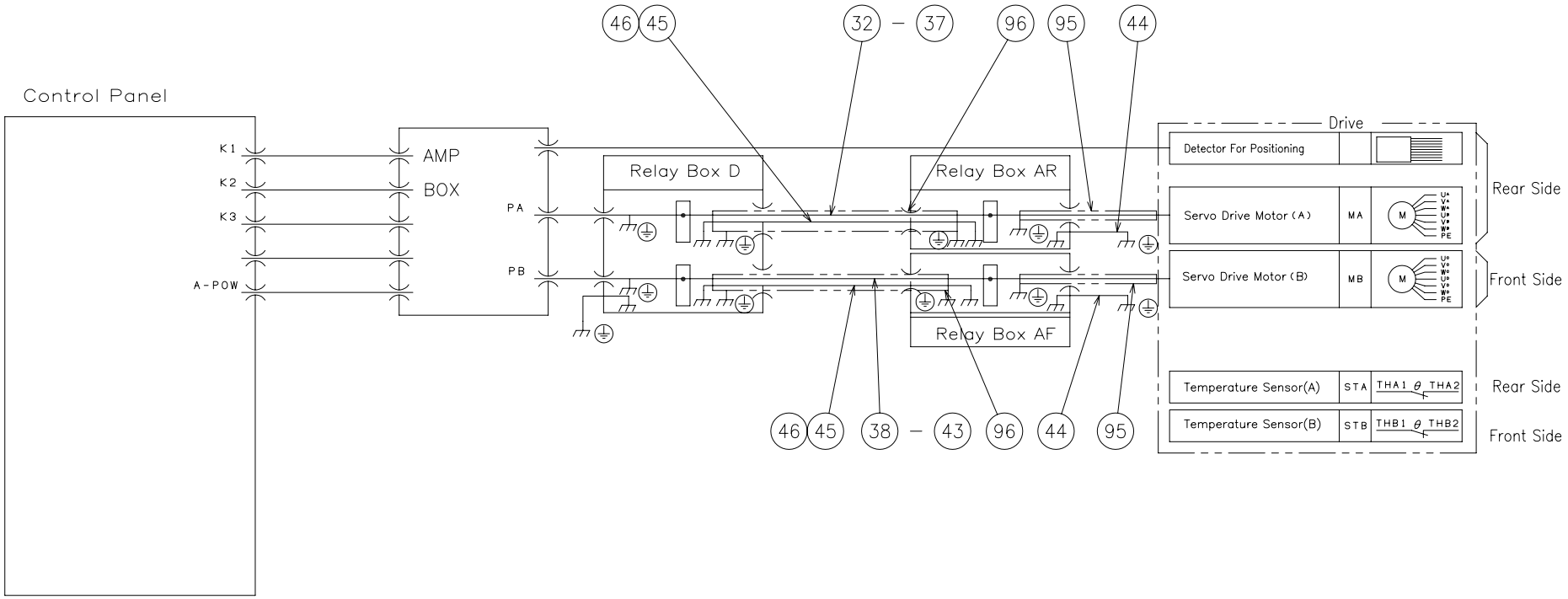

6877710A,(6877711C)

Index	Code	Parts Name	Drawing No.	Type	Maker	Q'ty	Note
1	74418431	Cable S-18 (CE)	6829824			1	
2	74415572	Cable TMX(1)	6828872			1	
3	74415551	Cable TMX2 (CE)	6870453 A			1	
4	74419127	Cable EV42	6877620			1	
5	74418433	Cable TMS	6875416 A			1	
6	74418434	Cable TMS2(CE)	6877726 A			1	
7	74418435	Cable TMY	6875418			1	
8	74418436	Cable TMX	6875419			1	
9	74418437	Cable TMA	6875420 A			1	
10	74418438	Cable MS	6875421 A			1	
11	74418439	Cable CNEV(X,Y)	6875414			1	
12	74418440	Cable EV(100)	6875423			1	
13	74418441	Cable EV(F)	6875424 A			1	
14	74418442	Cable EV(R)	6875425 A			1	
15	74415560	Cable S-2	6827563			1	
16	74418443	Cable S-7	6875426			1	
17	74569986	Cable S-9	6812963			1	
18	74419128	Cable S-10	6877621			1	
19	74419129	Cable S-11	6877622			1	

Index	Code	Parts Name	Drawing No.	Type	Maker	Q'ty	Note
20	74419130	Cable S-15	6877623			1	
21	74418444	Cable S-19 (CE)	6875427			1	
22	74419131	Cable S-32	6875428 A			1	
23	74419132	Cable S-37	6875429 A			1	
24	74418447	Cable S-38	6875580			1	
25	74418448	Cable TMY(1)	6874105			1	
26	74418449	Cable YF	6875582			1	
27	74418450	Cable TMDF2(CE)	6877727			1	
28	74418451	Cable EV43	6875583			1	
29	74419499	Cable EV15	6875747			1	
30	74419501	Cable EV16	6875748			1	
31	74419502	Cable EV17	6875749			1	
32	74418452	A-axis Motor Cable (UA)	6878051			1	
33	74418453	A-axis Motor Cable (VA)	6878052			1	
34	74418454	A-axis Motor Cable (WA)	6878053			1	
35	74418455	A-axis Motor Cable (UB)	6878059			1	
36	74418456	A-axis Motor Cable (VB)	6878062			1	
37	74418457	A-axis Motor Cable (WB)	6878063			1	
38	74418458	A-axis Motor Cable (UC)	6878064			1	

Index	Code	Parts Name	Drawing No.	Type	Maker	Q'ty	Note
39	74418459	A-axis Motor Cable (VC)	6878065			1	
40	74418460	A-axis Motor Cable (WC)	6878066			1	
41	74418461	A-axis Motor Cable (UD)	6878067			1	
42	74418462	A-axis Motor Cable (VD)	6878068			1	
43	74418463	A-axis Motor Cable (WD)	6878069			1	
44	74418464	Ground Lead Cable (A)	6878056			2	
45	74418465	Ground Lead Cable (B)	6878057			2	
46	74418466	Ground Cable (C)	6878058			2	
47	74418472	Cable TMRT	6875607 A			1	
48	74418473	Cable BF,PF	6875608 A			1	
49	74383889	Foot Switch	P826108001	XPE-M510	SCHNEIDER	1	
50	74383888	Foot Switch Cable	6592243 A			1	
51	74383748	Accessory For Limit Switch	P828108004	DE9-PL116044	SCHNEIDER	1	
52	74383746	Washer	P336238037	DE9-PL116043	SCHNEIDER	1	
53	74380424	Metallic Connector	P860002002	NCS-253-PM	NANAHOSHI Electric	1	
54	74415963	Cable Y-1	6828845			1	
55	74386689	Flat Head Bolt	P334520041	M3X6		3	
56	74307030	Connector Setting Plate	6018282			1	
57	79564305	Hex Soc Cap Screw	P330220006	M6X15		2	

Index	Code	Parts Name	Drawing No.	Type	Maker	Q'ty	Note
58	74419133	Cable S-1	6877626			1	
59	74570051	Pan Head Screw with Washer	P334200109	M3X10(Chromate P-4)		4	
60	74578833	Connector Bracket	6532844 A			1	
61	79565423	Hex Soc Cap Screw	P330230004	M8X15		2	
62	74419249	Key Bracket (Upper)	6877992			1	
63	79565201	Hex Soc Cap Screw	P330220004	M6X12		2	
64	74417120	Safety Switch	P826163006	LJS-PA792	YAMATAKE	1	
65	79570917	Hex Soc Cap Screw	P330200024	M4X35		2	
66	74417122	Accessory (for Safety Switch)	P826173001	PA4-M2B	YAMATAKE	1	
67	74419250	LS Bracket (Upper)	6878031			1	
68	74731367	Flange Socket Bolt	P330468026	M6X12	NISSAN NEJI	2	
69	74417121	Accessory (for Safety Switch)	P826173002	LJS-Z13	YAMATAKE	1	
70	76116106	Hex Soc Cap Screw	P330200025	M4X40		2	
71	79573507	Spring Washer	P336050003	4		2	
72	71513636	Washer	P336000092	4(Regular Round)		2	
73	74300392	LS Bracket	6503888			1	
74	74731367	Flange Socket Bolt	P330468026	M6X12	NISSAN NEJI	2	
75	74300824	Limit Switch	P828008001	AT0-11-1-ZB	MURA Electric	1	
76	74569526	Accessory For Limit Switch	P828108007	V-M20	MURA Electric	1	

Index	Code	Parts Name	Drawing No.	Type	Maker	Q'ty	Note
77	79570917	Hex Soc Cap Screw	P330200024	M4X35		2	
78	74300393	Key Bracket	6503887			1	
79	74731367	Flange Socket Bolt	P330468026	M6X12	NISSAN NEJI	2	
80	76400229	Flat Head Bolt	P334520003	M4X12		2	
81	74418469	Cable S-4	6875415			1	
82	74569982	Cable S-5	6812959 A			1	
83	71513636	Washer	P336000092	4(Regular Round)		4	
84	74310948	Cable Bracket	6502982 A			1	
85	75428708	Flange Socket Bolt	P330468015	M6X10	NISSAN NEJI	2	
86	86213001	Hex Soc Cap Screw	P330200003	M3X10		4	
87	74307616	Nut	P332000001	M3		4	
88	79565423	Hex Soc Cap Screw	P330230004	M8X15		6	
89	74386505	Accessory For Connector	P862182002	900128-2	AMP	2	
90	74568662	Cable Band	P381058102	PLT2S	KITAGAWA	30	
91	74563689	Saddle For Conduct	P381017105	PZ0106(D6.2)	DAIWA DENGYO	11	
92	31183033	Hex Soc Cap Screw	P330220003	M6X10		11	
93	74568661	Cable Band	P381058101	TM3S25	KITAGAWA	1	
94	31183033	Hex Soc Cap Screw	P330220003	M6X10		1	
95	74418470	Shield Tube (A)	6878054			2	

Index	Code	Parts Name	Drawing No.	Type	Maker	Q'ty	Note
96	74418471	Shield Tube (B)	6878055			2	
97	74570022	Cable Support	6813067			1	
98	74570023	Cable Support Bracket	6813068			1	
99	79566121	Hex Soc Cap Screw	P330230007	M8X25		4	
100	74417164	Antivibration Rubber	7830994	HM-25	SHINWA	6	
101	79565419	Washer	P336000005	6(Regular Round)		6	
102	31183033	Hex Soc Cap Screw	P330220003	M6X10		6	

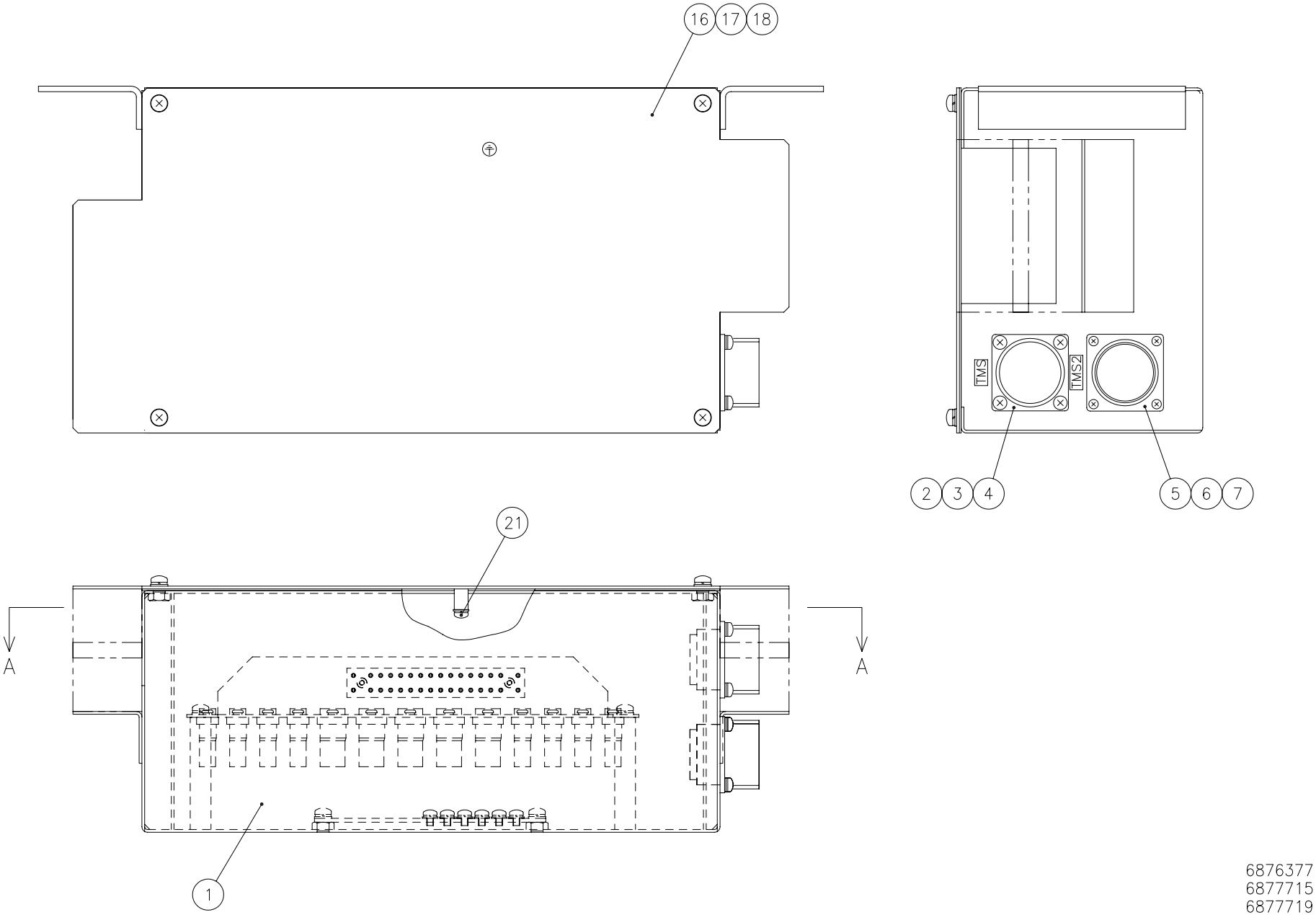

6876377
6877715
6877719

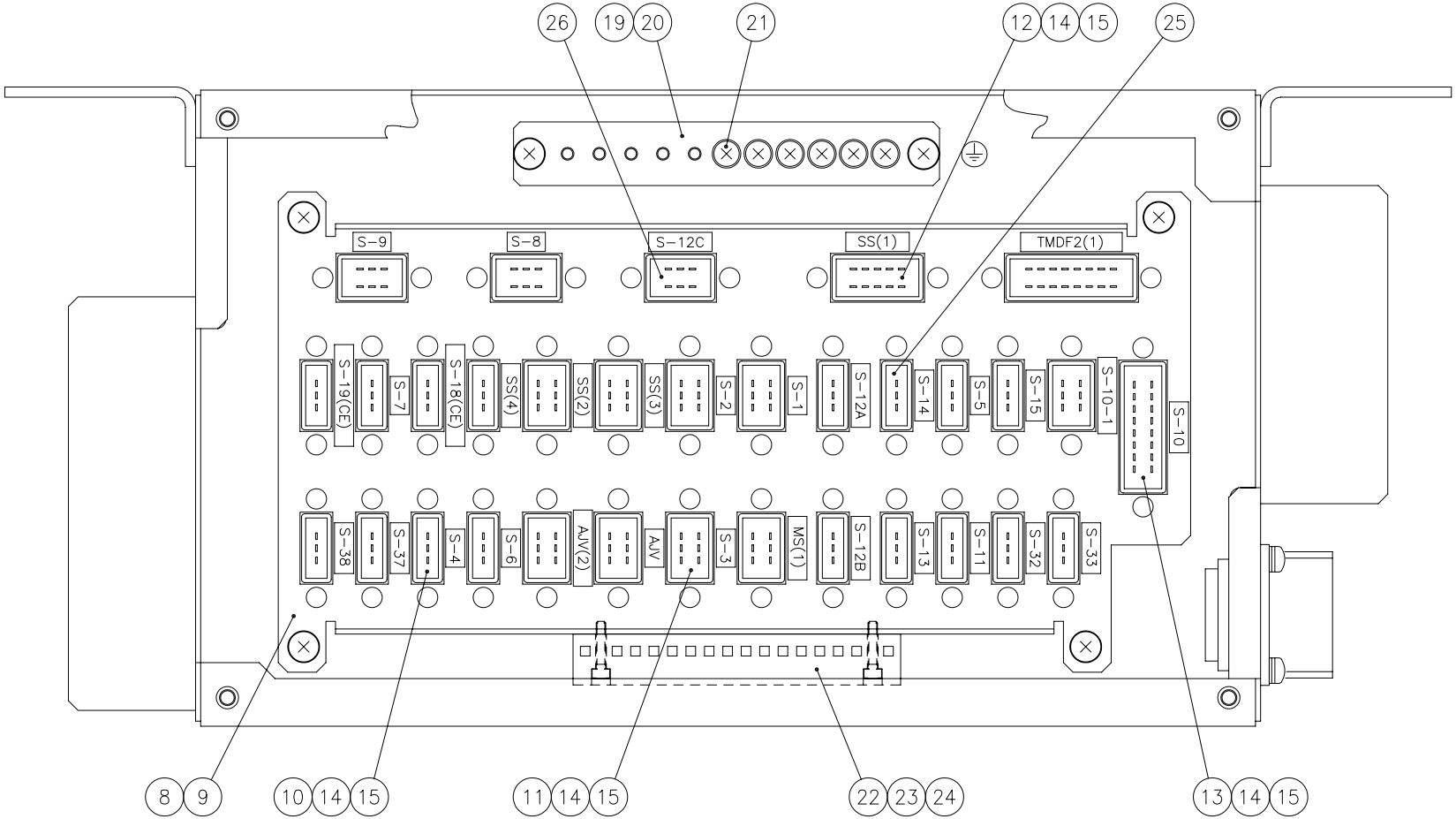

SECTION A–A

6876377
6877715
6877719

Index	Code	Parts Name	Drawing No.	Type	Maker	Q'ty	Note
1	74418474	Relay Box (S)	6875392			1	
2	74570029	Metallic Connector	P860003048	JL05-2A24-52APC-F0	JAE	1	52P
3	74386731	Accessory For Connector	P862188037	ST-JL05-20P-C1-100	JAE	52	
4	74570030	Pan Head Screw with Washer	P334200115	M4X10(Chromate P-4)		4	
5	74382195	Plastic R Connector	P862032008	206838-1	AMP	1	24P
6	74379484	Plug Type Terminal	P862142002	66099-2	AMP	23	
7	74569454	Pan Head Screw with Washer	P334200145	M3X8(Chromate P-4)		4	
8	74418475	Housing Plate (S)	6875393			1	
9	74570033	Pan Head Screw with Washer	P334200134	M5X10(Chromate P-4)		4	
10	74386502	Rectangle Connector	P862042073	1-178802-3	AMP	17	3P
11	74386501	Rectangle Connector	P862042068	178803-3	AMP	12	6P
12	74387014	Rectangle Connector	P862042069	178803-5	AMP	1	10P
13	74386500	Rectangle Connector	P862042071	178803-7	AMP	2	16P
14	74386503	Plug Type Terminal	P862142036	175289-5	AMP	133	
15	74386505	Accessory For Connector	P862182002	900128-2	AMP	64	
16	74418476	Relay Box Cover (S)	6875394			1	
17	74570033	Pan Head Screw with Washer	P334200134	M5X10(Chromate P-4)		4	
18	74418477	Packing (S)	6875395			1	
19	74418478	Ground Bar	6873034			1	

Index	Code	Parts Name	Drawing No.	Type	Maker	Q'ty	Note
20	74569456	Pan Head Screw with Washer	P334200133	M5X8(Chromate P-4)		2	
21	74569811	Pan Head Screw with Washer	P334200113	M4X6(Chromate P-4)		7	(Ground)
22	74569809	Block Terminal	P864008047	MK4/16KRG	WEIDMULLER	1	
23	74386496	Plug Type Terminal	P862148024	H0.75/15	WEIDMULLER	23	
24	79316101	Hex Soc Cap Screw	P330200006	M3X15		2	
25	74418479	Jumper Connector (S-14)	6874121			1	
26	74418480	Jumper Connector (S-12C)	6875589			1	

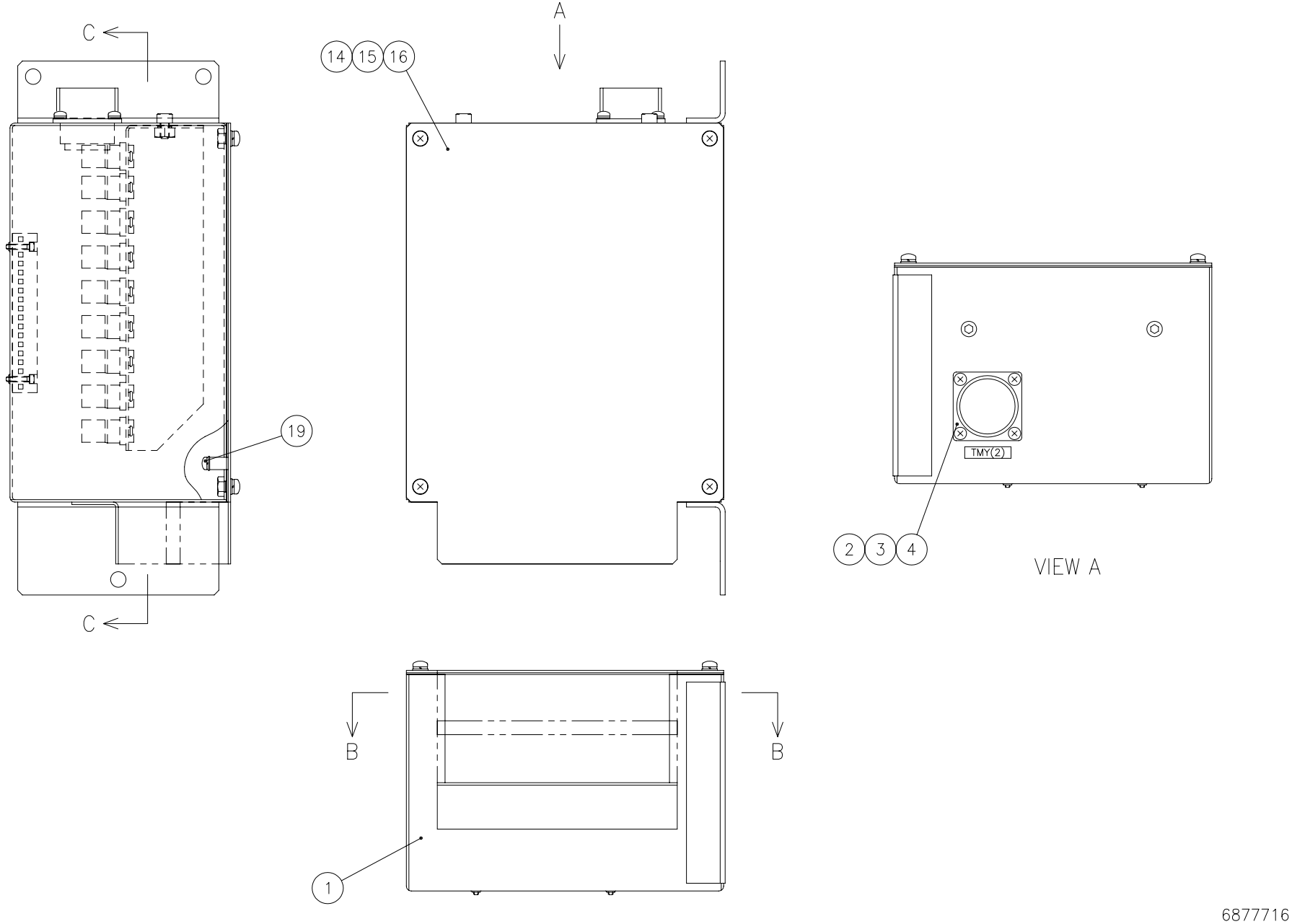
C
C
A
14
15
16
19
TMY(2)
2
3
4
VIEW A
B
B
1
6877716

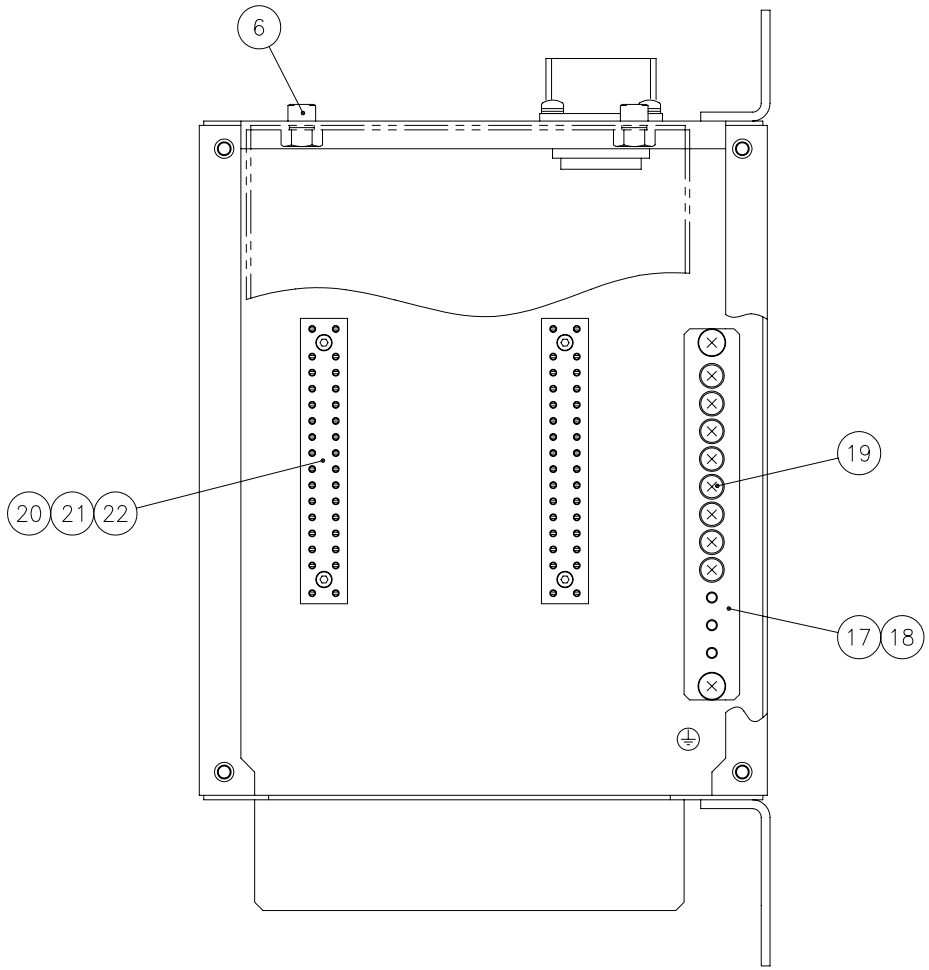

SECTION B–B

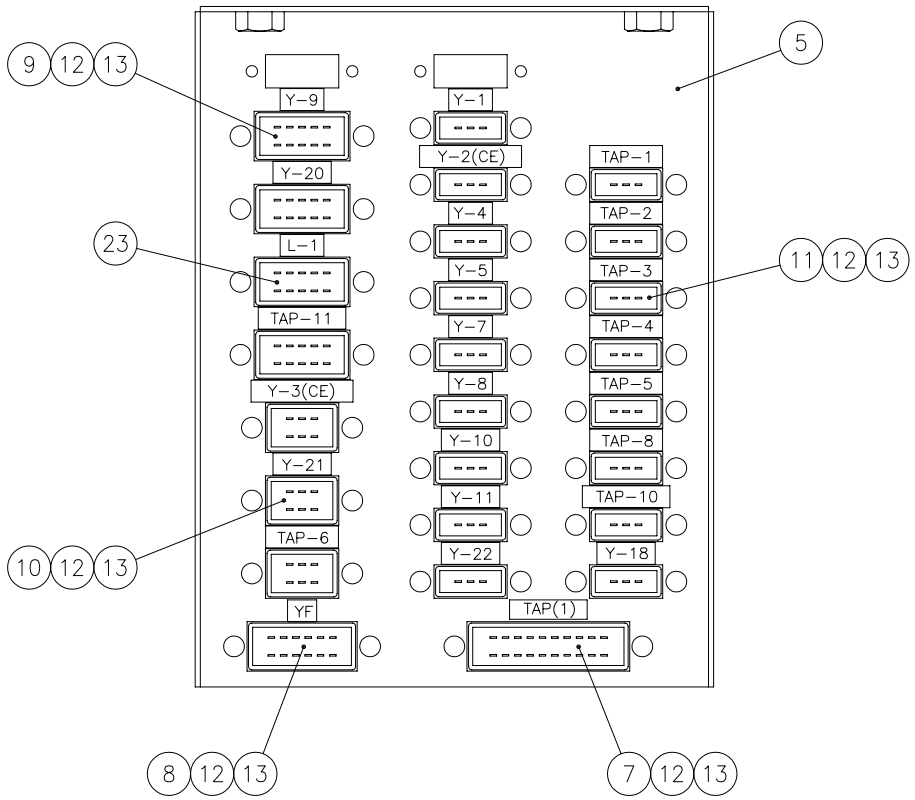

SECTION C–C

6877716

Index	Code	Parts Name	Drawing No.	Type	Maker	Q'ty	Note
1	74418481	Relay Box (Y)	6875398			1	
2	74570029	Metallic Connector	P860003048	JL05-2A24-52APC-F0	JAE	1	52P
3	74386731	Accessory For Connector	P862188037	ST-JL05-20P-C1-100	JAE	52	
4	74570030	Pan Head Screw with Washer	P334200115	M4X10(Chromate P-4)		4	
5	74418482	Housing Plate (Y)	6875399			1	
6	31183033	Hex Soc Cap Screw	P330220003	M6X10		2	
7	71372016	Rectangle Connector	P862042072	178803-8	AMP	1	20P
8	74387013	Rectangle Connector	P862042070	178803-6	AMP	1	12P
9	74387014	Rectangle Connector	P862042069	178803-5	AMP	4	10P
10	74386501	Rectangle Connector	P862042068	178803-3	AMP	3	6P
11	74386502	Rectangle Connector	P862042073	1-178802-3	AMP	17	3P
12	74386503	Plug Type Terminal	P862142036	175289-5	AMP	112	
13	74386505	Accessory For Connector	P862182002	900128-2	AMP	52	
14	74418483	Relay Box Cover (Y)	6875400			1	
15	74570033	Pan Head Screw with Washer	P334200134	M5X10(Chromate P-4)		4	
16	74418484	Packing (Y)	6875401			1	
17	74418478	Ground Bar	6873034			1	
18	74569456	Pan Head Screw with Washer	P334200133	M5X8(Chromate P-4)		2	
19	74569811	Pan Head Screw with Washer	P334200113	M4X6(Chromate P-4)		9	

Index	Code	Parts Name	Drawing No.	Type	Maker	Q'ty	Note
20	74569809	Block Terminal	P864008047	MK4/16KRG	WEIDMULLER	2	
21	74386496	Plug Type Terminal	P862148024	H0.75/15	WEIDMULLER	37	
22	79316101	Hex Soc Cap Screw	P330200006	M3X15		4	
23	74418485	Jumper Connector (L-1)	6877729			1	

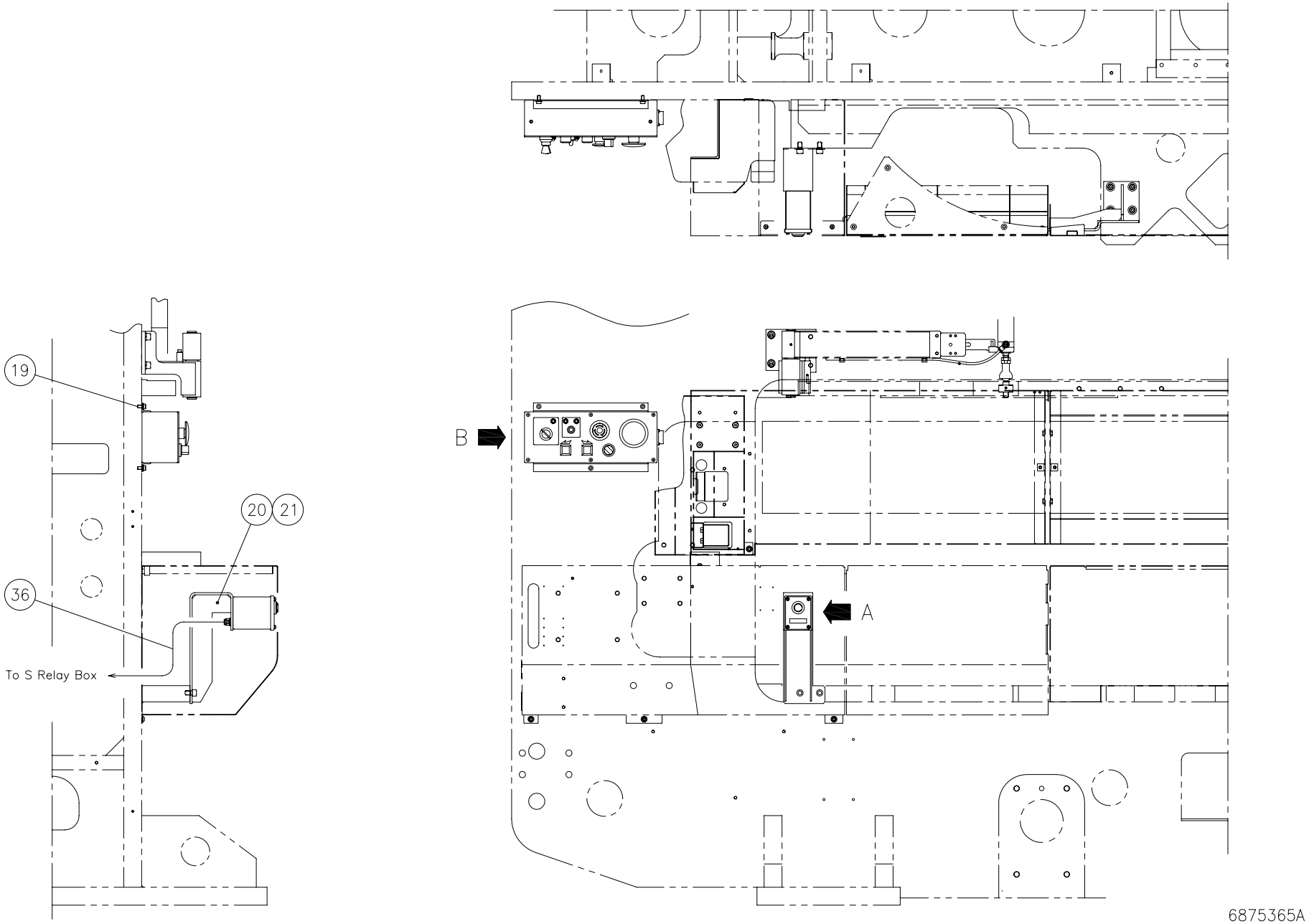
19
20
21
36
To S Relay Box
B
A
6875365A

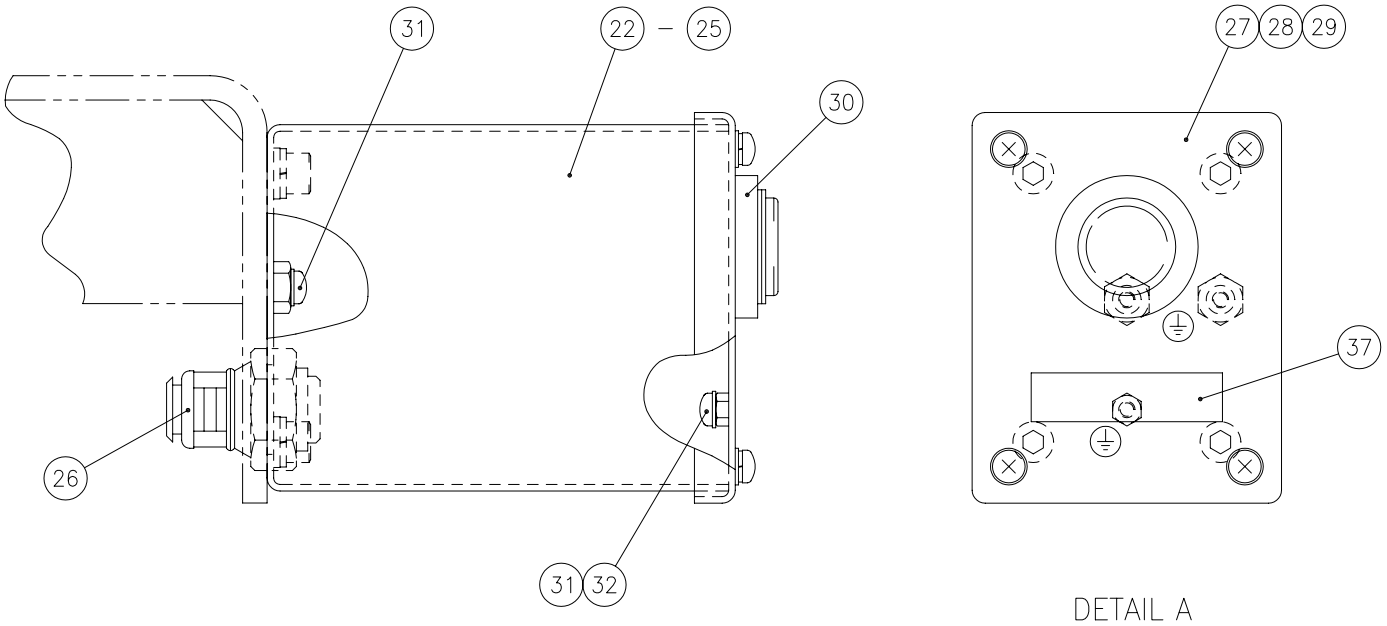
31
22 – 25
30
26
31 32
27 28 29
37
DETAIL A

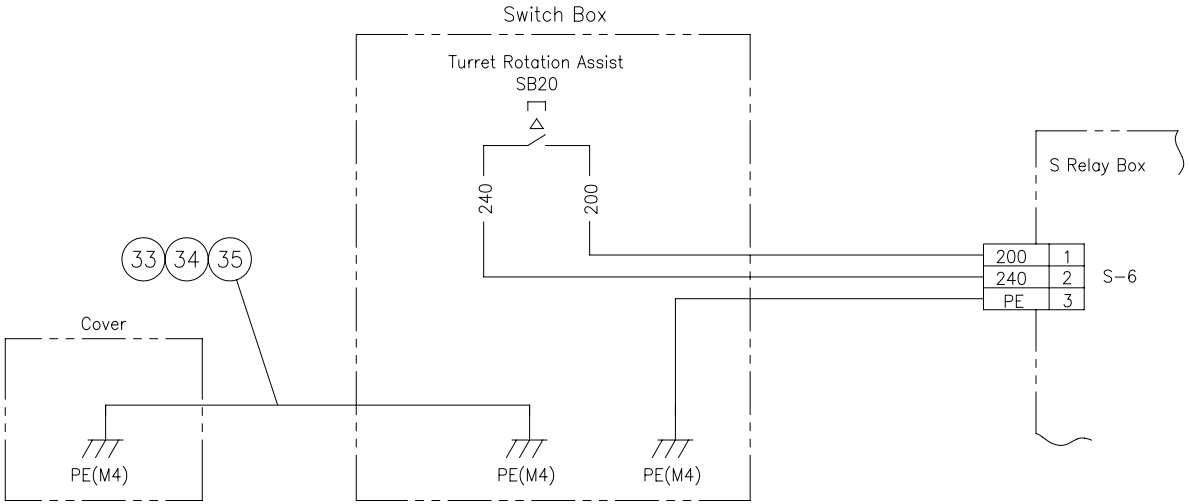
Switch Box
Turret Rotation Assist
SB20
240
200
S Relay Box
200 1
240 2
PE 3
S–6
33 34 35
Cover
PE(M4)
PE(M4)
PE(M4)

6875365A

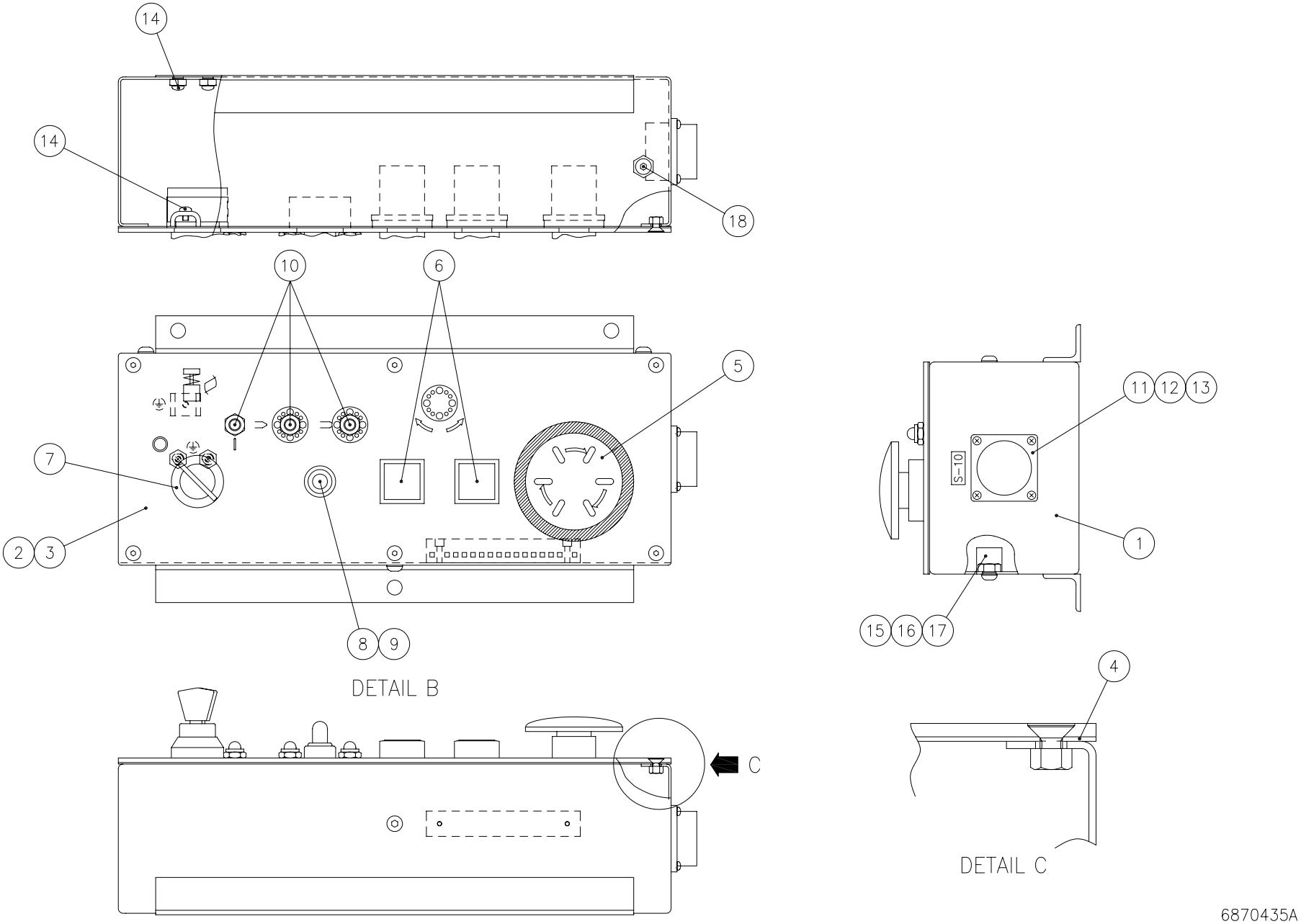
14
14
18
10
6
5
7
2
3
8
9
DETAIL B
C
11
12
13
S-10
1
15
16
17
4
DETAIL C
6870435A

Index	Code	Parts Name	Drawing No.	Type	Maker	Q'ty	Note
1	74570045	Sub Control Box (CE)	6820270			1	
2	74415622	Legend Plate (Sub Control)EX	6870438			1	EXP
2	74415621	Legend Plate (Sub Control)CE	6870436			1	EU
2	74419251	Legend Plate (Sub Control)Ch.	6817544			1	Chinese
3	79321267	Flat Head Bolt	P334520006	M5X10		6	
4	74570047	Packing (CE Sub-Operation Box)	6820272			1	
5	74570048	Push Switch	P821124129	AR30V1R-02R-Z037	FUJI Electric	1	Emergency Stop
6	74570049	Push Switch	P821084087	AR22F0S-10W-Z037	FUJI Electric	2	Turret Jog
7	74415122	Key Select Switch	P820014100	AR30JR-2D01A	FUJI Electric	1	Tool Change
8	74568080	Toggle Switch	7833079	SDT-110G-02SCAU	SHINDEN	1	Index Pin (OUT/IN)
9	75419224	Accessory For Toggle Switch	P823088001	WD1911	MATSUSHITA	1	
10	74381663	Indicator Apparatus	P843018002	BD-1402G	OKAYA	3	
11	74382195	Plastic R Connector	P862032008	206838-1	AMP	1	24P
12	75419126	Plug Type Terminal	P862142012	66103-2	AMP	24	
13	74569454	Pan Head Screw with Washer	P334200145	M3X8(Chromate P-4)		4	
14	74569811	Pan Head Screw with Washer	P334200113	M4X6(Chromate P-4)		3	
15	74569809	Block Terminal	P864008047	MK4/16KRG	WEIDMULLER	1	
16	74386496	Plug Type Terminal	P862148024	H0.75/15	WEIDMULLER	5	
17	79316101	Hex Soc Cap Screw	P330200006	M3X15		2	

Index	Code	Parts Name	Drawing No.	Type	Maker	Q'ty	Note
18	36379029	Button Head Screw	P334500013	M6X10		3	
19	74382078	Flange Socket Bolt	P330468006	M8X15	NISSAN NEJI	3	for Sub Operation Box
20	74570044	Bracket (Switch Box)	6812994			1	
21	86610808	Hex Soc Cap Screw	P330250003	M12X20		2	
22	74385959	Switch Box	6594604			1	
23	79564305	Hex Soc Cap Screw	P330220006	M6X15		4	
24	79564311	Spring Washer	P336050005	6		4	
25	79565419	Washer	P336000005	6(Regular Round)		4	
26	74723041	Accessory For Conduit	P866108009	NC-1	NICS	1	
27	74385961	Cap	6594605			1	
28	74386232	Packing (2)	6594606			1	
29	74570030	Pan Head Screw with Washer	P334200115	M4X10(Chromate P-4)		4	
30	74386508	Push Switch	P821124106	AR30F0R-10W	FUJI Electric	1	
31	79316416	Pan Head Screw	P334100016	M4X6		3	
32	71516078	Washer	P336000088	4(Regular Round)		1	Chrome Plating
33	36161582	Marker Tube	P869220210	1.25		2	
34	71108224	Solderless Terminal	P869200003	R1.25-4		2	
35	74810602	Vinyl Cord	QZZ040413	KIV0.75X250(Y/G)		1	
36	74419134	Cable S-6	6877627			1	

From Serial No.36102001 and after

Index	Code	Parts Name	Drawing No.	Type	Maker	Q'ty	Note
37	74307484	Sticker (Turret)(Export)	6502741			1	EXP
37	74415620	Sticker (Turret)(CE)	6870448			1	EU
37	74419252	Sticker (Turret Jog On) Ch.	6817533			1	Chinese

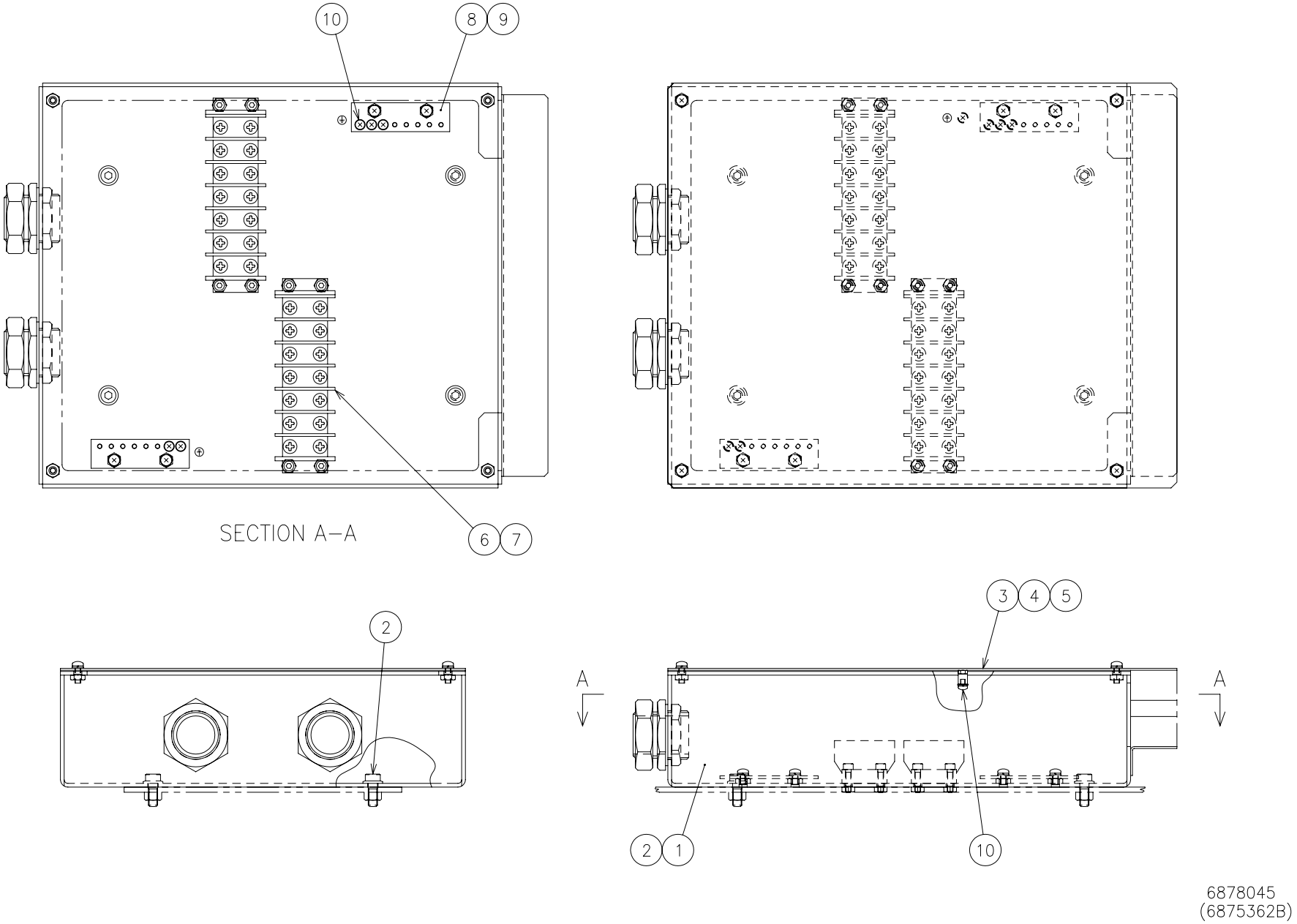
10
8
9
SECTION A–A
6
7
2
3
4
5
A
A
2
1
10
6878045
(6875362B)

From Serial No.36102001 and after

Index	Code	Parts Name	Drawing No.	Type	Maker	Q'ty	Note
1	74419135	Relay Box (D)	6875380 B			1	
2	75420815	Flange Socket Bolt	P330468001	M8X20	NISSAN NEJI	4	
3	74418493	Relay Box (D) Cover	6875381			1	
4	74418494	Packing (D)	6875382			1	
5	74418495	Pan Head Screw with Washer	P334200136	M5X15(Chromate P-4)		4	
6	74418506	Block Terminal	P864004042	TS-807B-7P	KIMDEN	2	
7	79572402	Hex Soc Cap Screw	P330210009	M5X20		8	
8	74415646	Ground Bar	6870461			2	
9	74570033	Pan Head Screw with Washer	P334200134	M5X10(Chromate P-4)		4	
10	74569811	Pan Head Screw with Washer	P334200113	M4X6(Chromate P-4)		8	(Ground)

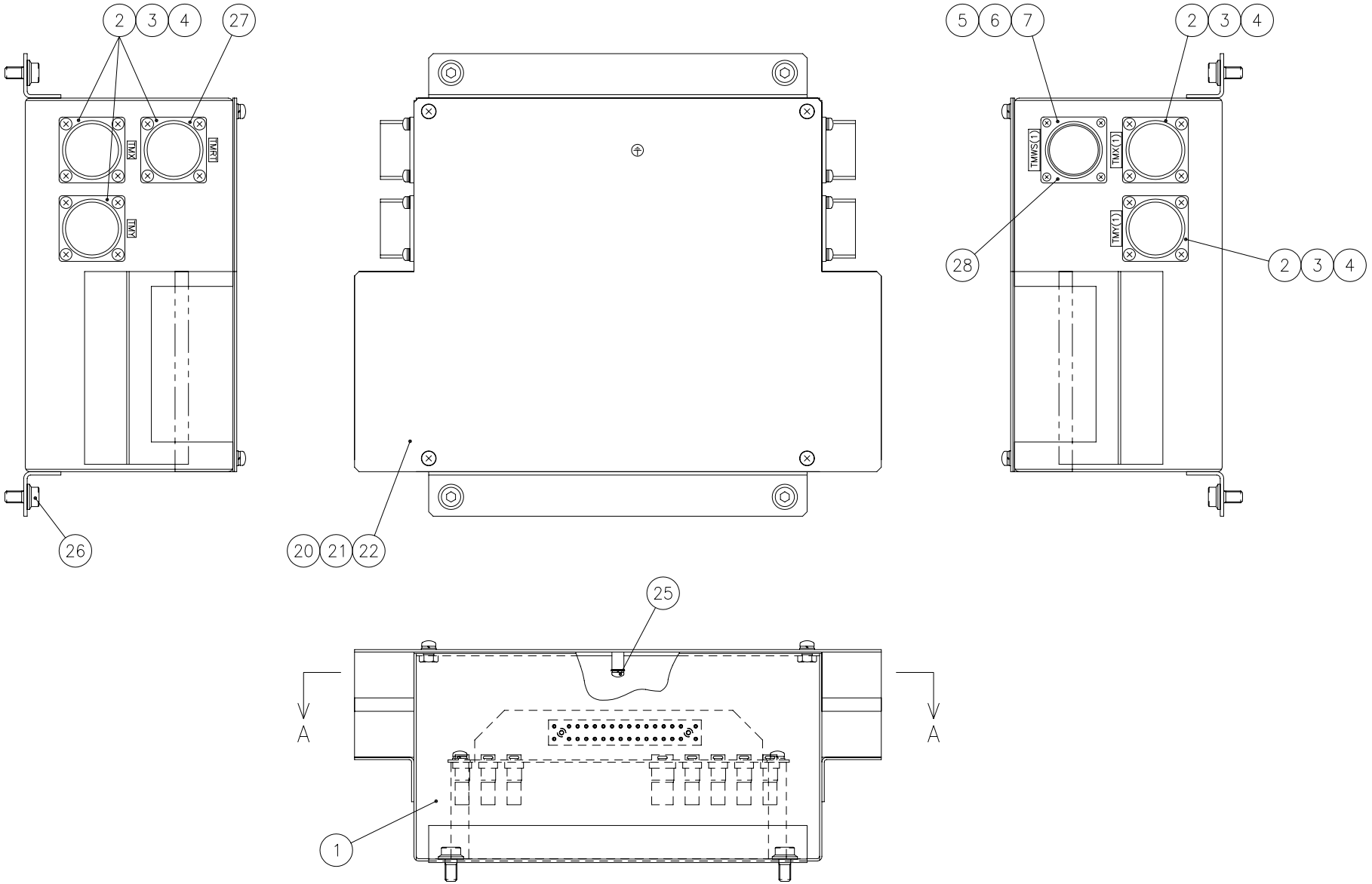

6877717

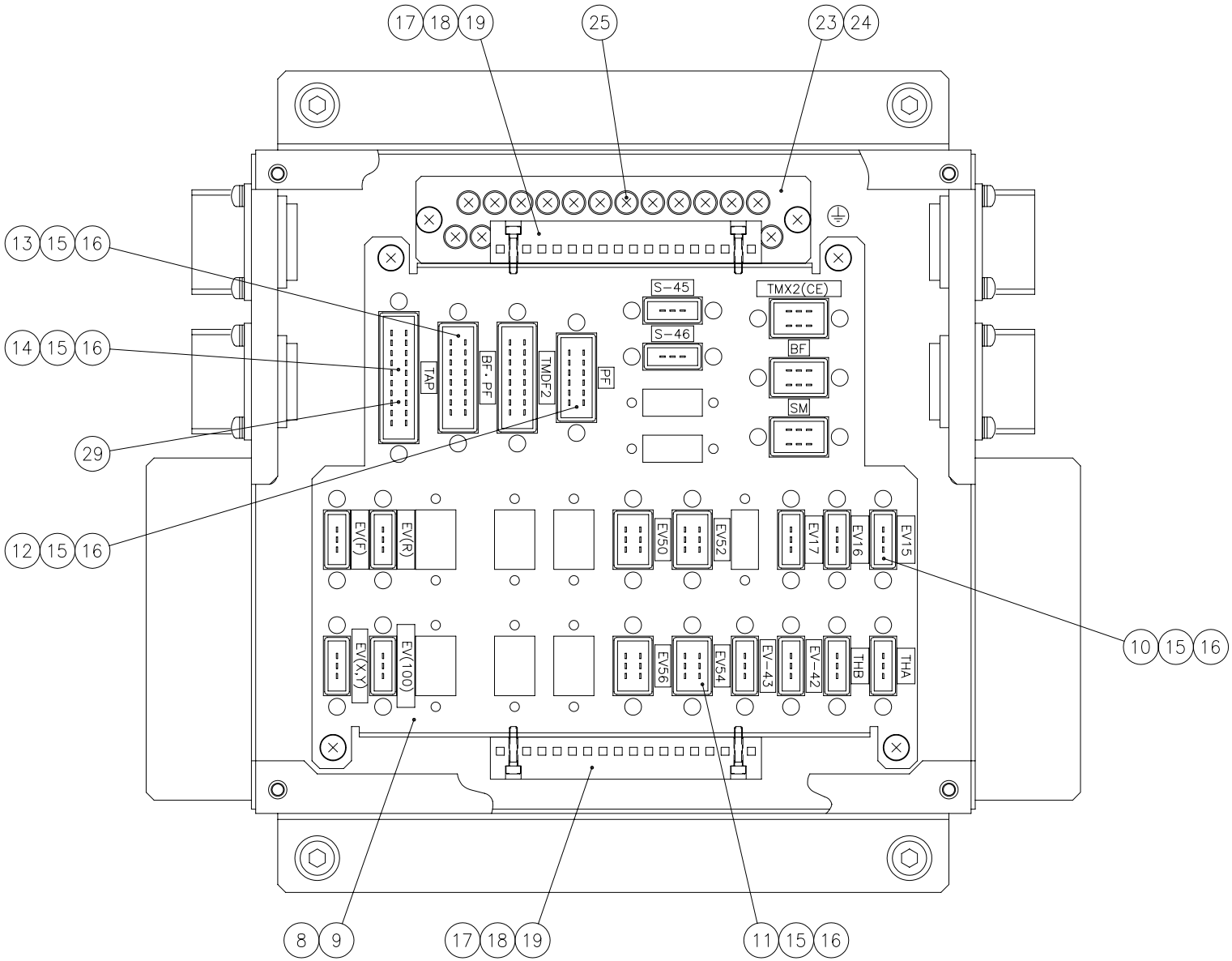

SECTION A–A

6877717

Index	Code	Parts Name	Drawing No.	Type	Maker	Q'ty	Note
1	74418496	Relay Box (DF)	6875370			1	
2	74570029	Metallic Connector	P860003048	JL05-2A24-52APC-F0	JAE	5	52P
3	74386731	Accessory For Connector	P862188037	ST-JL05-20P-C1-100	JAE	260	
4	74570030	Pan Head Screw with Washer	P334200115	M4X10(Chromate P-4)		20	
5	74382195	Plastic R Connector	P862032008	206838-1	AMP	1	24P
6	74379484	Plug Type Terminal	P862142002	66099-2	AMP	21	
7	74569454	Pan Head Screw with Washer	P334200145	M3X8(Chromate P-4)		4	
8	74418497	Housing Plate (DF)	6875371			1	
9	74570033	Pan Head Screw with Washer	P334200134	M5X10(Chromate P-4)		4	
10	74386502	Rectangle Connector	P862042073	1-178802-3	AMP	11	3P
11	74386501	Rectangle Connector	P862042068	178803-3	AMP	7	6P
12	74387013	Rectangle Connector	P862042070	178803-6	AMP	1	12P
13	74386500	Rectangle Connector	P862042071	178803-7	AMP	2	16P
14	71372016	Rectangle Connector	P862042072	178803-8	AMP	1	20P
15	74386503	Plug Type Terminal	P862142036	175289-5	AMP	123	
16	74386505	Accessory For Connector	P862182002	900128-2	AMP	44	
17	74569809	Block Terminal	P864008047	MK4/16KRG	WEIDMULLER	2	
18	74386496	Plug Type Terminal	P862148024	H0.75/15	WEIDMULLER	25	
19	79316101	Hex Soc Cap Screw	P330200006	M3X15		4	

Index	Code	Parts Name	Drawing No.	Type	Maker	Q'ty	Note
20	74418498	Relay Box Cover (DF)	6875372			1	
21	74570033	Pan Head Screw with Washer	P334200134	M5X10(Chromate P-4)		4	
22	74418499	Packing (DF)	6875373			1	
23	74418501	Ground Bar (M4-25)	6875374			1	
24	74569456	Pan Head Screw with Washer	P334200133	M5X8(Chromate P-4)		2	
25	74569811	Pan Head Screw with Washer	P334200113	M4X6(Chromate P-4)		16	(Ground)
26	74382078	Flange Socket Bolt	P330468006	M8X15	NISSAN NEJI	4	
27	74418502	Accessory For Metall-Connector	P860088013	JL05-24DC	JAE	1	Connector TMRT
28	74418503	Accessory For Connector	P862182009	207446-1	AMP	1	Connector TMWS(1)
29	74418504	Jumper Connector (TAP)	6877728			1	TAP

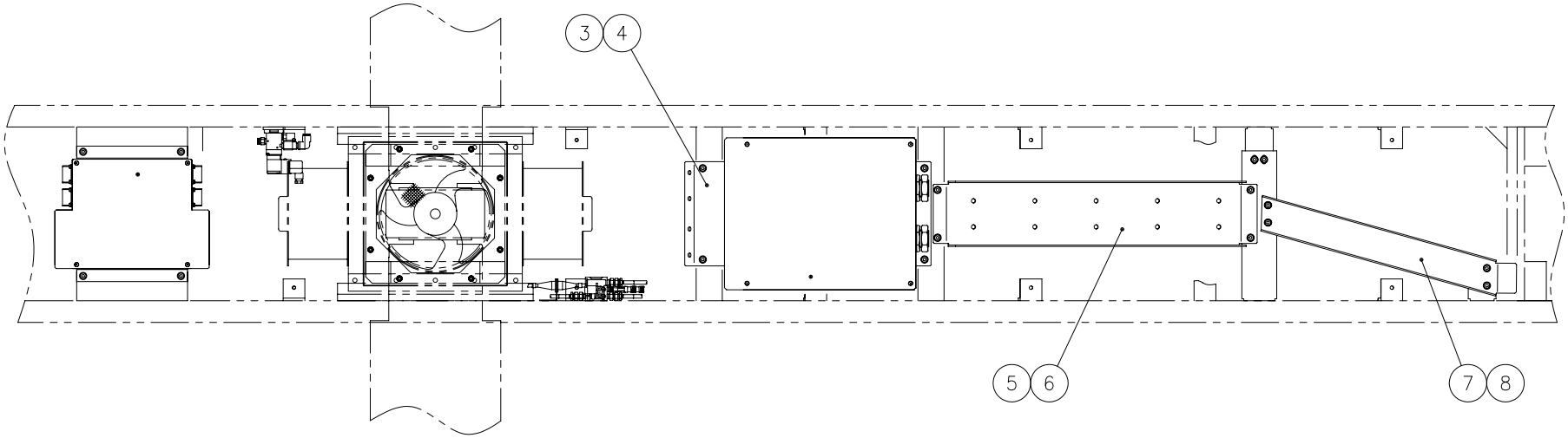

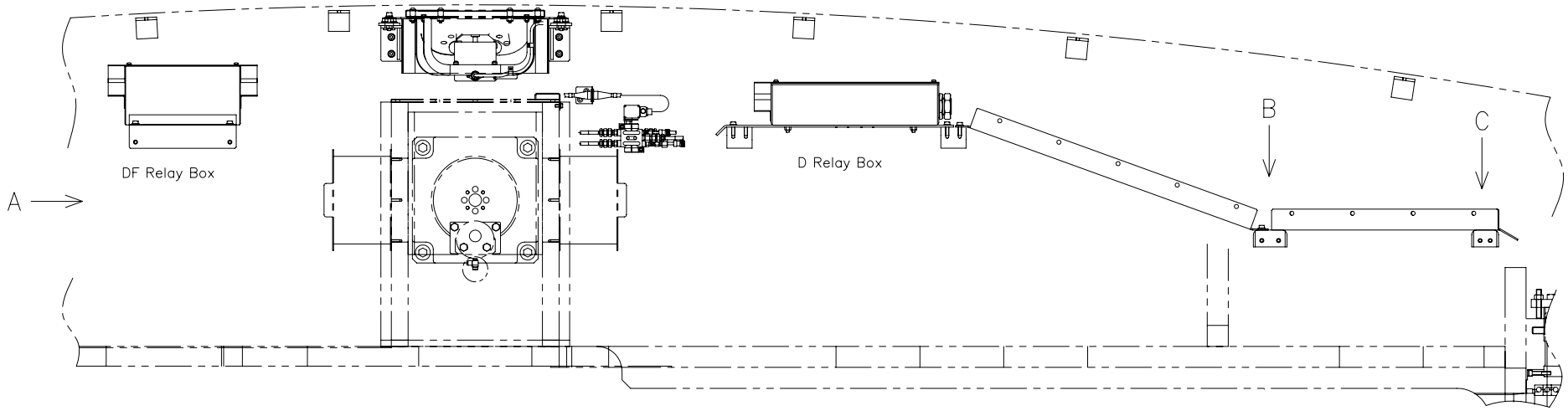

6875364

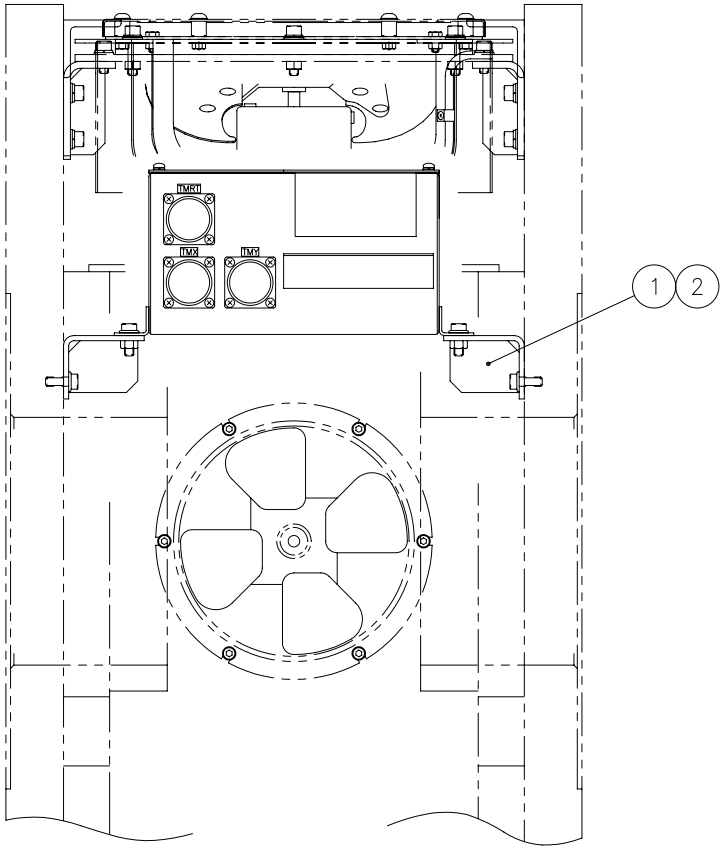

VIEW A

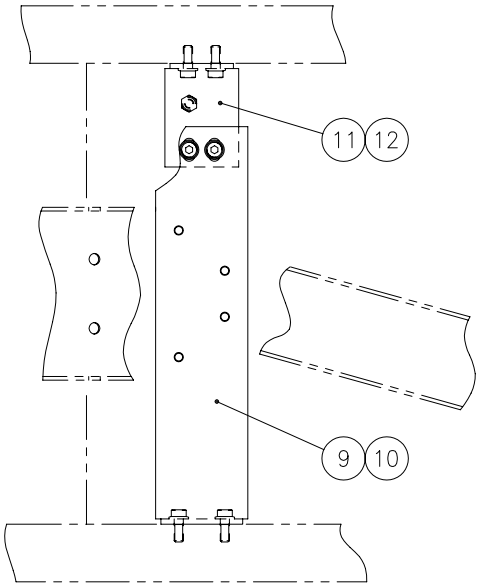

VIEW B

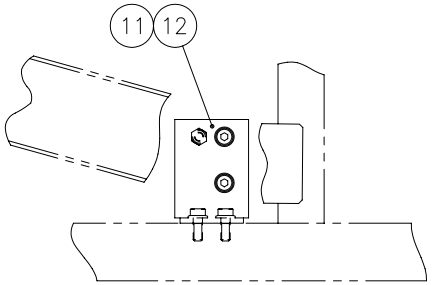

VIEW C

6875364

Index	Code	Parts Name	Drawing No.	Type	Maker	Q'ty	Note
1	74418486	Relay Box Base (DF)	6875376			2	
2	75420815	Flange Socket Bolt	P330468001	M8X20	NISSAN NEJI	4	
3	74418487	Relay Box Base (D)	6875385			1	
4	75420815	Flange Socket Bolt	P330468001	M8X20	NISSAN NEJI	4	
5	74418488	Duct (L)	6875386			1	
6	75420815	Flange Socket Bolt	P330468001	M8X20	NISSAN NEJI	4	
7	74418489	Duct (S)	6875387			1	
8	75420815	Flange Socket Bolt	P330468001	M8X20	NISSAN NEJI	4	
9	74418490	Duct Bracket (L)	6875388			1	
10	75420815	Flange Socket Bolt	P330468001	M8X20	NISSAN NEJI	4	
11	74418491	Duct Bracket (S)	6875389			2	
12	75420815	Flange Socket Bolt	P330468001	M8X20	NISSAN NEJI	4	
13	74568662	Cable Band	P381058102	PLT2S	KITAGAWA	23	List Only

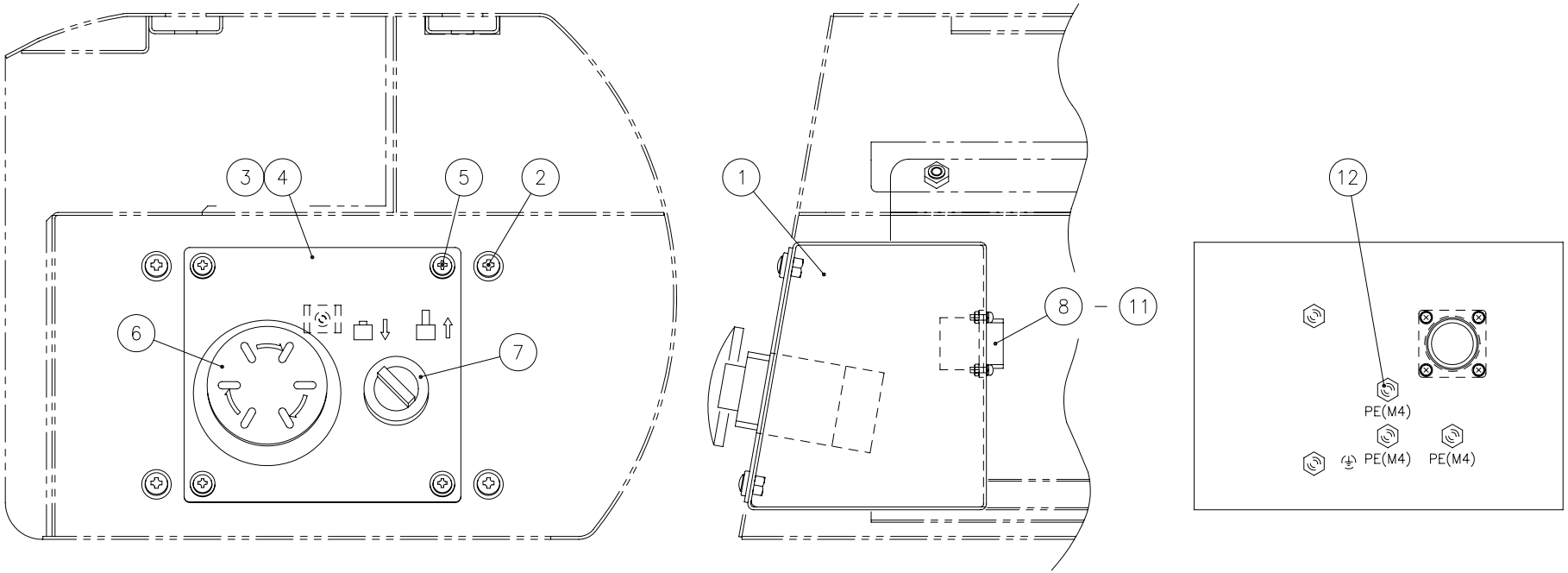

6874515

Unit No. 49

Electric(8) From Serial No.36102001 and after

Index	Code	Parts Name	Drawing No.	Type	Maker	Q'ty	Note
1	74417273	CR Control Box	6874522 A			1	
2	74722795	Knob Bolt	P338048002	Faced Screw -NO.3-M6X15	Tokyo Byora	4	
3	74417445	Legend Plate (C-Operation) EX	6877516			1	EXP
3	74417444	Legend Plate (C-Operation) CE	6874524			1	CE
3	74419253	Legend Plate (C-Operation)	6817543			1	Chinese
4	74417275	Packing	6874525			1	
5	74722794	Knob Bolt	P338048001	Faced Screw -NO.2-M5X10	Tokyo Byora	4	
6	74570048	Push Switch	P821124129	AR30V1R-02R-Z037	FUJI Electric	1	Emergency Stop
7	75429231	Key Select Switch	P820004083	AR30PR-210B-Z037	FUJI Electric	1	Locating Pin
8	74521705	Plastic R Connector	P862032003	206036-1	AMP	1	
9	74384510	Plug Type Terminal	P862142020	66400-1	AMP	9	
10	74570051	Pan Head Screw with Washer	P334200109	M3X10(Chromate P-4)		4	
11	74307616	Nut	P332000001	M3		4	
12	74569811	Pan Head Screw with Washer	P334200113	M4X6(Chromate P-4)		4	

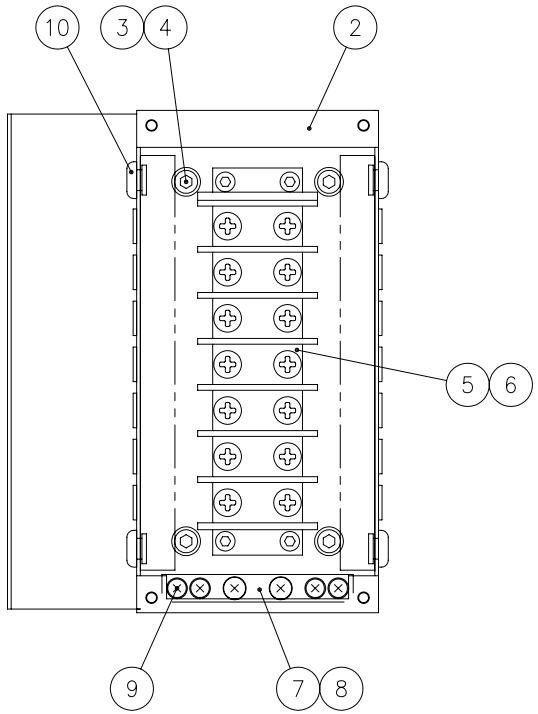

SECTION A–A

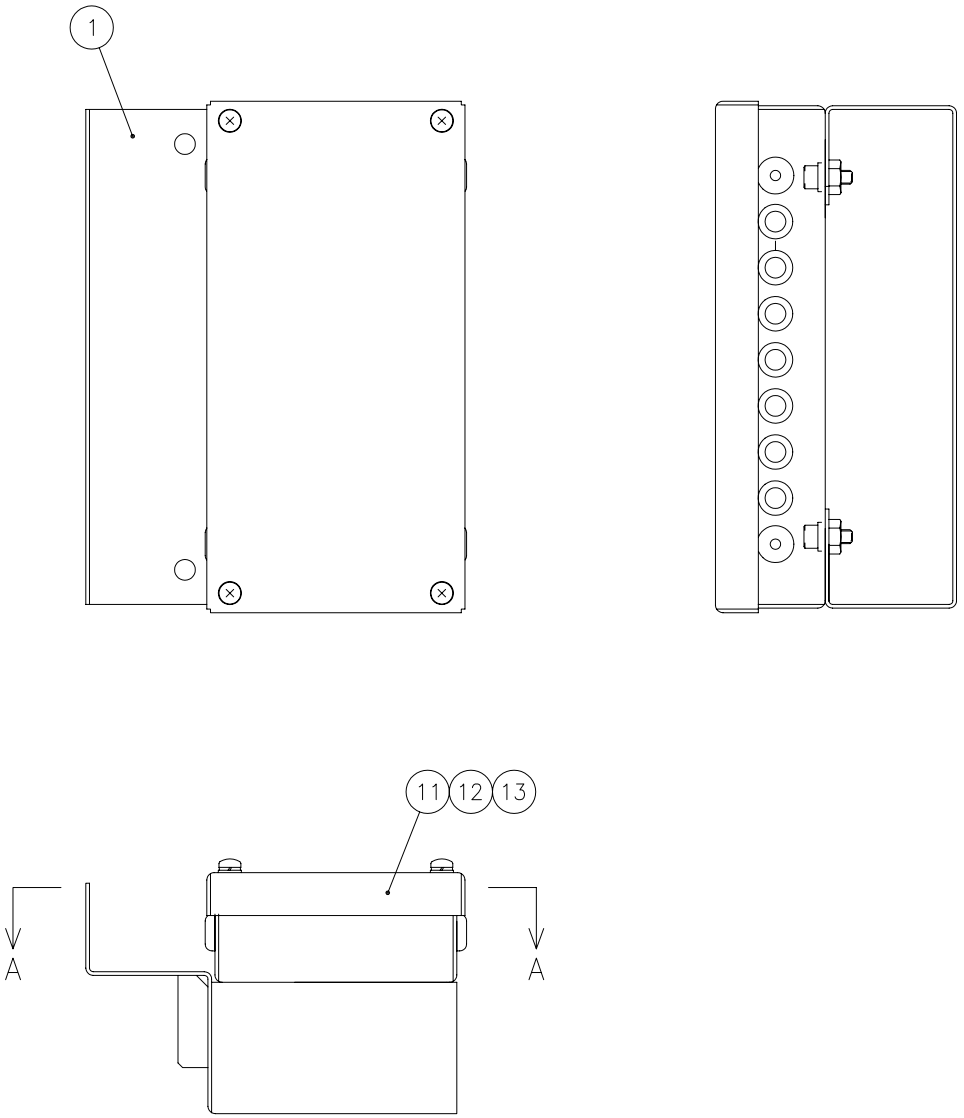

<Relay Box (AF)>

6878060
6878061
(6878040)

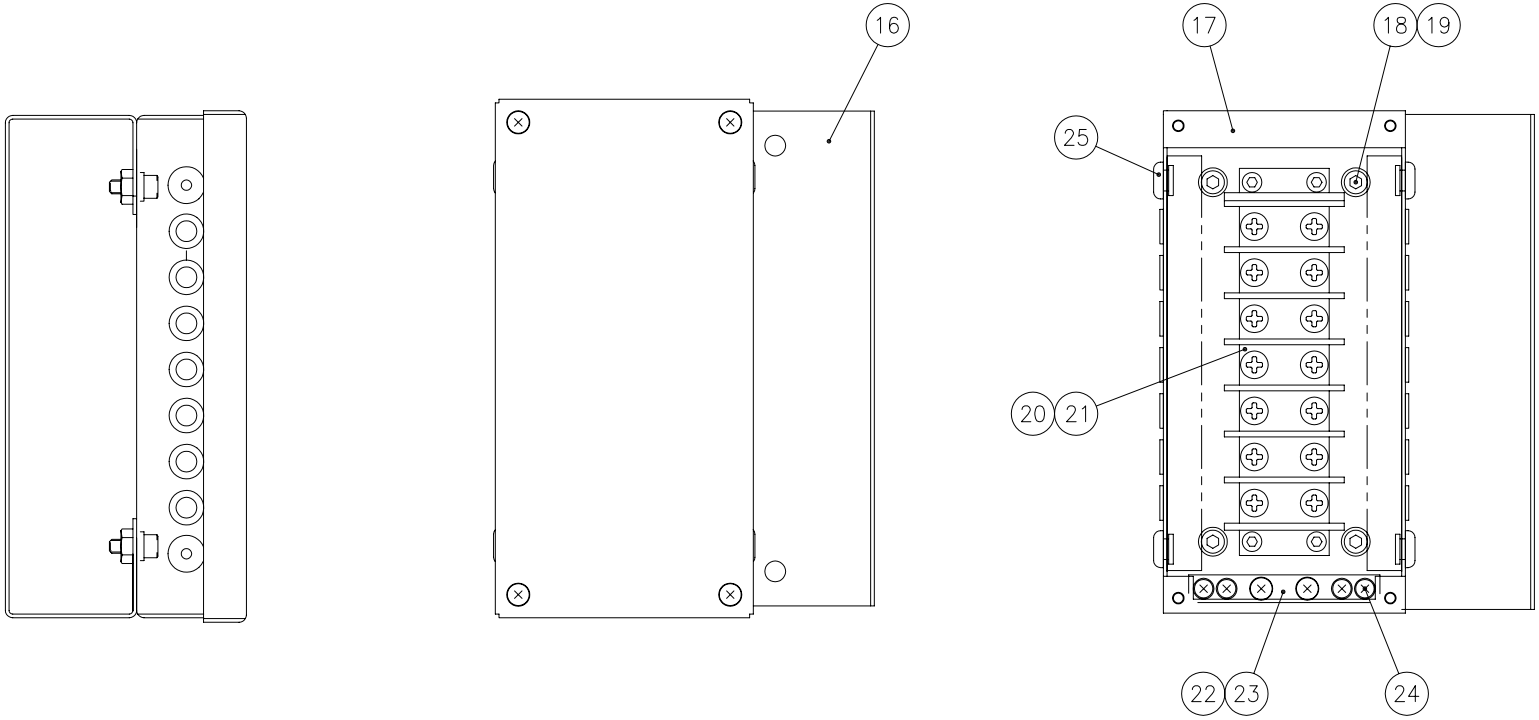

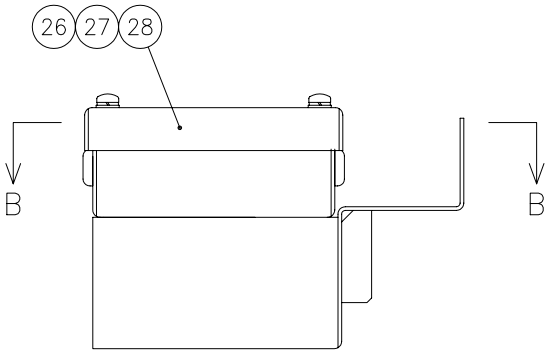

<Relay Box (AR)>

6878060
6878061
(6878040)

From Serial No.36102001 and after

Index	Code	Parts Name	Drawing No.	Type	Maker	Q'ty	Note
1	74418505	Bracket (A)	6878046			1	
2	74418509	Relay Box (A)	6878041			1	
3	79565419	Washer	P336000005	6(Regular Round)		4	
4	79564305	Hex Soc Cap Screw	P330220006	M6X15		4	
5	74418506	Block Terminal	P864004042	TS-807B-7P	KIMDEN	1	
6	79316111	Hex Soc Cap Screw	P330210010	M5X25		4	
7	74418507	Ground Bar (A)	6878044			1	
8	74570033	Pan Head Screw with Washer	P334200134	M5X10(Chromate P-4)		2	
9	74569811	Pan Head Screw with Washer	P334200113	M4X6(Chromate P-4)		5	(Ground)
10	74418508	Bush For Cable	P229112098	C-30-SG-9A-UL	TAKIGEN	1	
11	74418510	Packing (A)	6878043			2	
12	74418511	Cap (A)	6878042			1	
13	74418495	Pan Head Screw with Washer	P334200136	M5X15(Chromate P-4)		4	
14	74419254	Bush For Cable	P229112100	C-30-NG-79-E-UL	TAKIGEN	7	for Motor (List Only)
15	36389302	Solderless Terminal	P869200013	R14-6		7	for Motor (List Only)
16	74418505	Bracket (A)	6878046			1	
17	74418509	Relay Box (A)	6878041			1	
18	79565419	Washer	P336000005	6(Regular Round)		4	
19	79564305	Hex Soc Cap Screw	P330220006	M6X15		4	

From Serial No.36102001 and after

Index	Code	Parts Name	Drawing No.	Type	Maker	Q'ty	Note
20	74418506	Block Terminal	P864004042	TS-807B-7P	KIMDEN	1	
21	79316111	Hex Soc Cap Screw	P330210010	M5X25		4	
22	74418507	Ground Bar (A)	6878044			1	
23	74570033	Pan Head Screw with Washer	P334200134	M5X10(Chromate P-4)		2	
24	74569811	Pan Head Screw with Washer	P334200113	M4X6(Chromate P-4)		5	(Ground)
25	74418508	Bush For Cable	P229112098	C-30-SG-9A-UL	TAKIGEN	1	
26	74418510	Packing (A)	6878043			2	
27	74418511	Cap (A)	6878042			1	
28	74418495	Pan Head Screw with Washer	P334200136	M5X15(Chromate P-4)		4	
29	74419254	Bush For Cable	P229112100	C-30-NG-79-E-UL	TAKIGEN	7	for Motor (List Only)
30	36389302	Solderless Terminal	P869200013	R14-6		7	for Motor (List Only)

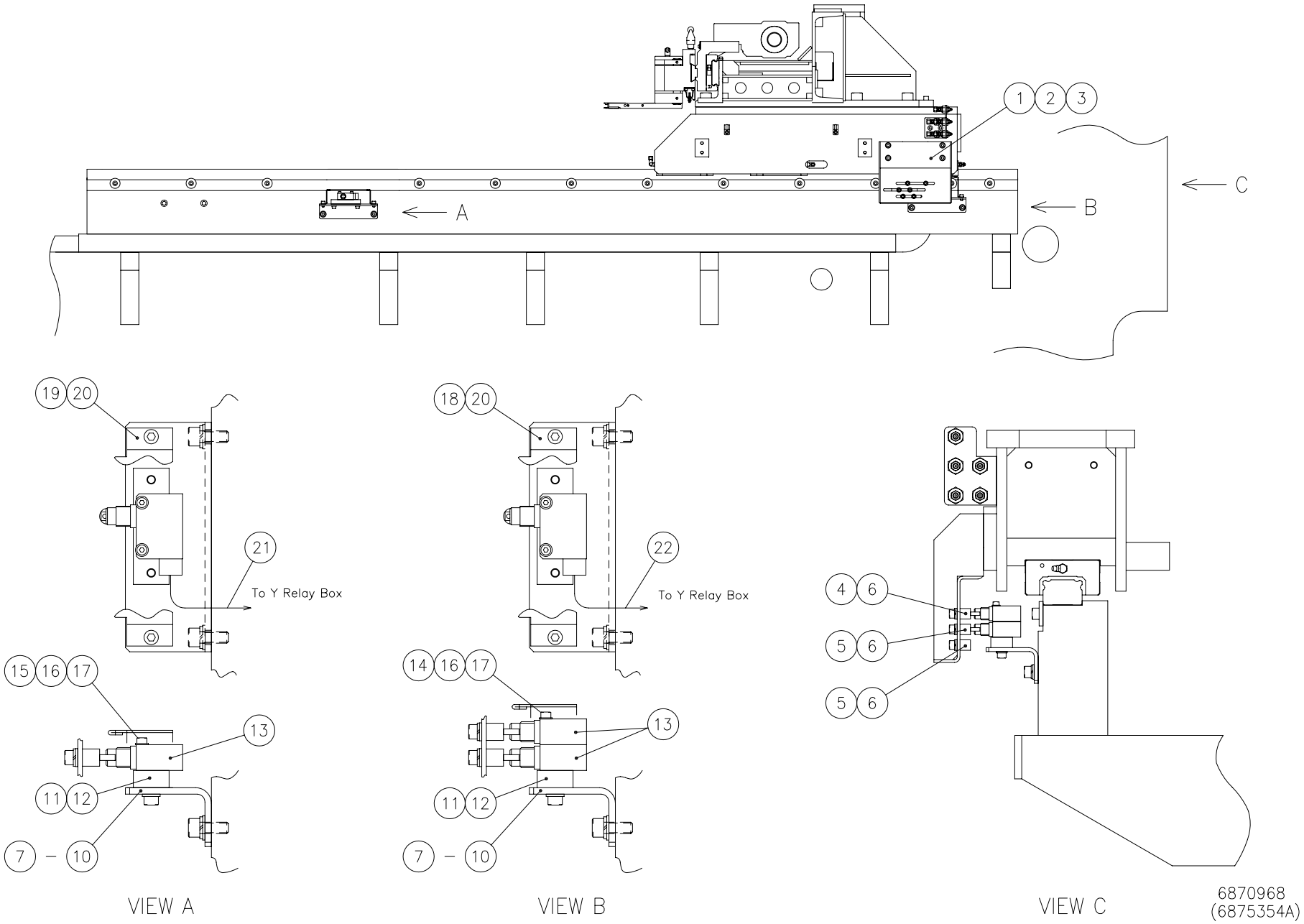
1
2
3
A
B
C
19
20
21
To Y Relay Box
15
16
17
13
11
12
7 – 10
VIEW A
18
20
22
To Y Relay Box
14
16
17
13
11
12
7 – 10
VIEW B
4
6
5
6
5
6
VIEW C
6870968
(6875354A)

Index	Code	Parts Name	Drawing No.	Type	Maker	Q'ty	Note
1	74415637	Dog Bracket (Y)	6828536			1	
2	79564804	Hex Soc Cap Screw	P330230006	M8X20		4	
3	86610326	Spring Washer	P336050006	8		4	
4	74570055	Dog	6813013			1	
5	74306902	Dog (OT)	0818707 A			2	
6	74379265	Hex Soc Cap Screw	P330498009	GT-LA-M6X10	GOSHO Works	6	
7	74415641	LS Bracket	6828537			2	
8	79564804	Hex Soc Cap Screw	P330230006	M8X20		4	
9	86610326	Spring Washer	P336050006	8		4	
10	79567109	Washer	P336000006	8(Regular Round)		4	
11	74415638	Adjustable Plate	6828538	FB25X12-81		2	
12	45252001	Flange Socket Bolt	P330460003	M6X15		4	
13	74721769	Limit Switch	P828013013	SL1-A-E	YAMATAKE	3	
14	36147161	Hex Soc Cap Screw	P330200026	M4X45		2	
15	86620303	Hex Soc Cap Screw	P330200023	M4X30		2	
16	79573507	Spring Washer	P336050003	4		4	
17	79573511	Washer	P336000003	4(Small Round)		4	
18	74415639	LS Cover (+Y)	6828539			1	
19	74415640	LS Cover (-Y)	6828540			1	

Index	Code	Parts Name	Drawing No.	Type	Maker	Q'ty	Note
20	31183033	Hex Soc Cap Screw	P330220003	M6X10		4	
21	74569993	Cable Y-2 (CE)	6820245			1	Y-axis OT(-)
22	74569994	Cable Y-3 (CE)	6820246			1	Y-axis OT(+),Power

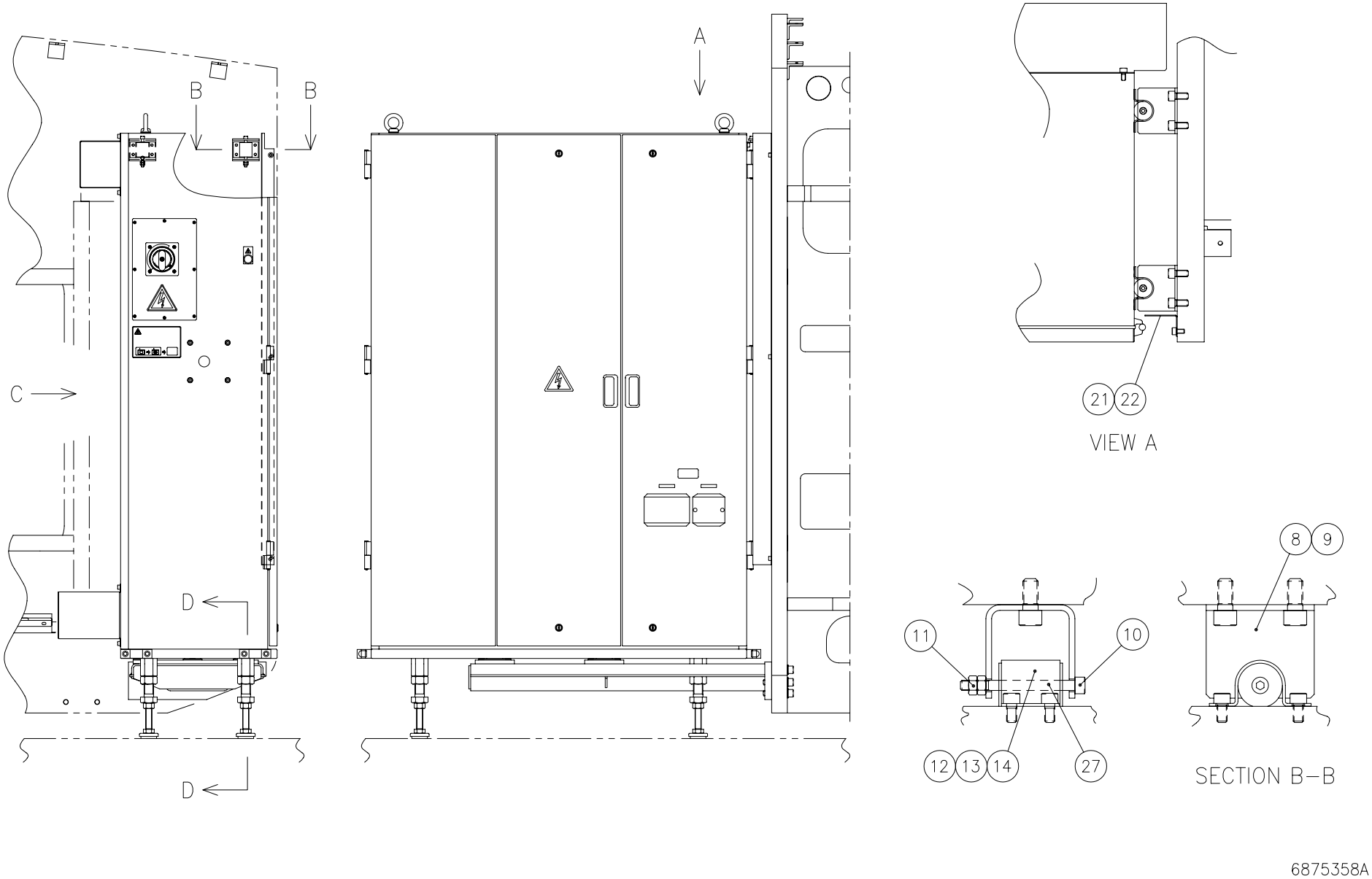
B
B
A
C
D
D
21
22
VIEW A
8
9
11
10
12
13
14
27
SECTION B–B
6875358A

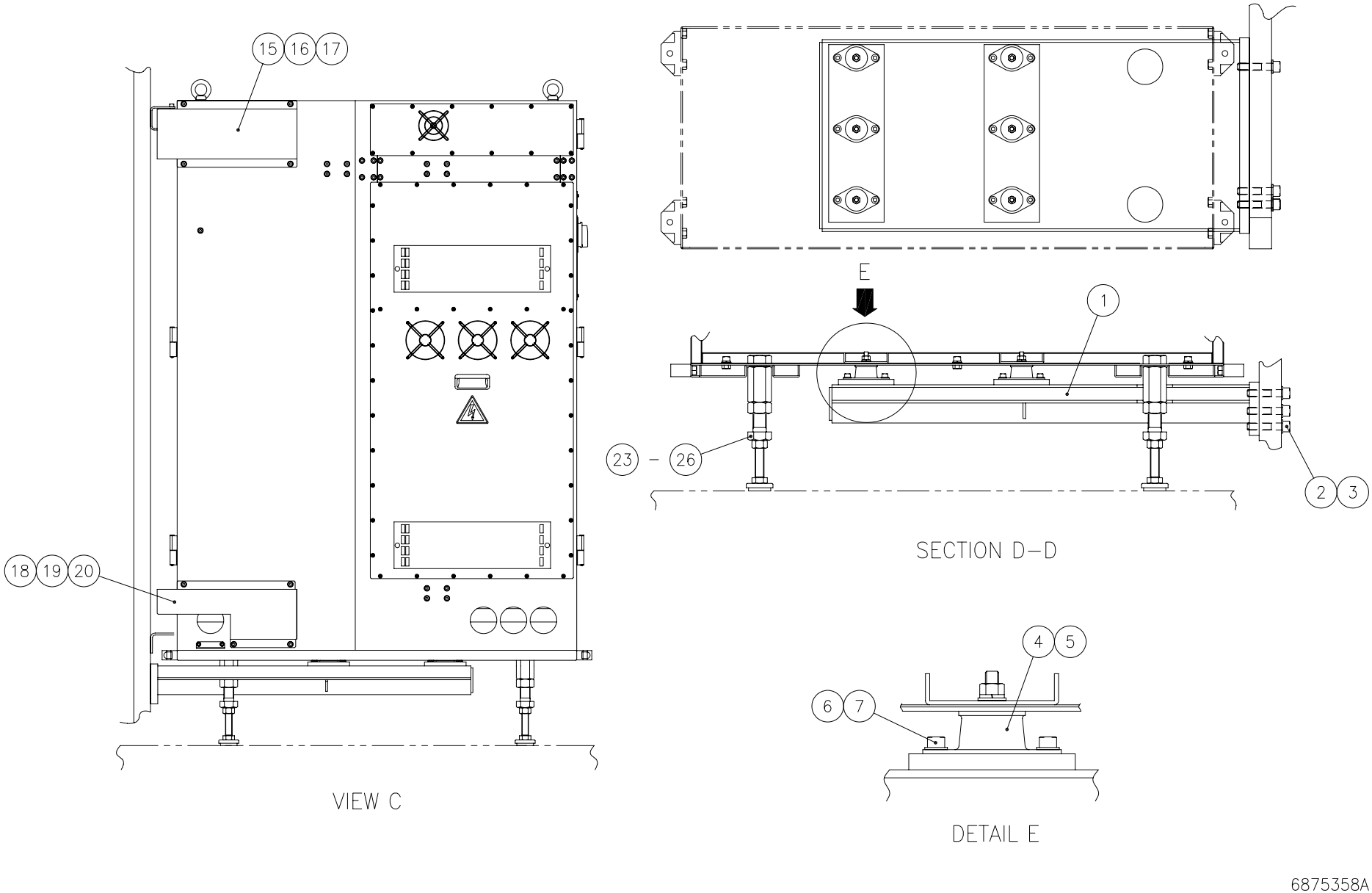
15
16
17
18
19
20
VIEW C
E
1
23
26
2
3
SECTION D–D
4
5
6
7
DETAIL E
6875358A

Index	Code	Parts Name	Drawing No.	Type	Maker	Q'ty	Note
1	74570058	NC Base	6813042			1	
2	36367712	Hex Soc Cap Screw	P330260040	M16X80		4	
3	10570320	Washer	P336000010	16(Regular Round)		4	
4	73115680	Vibration Isolator	P382002017	KLB-5045	KURASHIKI KAKO	6	
5	86611626	Washer	P336000007	10(Regular Round)		6	
6	79564804	Hex Soc Cap Screw	P330230006	M8X20		12	
7	79567109	Washer	P336000006	8(Regular Round)		12	
8	74570059	Stay	6813043			2	
9	79568704	Hex Soc Cap Screw	P330250004	M12X25		4	
10	36115339	Hex Soc Cap Screw	P330230020	M8X90		2	
11	74300504	Nut	P332000005	M8		4	
12	74385992	Rubber Holder	0818904			2	
13	79565423	Hex Soc Cap Screw	P330230004	M8X15		8	
14	74385993	Antivibration Rubber	P229242002	KK-3512-50	KURASHIKI KAKO	2	
15	74418512	Wiring Cover (Upper)	6875412			1	
16	79565423	Hex Soc Cap Screw	P330230004	M8X15		4	
17	74570021	Grommet	P229125011	KG016L-0.5M	KITAGAWA	1	
18	74418513	Wiring Cover (Lower)	6875413			1	
19	79565423	Hex Soc Cap Screw	P330230004	M8X15		4	

Index	Code	Parts Name	Drawing No.	Type	Maker	Q'ty	Note
20	74570021	Grommet	P229125011	KG016L-0.5M	KITAGAWA	1	
21	74571396	Gap Cover	6813048 B			1	
22	79565423	Hex Soc Cap Screw	P330230004	M8X15		3	
23	74385995	Level Bolt	6593617			4	
24	74320426	Nut	P332000012	M30		4	
25	74570064	Level Adjuster	P384022021	KC-280-0	TAKIGEN	4	
26	31186248	Nut	P332000010	M20		4	
27	74419136	Pipe	6875410			2	

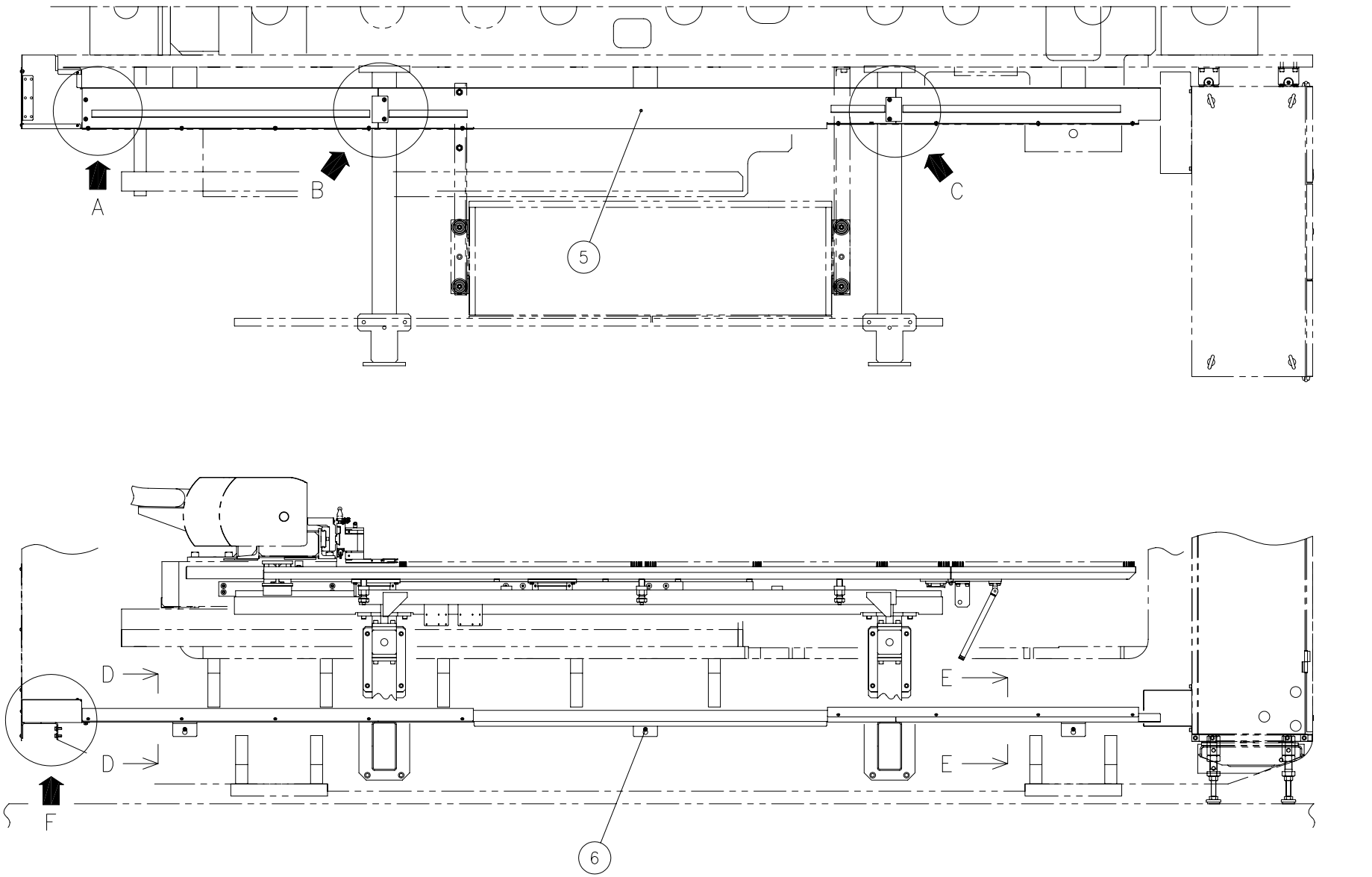
A
B
C
5
D
D
E
E
F
6
6875366

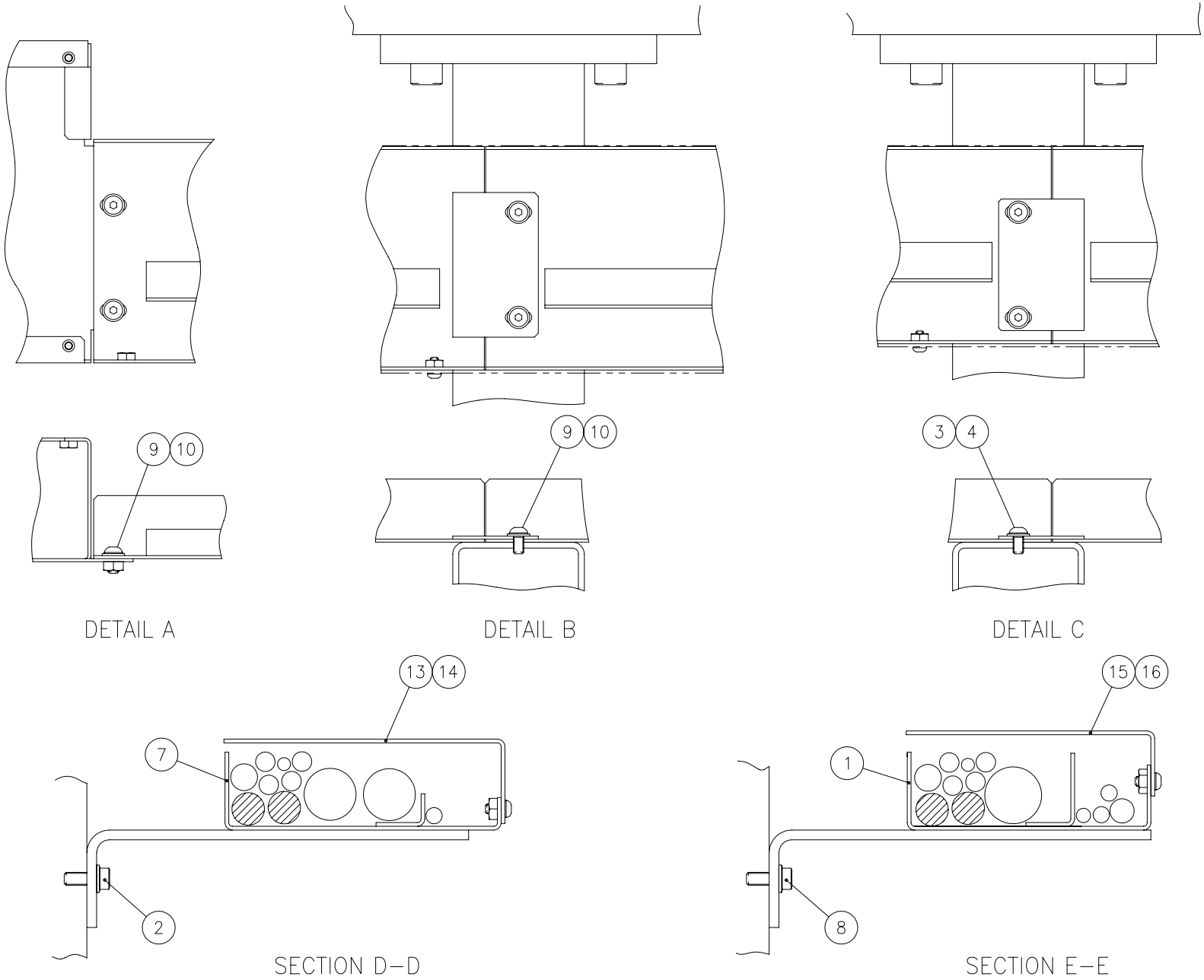
9
10
DETAIL A
9
10
DETAIL B
3
4
DETAIL C
13
14
7
2
SECTION D–D
15
16
1
8
SECTION E–E
6875366

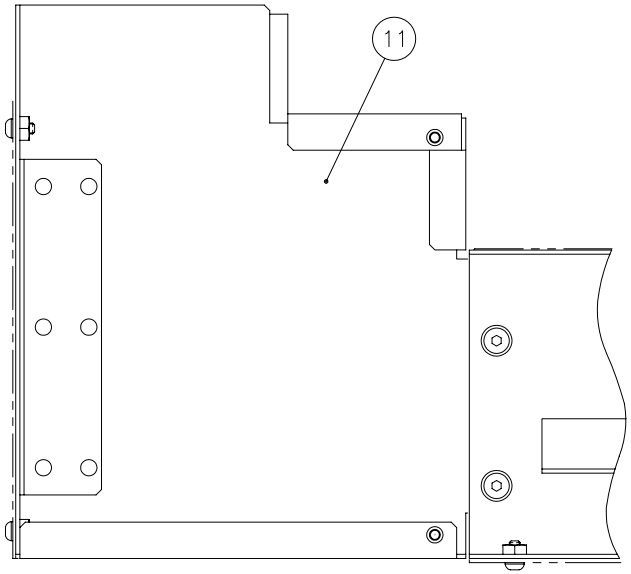

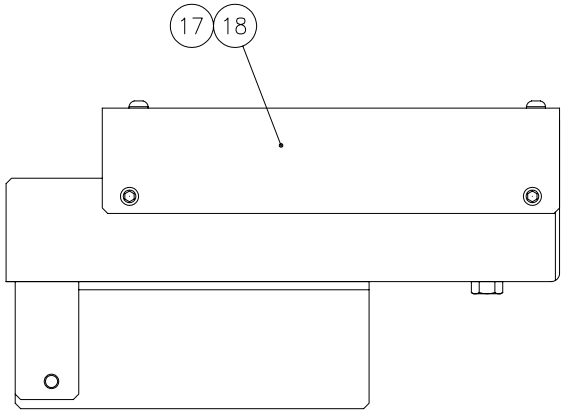

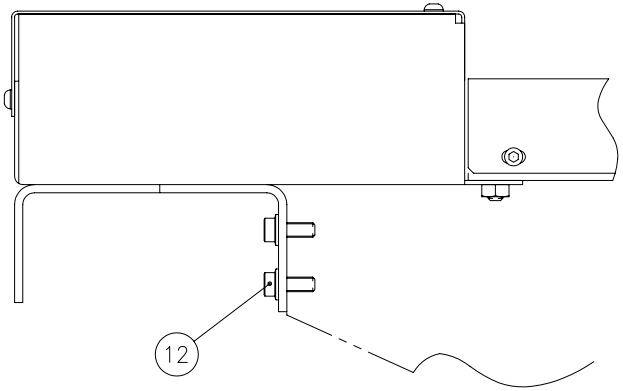

DETAIL F

6875366

Index	Code	Parts Name	Drawing No.	Type	Maker	Q'ty	Note
1	74418514	Duct (A)	6875594			1	
2	75420815	Flange Socket Bolt	P330468001	M8X20	NISSAN NEJI	1	
3	10569021	Button Head Screw	P334500019	M8X15		2	
4	79567109	Washer	P336000006	8(Regular Round)		2	
5	74418515	Duct (B)	6875595			1	
6	75420815	Flange Socket Bolt	P330468001	M8X20	NISSAN NEJI	1	
7	74418516	Duct (C)	6875596			1	
8	75420815	Flange Socket Bolt	P330468001	M8X20	NISSAN NEJI	1	
9	10569021	Button Head Screw	P334500019	M8X15		4	
10	79567109	Washer	P336000006	8(Regular Round)		4	
11	74418517	Duct (D)	6875597			1	
12	75420815	Flange Socket Bolt	P330468001	M8X20	NISSAN NEJI	2	
13	74418518	Duct Cover (A)	6875598			1	
14	74569504	Button Head Screw	7830643		MOURI	4	
15	74418519	Duct Cover (C)	6875599			1	
16	74569504	Button Head Screw	7830643		MOURI	5	
17	74418520	Duct Cover (D)	6875600			1	
18	74569504	Button Head Screw	7830643		MOURI	4	

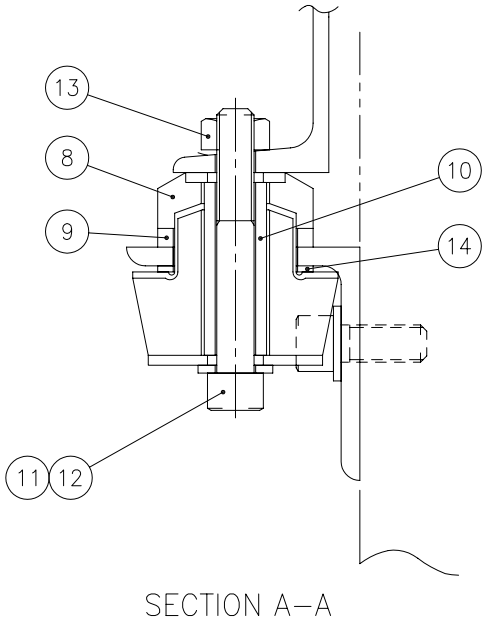

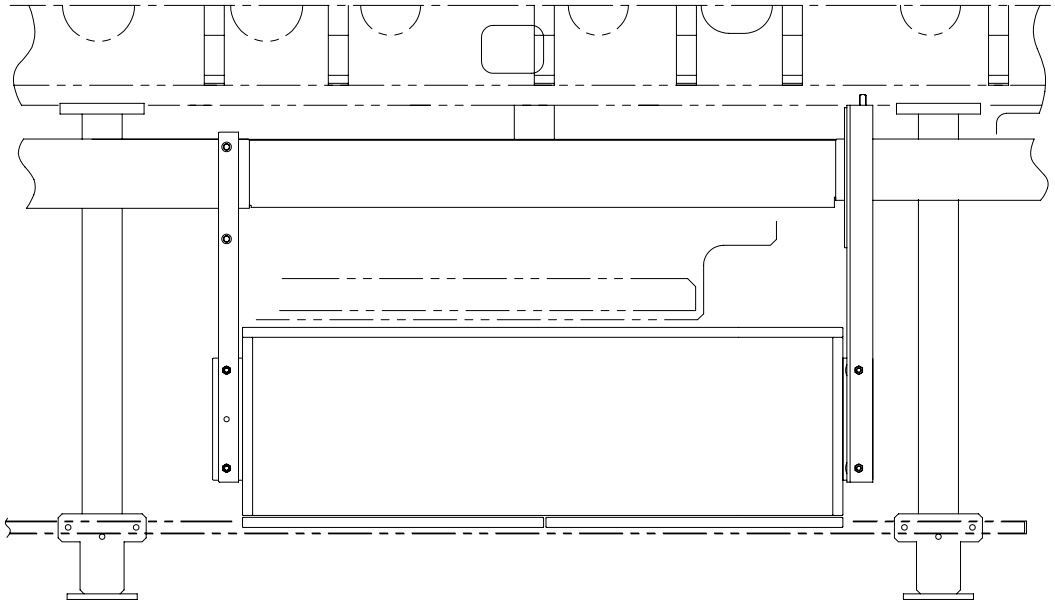

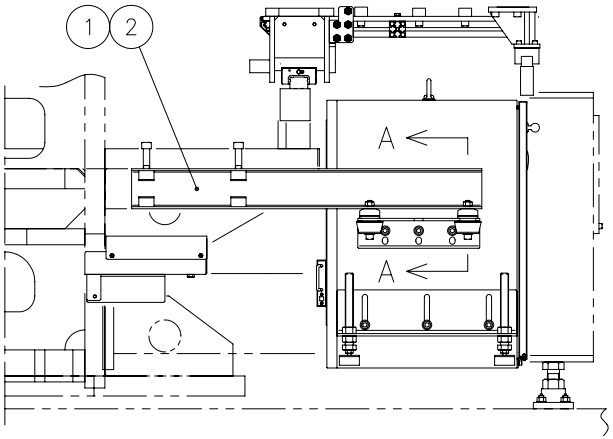

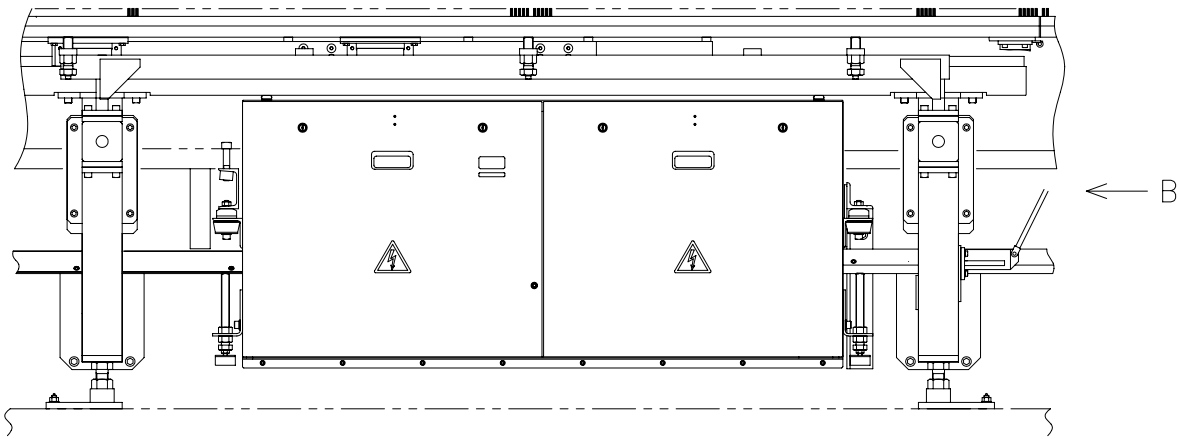

6875368A

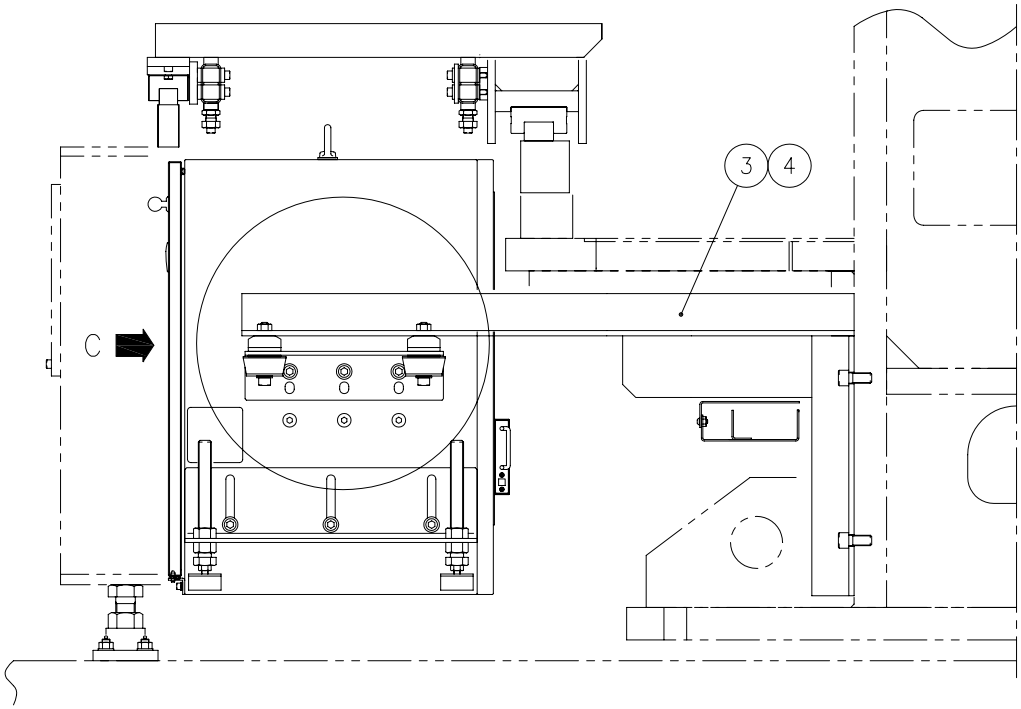

VIEW B

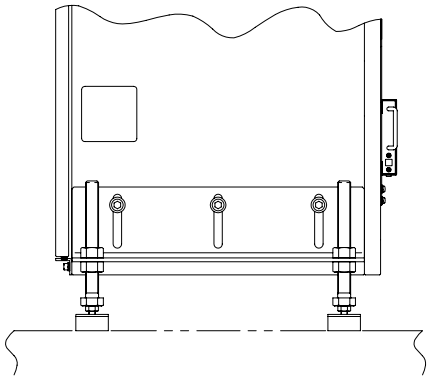

Self−stand

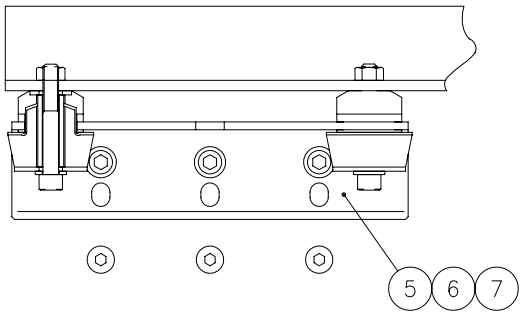

DETAIL C

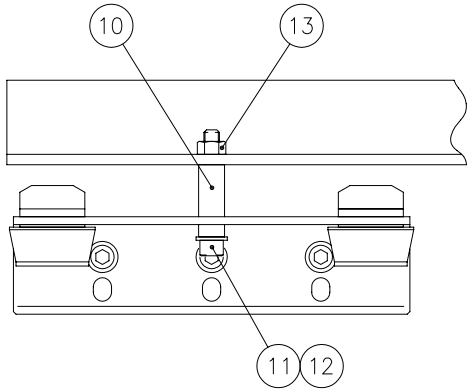

Self−stand

6875368A

From Serial No.36102001 and after

Index	Code	Parts Name	Drawing No.	Type	Maker	Q'ty	Note
1	74419255	Amplifier Box Arm (L)	6875786 A	C100X50X5		1	
2	36367712	Hex Soc Cap Screw	P330260040	M16X80		2	
3	74418522	Amplifier Box Arm (R)	6875603	L65X65X8		1	
4	44552004	Hex Soc Cap Screw	P330260031	M16X35		2	
5	74418523	Amplifier Box Bracket	6875787	L75X75X6		2	
6	36367655	Hex Soc Cap Screw	P330250005	M12X30		6	
7	86613931	Washer	P336000008	12(Regular Round)		6	
8	74732000	Vibration Isolator	P382003012	EG0001	BRIDGESTON	4	
9	74418524	Spacer (T6)	6875788			4	
10	74418525	Collar (Amplifier Box)	6875789			4	
11	52332453	Hex Soc Cap Screw	P330250016	M12X85		4	
12	86613931	Washer	P336000008	12(Regular Round)		4	
13	31183535	Nut	P332000007	M12		4	
14	74418526	Spacer (T2)	6875784			4	

From Serial No.36102001 and after

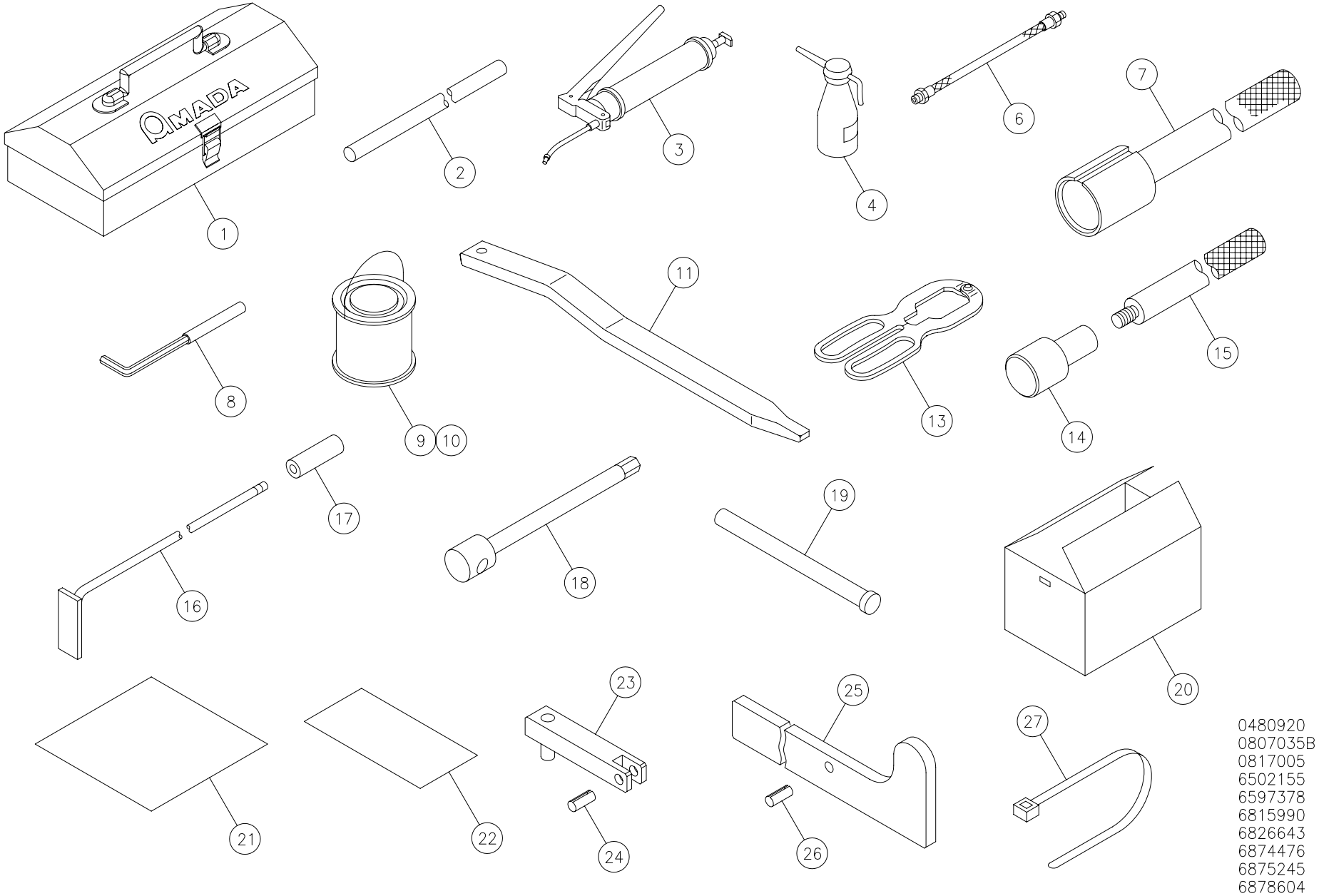

Standard Accessory(1) From Serial No.36102001 and after

Index	Code	Parts Name	Drawing No.	Type	Maker	Q'ty	Note
1	74419137	Tool Box	P370100002	T-3	Oura Kogyo	1	
2	74713281	Copper Pipe	P120100001	C3604BD-D25X300		1	
3	74713369	Grease Gun	P359308004	GP-200	DAIYA SEIKO	1	
4	74093114	Oiler	P359108002	H-250	NIPPEI	1	
5	74523002	Quick Connect Joint	P589026013	20PH	NITTO KOHKI	1	List Only
6	71675639	Nozzle Pipe	P560478002	SPK-3C	YAMADA	1	
7	74353204	Upper Guide 1-1/4"	0827492			1	
8	74375726	Spanner	0827132			1	
9		Paint	P237000001	0.5L		1	10YR2/0.34
10		Paint	P237000002	0.5L		1	
11	74375861	Removal Jig (for Die Spacer)	6018124			1	
12	74713250	Magnet Lifter	P359908001	KC-3-B	IT Engineering	1	List Only
13	74562365	QS Plier	7830484	NO.911910	AMT	1	
14	74375809	Die Guide Bar	0480908			1	
15	74375811	Die Guide (1-1/4")	0480910			1	
16	74320515	Scrap Receiver	0817006			1	
17	74514027	Knob	P317264001	BG6	IMAO Mfg	1	
18	74388842	Wrench	0480921 A			1	
19	74320530	Shaft	0480922			1	

Standard Accessory(1) From Serial No.36102001 and after

Index	Code	Parts Name	Drawing No.	Type	Maker	Q'ty	Note
20	74566236	Corrugated Cardboard Box	P370600004	1250X700X700(with Pallet)	NIPPAKU	2	
21	74415671	Plate (for Measurement)(1)	6826655			2	
22	74415672	Plate (for Measurement)(2)	6826656			1	
23	74565567	Arm	0807036 B			1	
24	74716162	Parallel Pin	P337048007	LC-D6X20	NITTO SEIKO	1	
25	74320545	Lever	0807037 B			1	
26	74716164	Parallel Pin	P337048002	LC-G5X12	NITTO SEIKO	1	
27	74307822	Cable Band	P381058013	CV-200N	SHIBAKEI	5	

Standard Accessory(2)-1/3 <Shipping Bracket Setting>

From Serial No.36102001 and after

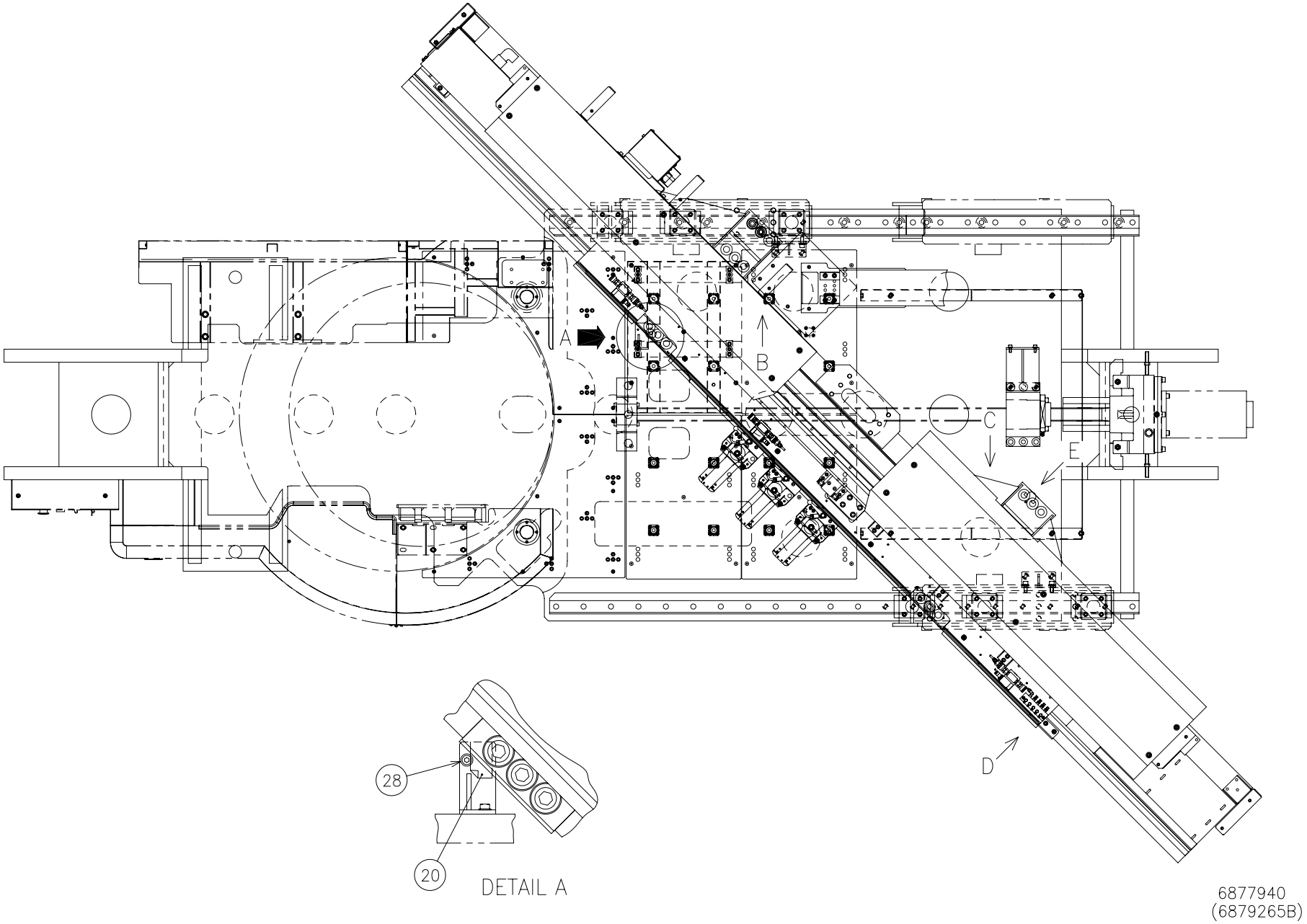

Standard Accessory(2)-2/3 <Shipping Bracket Setting>

From Serial No.36102001 and after

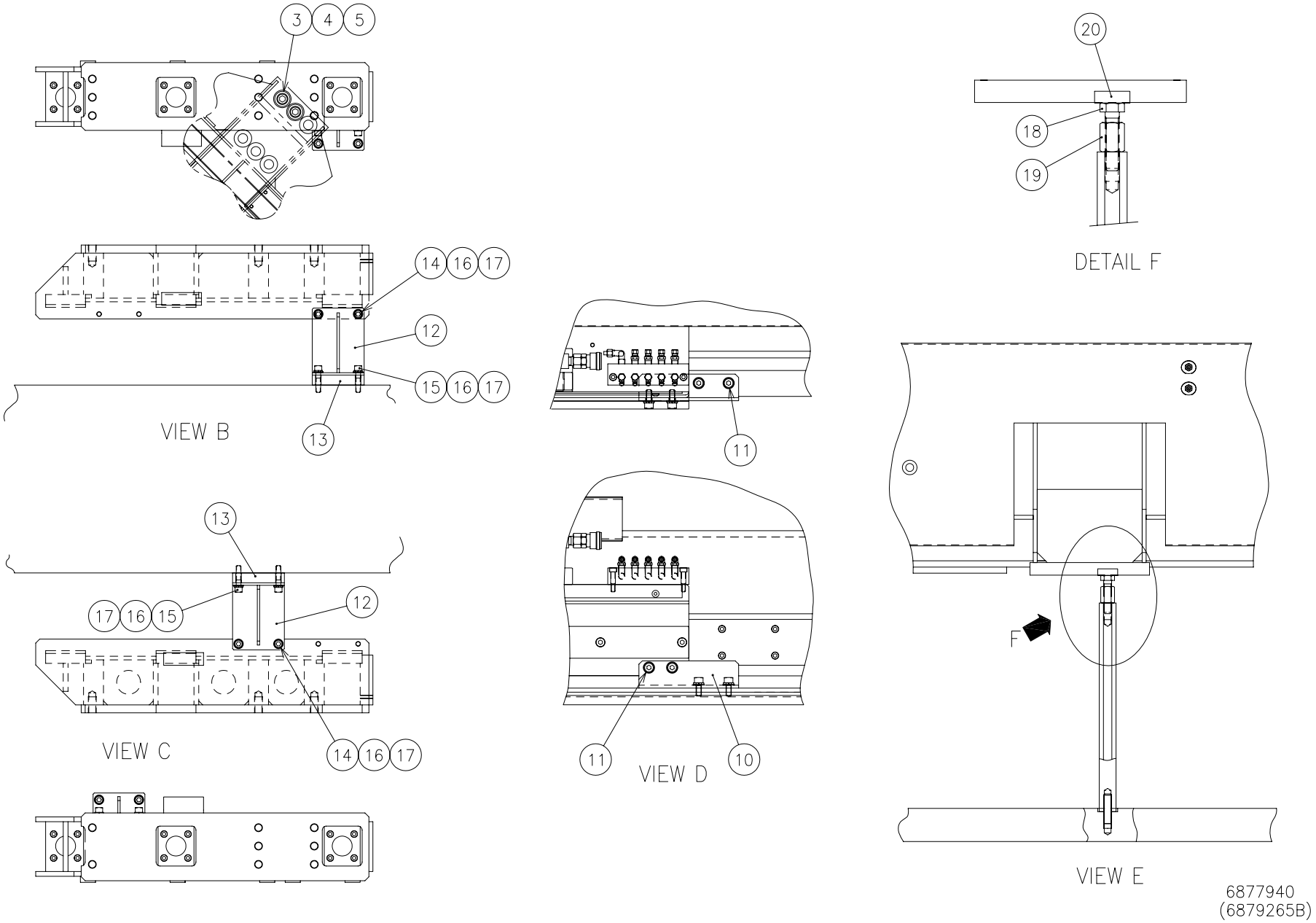

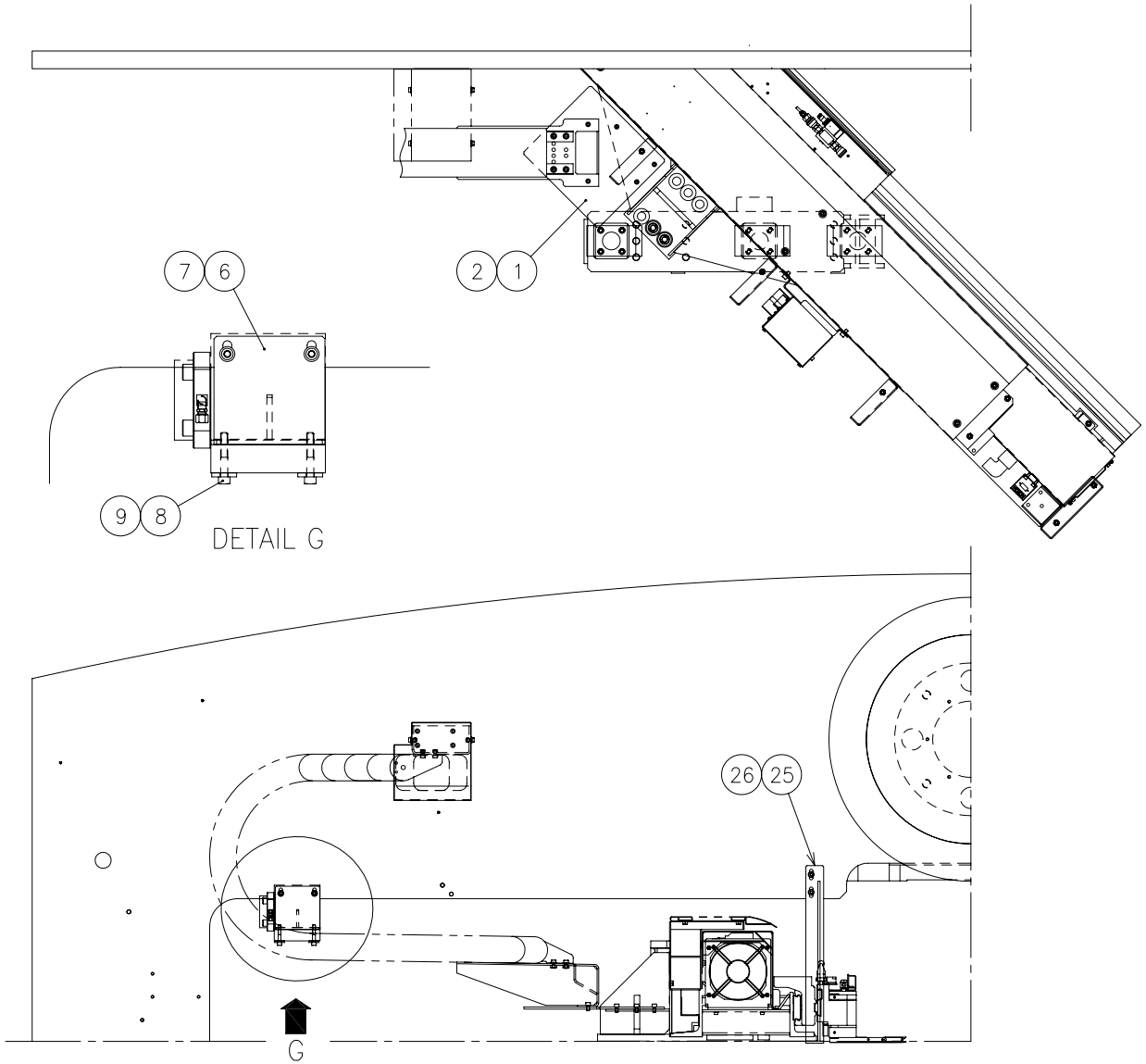

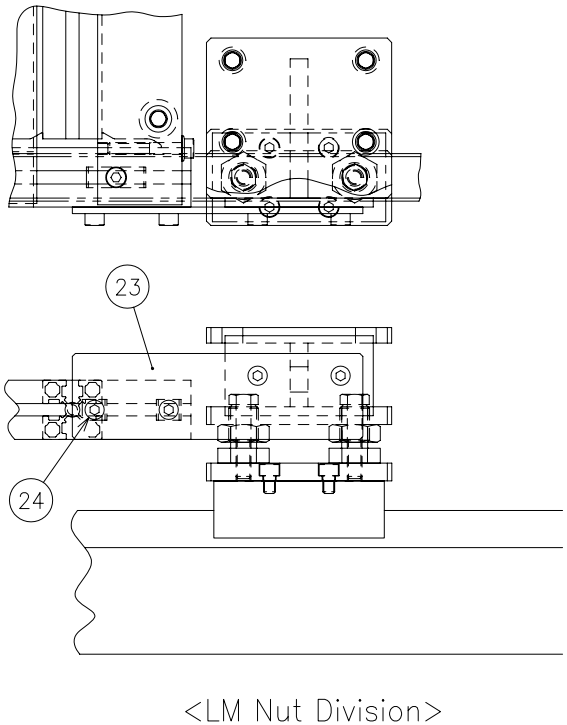

6877940
(6879265B)

Standard Accessory(2) From Serial No.36102001 and after

Index	Code	Parts Name	Drawing No.	Type	Maker	Q'ty	Note
1	74415975	Bracket (Y Hose)	6828626			1	
2	74382078	Flange Socket Bolt	P330468006	M8X15	NISSAN NEJI	5	
3	79316138	Hex Soc Cap Screw	P330260033	M16X45		2	
4	79566731	Spring Washer	P336050010	16		2	
5	74302325	Quenching Washer (M16)	0811632 A			2	
6	74415675	Bracket (Y)	6828612			1	
7	74382078	Flange Socket Bolt	P330468006	M8X15	NISSAN NEJI	2	
8	10443146	Hex Soc Cap Screw	P330230012	M8X50		2	
9	74415676	Washer	6140755			2	
10	74417447	Bracket (X-Carriage)	6873396			1	
11	74382078	Flange Socket Bolt	P330468006	M8X15	NISSAN NEJI	4	
12	74415678	Bracket (Support Bracket)	6828613			2	
13	74418527	Shipping Y Spacer	6829519			2	
14	36367655	Hex Soc Cap Screw	P330250005	M12X30		4	
15	74304914	Hex Soc Cap Screw	P330250010	M12X55		4	
16	86610819	Spring Washer	P336050008	12		8	
17	86613931	Washer	P336000008	12(Regular Round)		8	
18	74417448	Adjustable Bolt	6874474			1	
19	74417449	Long Type Nut	P332160002	M12-19(H25)		1	

Standard Accessory(2) From Serial No.36102001 and after

Index	Code	Parts Name	Drawing No.	Type	Maker	Q'ty	Note
20	74417450	Shim (Shipping)	6874475			2	
21	74418528	Stud (Shipping)	6875523	H22		1	List Only
22	74386882	Socket Set Screw	P330550118	M12X45(Flat-end)		1	List Only
23	74417451	Shipping Bracket (Table)	6875721			2	
24	79565423	Hex Soc Cap Screw	P330230004	M8X15		8	
25	74418529	Shipping Bracket (C/B)	6877941			1	
26	75420815	Flange Socket Bolt	P330468001	M8X20	NISSAN NEJI	2	
27	75428630	Flange Socket Bolt	P330468007	M6X20	NISSAN NEJI	1	List Only
28	75428708	Flange Socket Bolt	P330468015	M6X10	NISSAN NEJI	1	

Standard Accessory(3) <Base Plate>

From Serial No.36102001 and after

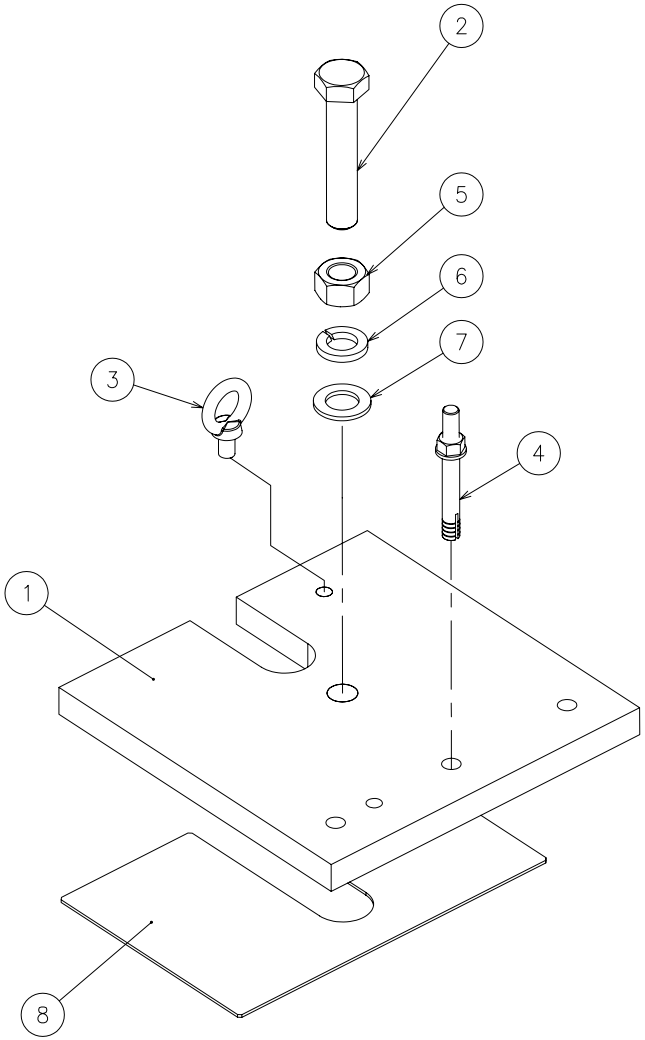

6874478

Unit No. 57

Standard Accessory(3) From Serial No.36102001 and after

Index	Code	Parts Name	Drawing No.	Type	Maker	Q'ty	Note
1	74417250	Base Plate (T32)	6874479			4	
2	74570081	Bolt	P330090023	M30X160(All-thread)		4	
3	73117631	Eye-Bolt	P338000003	M16		2	
4	74564192	Anchor	P338213003	C-1615	SANKO Technology	12	
5	74320426	Nut	P332000012	M30		4	
6	74382052	Spring Washer	P336050015	30		4	
7	74713272	Washer	P336000016	30(Regular Round)		4	
8	74419091	Shim	6874486 A			1	

Standard Accessory(4) <Step Plate>

From Serial No.36102001 and after

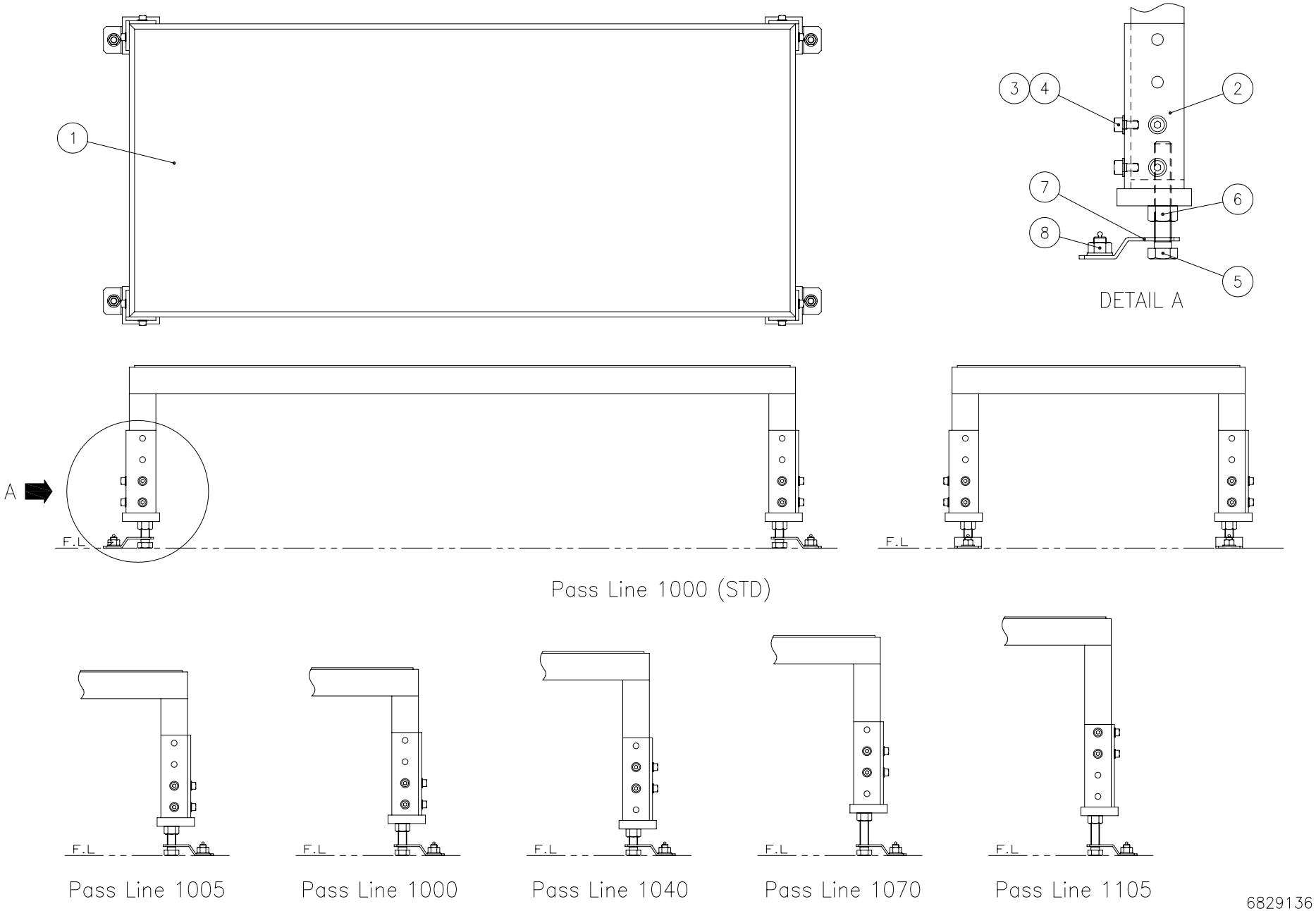

Unit No. 58

Standard Accessory(4) From Serial No.36102001 and after

Index	Code	Parts Name	Drawing No.	Type	Maker	Q'ty	Note
1	74417452	Step Plate	6829137	L50X50X6		1	
2	74417453	Adjustment Leg	6829138			4	
3	79565423	Hex Soc Cap Screw	P330230004	M8X15		16	
4	79567109	Washer	P336000006	8(Regular Round)		16	
5	74413108	Bolt	P330060037	M16X100(All-thread)		4	
6	31183536	Nut	P332000009	M16		4	
7	74417454	Accessory For Level Adjuster	P384082005	KC-275-C-3	TAKIGEN	4	
8	31171302	Anchor	P338213009	C-1270	SANKO Technology	4	

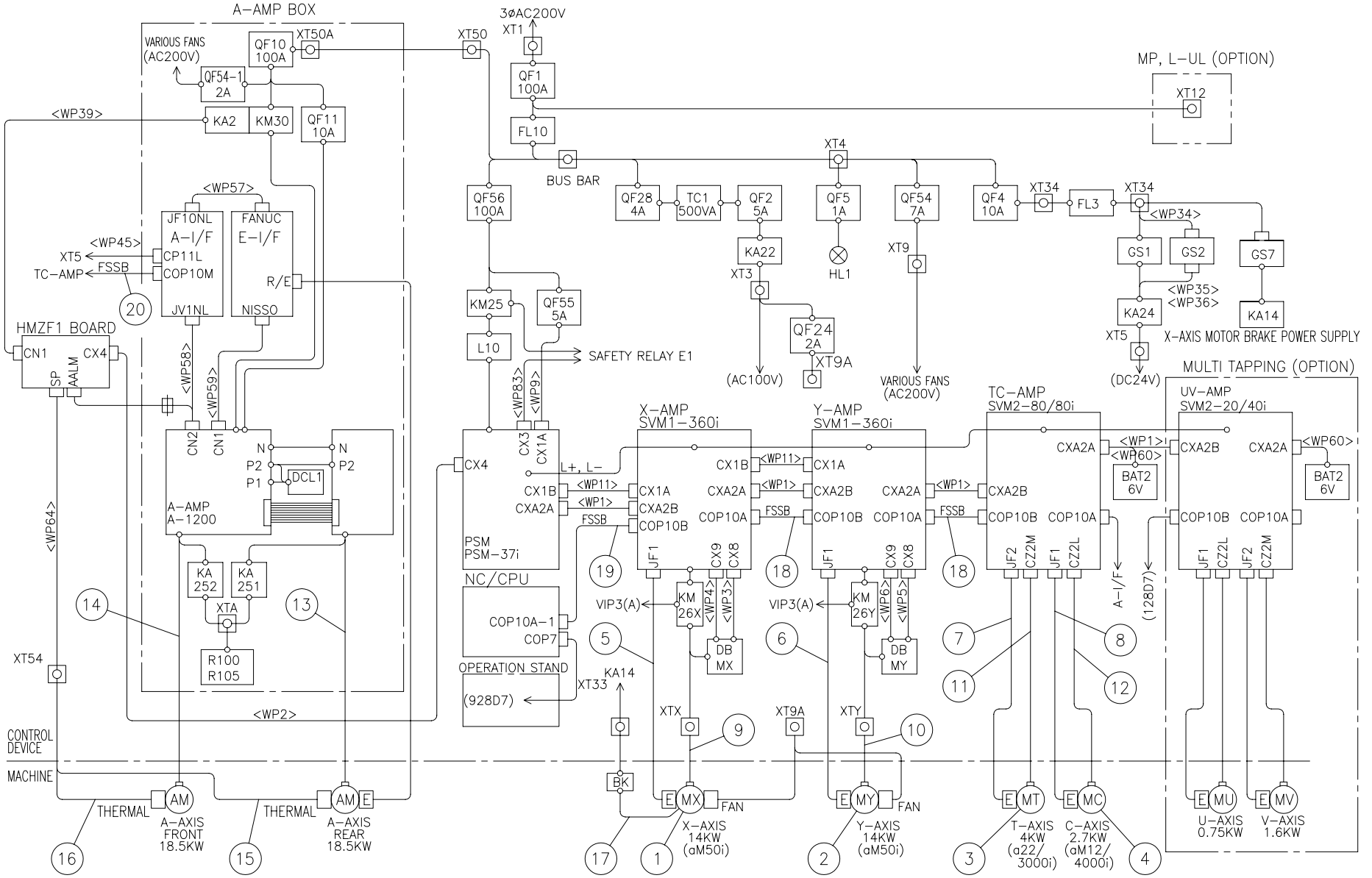
A-AMP BOX
VARIOUS FANS (AC200V)
QF10 100A
XT50A
XT50
QF54-1 2A
KA2
KM30
QF11 10A
<WP39>
<WP57>
JF10NL
A-I/F
CP11L
COP10M
JV1NL
FANUC
E-I/F
R/E
NISSO
<WP45>
XT5
TC-AMP
FSSB
20
HMZF1 BOARD
CN1
CX4
SP
AALM
<WP58>
<WP59>
CN2
CN1
N
P2
P1
DCL1
A-AMP
A-1200
KA 252
KA 251
XTA
R100
R105
14
13
XT54
<WP64>
<WP2>
CONTROL DEVICE
MACHINE
THERMAL
AM
A-AXIS FRONT 18.5KW
E
A-AXIS REAR 18.5KW
16
15
3ØAC200V
XT1
QF1 100A
FL10
BUS BAR
QF56 100A
KM25
L10
QF55 5A
SAFETY RELAY E1
<WP83>
<WP9>
CX3
CX1A
PSM
PSM-37i
NC/CPU
COP10A-1
COP7
OPERATION STAND
(928D7)
KA14
XT33
BK
MP, L-UL (OPTION)
XT12
XT4
QF28 4A
TC1 500VA
QF2 5A
QF5 1A
QF54 7A
QF4 10A
XT34
FL3
<WP34>
KA22
XT3
HL1
XT9
QF24 2A
XT9A
(AC100V)
VARIOUS FANS (AC200V)
GS1
GS2
GS7
<WP35>
<WP36>
KA24
KA14
X-AXIS MOTOR BRAKE POWER SUPPLY
(DC24V)
MULTI TAPPING (OPTION)
X-AMP
SVM1-360i
Y-AMP
SVM1-360i
TC-AMP
SVM2-80/80i
UV-AMP
SVM2-20/40i
L+, L-
CX1B
CXA2A
<WP11>
<WP1>
CX1A
CXA2B
COP10B
COP10A
JF1
CX9
CX8
19
18
VIP3(A)
KM 26X
KM 26Y
<WP4>
<WP3>
<WP6>
<WP5>
DB MX
DB MY
5
6
7
8
11
12
JF2
CZ2M
CZ2L
A-I/F
(128D7)
<WP60>
BAT2 6V
XTX
XT9A
XTY
9
10
FAN
MX
MY
MT
MC
MU
MV
X-AXIS 14KW (αM50i)
Y-AXIS 14KW (αM50i)
T-AXIS 4KW (α22/3000i)
C-AXIS 2.7KW (αM12/4000i)
U-AXIS 0.75KW
V-AXIS 1.6KW
17
1
2
3
4

670779127

Index	Code	Parts Name	Drawing No.	Type	Maker	Q'ty	Note
1	74417455	Servo Motor	P714018193	A06B-0275-B401	FANUC	1	MX
2	74417456	Servo Motor	P714018173	A06B-0275-B101	FANUC	1	MY
3	74571250	A22I	P767485247	A06B-0247-B200	FANUC	1	MT/Accessory For Program Controller
4	74417457	AM12I	P767485246	A06B-0238-B000	FANUC	1	MC/Accessory For Program Controller
5	74419256	X Signal Cable (JF1(X))	670838201A			1	
6	74419257	Y Signal Cable (JF1(Y))	670838202A			1	
7	74419258	T Signal Cable (JF2(T))	670838203A			1	
8	74419259	C Signal Cable (JF1(C))	670838204A			1	
9	74419260	X-axis Motor Cable (X)	670838205B			1	
10	74419261	Y Motor Cable (Y)	670838206A			1	
11	74419262	T Motor Cable (T)	670838207A			1	
12	74419263	C Motor Cable (C)	670838208A			1	
13	74419264	P Motor Cable (PA)	670838215A			1	
14	74419265	P Motor Cable (PB)	670838216A			1	
15	74419266	Cable (THA)	670838213A			1	
16	74419267	Cable (THB)	670838214A			1	
17	74419268	X-axis Brake Cable (X-BK)	670838217A			1	
18	74567386	Optical Fiber Cable	P345008006	A02B-0236-K852	FANUC	2	
19	74417460	Optical Fiber Cable	P345008007	A02B-0236-K853	FANUC	1	

Index	Code	Parts Name	Drawing No.	Type	Maker	Q'ty	Note
20	74418543	Optical Fiber Cable	P345008012	A66L-6001-0026#L10R03	FANUC	1	
21	71516397	Cable Clamp	P767485035	A02B-0124-K001	FANUC	2	Accessory (List Only)
22	74571706	Pen	P767485131	A02B-0236-K111	FANUC	1	Accessory For Program Controller (List Only)
23	71376277	Fuse	P842068017	A02B-0236-K100	FANUC	2	Accessory (List Only)
24	74568831	Fuse	P842068018	A02B-0265-K101	FANUC	1	Accessory (List Only)
25	71376278	Fuse	P842068023	A03B-0815-K001	FANUC	5	Accessory (List Only)
26	71367153	Fuse	P842068026	A06B-6077-K250	FANUC	4	Accessory (List Only)
27	71367154	Fuse	P842068025	A06B-6073-K250	FANUC	4	Accessory (List Only)
28		NC Manual	P767485346	B-63525EN	FANUC	1	Accessory (List Only)
29	71515735	Protection Sheet	P767485409	A08B-0082-K020	FANUC	1	Accessory (List Only)
30	74568833	Dummy Connector	670152569			1	Accessory (List Only)
31	71515746	Floppy Disk	P379008002	MF-HD18 DOS Format	MAXELL	5	Accessory (List Only)
32	74417461	Fuse	P842098007	MP32	DAITO Communication	5	Accessory (List Only)
33	74417462	Cleaning Kit	P379858002	CD-R56L	SANWA SUPPLY	1	Accessory (List Only)
34	36163868	Cleaning Kit	P379858001	CD-31W	SANWA SUPPLY	1	Accessory (List Only)
35	74417463	CD-ROM	P379838001	CDR74ZPWS	imation	2	Accessory (List Only)
36	71515741	Keyboard	P618108003	JPZ-104	MITSUMI Electric	1	Accessory (List Only)
37	71517468	Accessory for Computer	P767788017	FA-MULT1	SANWA SUPPLY	1	Accessory (List Only)

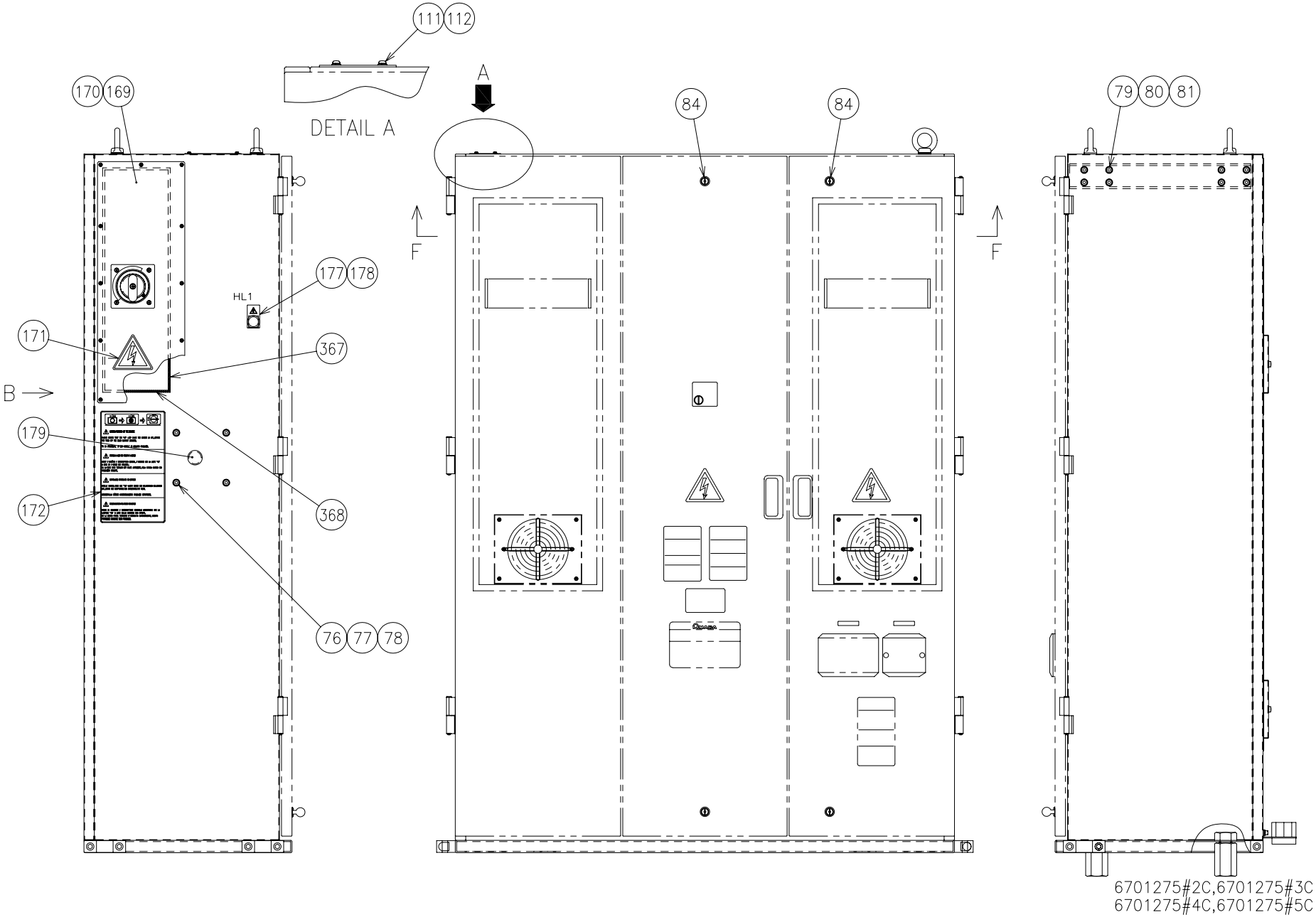
111
112
DETAIL A
A
170
169
84
84
79
80
81
F
F
177
178
HL1
171
367
B
179
172
368
76
77
78
6701275#2C,6701275#3C
6701275#4C,6701275#5C

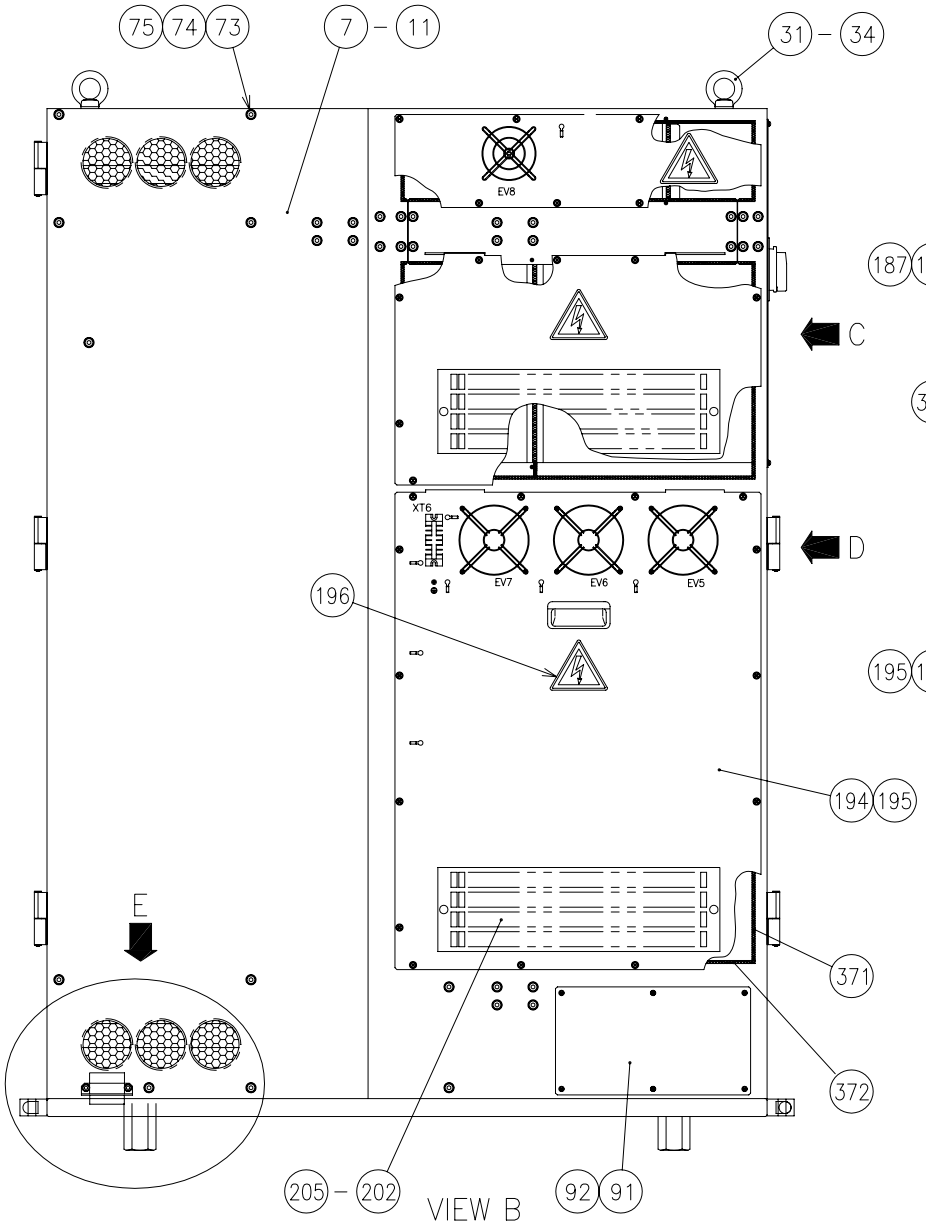

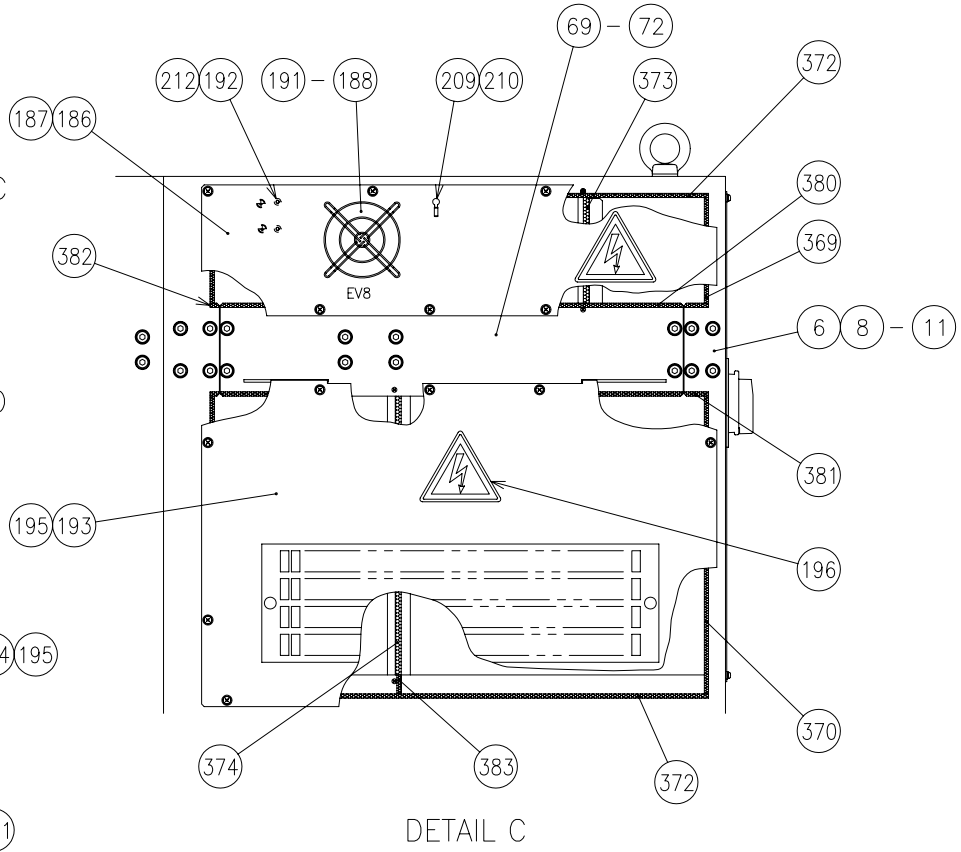

6701275#2C
6701275#3C
6701275#4C
6701275#5C

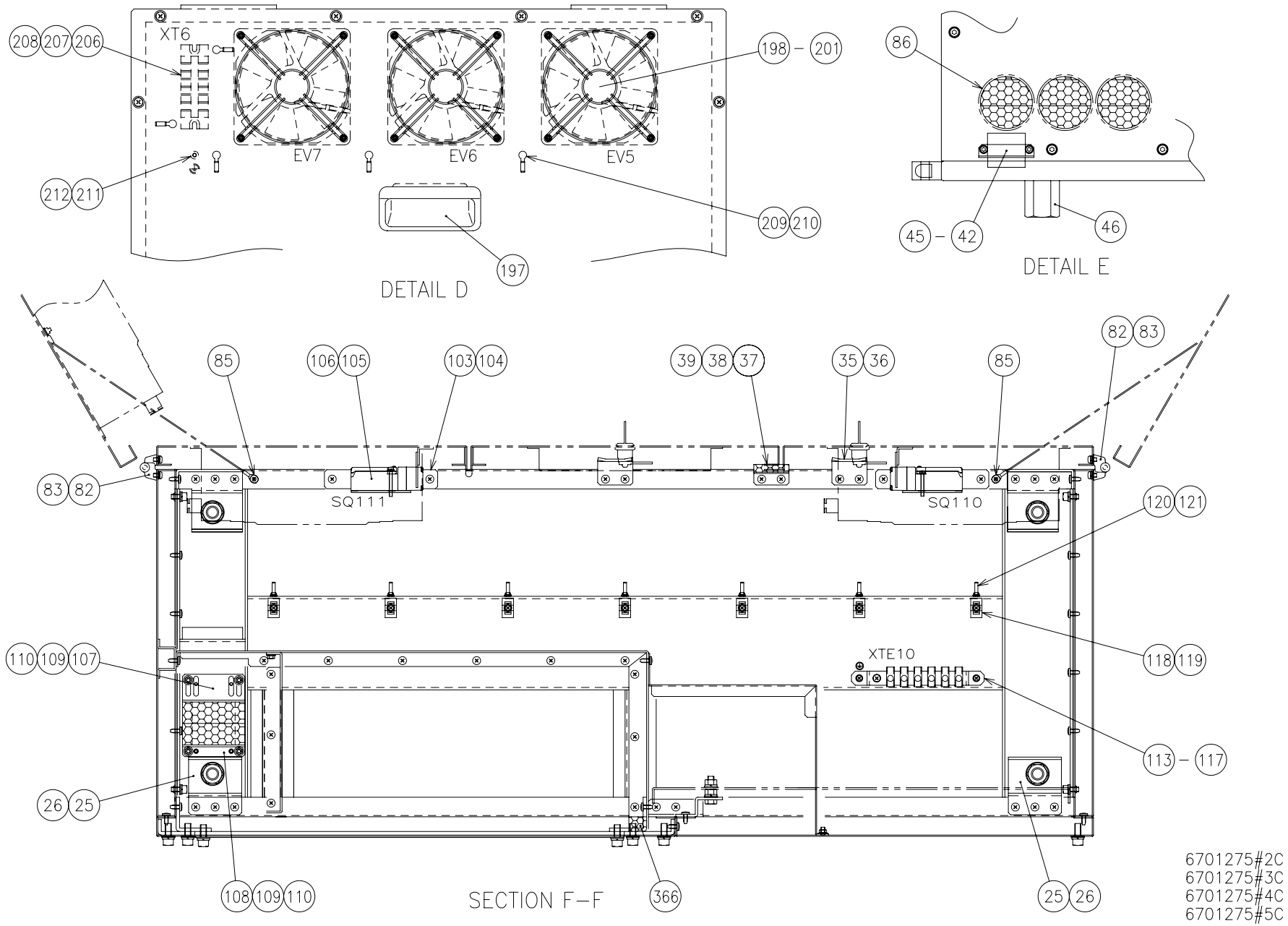
XT6
EV7
EV6
EV5
208 207 206
198 – 201
212 211
209 210
197
DETAIL D
86
45 – 42
46
DETAIL E
85
106 105
103 104
39 38 37
35 36
85
82 83
83 82
SQ111
SQ110
120 121
110 109 107
XTE10
118 119
113 – 117
26 25
108 109 110
SECTION F–F
366
25 26
6701275#2C
6701275#3C
6701275#4C
6701275#5C

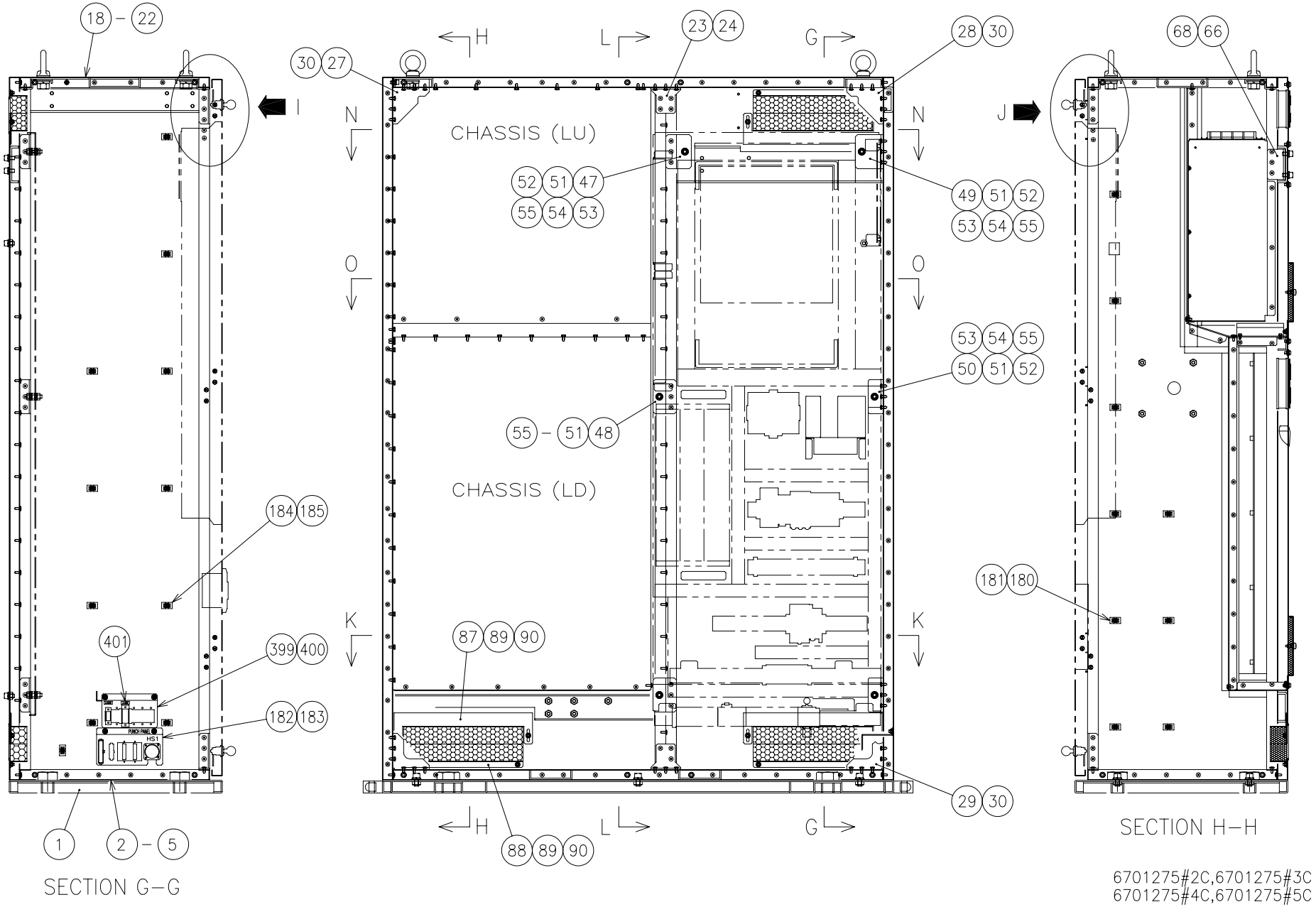
18 – 22
30 27
H
L
23 24
G
28 30
68 66
I
N
CHASSIS (LU)
52 51 47
55 54 53
49 51 52
53 54 55
J
O
53 54 55
50 51 52
55 – 51 48
CHASSIS (LD)
184 185
181 180
K
87 89 90
401
399 400
182 183
29 30
1
2 – 5
88 89 90
SECTION G–G
SECTION H–H
6701275#2C,6701275#3C
6701275#4C,6701275#5C

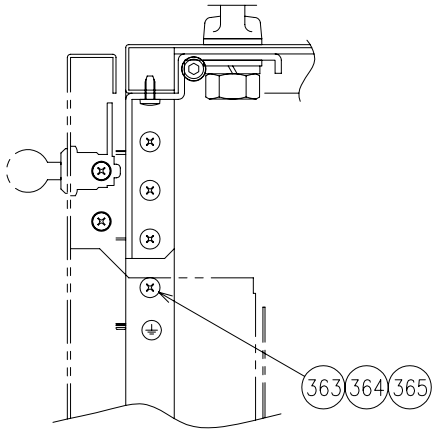

DETAIL I

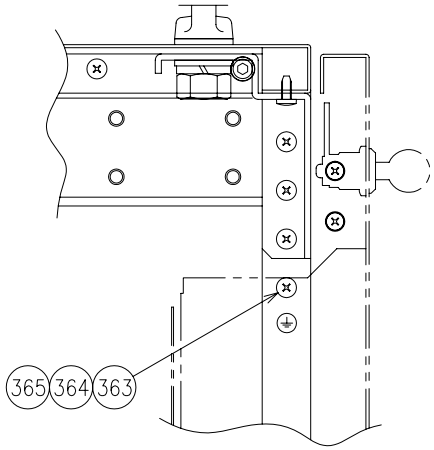

DETAIL J

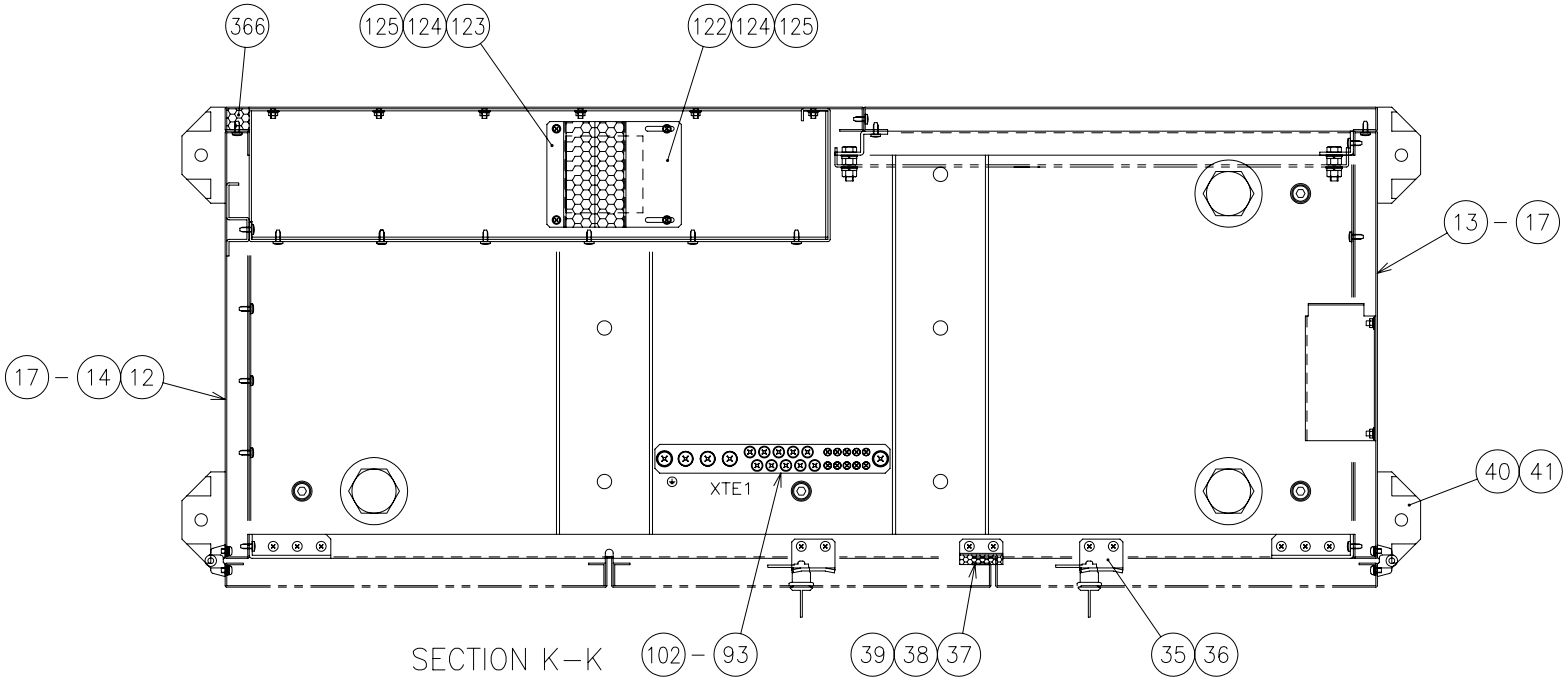

SECTION K–K

6701275#2C
6701275#3C
6701275#4C
6701275#5C

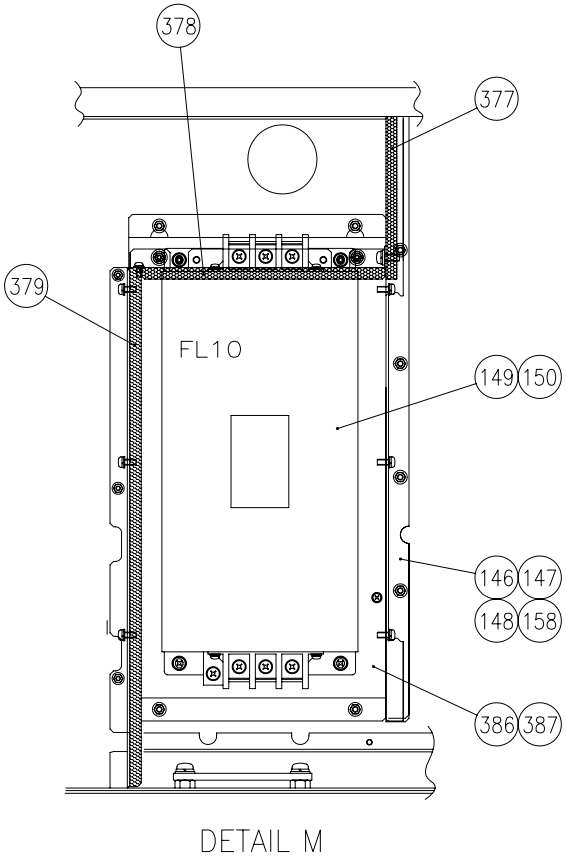

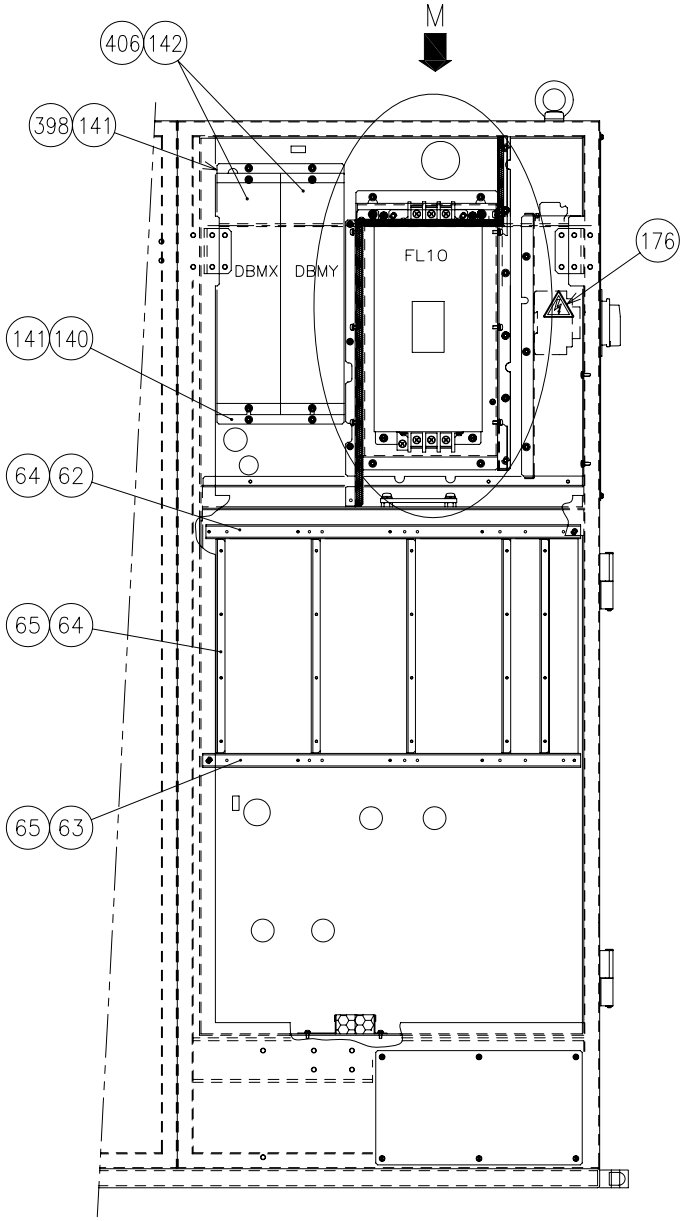

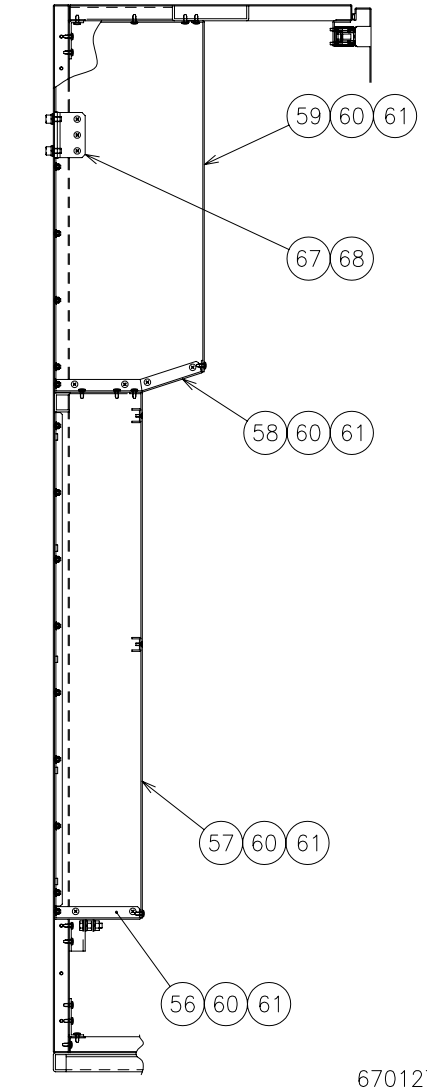

6701275#2C
6701275#3C
6701275#4C
6701275#5C

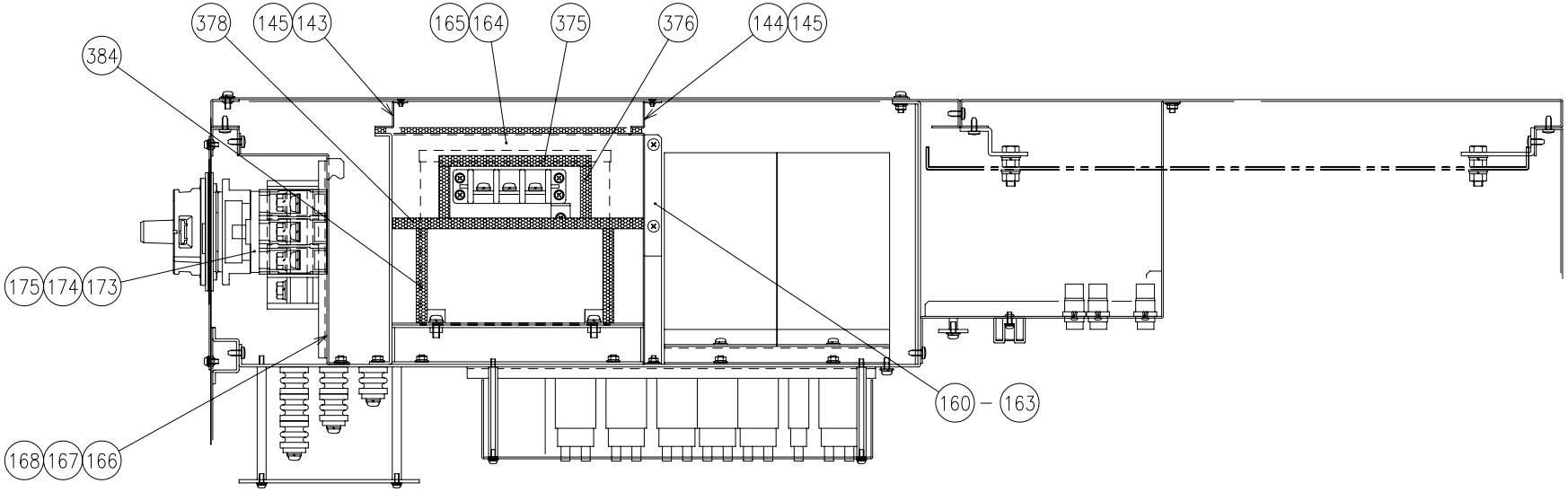

SECTION N–N

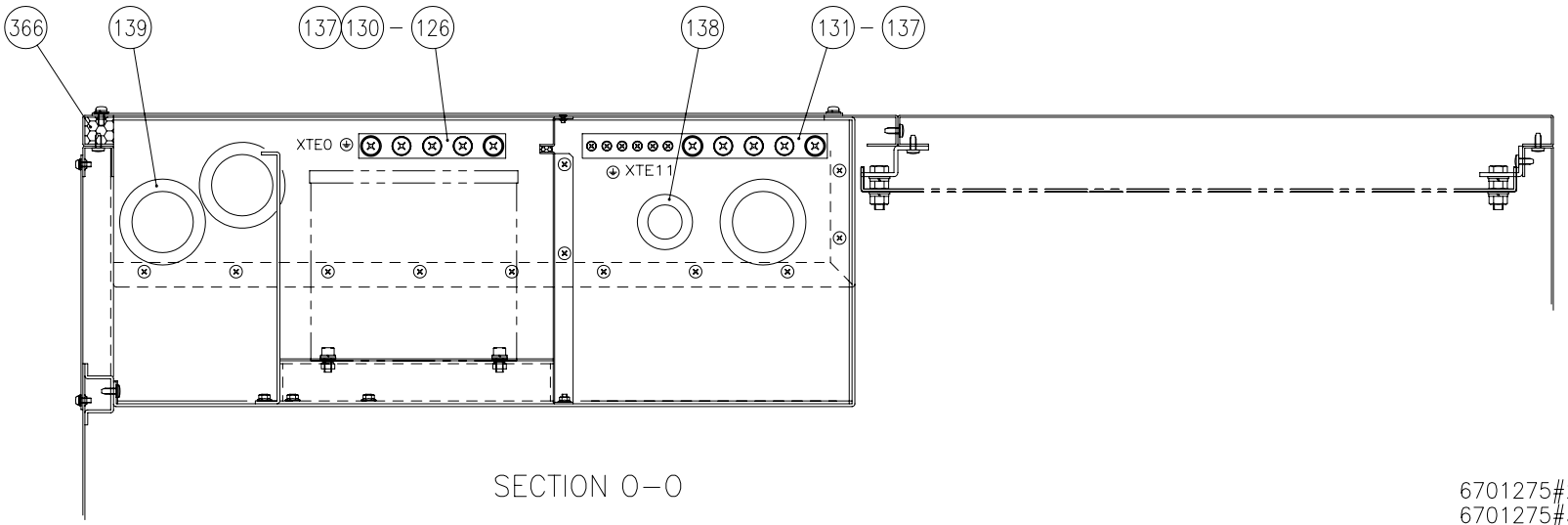

SECTION O–O

6701275#2C
6701275#3C
6701275#4C
6701275#5C

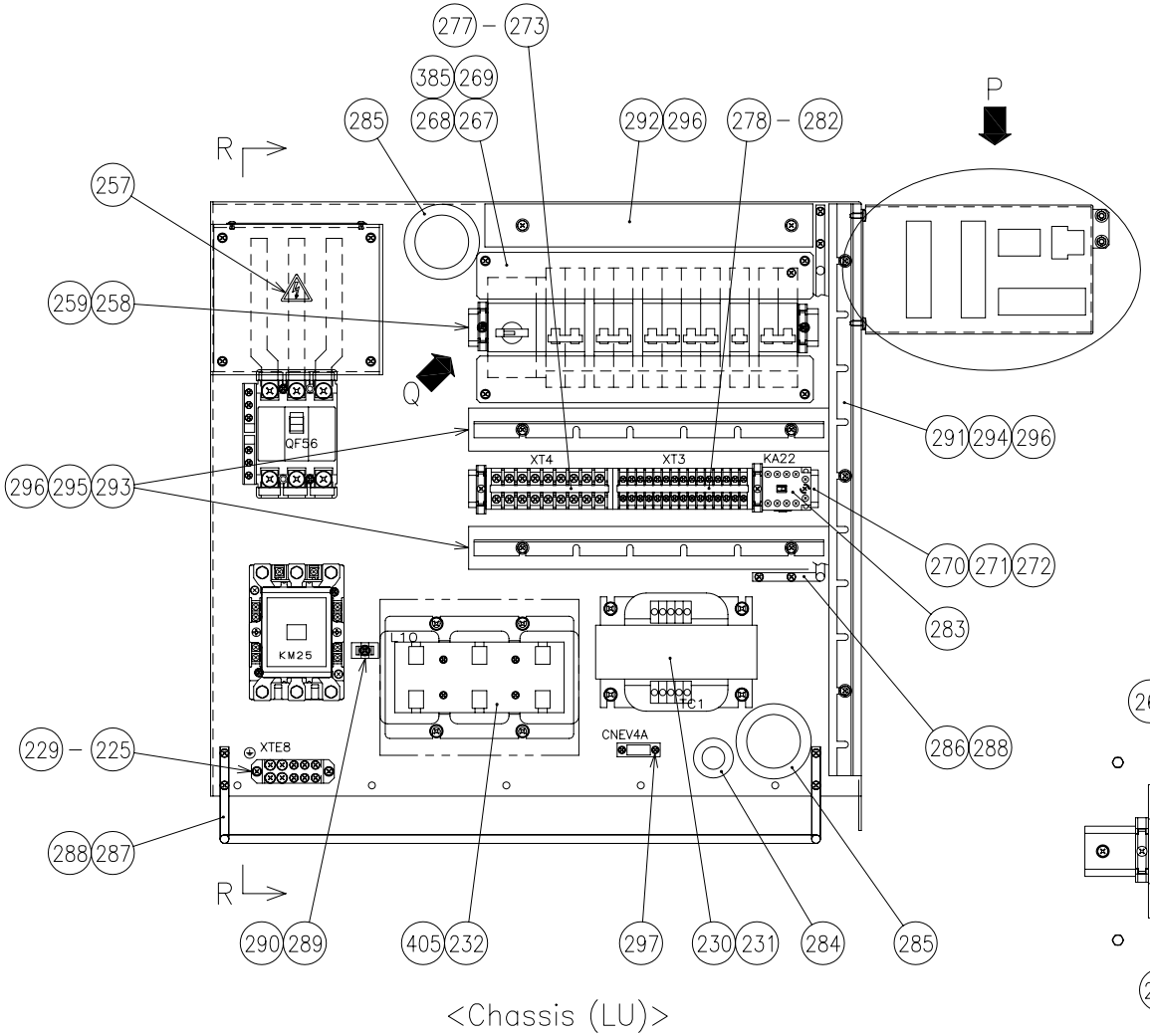

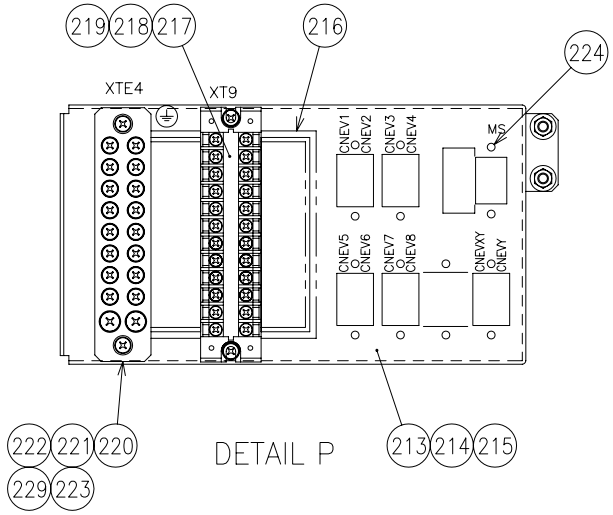

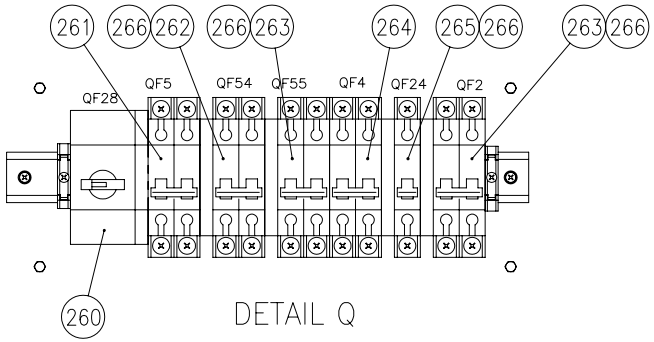

6701275#2C
6701275#3C
6701275#4C
6701275#5C

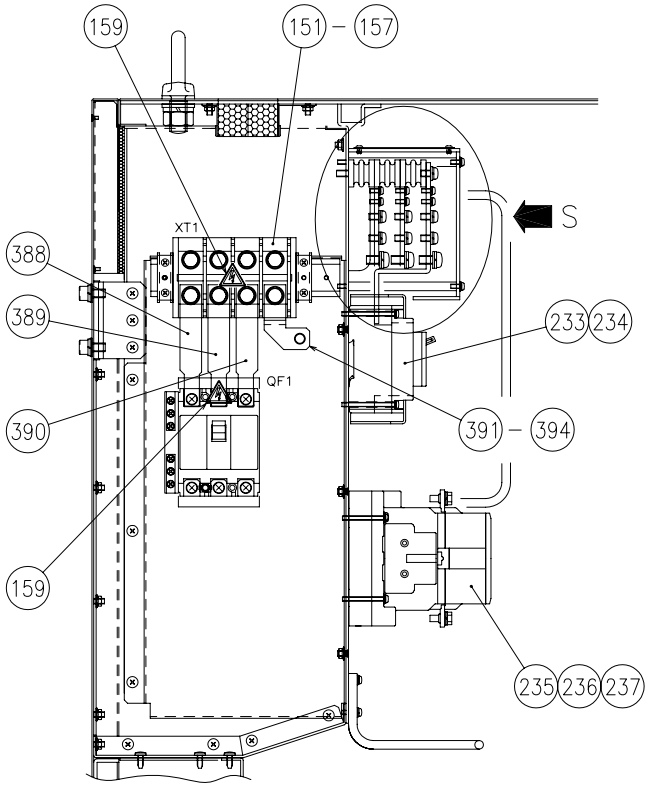

SECTION R–R

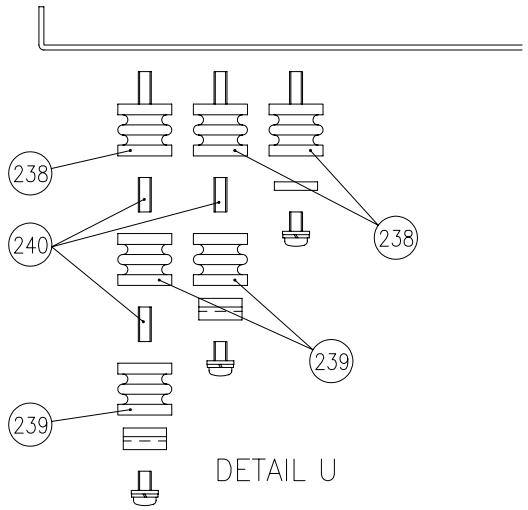

DETAIL U

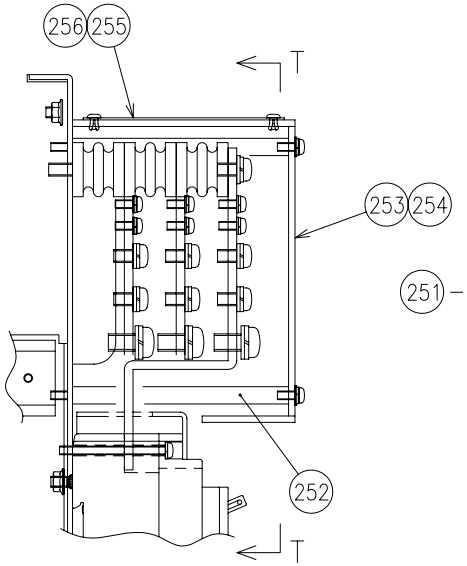

DETAIL S

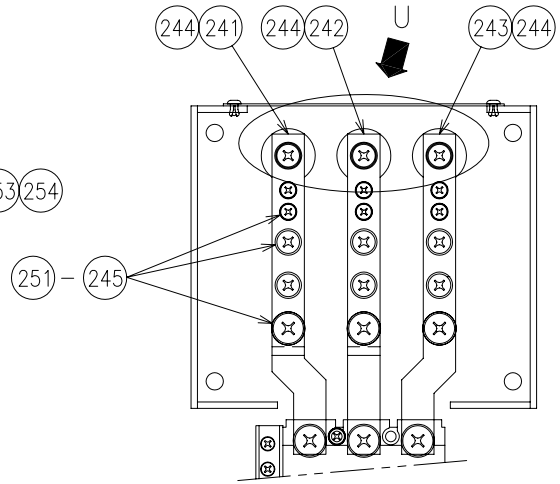

SECTION T–T

6701275#2C
6701275#3C
6701275#4C
6701275#5C

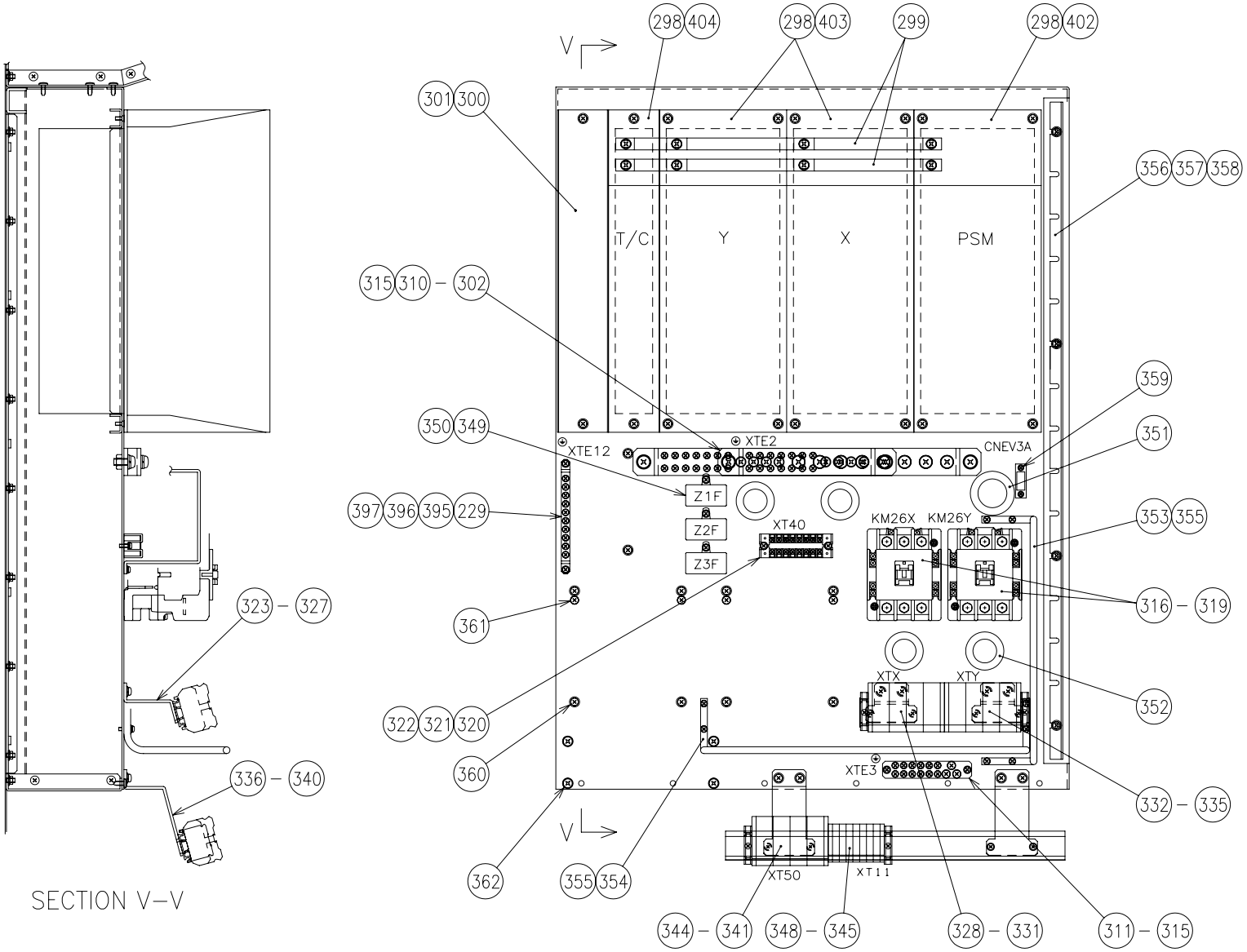

6701275#2C
6701275#3C
6701275#4C
6701275#5C

Index	Code	Parts Name	Drawing No.	Type	Maker	Q'ty	Note
1	74571505	Base	6700200			1	
2	74418544	Bottom Plate (G3)	6700687			1	
3	86611904	Hex Soc Cap Screw	P330240006	M10X20		6	
4	75429270	Spring Washer	P336050050	10(Black Chromate)		6	
5	74418545	Washer	P336000110	10(Polished Round)		6	Black Chromate
6	74419269	Rear Plate (G3L)	6700757 A			1	
7	74419270	Rear Plate (G3R)	6700758 A			1	
8	36527154	Hex Soc Cap Screw	P330220007	M6X16		4	
9	36387467	Spring Washer	P336050048	6(Black Chromate)		4	
10	36387468	Washer	P336000107	6(Polished Round)		4	Black Chromate
11	74577573	Pan Head Screw	P335030013	Bind-Type-2-5X12(Chromate)		33	
12	74418548	Side Plate (G3L)	6700699 A			1	
13	74419271	Side Plate (G3R)	6700756 B			1	
14	36527154	Hex Soc Cap Screw	P330220007	M6X16		4	
15	36387467	Spring Washer	P336050048	6(Black Chromate)		4	
16	36387468	Washer	P336000107	6(Polished Round)		4	Black Chromate
17	74577573	Pan Head Screw	P335030013	Bind-Type-2-5X12(Chromate)		52	
18	74419272	Top Plate (G3)	6700698 B			1	
19	36527154	Hex Soc Cap Screw	P330220007	M6X16		8	

Index	Code	Parts Name	Drawing No.	Type	Maker	Q'ty	Note
20	36387467	Spring Washer	P336050048	6(Black Chromate)		8	
21	36387468	Washer	P336000107	6(Polished Round)		8	Black Chromate
22	74577573	Pan Head Screw	P335030013	Bind-Type-2-5X12(Chromate)		19	
23	74418551	Corner Stay (D)	6702783			2	
24	74577573	Pan Head Screw	P335030013	Bind-Type-2-5X12(Chromate)		14	
25	74418552	Corner Stay (U)	6705705			2	
26	74577573	Pan Head Screw	P335030013	Bind-Type-2-5X12(Chromate)		6	
27	74417499	Corner Stay (U1)	6702608 B			1	
28	74417501	Corner Stay (U2)	6702609 B			1	
29	74417502	Corner Stay (B)	6702670 B			2	
30	74577573	Pan Head Screw	P335030013	Bind-Type-2-5X12(Chromate)		24	
31	74417503	Eye-Bolt	P338008011	M16X35(Chromate)	SANKO Industry	4	
32	36385075	Washer	P336000040	16(Polished Round)		8	
33	79566731	Spring Washer	P336050010	16		4	
34	31183536	Nut	P332000009	M16		4	
35	74416061	Lock Bracket	6702671			4	
36	74577573	Pan Head Screw	P335030013	Bind-Type-2-5X12(Chromate)		8	
37	74417504	Door Space	6701863 A			2	
38	74577573	Pan Head Screw	P335030013	Bind-Type-2-5X12(Chromate)		4	

Index	Code	Parts Name	Drawing No.	Type	Maker	Q'ty	Note
39	74575391	EMI Shield	P869518121	UC-300279-0.045M	KITAGAWA	2	
40	74571580	Jack Bracket	6700231			4	
41	36110743	Hex Soc Cap Screw	P330250006	M12X35		8	
42	74571579	Flexible Bracket (FO)	6701805			1	
43	36527154	Hex Soc Cap Screw	P330220007	M6X16		2	
44	36387467	Spring Washer	P336050048	6(Black Chromate)		2	
45	36387468	Washer	P336000107	6(Polished Round)		2	Black Chromate
46	74418553	Long Type Nut	6705708			4	
47	74418554	Chassis Bracket (LU)	6702776			1	
48	74418555	Chassis Bracket (LD)	6702777			2	
49	74418556	Chassis Bracket (RU)	6702778			1	
50	74418557	Chassis Bracket (RD)	6702779			2	
51	74577573	Pan Head Screw	P335030013	Bind-Type-2-5X12(Chromate)		18	
52	10442913	Bolt	P330030009	M8X35		6	
53	71368232	Spring Washer	P336050046	8(Chromate)		12	
54	74417509	Washer	P336000106	8(Polished Round)-Chromate		12	
55	74384603	Nut	P332000068	M8(Type-2)		12	
56	74418558	LD Frame (G3B)	6700922			1	
57	74419273	Chassis (G3LD)	6700838 A			1	

Index	Code	Parts Name	Drawing No.	Type	Maker	Q'ty	Note
58	74419274	LD Frame (G3C)	6700859 B			1	
59	74419275	Chassis (LU)	6700926 B			1	
60	74417737	Nut	P332238005	M5(Chromate)	SANKO Industry	26	
61	74577573	Pan Head Screw	P335030013	Bind-Type-2-5X12(Chromate)		61	
62	74418562	Reinforcement (A)	6702781 A			1	
63	74418563	Reinforcement (B)	6702782 A			1	
64	74417607	Stay (1)	6702640 B			5	
65	36500630	Flat Head Screw	P334110008	M4X10		30	
66	74419276	Rear Support Blacket (L)	6702747 A			1	
67	74419277	Rear Support Blacket (R)	6702748 B			1	
68	74577573	Pan Head Screw	P335030013	Bind-Type-2-5X12(Chromate)		6	
69	74419278	Rear Support (G3)	6700827 A			1	
70	36367621	Hex Soc Cap Screw	P330230005	M8X16		12	
71	74561978	Spring Washer	P336050049	8(Black Chromate)		12	
72	74417532	Washer	P336000108	8(Polished Round)		12	Black Chromate
73	36367621	Hex Soc Cap Screw	P330230005	M8X16		23	
74	74561978	Spring Washer	P336050049	8(Black Chromate)		23	
75	74417532	Washer	P336000108	8(Polished Round)		23	Black Chromate
76	36367621	Hex Soc Cap Screw	P330230005	M8X16		4	

Index	Code	Parts Name	Drawing No.	Type	Maker	Q'ty	Note
77	74561978	Spring Washer	P336050049	8(Black Chromate)		4	
78	74417532	Washer	P336000108	8(Polished Round)		4	Black Chromate
79	36367621	Hex Soc Cap Screw	P330230005	M8X16		8	
80	74561978	Spring Washer	P336050049	8(Black Chromate)		8	
81	74417532	Washer	P336000108	8(Polished Round)		8	Black Chromate
82	75429407	Hinge	6800745 A			6	
83	74570033	Pan Head Screw with Washer	P334200134	M5X10(Chromate P-4)		12	
84	74570033	Pan Head Screw with Washer	P334200134	M5X10(Chromate P-4)		12	
85	74577573	Pan Head Screw	P335030013	Bind-Type-2-5X12(Chromate)		2	
86	71377705	Grommet	P229125051	KG-016	KITAGAWA	9	
87	74418567	Wire Support (U)	6702766			3	
88	74418568	Wire Support (L)	6702767			3	
89	74418569	Wire Cusion	6702768			6	
90	74417737	Nut	P332238005	M5(Chromate)	SANKO Industry	12	
91	74418570	Blind Plate (G3R)	6700848			1	
92	31201060	Pan Head Screw with Washer	P334200166	M4X10(Black Chromate P-3)		6	
93	74418571	Ground Bar (G3D)	6700944			1	
94	74417506	Pan Head Screw with Washer	P334200192	M8X16(Chromate P-3)		2	
95	74417671	Pan Head Screw	P334100132	M8X14(Nickel)		3	

Index	Code	Parts Name	Drawing No.	Type	Maker	Q'ty	Note
96	74417525	Spring Washer	P336050042	8(Nickel)		3	
97	74417526	Washer	P336000103	8(Polished Round)-Nickel		3	
98	74417620	Pan Head Screw	P334100131	M6X12(Nickel)		10	
99	74417507	Spring Washer	P336050041	6(Nickel)		10	
100	74417641	Washer	P336000102	6(Polished Round)-Nickel		10	
101	31201136	Pan Head Screw with Washer	P334208002	M4X10(NickelP-4for Thin Board)	SANKO Industry	10	
102	74562006	Ground Mark	6800994	S500288		1	
103	74416224	LS Bracket	6701859 A			2	
104	74577573	Pan Head Screw	P335030013	Bind-Type-2-5X12(Chromate)		4	
105	52333942	Door Switch	P829602012	D4DS-25FS	OMRON	2	
106	74417738	Pan Head Screw with Washer	P334200120	M4X30(Chromate P-4)		8	
107	74418572	Cable Clamp (G3A)	6700942			1	
108	74419279	Cable Clamp (G3B)	6700943 A			1	
109	74418574	Wire Cusion (G3)	6700969			2	
110	74417737	Nut	P332238005	M5(Chromate)	SANKO Industry	4	
111	74419280	Blind Plate (G3T)	6700828 A			1	
112	31201060	Pan Head Screw with Washer	P334200166	M4X10(Black Chromate P-3)		4	
113	74418576	Shield Clamp Bar (G3)	6701099			1	
114	74577525	Pan Head Screw with Washer	P334200183	M4X10(Chromate P-3)		2	

Index	Code	Parts Name	Drawing No.	Type	Maker	Q'ty	Note
115	74417533	Clamp Screw	P330708003	SKN1.5-6.5	WIELAND	6	
116	31201049	Pan Head Screw with Washer	P334208003	M5X12(NickelP-4for Thin Board)	SANKO Industry	1	
117	74562006	Ground Mark	6800994	S500288		1	
118	31184309	Cable Band	P381058076	TC-142	KITAGAWA	7	
119	74577525	Pan Head Screw with Washer	P334200183	M4X10(Chromate P-3)		7	
120	74417594	Cable Band	P381058122	CS-7	SHINAGAWA	7	
121	74577525	Pan Head Screw with Washer	P334200183	M4X10(Chromate P-3)		7	
122	74416075	Cable Clamp (A1)	6702672			1	
123	74416076	Cable Clamp (A2)	6702673			1	
124	74571846	Wire Cushion (A)	6803044			2	
125	74577525	Pan Head Screw with Washer	P334200183	M4X10(Chromate P-3)		4	
126	74418577	Ground Bar (G3B)	6700928			1	
127	74417506	Pan Head Screw with Washer	P334200192	M8X16(Chromate P-3)		2	
128	74417671	Pan Head Screw	P334100132	M8X14(Nickel)		3	
129	74417525	Spring Washer	P336050042	8(Nickel)		3	
130	74417526	Washer	P336000103	8(Polished Round)-Nickel		3	
131	74418578	Ground Bar (G3C)	6700929			1	
132	74417506	Pan Head Screw with Washer	P334200192	M8X16(Chromate P-3)		2	
133	74417671	Pan Head Screw	P334100132	M8X14(Nickel)		3	

Index	Code	Parts Name	Drawing No.	Type	Maker	Q'ty	Note
134	74417525	Spring Washer	P336050042	8(Nickel)		3	
135	74417526	Washer	P336000103	8(Polished Round)-Nickel		3	
136	31201136	Pan Head Screw with Washer	P334208002	M4X10(NickelP-4for Thin Board)	SANKO Industry	6	
137	74562006	Ground Mark	6800994	S500288		2	
138	74416117	Bush For Cable	P229118014	MG-12	TOCHIGIYA	1	
139	74418614	Bush For Cable	P229112097	C-30-SG-60A-UL	TAKIGEN	3	
140	74416085	DBM Bracket	6702649			1	
141	74417737	Nut	P332238005	M5(Chromate)	SANKO Industry	4	
142	74417639	Pan Head Screw with Washer	P334200169	M5X12(Chromate P-3)		4	
143	74418579	Shield Angle (G3A)	6700857			1	
144	74418580	Shield Angle (G3B)	6700858			1	
145	31177976	Flat Head Screw	P334110001	M3X6		4	
146	74418581	NF Bracket (G3)	6700924 A			1	
147	74417737	Nut	P332238005	M5(Chromate)	SANKO Industry	6	
148	74577573	Pan Head Screw	P335030013	Bind-Type-2-5X12(Chromate)		3	
149	74417530	Noise Filter	P840042014	3SUP-HL100-ER-6-20	OKAYA	1	
150	74577591	Pan Head Screw with Washer	P334200191	M6X16(Chromate P-3)		4	
151	74417547	Terminal Base	P864032062	BAA1000(175)	IDEC	1	
152	74577525	Pan Head Screw with Washer	P334200183	M4X10(Chromate P-3)		2	

Index	Code	Parts Name	Drawing No.	Type	Maker	Q'ty	Note
153	74573455	Block Terminal	P864002051	BN150W	IDEC	4	
154	74417548	Terminal Parts	P864052040	BNE150W	IDEC	2	
155	74417549	Terminal Label	P864072116	BNM7(104)	IDEC	1	
156	74417550	Terminal Cover	P864062159	BNC520(114)	IDEC	1	
157	74417676	Terminal Parts	P864052046	BNL8	IDEC	2	
158	74417639	Pan Head Screw with Washer	P334200169	M5X12(Chromate P-3)		3	
159	31201120	Charging Mark	P360200001	JISB6015-20H		2	
160	74419281	Shield Plate (G3B)	6700923 B			1	
161	74417737	Nut	P332238005	M5(Chromate)	SANKO Industry	3	
162	74577573	Pan Head Screw	P335030013	Bind-Type-2-5X12(Chromate)		2	
163	74417639	Pan Head Screw with Washer	P334200169	M5X12(Chromate P-3)		3	
164	74418583	Shield Plate (G3A)	6700849 A			1	
165	74577525	Pan Head Screw with Washer	P334200183	M4X10(Chromate P-3)		4	
166	74418584	BK Bracket (G3)	6700925 A			1	
167	74417737	Nut	P332238005	M5(Chromate)	SANKO Industry	3	
168	74577573	Pan Head Screw	P335030013	Bind-Type-2-5X12(Chromate)		3	
169	74418585	Handle Plate	6700829 A			1	
170	31201060	Pan Head Screw with Washer	P334200166	M4X10(Black Chromate P-3)		12	
171	74379098	Charging Mark	P360200003	JISB6015-80H		1	

Index	Code	Parts Name	Drawing No.	Type	Maker	Q'ty	Note
172	74419282	Legend Plate (Power OFF)	6705520 D			1	
173	71515875	Low Voltage Breaker	P812004112	EA103CUL/100F=DC24V	FUJI Electric	1	
174	71501159	Accessory(Low Voltage Breaker)	P812094033	BZ6V10C(Handle)	FUJI Electric	1	
175	74417534	Ferrite Core	P840038005	FT-240-77	MICRO Electronics	2	
176	78185958	Charging Mark	P360200002	JISB6015-40H		1	
177	74417523	Indicator Apparatus	P843034047	DR22D0L-M9W	FUJI Electric	1	
178	74561928	Legend Plate (Power Lamp)	6805559			1	
179	75430407	Bush For Cable	P229118017	MG-9	TOCHIGIYA	1	
180	31184309	Cable Band	P381058076	TC-142	KITAGAWA	9	
181	74577596	Pan Head Screw with Washer	P334200186	M4X8(Chromate P-3)		9	
182	74418586	CN Bracket (G3)	6700846			1	
183	74417737	Nut	P332238005	M5(Chromate)	SANKO Industry	2	
184	31184309	Cable Band	P381058076	TC-142	KITAGAWA	11	
185	74577596	Pan Head Screw with Washer	P334200186	M4X8(Chromate P-3)		11	
186	74418587	Fan Plate (G3)	6700826 A			1	
187	74417512	Pan Head Screw with Washer	P334200196	M5X12(Black Chromate P-3)		9	
188	74418588	Fan	P538002032	109S092	SANYO Electric	1	
189	74418589	Accessory For Fan	P538072019	109-099E	SANYO Electric	1	
190	74418593	Pan Head Screw with Washer	P334200211	M3X35(NickelP-3)		3	

Index	Code	Parts Name	Drawing No.	Type	Maker	Q'ty	Note
191	74417514	Nut	P332238003	M3(Chromate)	SANKO Industry	3	
192	74577525	Pan Head Screw with Washer	P334200183	M4X10(Chromate P-3)		2	
193	74418590	Rear Cover (G3T)	6700759			1	
194	74418591	Rear Cover (G3B)	6700825			1	
195	74417512	Pan Head Screw with Washer	P334200196	M5X12(Black Chromate P-3)		29	
196	74379098	Charging Mark	P360200003	JISB6015-80H		3	
197	74416094	Grip	P317152025	AP-197-1-3(Black)	TAKIGEN	1	
198	74418592	Fan	P538002030	109S088	SANYO Electric	3	
199	74568782	Finger Guard	P538072015	109-019E	SANYO Electric	3	Accessory For Fan
200	74418593	Pan Head Screw with Washer	P334200211	M3X35(NickelP-3)		12	
201	74417514	Nut	P332238003	M3(Chromate)	SANKO Industry	12	
202	74417515	Strut Parts	P631408096	BSB-410	HIROSUGI	4	
203	74416012	Filter Cover (L)	6700210			2	
204	74417516	Knob Bolt	P338048012	Faced Screw -NO.2-M4X8(Black)	Tokyo Byora	4	
205	74571522	Filter (L)	6700211			2	
206	74416007	Block Terminal	P864004031	TSU-615-10P	KIMDEN	1	
207	31201097	Terminal Parts	P864052020	BNJ26FW	IDEC	2	
208	74569455	Pan Head Screw with Washer	P334200116	M4X12(Chromate P-4)		2	
209	74417594	Cable Band	P381058122	CS-7	SHINAGAWA	8	

Index	Code	Parts Name	Drawing No.	Type	Maker	Q'ty	Note
210	74416219	Nut	P332238004	M4(Chromate)	SANKO Industry	8	
211	74577525	Pan Head Screw with Washer	P334200183	M4X10(Chromate P-3)		1	
212	74562006	Ground Mark	6800994	S500288		3	
213	74419283	Connector Bracket (G3)	6700847 A			1	
214	74577573	Pan Head Screw	P335030013	Bind-Type-2-5X12(Chromate)		2	
215	74417737	Nut	P332238005	M5(Chromate)	SANKO Industry	2	
216	71377705	Grommet	P229125051	KG-016	KITAGAWA	2	
217	74417619	Block Terminal	P864004039	TSU-615-12P	KIMDEN	1	
218	31201097	Terminal Parts	P864052020	BNJ26FW	IDEC	2	
219	74569455	Pan Head Screw with Washer	P334200116	M4X12(Chromate P-4)		2	
220	74418595	Ground Bar (G3A)	6700927			1	
221	74577525	Pan Head Screw with Washer	P334200183	M4X10(Chromate P-3)		2	
222	31201049	Pan Head Screw with Washer	P334208003	M5X12(NickelP-4for Thin Board)	SANKO Industry	2	
223	31201136	Pan Head Screw with Washer	P334208002	M4X10(NickelP-4for Thin Board)	SANKO Industry	16	
224	36541317	Push Rivet	P339308008	P3555B	SHINAGAWA	12	
225	74418596	Ground Bar	6803458 A			1	
226	74577525	Pan Head Screw with Washer	P334200183	M4X10(Chromate P-3)		2	
227	31201049	Pan Head Screw with Washer	P334208003	M5X12(NickelP-4for Thin Board)	SANKO Industry	4	
228	31201136	Pan Head Screw with Washer	P334208002	M4X10(NickelP-4for Thin Board)	SANKO Industry	6	

Index	Code	Parts Name	Drawing No.	Type	Maker	Q'ty	Note
229	74562006	Ground Mark	6800994	S500288		3	
230	74417625	Transformer	P772008023	STN0.63-S003/D06541B	MURA Electric	1	
231	74577591	Pan Head Screw with Washer	P334200191	M6X16(Chromate P-3)		4	
232	74577591	Pan Head Screw with Washer	P334200191	M6X16(Chromate P-3)		4	
233	74417647	Low Voltage Breaker	P812004117	EA103C/100W with Terminal Block	FUJI Electric	1	
234	74417650	Accessory(Low Voltage Breaker)	P812094037	BZ6TSH10C3	FUJI Electric	1	
235	74417975	Electro-Magnetic Contactor	P810004110	SC-N5-AC200V	FUJI Electric	1	
236	74417649	Accessory For Contactor	P810014029	SZ-N4T	FUJI Electric	2	
237	74417679	Pan Head Screw with Washer	P334200237	M4X40(Chromate P-3)		2	
238	74418597	Strut Parts	P631408105	LS-24N	KAMEDA Electric	3	
239	74418598	Strut Parts	P631408106	LS-24	KAMEDA Electric	3	
240	44027326	Socket Set Screw	P330550030	M6X16(Flat-end)		3	
241	74418599	Terminal A2	6705477 A			1	
242	74418601	Terminal B2	6705478 A			1	
243	74418602	Terminal C2	6705479 A			1	
244	74577579	Pan Head Screw with Washer	P334200190	M6X12(Chromate P-3)		3	
245	74417671	Pan Head Screw	P334100132	M8X14(Nickel)		3	
246	74417525	Spring Washer	P336050042	8(Nickel)		3	
247	74417526	Washer	P336000103	8(Polished Round)-Nickel		3	

Index	Code	Parts Name	Drawing No.	Type	Maker	Q'ty	Note
248	74417620	Pan Head Screw	P334100131	M6X12(Nickel)		6	
249	74417507	Spring Washer	P336050041	6(Nickel)		6	
250	74417641	Washer	P336000102	6(Polished Round)-Nickel		6	
251	31201136	Pan Head Screw with Washer	P334208002	M4X10(NickelP-4for Thin Board)	SANKO Industry	6	
252	74417661	Strut Parts	P631408045	MRZ-4100	KAMEDA Electric	4	
253	74418603	Safety Cover (G3A)	6700945 A			1	
254	74577525	Pan Head Screw with Washer	P334200183	M4X10(Chromate P-3)		4	
255	74418604	Safety Cover (G3B)	6700967			1	
256	36541317	Push Rivet	P339308008	P3555B	SHINAGAWA	4	
257	31201120	Charging Mark	P360200001	JISB6015-20H		1	
258	74418605	Terminal Base	P864038094	DAV4(L=362.5)	TOYO GIKEN	1	
259	74577525	Pan Head Screw with Washer	P334200183	M4X10(Chromate P-3)		2	
260	74417638	Low Voltage Breaker	P812048048	PKZM0-4-T+NHI11-PKZ0	MURA Electric	1	
261	74418606	Low Voltage Breaker	P812128171	60252	SCHNEIDER	1	
262	74418607	Low Voltage Breaker	P812128174	60259	SCHNEIDER	1	
263	74418608	Low Voltage Breaker	P812128175	60257	SCHNEIDER	2	
264	74418609	Low Voltage Breaker	P812128172	60261	SCHNEIDER	1	
265	74418610	Low Voltage Breaker	P812128173	60223	SCHNEIDER	1	
266	74419048	Accessory(Low Voltage Breaker)	P812198004	26925	SCHNEIDER	4	

Index	Code	Parts Name	Drawing No.	Type	Maker	Q'ty	Note
267	74418611	Strut Parts	P631408113	BS-455	HIROSUGI	4	
268	74419284	Safety Cover (G3C)	6700968 B			2	
269	74577525	Pan Head Screw with Washer	P334200183	M4X10(Chromate P-3)		4	
270	74417663	Terminal Base	P864032060	BAA1000(325)	IDEC	1	
271	74577525	Pan Head Screw with Washer	P334200183	M4X10(Chromate P-3)		2	
272	74342638	Terminal Parts	P864052008	BNL6	IDEC	2	
273	36386030	Block Terminal	P864002031	BN30W	IDEC	9	
274	36386046	Terminal Parts	P864052021	BNE30W	IDEC	2	
275	74417665	Terminal Parts	P864052044	BNJ56F	IDEC	2	
276	74417666	Terminal Label	P864072061	BNM7(108)	IDEC	1	
277	74418613	Terminal Cover	P864062100	BNC230(120)	IDEC	1	
278	75428211	Block Terminal	P864002026	BN15MW	IDEC	15	
279	31182112	Terminal Parts	P864052019	BNE15W	IDEC	2	
280	31201097	Terminal Parts	P864052020	BNJ26FW	IDEC	3	
281	74417626	Terminal Label	P864072029	BNM7(120)	IDEC	1	
282	74417627	Terminal Cover	P864062102	BNC230(130)	IDEC	1	
283	31201099	Electro-Magnetic Contactor	P810004092	SJ-0G-DC24V-1A	FUJI Electric	1	
284	74416116	Bush For Cable	P229118016	MG-7	TOCHIGIYA	1	
285	74418614	Bush For Cable	P229112097	C-30-SG-60A-UL	TAKIGEN	2	

Index	Code	Parts Name	Drawing No.	Type	Maker	Q'ty	Note
286	74419285	Harness Support (G3B)	6700973 A			1	
287	74418616	Harness Support (G3F)	6701306			1	
288	74417689	Pan Head Screw with Washer	P334200176	M4X16(Chromate P-4)		8	
289	31184309	Cable Band	P381058076	TC-142	KITAGAWA	1	
290	74577525	Pan Head Screw with Washer	P334200183	M4X10(Chromate P-3)		1	
291	74419286	Duct For Wiring	P869508540	RD-38(L=532) Type-I	SANYO Electric	1	1M (List Only)
292	74419287	Duct For Wiring	P869508542	RD-48(L=305) Type-I	SANYO Electric	1	
293	74418618	Duct For Wiring	P869508534	RD-48(L=330) Type-I	SANYO Electric	2	
294	74419288	Accessory (for Wiring Duct)	P869538018	SS-80(L=530)	SANYO Electric	1	
295	74418620	Accessory (for Wiring Duct)	P869538008	SS-80(L=330)	SANYO Electric	2	
296	74417639	Pan Head Screw with Washer	P334200169	M5X12(Chromate P-3)		9	
297	74577588	Pan Head Screw with Washer	P334200182	M3X8(Chromate P-3)		2	
298	74417684	Pan Head Screw with Washer	P334200187	M5X16(Chromate P-3)		14	
299	74418621	Short Bar	6702780			2	
300	74416134	Amplifier Blind 60W	6705213			1	
301	74417639	Pan Head Screw with Washer	P334200169	M5X12(Chromate P-3)		2	
302	74417658	Ground Bar (1)	6702631 B			1	
303	74417506	Pan Head Screw with Washer	P334200192	M8X16(Chromate P-3)		2	
304	74417671	Pan Head Screw	P334100132	M8X14(Nickel)		4	

Index	Code	Parts Name	Drawing No.	Type	Maker	Q'ty	Note
305	74417525	Spring Washer	P336050042	8(Nickel)		4	
306	74417526	Washer	P336000103	8(Polished Round)-Nickel		4	
307	74417620	Pan Head Screw	P334100131	M6X12(Nickel)		4	
308	74417507	Spring Washer	P336050041	6(Nickel)		4	
309	74417641	Washer	P336000102	6(Polished Round)-Nickel		4	
310	31201136	Pan Head Screw with Washer	P334208002	M4X10(NickelP-4for Thin Board)	SANKO Industry	14	
311	74418622	Ground Bar (5)	6701354			1	
312	74577525	Pan Head Screw with Washer	P334200183	M4X10(Chromate P-3)		2	
313	31201049	Pan Head Screw with Washer	P334208003	M5X12(NickelP-4for Thin Board)	SANKO Industry	3	
314	31201136	Pan Head Screw with Washer	P334208002	M4X10(NickelP-4for Thin Board)	SANKO Industry	12	
315	74562006	Ground Mark	6800994	S500288		2	
316	74417655	Electro-Magnetic Contactor	P810004088	SC-N3/T-AC100V	FUJI Electric	2	
317	71376127	Coil Surge Absorption Unit	P810014043	SZ-Z35	FUJI Electric	2	Accessory For Contactor
318	74417656	Pan Head Screw with Washer	P334200185	M4X16(Chromate P-3)		4	
319	74571855	Ferrite Core	P840038004	FT-1KMF4535G	HITACHI Metals	4	
320	31201096	Block Terminal	P864004037	TSU-615-8P	KIMDEN	1	
321	31201097	Terminal Parts	P864052020	BNJ26FW	IDEC	2	
322	74569455	Pan Head Screw with Washer	P334200116	M4X12(Chromate P-4)		2	
323	74418623	TB Bracket (B)	6702764			2	

Index	Code	Parts Name	Drawing No.	Type	Maker	Q'ty	Note
324	74417639	Pan Head Screw with Washer	P334200169	M5X12(Chromate P-3)		4	
325	74417692	Terminal Base	P864032086	BAA1000(200)	IDEC	1	
326	74577525	Pan Head Screw with Washer	P334200183	M4X10(Chromate P-3)		4	
327	74342638	Terminal Parts	P864052008	BNL6	IDEC	2	
328	36389432	Block Terminal	P864002030	BN75W	IDEC	4	
329	36389433	Terminal Parts	P864052023	BNE75W	IDEC	2	
330	74417659	Terminal Label	P864072051	BNM7(80)	IDEC	1	
331	74417622	Terminal Cover	P864062137	BNC420(90)	IDEC	1	
332	36389432	Block Terminal	P864002030	BN75W	IDEC	4	
333	36389433	Terminal Parts	P864052023	BNE75W	IDEC	2	
334	74417659	Terminal Label	P864072051	BNM7(80)	IDEC	1	
335	74417622	Terminal Cover	P864062137	BNC420(90)	IDEC	1	
336	74418624	TB Bracket (A)	6702763			2	
337	74417639	Pan Head Screw with Washer	P334200169	M5X12(Chromate P-3)		4	
338	74418625	Terminal Base	P864032041	BAA1000(400)	IDEC	1	
339	74577525	Pan Head Screw with Washer	P334200183	M4X10(Chromate P-3)		4	
340	74342638	Terminal Parts	P864052008	BNL6	IDEC	2	
341	36389432	Block Terminal	P864002030	BN75W	IDEC	4	
342	36389433	Terminal Parts	P864052023	BNE75W	IDEC	2	

Index	Code	Parts Name	Drawing No.	Type	Maker	Q'ty	Note
343	74417659	Terminal Label	P864072051	BNM7(80)	IDEC	1	
344	74417622	Terminal Cover	P864062137	BNC420(90)	IDEC	1	
345	75428211	Block Terminal	P864002026	BN15MW	IDEC	7	
346	31182112	Terminal Parts	P864052019	BNE15W	IDEC	2	
347	74417709	Terminal Label	P864072111	BNM7(56)	IDEC	1	
348	74417712	Terminal Cover	P864062152	BNC230(66)	IDEC	1	
349	74417678	Noise Filter	P840042013	3XYEB-105104	OKAYA	3	
350	74577525	Pan Head Screw with Washer	P334200183	M4X10(Chromate P-3)		3	
351	74417654	Bush For Cable	P229112092	C-30-SG-42A-UL	TAKIGEN	1	
352	74416117	Bush For Cable	P229118014	MG-12	TOCHIGIYA	4	
353	74418626	Harness Support (G3D)	6700975			1	
354	74418628	Harness Support (G3E)	6700976			1	
355	74417689	Pan Head Screw with Washer	P334200176	M4X16(Chromate P-4)		8	
356	74418629	Duct For Wiring	P869508331	RD-310(L=780) Type-I	SANYO Electric	1	
357	74418630	Accessory (for Wiring Duct)	P869538011	SS-80(L=780)	SANYO Electric	1	
358	74417639	Pan Head Screw with Washer	P334200169	M5X12(Chromate P-3)		4	
359	74577588	Pan Head Screw with Washer	P334200182	M3X8(Chromate P-3)		2	
360	74417639	Pan Head Screw with Washer	P334200169	M5X12(Chromate P-3)		10	
361	74417640	Pan Head Screw with Washer	P334200135	M5X12(Chromate P-4)		4	

Index	Code	Parts Name	Drawing No.	Type	Maker	Q'ty	Note
362	74577579	Pan Head Screw with Washer	P334200190	M6X12(Chromate P-3)		4	
363	74577573	Pan Head Screw	P335030013	Bind-Type-2-5X12(Chromate)		2	
364	74417599	Toothed Washer	P336030021	A-5(Chromate)		2	
365	74562006	Ground Mark	6800994	S500288		2	
366	74416083	Packing 2(EMF)	6705228			3	
367	74574770	EMI Shield	P869518088	UC-3E0689-0.532M	KITAGAWA	2	
368	74574770	EMI Shield	P869518071	UC-3E0689-0.16M	KITAGAWA	2	
369	74574770	EMI Shield	P869518175	UC-3E0689-0.125M	KITAGAWA	2	
370	74574770	EMI Shield	P869518042	UC-3E0689-0.354M	KITAGAWA	2	
371	74574770	EMI Shield	P869518179	UC-3E0689-0.767M	KITAGAWA	2	
372	74574770	EMI Shield	P869518173	UC-3E0689-0.59M	KITAGAWA	4	
373	74416037	EMI Shield	P869518165	UC-3E0564-0.125M	KITAGAWA	1	
374	74416037	EMI Shield	P869518164	UC-3E0564-0.33M	KITAGAWA	1	
375	36163742	EMI Shield	P869518169	UC-300285-0.136M	KITAGAWA	1	
376	36163742	EMI Shield	P869518170	UC-300285-0.046M	KITAGAWA	2	
377	36163742	EMI Shield	P869518166	UC-300285-0.142M	KITAGAWA	1	
378	36163742	EMI Shield	P869518167	UC-300285-0.222M	KITAGAWA	2	
379	36163742	EMI Shield	P869518168	UC-300285-0.452M	KITAGAWA	1	
380	74574770	EMI Shield	P869518174	UC-3E0689-0.548M	KITAGAWA	2	

Index	Code	Parts Name	Drawing No.	Type	Maker	Q'ty	Note
381	74574770	EMI Shield	P869518053	UC-3E0689-0.032M	KITAGAWA	2	
382	74574770	EMI Shield	P869518176	UC-3E0689-0.011M	KITAGAWA	2	
383	74574770	EMI Shield	P869518178	UC-3E0689-0.024M	KITAGAWA	1	
384	36163742	EMI Shield	P869518172	UC-300285-0.084M	KITAGAWA	2	
385	71368230	Spring Washer	P336050045	4(Chromate)		4	
386	74419289	NF Bracket (G3KA)	6701305 A			1	
387	74417737	Nut	P332238005	M5(Chromate)	SANKO Industry	4	
388	74418648	Terminal (G3A)	6701296			1	
389	74418649	Terminal (G3B)	6701297			1	
390	74418650	Terminal (G3B)	6701298			1	
391	74418651	Terminal (G3B)	6701299			1	
392	74417671	Pan Head Screw	P334100132	M8X14(Nickel)		1	
393	74417525	Spring Washer	P336050042	8(Nickel)		1	
394	74417526	Washer	P336000103	8(Polished Round)-Nickel		1	
395	74419290	Ground Bar (G3E)	6701378			1	
396	74577525	Pan Head Screw with Washer	P334200183	M4X10(Chromate P-3)		2	
397	31201136	Pan Head Screw with Washer	P334208002	M4X10(NickelP-4for Thin Board)	SANKO Industry	10	
398	74419291	DBM Bracket (G3)	6702178			1	
399	74419292	CN Bracket (G3B)	6702179			1	

Index	Code	Parts Name	Drawing No.	Type	Maker	Q'ty	Note
400	74417737	Nut	P332238005	M5(Chromate)	SANKO Industry	2	
401	36541317	Push Rivet	P339308008	P3555B	SHINAGAWA	4	
402	74417551	Power Supply Equipment	P760008023	A06B-6110-H037	FANUC	1	
403	74417552	Servo Amplifier	P767108099	A06B-6114-H109	FANUC	2	
404	71516393	Servo Amplifier	P767108085	A06B-6114-H209	FANUC	1	
405	74417553	Transformer	P772008025	A81L-0001-0159	FANUC	1	
406	74417554	Accessory For Servo Amplifier	P767118030	A06B-6079-H401	FANUC	2	

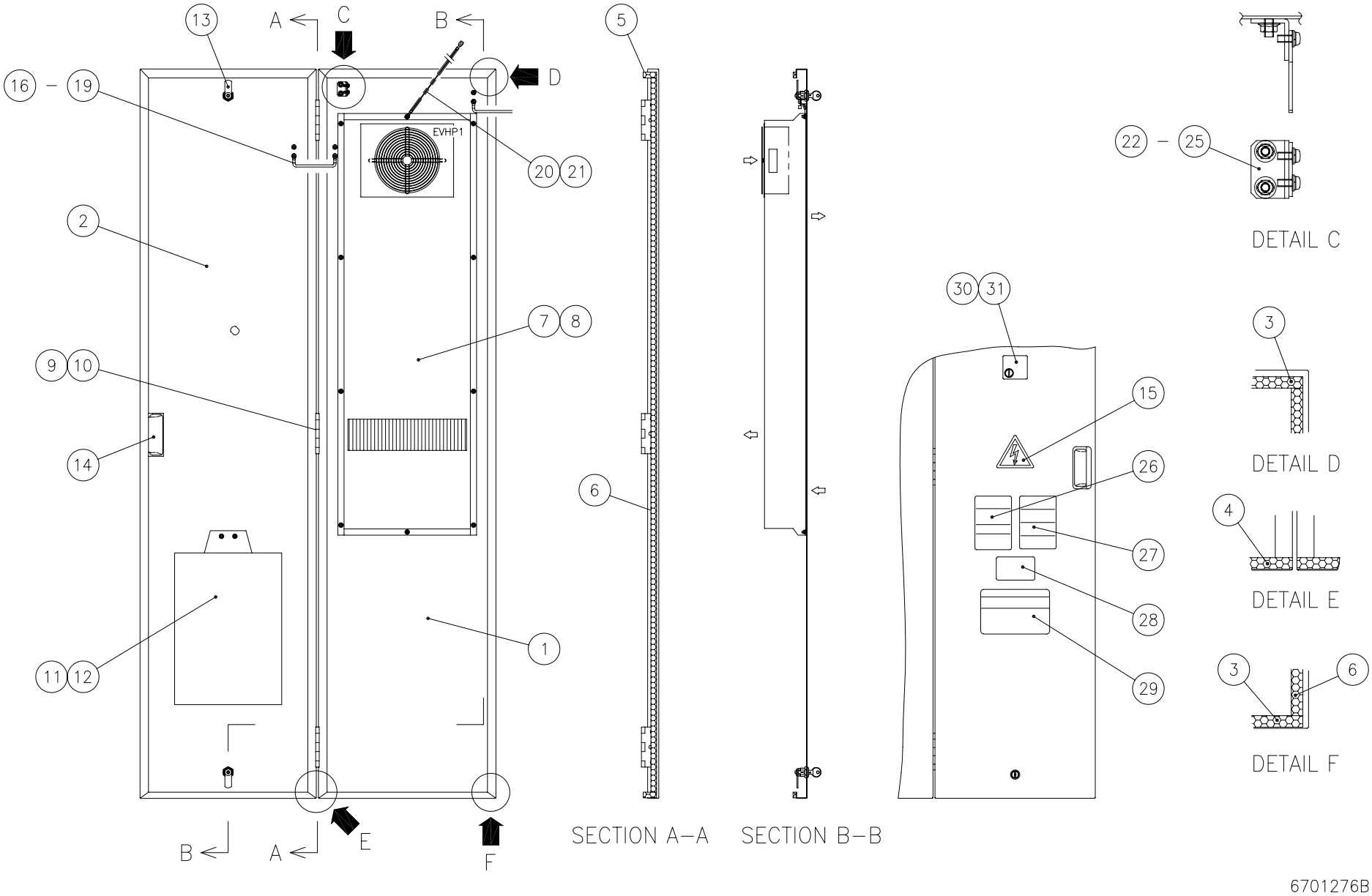
13
A
C
B
5
16 – 19
D
EVHP1
20 21
22 – 25
2
DETAIL C
30 31
3
7 8
9 10
15
14
26
DETAIL D
6
4
27
DETAIL E
28
1
11 12
29
3 6
DETAIL F
B
A
E
F
SECTION A–A
SECTION B–B
6701276B

Index	Code	Parts Name	Drawing No.	Type	Maker	Q'ty	Note
1	74419293	Door (G3L)	6700688 A			1	
2	74419294	Door (G3C)	6700689 B			1	
3	74575391	EMI Shield	P869518162	UC-300279-0.389M	KITAGAWA	2	
4	74575391	EMI Shield	P869518161	UC-300279-0.381M	KITAGAWA	2	
5	74575391	EMI Shield	P869518163	UC-300279-0.03M	KITAGAWA	2	
6	74575391	EMI Shield	P869518160	UC-300279-1.601M	KITAGAWA	3	
7	74417590	Exchanger	7856094	AM5-3096B2T	NIKKASAN	1	
8	74416219	Nut	P332238004	M4(Chromate)	SANKO Industry	9	
9	74417596	Hinge	P313315015	TH-TM-90SUS	TOCHIGIYA	3	
10	71517555	Flat Head Screw	P334110088	M4X8(Nickel)		18	
11	74418657	Clear Holder (G)	6700767			1	
12	74416219	Nut	P332238004	M4(Chromate)	SANKO Industry	2	
13	75429408	Cam Lock	6800707 B			2	
14	74416094	Grip	P317152025	AP-197-1-3(Black)	TAKIGEN	1	
15	74379098	Charging Mark	P360200003	JISB6015-80H		1	
16	74562006	Ground Mark	6800994	S500288		2	
17	74568791	Ground Wire	P342718001	FGM-200-M5	KITAGAWA	1	
18	74417639	Pan Head Screw with Washer	P334200169	M5X12(Chromate P-3)		2	
19	74417599	Toothed Washer	P336030021	A-5(Chromate)		2	

Index	Code	Parts Name	Drawing No.	Type	Maker	Q'ty	Note
20	74418658	Wire Rope	P340068016	TM-173-C3(L=350)	TOCHIGIYA	1	
21	74416219	Nut	P332238004	M4(Chromate)	SANKO Industry	1	
22	74416221	Key Bracket	6701860 A			1	
23	74417737	Nut	P332238005	M5(Chromate)	SANKO Industry	2	
24	71400584	Accessory For Door Switch	P829628002	D4DS-K1	OMRON	1	
25	74577525	Pan Head Screw with Washer	P334200183	M4X10(Chromate P-3)		2	
26	74307487	Legend Plate 3 (Caution)	680012703A			1	
27	74417591	Legend Plate 1 (Caution)	680012701A			1	
28	71373595	Legend Plate 4 (Caution)	680471304			1	
29	74419139	Legend Plate (Electric)	6708369 A			1	
30	74417735	Legend Plate (Door Inter Lock)	6705523			1	
31	74417736	Key Select Switch	P820016010	KG2C-10B	IDEC	1	

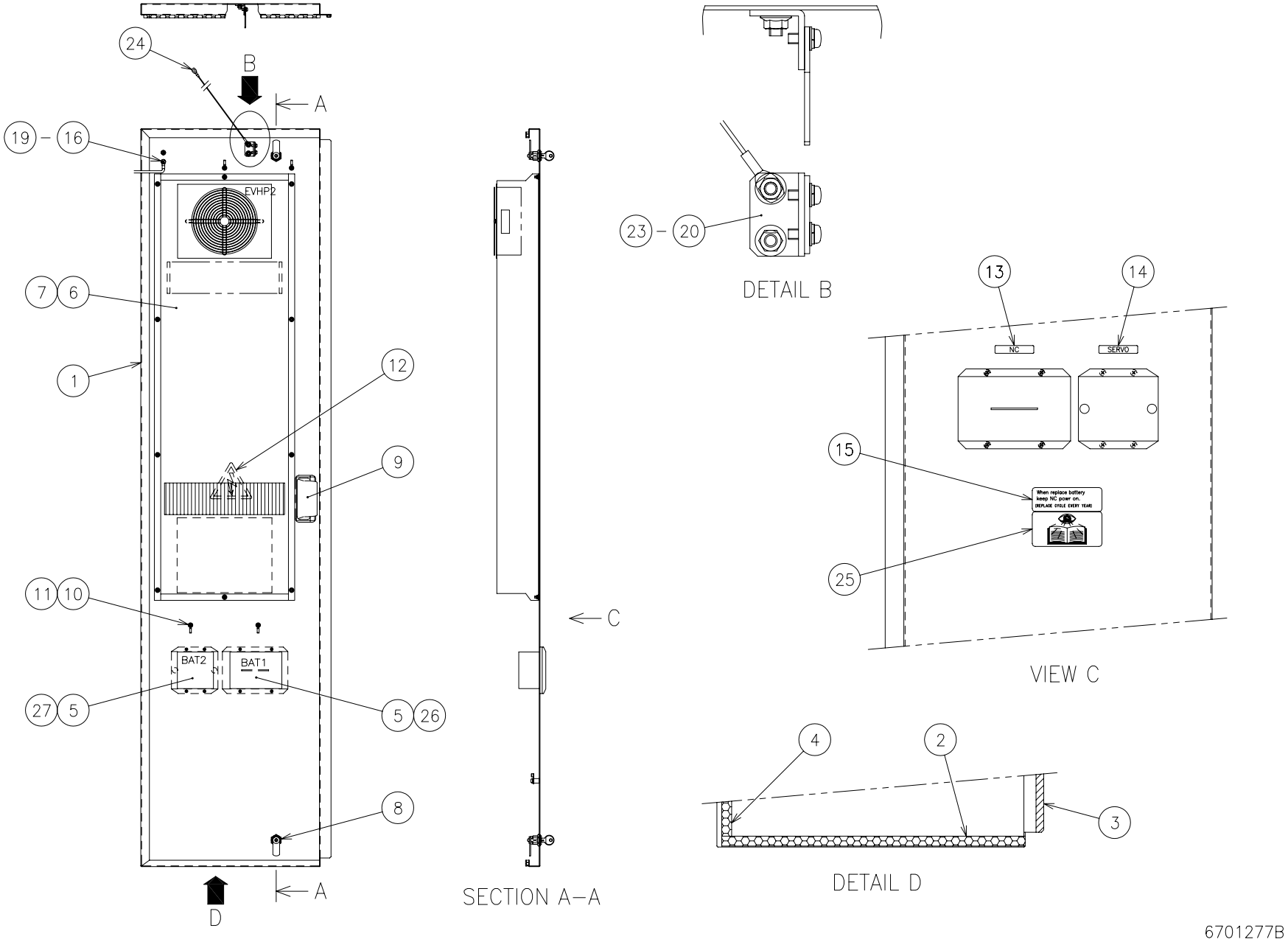
24
B
A
19
16
EVHP2
7
6
1
12
9
11
10
BAT2
BAT1
27
5
5
26
8
A
D
SECTION A–A
C
23
20
DETAIL B
13
14
NC
SERVO
15
When replace battery
keep NC power on.
(REPLACE OFOLE EVERY YEAR)
25
VIEW C
4
2
3
DETAIL D
6701277B

Index	Code	Parts Name	Drawing No.	Type	Maker	Q'ty	Note
1	74419295	Door (G3R)	6700697 A			1	
2	74575391	EMI Shield	P869518162	UC-300279-0.389M	KITAGAWA	2	
3	74418661	Sponge Rubber	P230588154	UK-81440(L=1592)	KONNO	1	
4	74575391	EMI Shield	P869518160	UC-300279-1.601M	KITAGAWA	1	
5	74417595	Dry Battery	P379508001	D Size Alkali Cell		6	
6	74417590	Exchanger	7856094	AM5-3096B2T	NIKKASAN	1	
7	74416219	Nut	P332238004	M4(Chromate)	SANKO Industry	10	
8	75429408	Cam Lock	6800707 B			2	
9	74416094	Grip	P317152025	AP-197-1-3(Black)	TAKIGEN	1	
10	74417594	Cable Band	P381058122	CS-7	SHINAGAWA	4	
11	74416219	Nut	P332238004	M4(Chromate)	SANKO Industry	4	
12	74379098	Charging Mark	P360200003	JISB6015-80H		1	
13	74416099	Label (NC)	6702253			1	
14	74416102	Label (Servo)	6702254			1	
15	74419321	Legend Plate (Battery) ENG	6708621			1	
16	74562006	Ground Mark	6800994	S500288		1	
17	74568791	Ground Wire	P342718001	FGM-200-M5	KITAGAWA	1	
18	74417639	Pan Head Screw with Washer	P334200169	M5X12(Chromate P-3)		1	
19	74417599	Toothed Washer	P336030021	A-5(Chromate)		1	

Index	Code	Parts Name	Drawing No.	Type	Maker	Q'ty	Note
20	74416221	Key Bracket	6701860 A			1	
21	74417737	Nut	P332238005	M5(Chromate)	SANKO Industry	2	
22	71400584	Accessory For Door Switch	P829628002	D4DS-K1	OMRON	1	
23	74577525	Pan Head Screw with Washer	P334200183	M4X10(Chromate P-3)		2	
24	74418658	Wire Rope	P340068016	TM-173-C3(L=350)	TOCHIGIYA	1	
25	74419322	Legend Plate (Mannual)	6708622			1	
26	74417605	Accessory (Program Controller)	P767485092	A02B-0236-C281	FANUC	1	
27	71513859	Battery Case	P767118002	A06B-6050-K060	FANUC	1	Accessory For Servo Amplifier

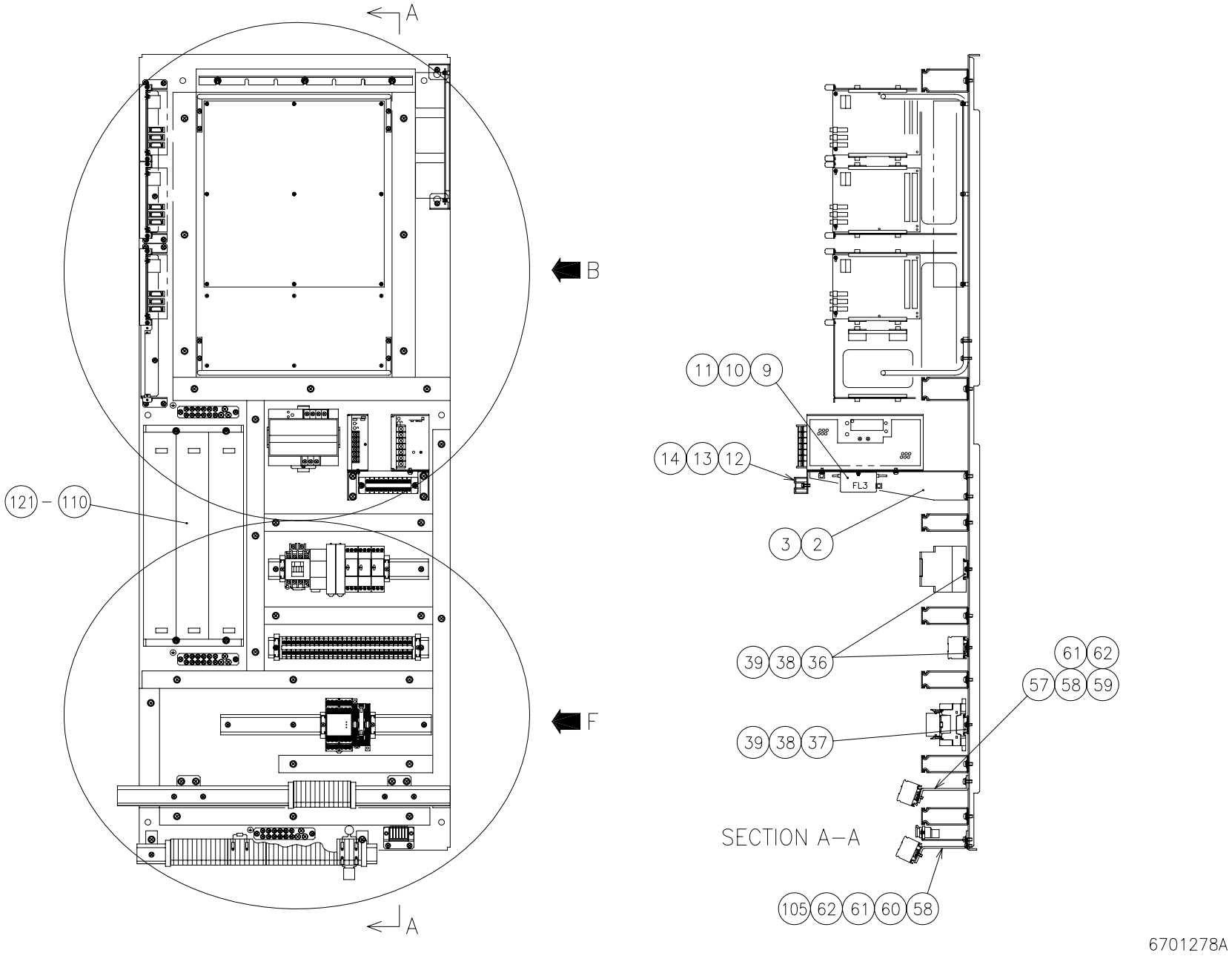
A
B
F
A
121 – 110
11 10 9
14 13 12
FL3
3 2
39 38 36
39 38 37
61 62
57 58 59
SECTION A–A
105 62 61 60 58
6701278A

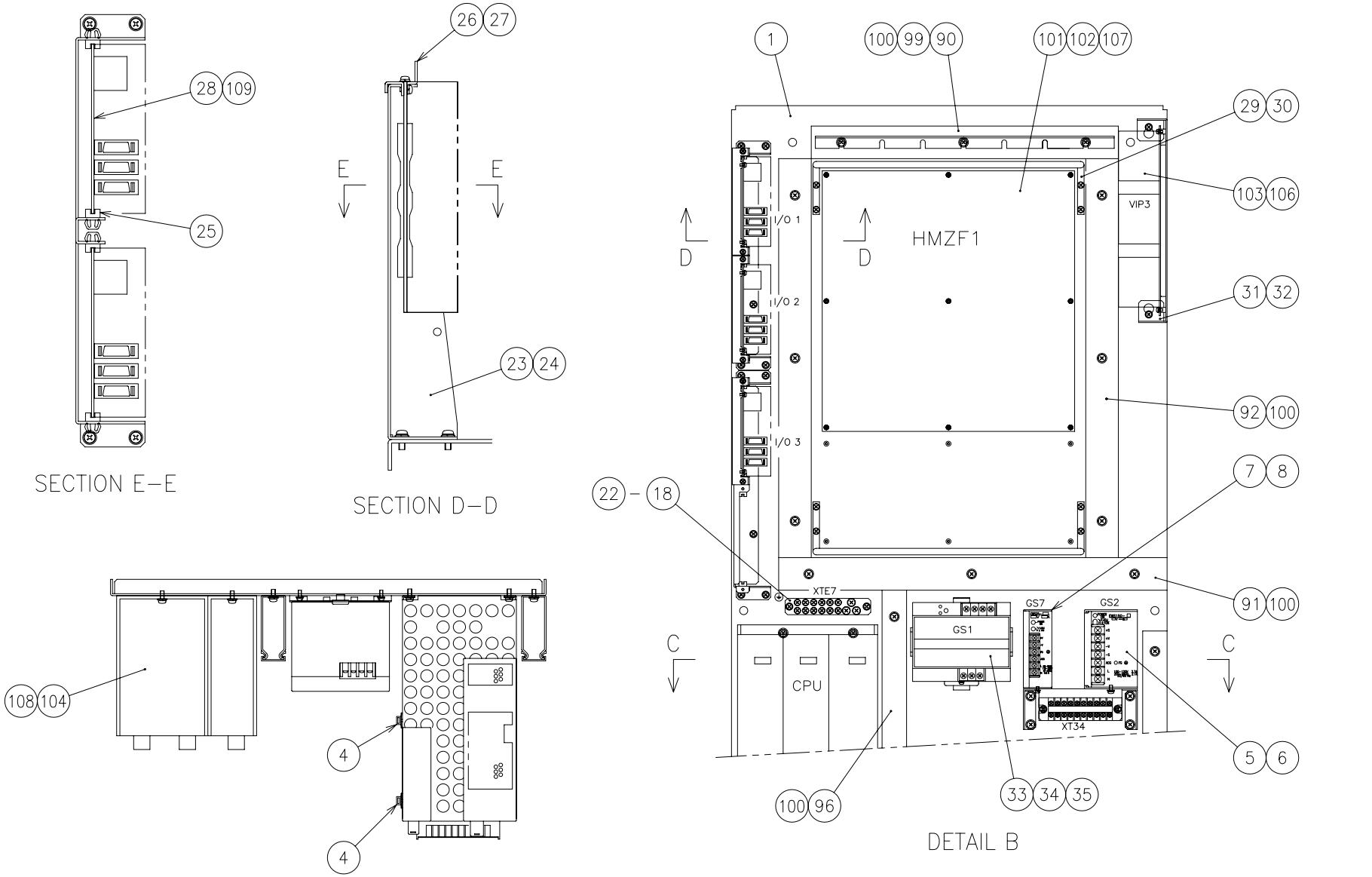
28
109
25
SECTION E–E
26
27
E
E
23
24
SECTION D–D
108
104
4
4
SECTION C–C
1
100
99
90
101
102
107
29
30
103
106
VIP3
D
D
HMZF1
I/O 1
I/O 2
I/O 3
31
32
92
100
7
8
22
18
XTE7
GS7
GS2
GS1
91
100
C
C
CPU
XT34
5
6
100
96
33
34
35
DETAIL B

6701278A

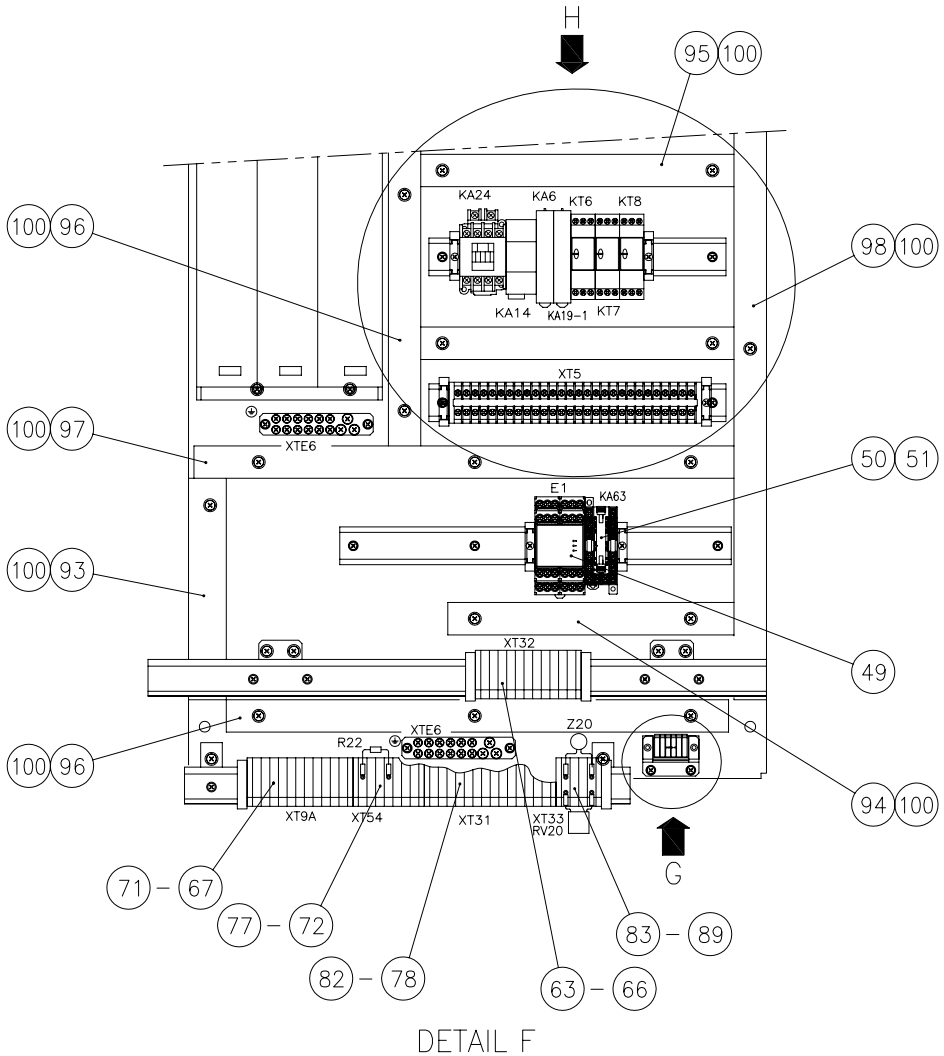

DETAIL F

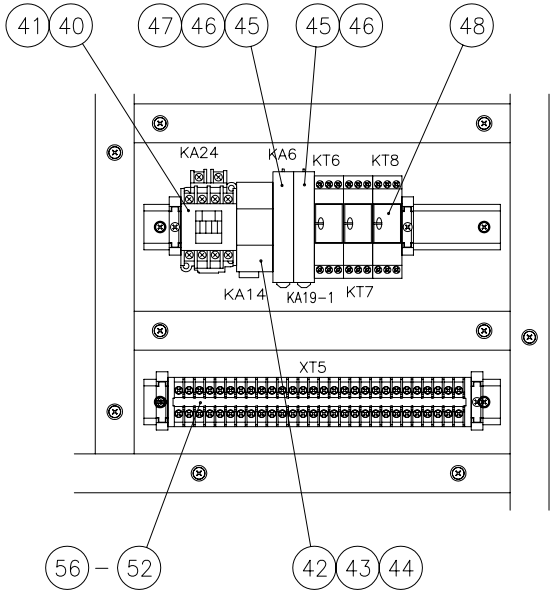

DETAIL H

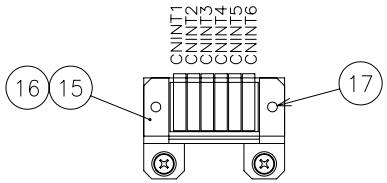

DETAIL G

6701278A

Index	Code	Parts Name	Drawing No.	Type	Maker	Q'ty	Note
1	74419296	Chassis (G3R)	6700839 B			1	
2	74417982	GS Bracket	6705700 A			1	
3	74417639	Pan Head Screw with Washer	P334200169	M5X12(Chromate P-3)		4	
4	74417710	Cable Band	P381058126	PWMS-H25	KITAGAWA	2	
5	31135006	Switching Power Supply	P772124006	EWS150-24	DENSEI-LAMBDA	1	
6	74577596	Pan Head Screw with Washer	P334200186	M4X8(Chromate P-3)		3	
7	74417685	Switching Power Supply	P772124030	EWS25-24	DENSEI-LAMBDA	1	
8	74577588	Pan Head Screw with Washer	P334200182	M3X8(Chromate P-3)		2	
9	74417686	Noise Filter	P840048016	MBS-1210-22	DENSEI-LAMBDA	1	
10	31201105	Accessory(C-T)	P772158001	SB-4064-23	FUJI Electric	4	
11	74417514	Nut	P332238003	M3(Chromate)	SANKO Industry	2	
12	74416007	Block Terminal	P864004031	TSU-615-10P	KIMDEN	1	
13	31201097	Terminal Parts	P864052020	BNJ26FW	IDEC	2	
14	74569455	Pan Head Screw with Washer	P334200116	M4X12(Chromate P-4)		2	
15	74419297	CN Bracket (G3A)	6701098 A			1	
16	74577525	Pan Head Screw with Washer	P334200183	M4X10(Chromate P-3)		2	
17	36541317	Push Rivet	P339308008	P3555B	SHINAGAWA	2	
18	74418622	Ground Bar (5)	6701354			3	
19	74577525	Pan Head Screw with Washer	P334200183	M4X10(Chromate P-3)		6	

Index	Code	Parts Name	Drawing No.	Type	Maker	Q'ty	Note
20	31201049	Pan Head Screw with Washer	P334208003	M5X12(NickelP-4for Thin Board)	SANKO Industry	9	
21	31201136	Pan Head Screw with Washer	P334208002	M4X10(NickelP-4for Thin Board)	SANKO Industry	36	
22	74562006	Ground Mark	6800994	S500288		3	
23	74416177	I/O Bracket	6702651			2	
24	74577525	Pan Head Screw with Washer	P334200183	M4X10(Chromate P-3)		12	
25	74417687	Stay For Board	P870078003	G-1070	NICS	8	
26	74416178	Stay (for I/O)	6702652 B			3	
27	74577588	Pan Head Screw with Washer	P334200182	M3X8(Chromate P-3)		6	
28	74417688	Pan Head Screw with Washer	P334200173	M3X6(NickelP-4)		3	
29	74418665	Harness Support (G3A)	6700970			2	
30	74417689	Pan Head Screw with Washer	P334200176	M4X16(Chromate P-4)		8	
31	74417711	VIP3A Bracket	6705413 A			1	
32	74577525	Pan Head Screw with Washer	P334200183	M4X10(Chromate P-3)		2	
33	71516162	Terminal Base	P864032075	BAA1000(125)	IDEC	1	
34	74577525	Pan Head Screw with Washer	P334200183	M4X10(Chromate P-3)		2	
35	74417720	Switching Power Supply	P772124025	DLP240-24-1	DENSEI-LAMBDA	1	
36	74417729	Terminal Base	P864032069	BAA1000(275)	IDEC	2	
37	74573490	Terminal Base	P864032167	BAA1000(362.5)	IDEC	1	
38	74577525	Pan Head Screw with Washer	P334200183	M4X10(Chromate P-3)		7	

Index	Code	Parts Name	Drawing No.	Type	Maker	Q'ty	Note
39	74342638	Terminal Parts	P864052008	BNL6	IDEC	6	
40	74417697	Electro-Magnetic Contactor	P810004050	SC-03/GT-DC24V-1A	FUJI Electric	1	
41	71369205	Surge Killer	P810184007	SZ-Z4	FUJI Electric	1	
42	74561288	Control Relay	P800004057	HH62P-FL(DC24V)	FUJI Electric	1	
43	10385445	Relay Socket	P800084007	TP68X2	FUJI Electric	1	Accessory For Control Relay
44	74564526	Finger Protector	P800084017	RZ62X2	FUJI Electric	1	Accessory For Control Relay
45	74561284	Control Relay	P800002017	G2R-2-SND-DC24V	OMRON	2	
46	71516149	Relay Socket	P800082017	P2RF-08-E	OMRON	2	Accessory For Control Relay
47	74417696	Diode	P843608027	D1N20-4060	SHINDENGEN	1	
48	74417719	Timer	P805008006	RE8RA11B	SCHNEIDER	3	
49	74418666	Safety Relay Unit	P809028009	SM44A	HENGSTLER	1	
50	31185735	Control Relay	P800002094	G7SA-4A2B	OMRON	1	
51	74572138	Relay Socket	P800082018	P7SA-14F-ND	OMRON	1	Accessory For Control Relay
52	75428211	Block Terminal	P864002026	BN15MW	IDEC	28	
53	31182112	Terminal Parts	P864052019	BNE15W	IDEC	2	
54	31201097	Terminal Parts	P864052020	BNJ26FW	IDEC	4	
55	74418667	Terminal Label	P864072134	BNM7(226)	IDEC	1	
56	74418668	Terminal Cover	P864062187	BNC230(234)	IDEC	1	
57	74416181	TB Bracket	6702017			2	

Index	Code	Parts Name	Drawing No.	Type	Maker	Q'ty	Note
58	74417639	Pan Head Screw with Washer	P334200169	M5X12(Chromate P-3)		6	
59	74419298	Terminal Base	P864032172	BAA1000(572.5)	IDEC	1	
60	74419299	Terminal Base	P864032171	BAA1000(412.5)	IDEC	1	
61	74577525	Pan Head Screw with Washer	P334200183	M4X10(Chromate P-3)		6	
62	74342638	Terminal Parts	P864052008	BNL6	IDEC	4	
63	75428211	Block Terminal	P864002026	BN15MW	IDEC	11	
64	31182112	Terminal Parts	P864052019	BNE15W	IDEC	2	
65	74417713	Terminal Label	P864072110	BNM7(88)	IDEC	1	
66	10428963	Terminal Cover	P864062094	BNC230(100)	IDEC	1	
67	75428211	Block Terminal	P864002026	BN15MW	IDEC	11	
68	31182112	Terminal Parts	P864052019	BNE15W	IDEC	2	
69	31201097	Terminal Parts	P864052020	BNJ26FW	IDEC	2	
70	74417713	Terminal Label	P864072110	BNM7(88)	IDEC	1	
71	10428963	Terminal Cover	P864062094	BNC230(100)	IDEC	1	
72	75428211	Block Terminal	P864002026	BN15MW	IDEC	7	
73	31182112	Terminal Parts	P864052019	BNE15W	IDEC	2	
74	31201097	Terminal Parts	P864052020	BNJ26FW	IDEC	1	
75	74417709	Terminal Label	P864072111	BNM7(56)	IDEC	1	
76	74418671	Terminal Cover	P864062119	BNC230(68)	IDEC	1	

Index	Code	Parts Name	Drawing No.	Type	Maker	Q'ty	Note
77	74418672	Resistor	6705169 B			1	
78	75428211	Block Terminal	P864002026	BN15MW	IDEC	14	
79	31182112	Terminal Parts	P864052019	BNE15W	IDEC	2	
80	31201097	Terminal Parts	P864052020	BNJ26FW	IDEC	1	
81	74418673	Terminal Label	P864072123	BNM7(112)	IDEC	1	
82	74418674	Terminal Cover	P864062173	BNC230(122)	IDEC	1	
83	75428211	Block Terminal	P864002026	BN15MW	IDEC	4	
84	31182112	Terminal Parts	P864052019	BNE15W	IDEC	2	
85	31201097	Terminal Parts	P864052020	BNJ26FW	IDEC	1	
86	74417717	Terminal Label	P864072080	BNM7(32)	IDEC	1	
87	74417718	Terminal Cover	P864062114	BNC230(42)	IDEC	1	
88	74571885	Surge Absorber	6702271			1	
89	74571886	Spark Killer	6702270			1	
90	74418675	Duct For Wiring	P869508535	RD-48(L=377) Type-I	SANYO Electric	1	
91	74418676	Duct For Wiring	P869508536	RD-48(L=477) Type-I	SANYO Electric	1	
92	74417708	Duct For Wiring	P869508359	RD-48(L=490) Type-I	SANYO Electric	2	
93	74418677	Duct For Wiring	P869508333	RD-38(L=205) Type-I	SANYO Electric	1	
94	74418678	Duct For Wiring	P869508384	RD-38(L=265) Type-I	SANYO Electric	1	
95	74417699	Duct For Wiring	P869508334	RD-38(L=290) Type-I	SANYO Electric	2	

Index	Code	Parts Name	Drawing No.	Type	Maker	Q'ty	Note
96	74417703	Duct For Wiring	P869508310	RD-38(L=465) Type-I	SANYO Electric	2	
97	74417704	Duct For Wiring	P869508335	RD-38(L=500) Type-I	SANYO Electric	1	
98	74418679	Duct For Wiring	P869508336	RD-38(L=650) Type-I	SANYO Electric	1	
99	74418680	Accessory (for Wiring Duct)	P869538010	SS-80(L=377)	SANYO Electric	1	
100	74417639	Pan Head Screw with Washer	P334200169	M5X12(Chromate P-3)		32	
101	74575020	Pan Head Screw with Washer	P334200144	M3X6(Chromate P-4)		8	
102	74417688	Pan Head Screw with Washer	P334200173	M3X6(NickelP-4)		1	
103	74577589	Pan Head Screw with Washer	P334200181	M3X6(Chromate P-3)		4	
104	74417639	Pan Head Screw with Washer	P334200169	M5X12(Chromate P-3)		4	
105	74419045	Terminal Parts	P864058074	S-3	KAMEDA Electric	2	
106	74419301	VIP3 (B) Board	6708610			1	
107	74417722	HMZF1 Board	6702383 B	B6200D-HMZF1-01B		1	
108	74417723	Program Controller Module	P767478022	A02B-0283-B803	FANUC	1	
109	71369424	Accessory (Program Controller)	P767485288	A20B-2002-0521	FANUC	3	
110	74417724	Program Controller Module	P767478007	A02B-0265-H170	FANUC	1	
111	74417725	Program Controller Module	P767478023	A02B-0283-H200	FANUC	1	
112	71516364	Power Supply Equipment	P760008019	A02B-0281-H115	FANUC	1	
113	74417726	Program Controller Module	P767478024	A02B-0283-H001	FANUC	1	
114	74572094	Program Controller Module	P767478020	A02B-0281-H083	FANUC	1	

Index	Code	Parts Name	Drawing No.	Type	Maker	Q'ty	Note
115	71516366	Program Controller Module	P767478010	A02B-0281-H034	FANUC	1	
116	74417727	Program Controller Module	P767478025	A02B-0281-H043	FANUC	1	
117	71516386	Program Controller Module	P767478015	A02B-0281-J207	FANUC	1	
118	71515724	Program Controller Module	P767478013	A02B-0281-J093	FANUC	1	
119	71516368	Accessory (Program Controller)	P767485354	A02B-0265-J191	FANUC	1	
120	71516369	Accessory (Program Controller)	P767485355	A02B-0265-J192	FANUC	1	
121	74417728	Accessory (Program Controller)	P767485356	A02B-0265-J193	FANUC	3	

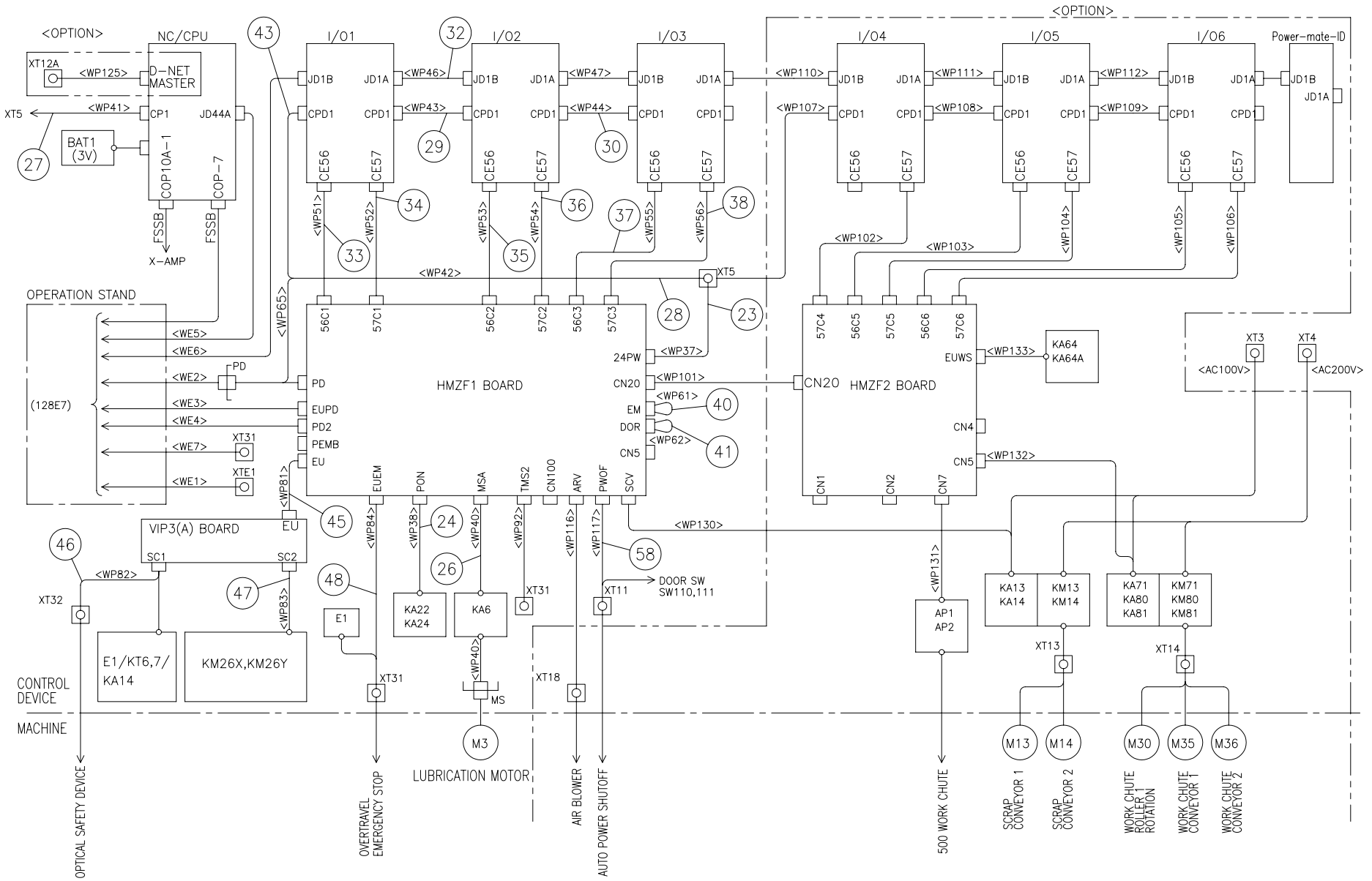
<OPTION>
NC/CPU
XT12A
<WP125>
D-NET MASTER
XT5
<WP41>
CP1
JD44A
BAT1 (3V)
COP10A-1
COP-7
FSSB
X-AMP
I/01
I/02
I/03
I/04
I/05
I/06
Power-mate-ID
JD1B
JD1A
CPD1
CE56
CE57
<WP46>
<WP47>
<WP43>
<WP44>
<WP110>
<WP111>
<WP112>
<WP107>
<WP108>
<WP109>
<WP51>
<WP52>
<WP53>
<WP54>
<WP55>
<WP56>
<WP102>
<WP103>
<WP104>
<WP105>
<WP106>
<WP42>
<WP65>
OPERATION STAND
(128E7)
<WE5>
<WE6>
<WE2>
<WE3>
<WE4>
<WE7>
<WE1>
PD
XT31
XTE1
56C1
57C1
56C2
57C2
56C3
57C3
HMZF1 BOARD
PD
EUPD
PD2
PEMB
EU
24PW
CN20
EM
DOR
CN5
<WP37>
<WP101>
<WP61>
<WP62>
EUEM
PON
MSA
TMS2
CN100
ARV
PWOF
SCV
<WP81>
<WP84>
<WP38>
<WP40>
<WP92>
<WP116>
<WP117>
<WP130>
57C4
56C5
57C5
56C6
57C6
HMZF2 BOARD
EUWS
CN4
CN1
CN2
CN7
<WP133>
<WP132>
KA64
KA64A
XT3
XT4
<AC100V>
<AC200V>
VIP3(A) BOARD
SC1
SC2
<WP82>
<WP83>
XT32
E1/KT6,7/KA14
KM26X,KM26Y
E1
KA22
KA24
KA6
XT31
XT11
DOOR SW
SW110,111
XT18
MS
<WP131>
AP1
AP2
KA13
KA14
KM13
KM14
KA71
KA80
KA81
KM71
KM80
KM81
XT13
XT14
CONTROL DEVICE
MACHINE
M3
M13
M14
M30
M35
M36
OPTICAL SAFETY DEVICE
OVERTRAVEL EMERGENCY STOP
LUBRICATION MOTOR
AIR BLOWER
AUTO POWER SHUTOFF
500 WORK CHUTE
SCRAP CONVEYOR 1
SCRAP CONVEYOR 2
WORK CHUTE ROLLER 1 ROTATION
WORK CHUTE CONVEYOR 1
WORK CHUTE CONVEYOR 2
670779126

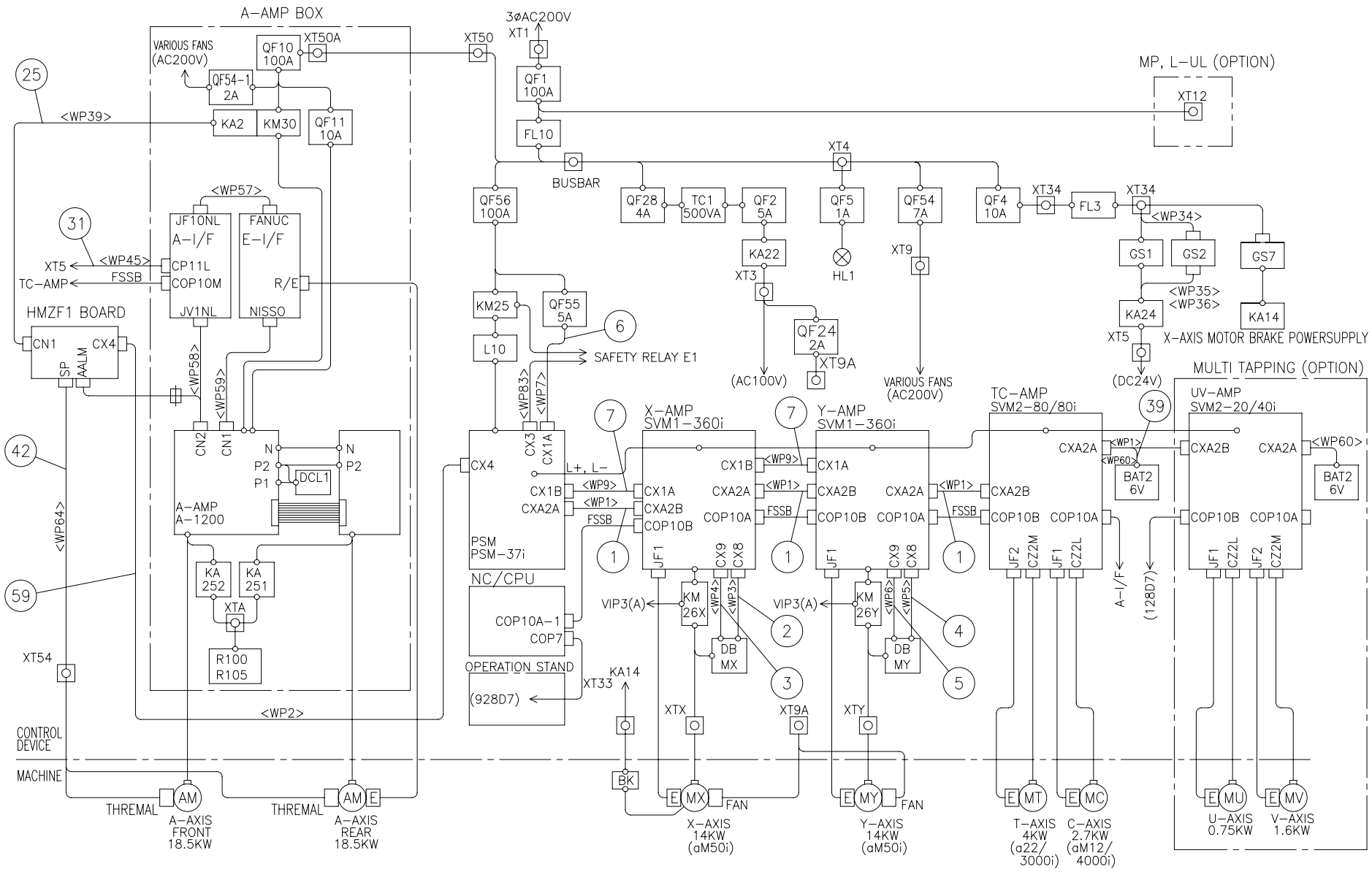
A-AMP BOX
VARIOUS FANS (AC200V)
QF10 100A
XT50A
XT50
QF54-1 2A
KA2
KM30
QF11 10A
<WP39>
3ØAC200V
XT1
QF1 100A
FL10
BUSBAR
MP, L-UL (OPTION)
XT12
XT4
QF56 100A
QF28 4A
TC1 500VA
QF2 5A
QF5 1A
QF54 7A
QF4 10A
XT34
FL3
<WP34>
GS1
GS2
GS7
KA22
XT3
HL1
XT9
<WP35>
<WP36>
KA24
KA14
XT5
X-AXIS MOTOR BRAKE POWERSUPPLY
(DC24V)
<WP57>
JF10NL
A-I/F
FANUC
E-I/F
XT5
<WP45>
CP11L
FSSB
TC-AMP
COP10M
R/E
JV1NL
NISSO
HMZF1 BOARD
CN1
CX4
SP
AALM
KM25
QF55 5A
L10
QF24 2A
XT9A
(AC100V)
VARIOUS FANS (AC200V)
SAFETY RELAY E1
<WP58>
<WP59>
<WP83>
<WP7>
CN2
CN1
N
P2
P1
DCL1
A-AMP A-1200
CX4
CX3
CX1A
L+, L-
PSM PSM-37i
X-AMP SVM1-360i
Y-AMP SVM1-360i
TC-AMP SVM2-80/80i
UV-AMP SVM2-20/40i
MULTI TAPPING (OPTION)
CX1B
CXA2A
<WP9>
<WP1>
CX1A
CXA2B
COP10B
COP10A
JF1
CX9
CX8
JF2
CZ2M
CZ2L
BAT2 6V
A-I/F
(128D7)
<WP60>
KA 252
KA 251
XTA
R100 R105
<WP64>
XT54
NC/CPU
COP10A-1
COP7
OPERATION STAND
(928D7)
XT33
KA14
VIP3(A)
KM 26X
KM 26Y
<WP4>
<WP3>
<WP6>
<WP5>
DB MX
DB MY
XTX
XT9A
XTY
<WP2>
CONTROL DEVICE
MACHINE
BK
THREMAL
AM
A-AXIS FRONT 18.5KW
A-AXIS REAR 18.5KW
E
MX
FAN
X-AXIS 14KW (aM50i)
MY
Y-AXIS 14KW (aM50i)
MT
T-AXIS 4KW (a22/ 3000i)
MC
C-AXIS 2.7KW (aM12/ 4000i)
MU
U-AXIS 0.75KW
MV
V-AXIS 1.6KW
670779127

Index	Code	Parts Name	Drawing No.	Type	Maker	Q'ty	Note
1	74418935	WP1	670285201			2	
2	74418681	WP3	670285203			1	
3	74418682	WP4	670285204			1	
4	74418683	WP5	670285205			1	
5	74418684	WP6	670285206			1	
6	74419302	WP7	670285207B			1	
7	74418686	WP9	670285209			2	
8	74418687	WP11	670285211			1	List Only
9	74418688	WP12	670285212			1	List Only
10	74418689	WP13	670285213			1	List Only
11	74418690	WP14	670285214			1	List Only
12	74418693	WP17	670285217			1	List Only
13	74418694	WP18	670285218			1	List Only
14	74418695	WP19	670285219			1	List Only
15	74419303	WP20	670285220A			1	List Only
16	74418697	WP21	670285221			1	List Only
17	74418698	WP22	670285222			1	List Only
18	74418699	WP23	670285223			1	List Only
19	74418701	WP24	670285224			1	List Only

Index	Code	Parts Name	Drawing No.	Type	Maker	Q'ty	Note
20	74418702	WP25	670285225			1	List Only
21	74419304	WP29	670285229A			1	List Only
22	74419305	WP30	670285230A			1	List Only
23	74418705	WP37	670285237			1	
24	74418706	WP38	670285238			1	
25	74419306	WP39	670285239A			1	
26	74418708	WP40	670285240			1	
27	74418709	WP41	670285241			1	
28	74418710	WP42	670285242			1	
29	74418711	WP43	670285243			1	
30	74418712	WP44	670285244			1	
31	74418713	WP45	670285245			1	
32	74418714	WP46	670285246			1	
33	74418715	WP51	670285251			1	
34	74418716	WP52	670285252			1	
35	74418717	WP53	670285253			1	
36	74418718	WP54	670285254			1	
37	74418719	WP55	670285255			1	
38	74418720	WP56	670285256			1	

Index	Code	Parts Name	Drawing No.	Type	Maker	Q'ty	Note
39	74418721	WP60	670285260			1	
40	74418722	WP61	670285261			1	
41	74418723	WP62	670285262			1	
42	74418724	WP64	670285264			1	
43	74418725	WP65	670285265			1	
44	74418726	WP66	670285266			1	List Only
45	74418727	WP81	670285281			1	
46	74418728	WP82	670285282			1	
47	74418729	WP83	670285283			1	
48	74418730	WP84	670285284			1	
49	74418731	WP85	670285285			1	List Only
50	74418732	WP86	670285286			1	List Only
51	74418733	WP87	670285287			1	List Only
52	74419307	WP88	670285288A			1	List Only
53	74418735	WP89	670285289			1	List Only
54	74418736	WP90	670285290			1	List Only
55	74418737	WP91	670285291			1	List Only
56	74418738	WP93	670285293			1	List Only
57	74418739	WP94	670285294			1	List Only

Index	Code	Parts Name	Drawing No.	Type	Maker	Q'ty	Note
58	74418740	WP117	670285317			1	
59	74419308	WP2	670285202			1	
60	74419309	WP99	670285299			1	List Only

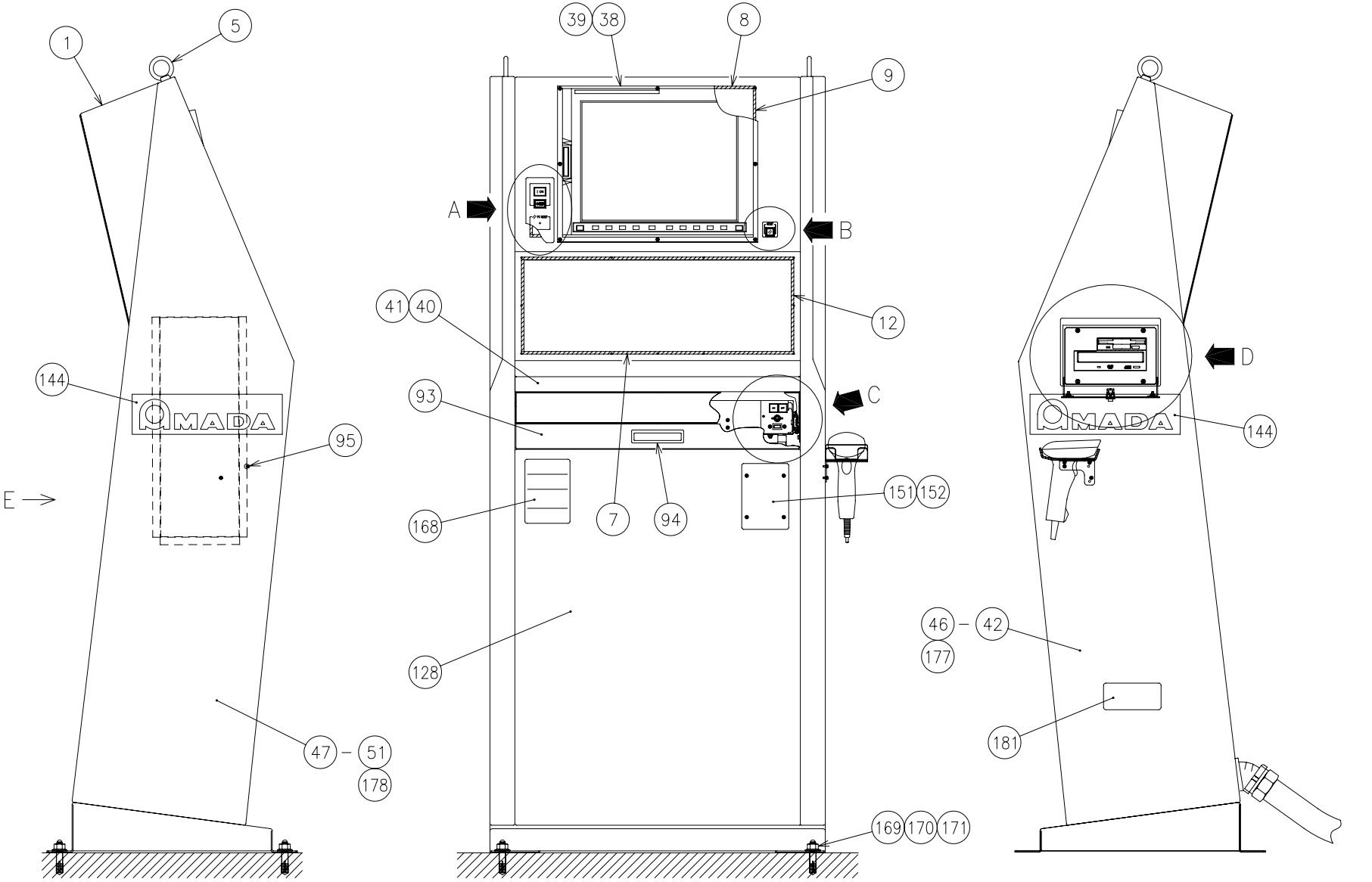
1
5
39
38
8
9
A
B
41
40
12
144
93
C
D
95
E
151
152
168
7
94
46
42
177
128
181
47
51
178
169
170
171
6705138#1A
6705138#2A
6705138#3A

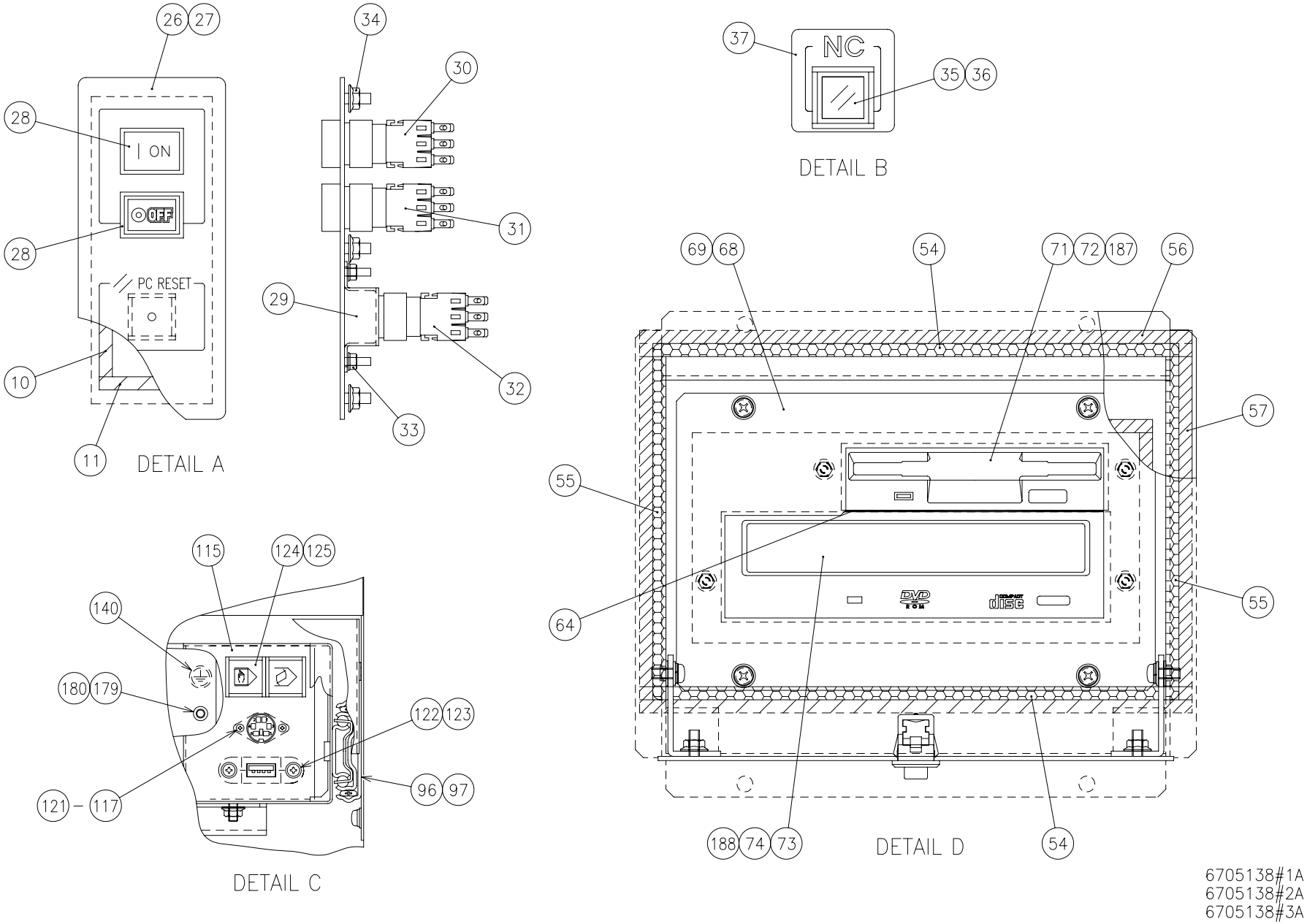
26
27
28
ON
OFF
28
PC RESET
10
11
DETAIL A
34
30
31
29
32
33
37
NC
35
36
DETAIL B
69
68
54
71
72
187
56
57
55
64
55
188
74
73
DETAIL D
54
115
124
125
140
180
179
122
123
121
117
96
97
DETAIL C
6705138#1A
6705138#2A
6705138#3A

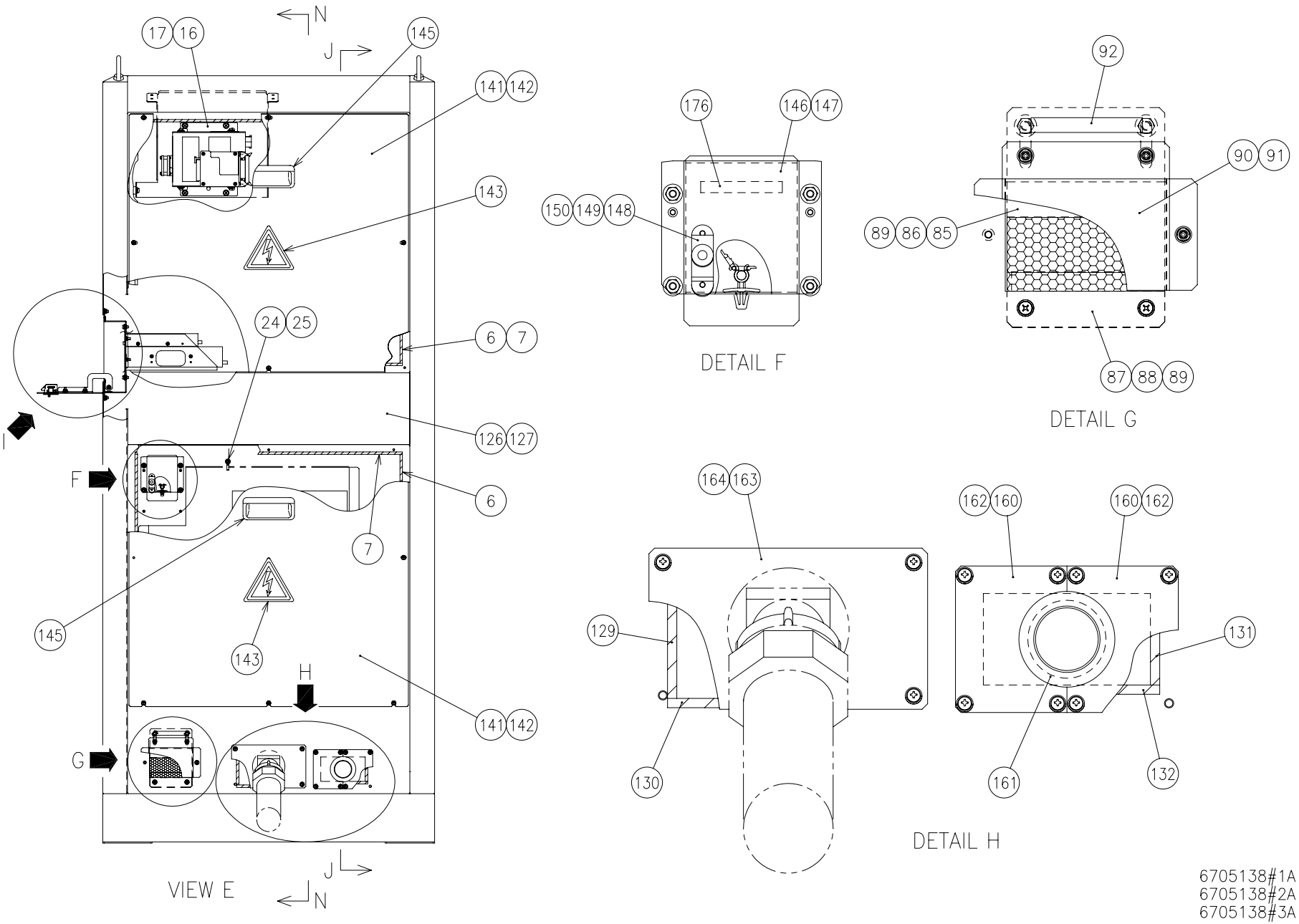
N
J
17
16
145
141
142
143
24
25
6
7
126
127
I
F
6
7
145
143
H
141
142
G
J
N
VIEW E
176
146
147
150
149
148
DETAIL F
92
90
91
89
86
85
87
88
89
DETAIL G
164
163
129
130
162
160
160
162
131
161
132
DETAIL H
6705138#1A
6705138#2A
6705138#3A

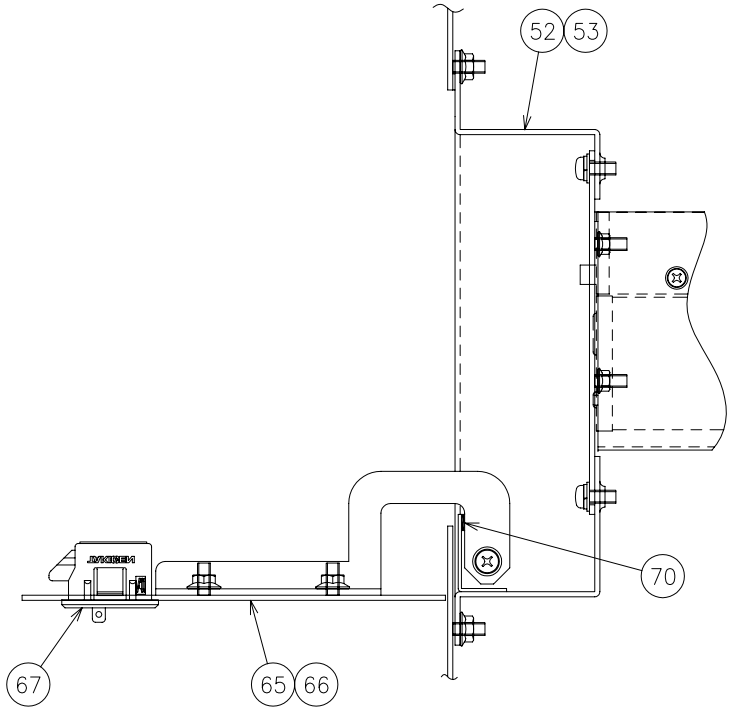

DETAIL I

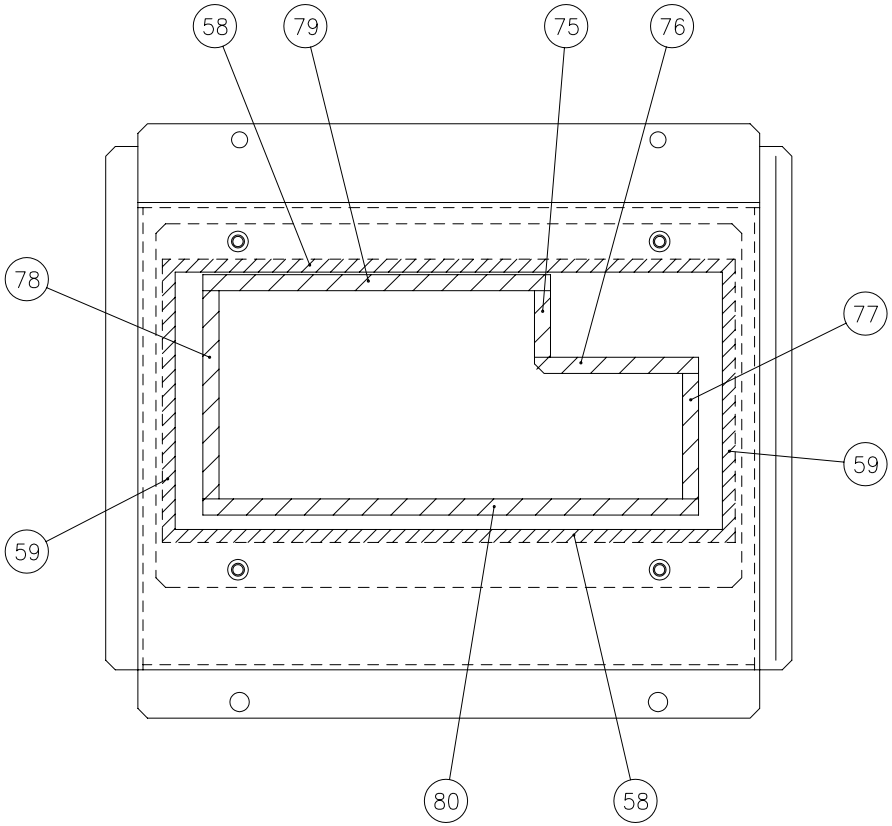

6705138#1A
6705138#2A
6705138#3A

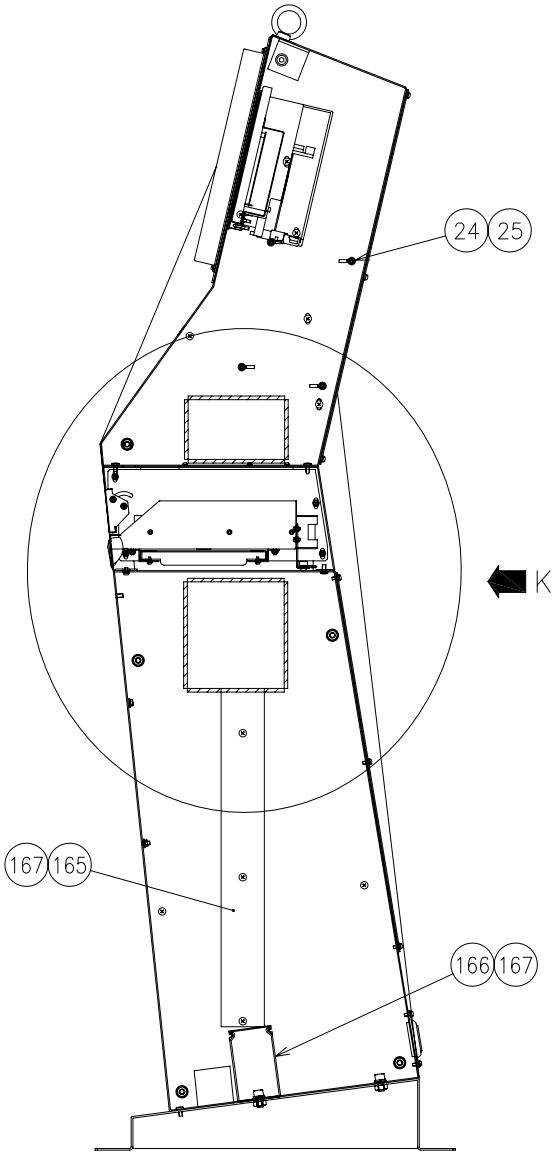

SECTION J–J

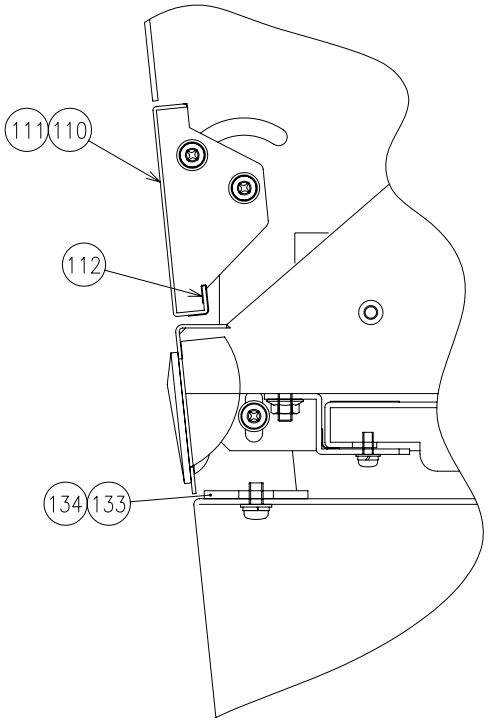

DETAIL L

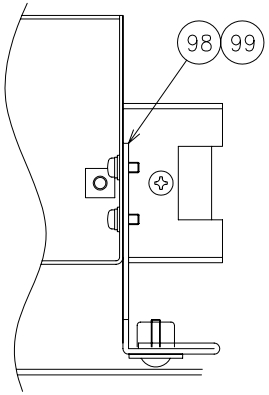

DETAIL M

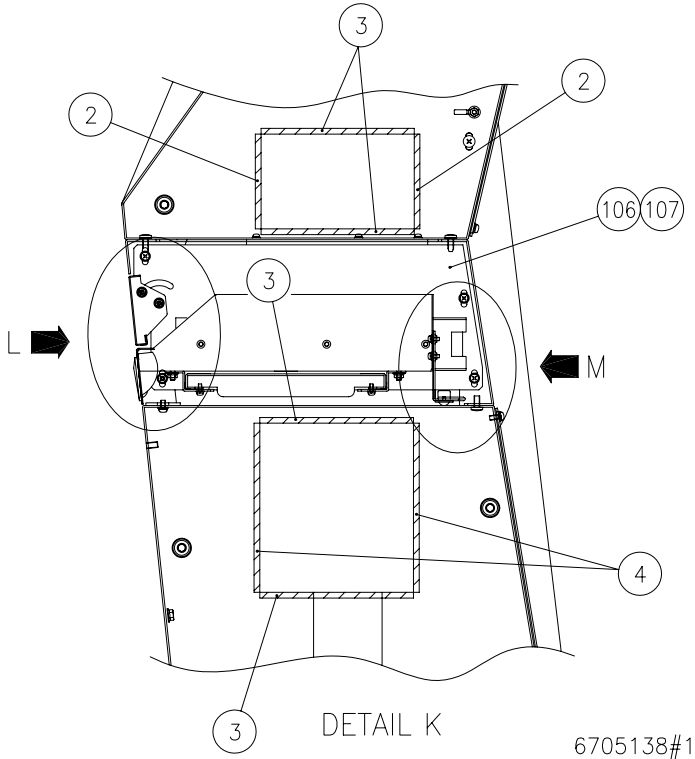

DETAIL K

6705138#1A
6705138#2A
6705138#3A

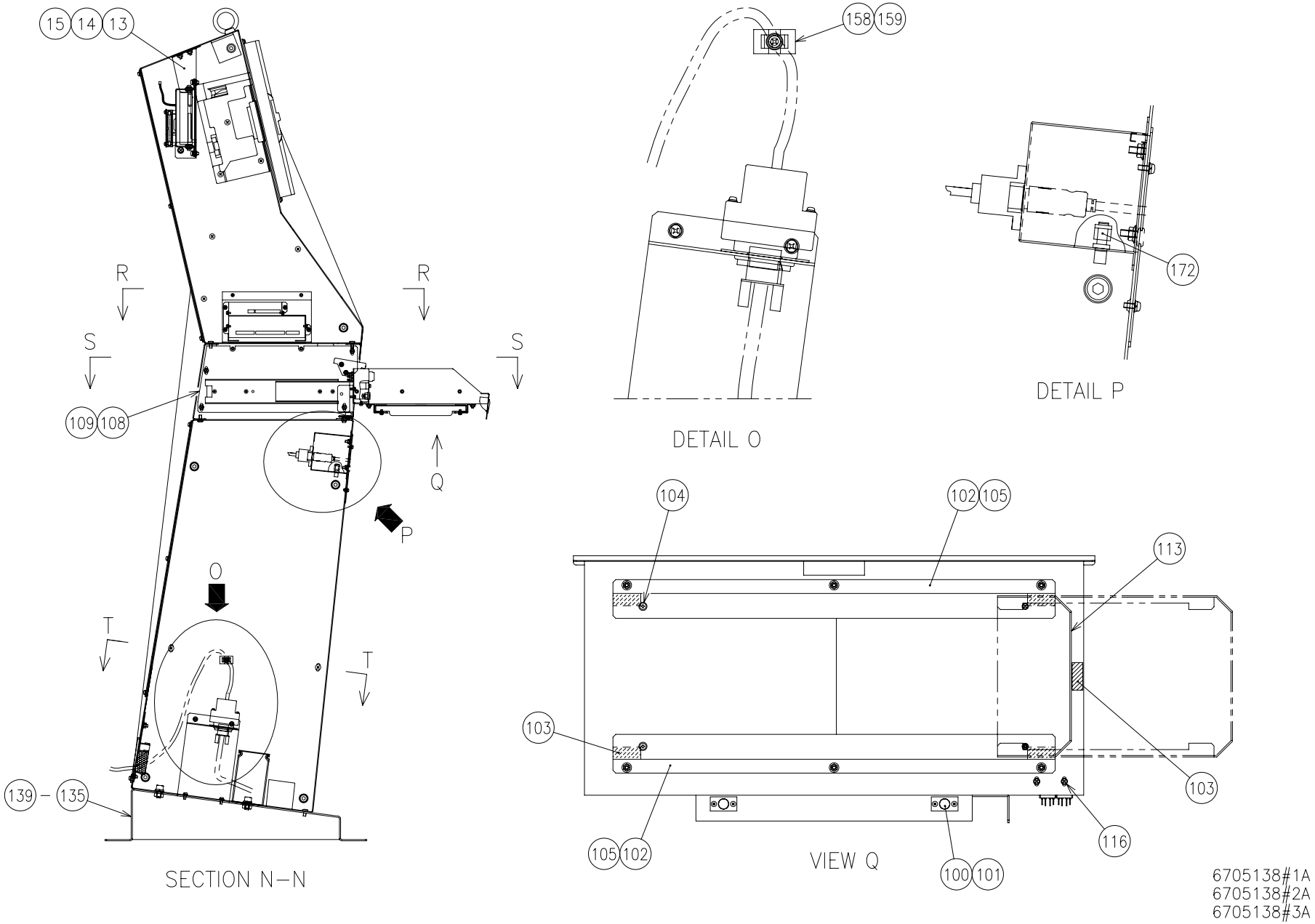
15
14
13
R
R
S
S
109
108
Q
P
O
T
T
139
135
SECTION N–N
158
159
DETAIL O
172
DETAIL P
104
102
105
113
103
103
105
102
116
VIEW Q
100
101
6705138#1A
6705138#2A
6705138#3A

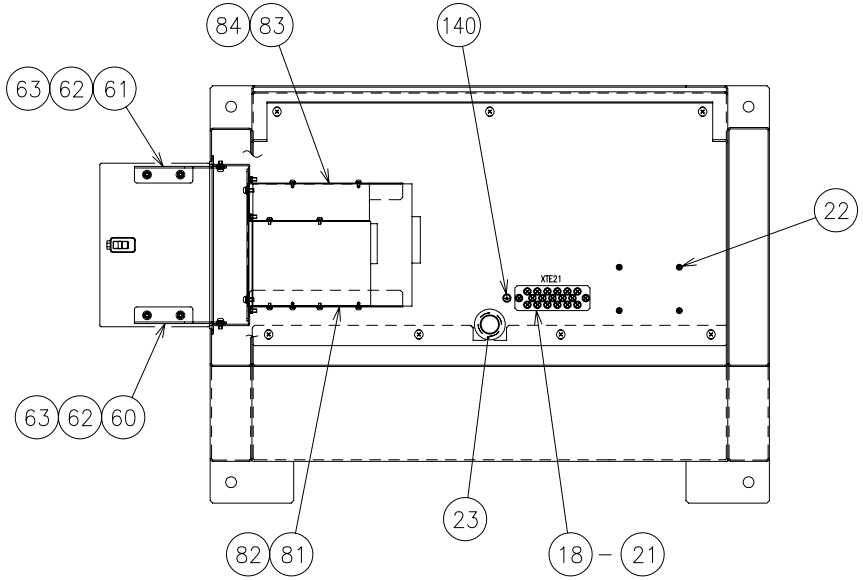

SECTION R–R

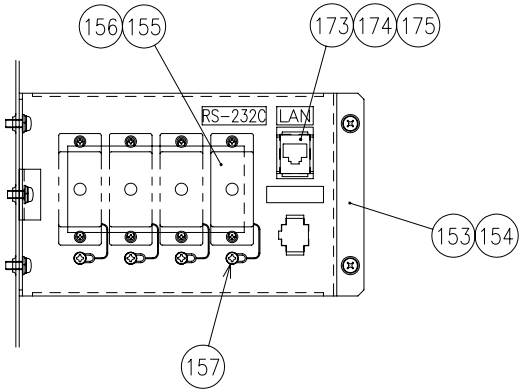

DETAIL U

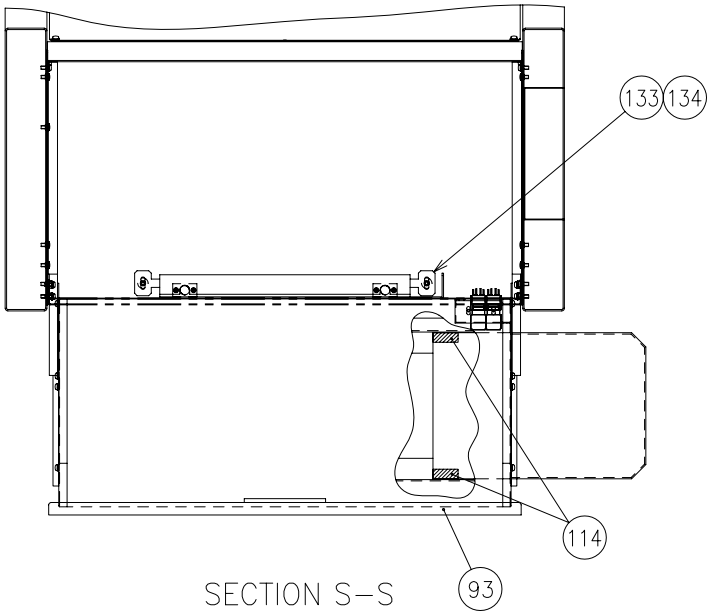

SECTION S–S

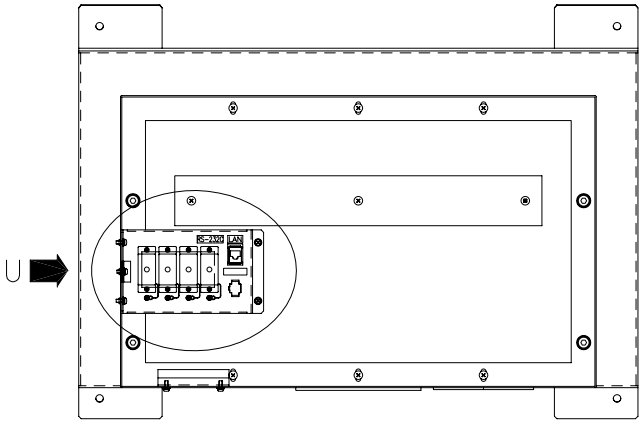

SECTION T–T

6705138#1A
6705138#2A
6705138#3A

Index	Code	Parts Name	Drawing No.	Type	Maker	Q'ty	Note
1	74418741	Operating Box	6705120			1	
2	74577565	Tape	P379138003	NO.8321(L=93)	HASHIMOTO	2	
3	74577570	Tape	P379138004	NO.8321(L=145)	HASHIMOTO	4	
4	74577572	Tape	P379138005	NO.8321(L=158)	HASHIMOTO	2	
5	79316339	Eye-Bolt	P338000002	M10		2	
6	74574770	EMI Shield	P869518047	UC-3E0689-0.5M	KITAGAWA	4	
7	74574770	EMI Shield	P869518004	UC-3E0689-0.54M	KITAGAWA	6	
8	74574770	EMI Shield	P869518129	UC-3E0689-0.394M	KITAGAWA	2	
9	74574770	EMI Shield	P869518081	UC-3E0689-0.3M	KITAGAWA	2	
10	74574770	EMI Shield	P869518027	UC-3E0689-0.104M	KITAGAWA	2	
11	74574770	EMI Shield	P869518054	UC-3E0689-0.044M	KITAGAWA	2	
12	74574770	EMI Shield	P869518033	UC-3E0689-0.22M	KITAGAWA	2	
13	74418745	HDD Bracket	6700336 A			1	
14	71366867	Flange Nut	P332040002	M4		4	
15	74577592	Pan Head Screw with Washer	P334200206	M5X10(Chromate P-3)		1	
16	71515622	HDD	P618068002	A08B-0084-H110	FANUC	1	
17	74577592	Pan Head Screw with Washer	P334200206	M5X10(Chromate P-3)		4	
18	74571909	Ground Bar	6588228			1	
19	74577596	Pan Head Screw with Washer	P334200186	M4X8(Chromate P-3)		2	

Index	Code	Parts Name	Drawing No.	Type	Maker	Q'ty	Note
20	31201136	Pan Head Screw with Washer	P334208002	M4X10(NickelP-4for Thin Board)	SANKO Industry	17	
21	74577522	Strut Parts	P631408056	TP-511-10	TOYO	2	
22	74577588	Pan Head Screw with Washer	P334200182	M3X8(Chromate P-3)		4	
23	74571911	Bush For Cable	P229112094	C-30-SG-28A-UL	TAKIGEN	1	Bush For Cable
24	74417594	Cable Band	P381058122	CS-7	SHINAGAWA	5	
25	71366867	Flange Nut	P332040002	M4		5	
26	74416318	PW Operation Panel	6705252 A			1	EXP
26	74417752	PW Operation Panel (CE)	6705290			1	CE
27	74577552	Cable (SS15)	670617218A			1	
28	74416349	Name Plate #1	6706214			2	
29	74577550	Bracket (Reset)	6705258 A			1	
30	74575534	Push Switch (Light)	P822064019	AH165-TGLW11E3/0182	FUJI Electric	1	
31	74577564	Push Switch (Light)	P822064050	AH165-TGLW22E3/0182	FUJI Electric	1	
32	74561317	Push Switch (Light)	P822144028	AH165-SLW11E3/0182	FUJI Electric	1	
33	71367058	Flange Nut	P332040009	M3		2	
34	71366867	Flange Nut	P332040002	M4		6	
35	74386779	Push Switch (Light)	P822144023	AH165-SGLW11E3/0182	FUJI Electric	1	
36	71369438	Legend Plate (RESET)	6584195			1	
37	74416327	Legend Plate (Reset)	6705254			1	EXP

Index	Code	Parts Name	Drawing No.	Type	Maker	Q'ty	Note
37	74417753	Legend Plate (Reset)	6705291			1	CE
38	74416328	Program Controller Module	P767478016	A13B-0196-B031	FANUC	1	
39	74419310	Pan Head Screw with Washer	P334200258	M3X10(Black Chromate P-4)		8	
40	74419311	Skirt	6700323 A			1	
41	74577573	Pan Head Screw	P335030013	Bind-Type-2-5X12(Chromate)		3	
42	74419312	Side Plate R (N)	6705130 A			1	
43	36367621	Hex Soc Cap Screw	P330230005	M8X16		5	
44	86610326	Spring Washer	P336050006	8		6	
45	79567109	Washer	P336000006	8(Regular Round)		6	
46	74577573	Pan Head Screw	P335030013	Bind-Type-2-5X12(Chromate)		8	
47	74419313	Side Plate L (N)	6705129 A			1	
48	36367621	Hex Soc Cap Screw	P330230005	M8X16		5	
49	86610326	Spring Washer	P336050006	8		6	
50	79567109	Washer	P336000006	8(Regular Round)		6	
51	74577573	Pan Head Screw	P335030013	Bind-Type-2-5X12(Chromate)		8	
52	74419314	CD Bracket 1	6705127 A			1	
53	71366867	Flange Nut	P332040002	M4		4	
54	74418750	Door Packing (1)	6705028			2	
55	74419315	Door Packing (2)	6705029 A			2	

Index	Code	Parts Name	Drawing No.	Type	Maker	Q'ty	Note
56	74574770	EMI Shield	P869518032	UC-3E0689-0.21M	KITAGAWA	2	
57	74574770	EMI Shield	P869518067	UC-3E0689-0.136M	KITAGAWA	2	
58	74574770	EMI Shield	P869518072	UC-3E0689-0.18M	KITAGAWA	2	
59	74574770	EMI Shield	P869518057	UC-3E0689-0.08M	KITAGAWA	2	
60	74418756	CD Rotary Shaft R	6700326			1	
61	74418757	CD Rotary Shaft (L)	6700327			1	
62	74577525	Pan Head Screw with Washer	P334200183	M4X10(Chromate P-3)		2	
63	74418758	Bushing	P389088005	GFM-0405-03	Captain Industries	2	
64	36387862	Seal (1)	6654487	E-7000A		1	
65	74418759	CD Panel 1	6705128			1	
66	74416219	Nut	P332238004	M4(Chromate)	SANKO Industry	4	
67	74418760	Door Closer	P317402018	CP-420-A-3	TAKIGEN	1	
68	74418761	CD Cover	6705569 A			1	
69	74577525	Pan Head Screw with Washer	P334200183	M4X10(Chromate P-3)		4	
70	74418762	Sponge Rubber	P230588198	NEO-180(3X5X190)	IRUMAGAWA RUBBER	1	
71	74577562	FDD	P618058003	A08B-0084-K001	FANUC	1	
72	74577589	Pan Head Screw with Washer	P334200181	M3X6(Chromate P-3)		4	
73	74577563	CD-ROM Drive	P618078002	A08B-0084-K010	FANUC	1	
74	74577589	Pan Head Screw with Washer	P334200181	M3X6(Chromate P-3)		4	

Index	Code	Parts Name	Drawing No.	Type	Maker	Q'ty	Note
75	74574770	EMI Shield	P869518052	UC-3E0689-0.025M	KITAGAWA	1	
76	74574770	EMI Shield	P869518123	UC-3E0689-0.05M	KITAGAWA	1	
77	74574770	EMI Shield	P869518054	UC-3E0689-0.044M	KITAGAWA	1	
78	74574770	EMI Shield	P869518056	UC-3E0689-0.067M	KITAGAWA	1	
79	74574770	EMI Shield	P869518062	UC-3E0689-0.108M	KITAGAWA	1	
80	74574770	EMI Shield	P869518070	UC-3E0689-0.152M	KITAGAWA	1	
81	74418766	CD Holder 1	6700337 B			1	
82	74417514	Nut	P332238003	M3(Chromate)	SANKO Industry	2	
83	74418767	CD Holder 2	6700338 A			1	
84	74417514	Nut	P332238003	M3(Chromate)	SANKO Industry	2	
85	74418768	Cable Clamp (BU)	6705566 A			1	
86	74417737	Nut	P332238005	M5(Chromate)	SANKO Industry	2	
87	74418769	Cable Clamp (BD)	6705567			1	
88	31201060	Pan Head Screw with Washer	P334200166	M4X10(Black Chromate P-3)		2	
89	74418770	Cable Cushion (B)	6705568			2	
90	74419316	Cable Cover	6705125 A			1	
91	31201060	Pan Head Screw with Washer	P334200166	M4X10(Black Chromate P-3)		4	
92	74418772	Label (RS232C/LAN)	6705123			1	
93	74418773	Case	6700319			1	

Index	Code	Parts Name	Drawing No.	Type	Maker	Q'ty	Note
94	74418774	Grip	P317152027	AP-197-3-1(Black)	TAKIGEN	1	
95	74577531	Pan Head Screw with Washer	P334200200	M3X8(Black Chromate P-3)		4	
96	74575578	Slide Rail	P384098003	8400-10	SUGATSUNE	1	
97	74577593	Bind Screw	P334140005	M4X8(Cross Recessed Head,Chromate)		13	
98	74419317	Click Bracket	6700335 B			1	
99	74577531	Pan Head Screw with Washer	P334200200	M3X8(Black Chromate P-3)		4	
100	74577594	Door Closer	P317445006	TL-43-1	TOCHIGIYA	2	
101	74575583	Flat Head Screw	P334110086	M2.6X10		4	
102	74418776	Slide Support	6700320			2	
103	74418780	Tape	6705804 A			5	
104	74577588	Pan Head Screw with Washer	P334200182	M3X8(Chromate P-3)		4	
105	74416219	Nut	P332238004	M4(Chromate)	SANKO Industry	6	
106	74418777	Rail Panel L	6700321			1	
107	74577525	Pan Head Screw with Washer	P334200183	M4X10(Chromate P-3)		4	
108	74418778	Rail Panel R	6700324			1	
109	74577525	Pan Head Screw with Washer	P334200183	M4X10(Chromate P-3)		4	
110	74416308	Door	6703114 A			1	
111	74577597	Pan Head Screw with Washer	P334200238	M4X12(Black Chromate P-3)		4	
112	74418780	Tape	6705804 A			2	

Index	Code	Parts Name	Drawing No.	Type	Maker	Q'ty	Note
113	74418779	Slide Table	6700322			1	
114	74418780	Tape	6705804 A			2	
115	74419318	PS2 Panel	6700332 A			1	
116	74577568	Pan Head Screw with Washer	P334200198	M3X10(Black Chromate P-3)		2	
117	74575485	Pan Head Screw	P334100129	M2X15		2	
118	10383618	Conical Spring Washer	P336040028	2L-5		2	
119	74577521	Washer	P336000109	2(Polished Round)		2	
120	71132527	Nut	P332000105	M2		2	
121	74572004	Cable (KEY)	658814734			1	
122	71516269	Pan Head Screw with Washer	P334200199	M3X12(Black Chromate P-3)		2	
123	74577553	Interface Cable	P342668001	WS-111-2000	WIESON	1	
124	74561317	Push Switch (Light)	P822144028	AH165-SLW11E3/0182	FUJI Electric	2	
125	74577551	Cable (SS13)	670312818A			1	
126	74418782	Rear Panel	6700331			1	
127	74577573	Pan Head Screw	P335030013	Bind-Type-2-5X12(Chromate)		8	
128	74418783	Stand Box	6705121			1	
129	74574770	EMI Shield	P869518057	UC-3E0689-0.08M	KITAGAWA	2	
130	74574770	EMI Shield	P869518066	UC-3E0689-0.13M	KITAGAWA	2	
131	74574770	EMI Shield	P869518123	UC-3E0689-0.05M	KITAGAWA	2	

Index	Code	Parts Name	Drawing No.	Type	Maker	Q'ty	Note
132	74574770	EMI Shield	P869518027	UC-3E0689-0.104M	KITAGAWA	2	
133	74418785	Click Bar	6700333			1	
134	74577525	Pan Head Screw with Washer	P334200183	M4X10(Chromate P-3)		1	
135	74418786	Stand Base	6705122			1	
136	36367621	Hex Soc Cap Screw	P330230005	M8X16		4	
137	86610326	Spring Washer	P336050006	8		4	
138	79567109	Washer	P336000006	8(Regular Round)		4	
139	74577573	Pan Head Screw	P335030013	Bind-Type-2-5X12(Chromate)		6	
140	74562006	Ground Mark	6800994	S500288		2	
141	74418787	Operating Box Cover	6705126			2	
142	31201060	Pan Head Screw with Washer	P334200166	M4X10(Black Chromate P-3)		16	
143	74379098	Charging Mark	P360200003	JISB6015-80H		2	
144	71360557	Name Plate (AMADA #60)	1660593			2	
145	74416094	Grip	P317152025	AP-197-1-3(Black)	TAKIGEN	2	
146	74418788	BRCN Bracket	6700344			1	
147	71366867	Flange Nut	P332040002	M4		4	
148	71516269	Pan Head Screw with Washer	P334200199	M3X12(Black Chromate P-3)		2	
149	74577532	Accessory For Connector	P862188092	TK-UCAP	SANWA SUPPLY	2	
150	74577553	Interface Cable	P342668001	WS-111-2000	WIESON	1	

Index	Code	Parts Name	Drawing No.	Type	Maker	Q'ty	Note
151	74418789	BS Blank Panel	6700343			1	
152	74577568	Pan Head Screw with Washer	P334200198	M3X10(Black Chromate P-3)		4	
153	74418790	LAN Bracket	6700334 B			1	
154	74577525	Pan Head Screw with Washer	P334200183	M4X10(Chromate P-3)		4	
155	71376244	Dust Cap	P862188045	DB-59-J2	JAE	1	Accessory For Connector
156	74418791	Cable (JD33)	670312819A			1	
157	74577588	Pan Head Screw with Washer	P334200182	M3X8(Chromate P-3)		1	
158	31184309	Cable Band	P381058076	TC-142	KITAGAWA	1	
159	74577525	Pan Head Screw with Washer	P334200183	M4X10(Chromate P-3)		1	
160	74575515	Plate (L)	6706174			2	
161	78184843	Bush For Cable	P229112046	C-30-SG-42A	TAKIGEN	1	
162	74577568	Pan Head Screw with Washer	P334200198	M3X10(Black Chromate P-3)		8	
163	74575519	Flexible Panel	6703165			1	
164	74577597	Pan Head Screw with Washer	P334200238	M4X12(Black Chromate P-3)		4	
165	74577548	Duct For Wiring	P869508360	KD-610-20T(L=465)	KOWA KASEI	1	
166	74577549	Duct For Wiring	P869508361	KD-610-20C(L=440)	KOWA KASEI	1	
167	74577573	Pan Head Screw	P335030013	Bind-Type-2-5X12(Chromate)		6	
168	74577556	Legend Plate(HDD)(4-languages)	6707432			1	
169	74577557	Shim (T1.0)	6705951 A			5	

Index	Code	Parts Name	Drawing No.	Type	Maker	Q'ty	Note
170	74577558	Shim (T0.5)	6705956			5	
171	74577559	Anchor	P338213015	C-1260	SANKO Technology	4	
172	74417755	Cable Band	P381058129	PCS-5	NICS	1	
173	74418792	Wiring Socket	P862068007	NW080-88S-SI-C6-SH	MISUMI	1	
174	74418793	Network Cable	P342658001	NWNMC5E-STN-SSMB-YL-1	MISUMI	1	
175	74418794	Accessory for Computer	P767788018	LD-DUST/WH	ELECOM	1	
176	75429843	Legend Plate (Bar Code)	6802576			1	
177	79564804	Hex Soc Cap Screw	P330230006	M8X20		1	
178	79564804	Hex Soc Cap Screw	P330230006	M8X20		1	
179	31201136	Pan Head Screw with Washer	P334208002	M4X10(NickelP-4for Thin Board)	SANKO Industry	1	
180	36544032	Toothed Washer	P336030022	A-4(Chromate)		1	
181	75429784	Serial Plate	E491001673	M8004701	AEL	1	
182	71515736	Software	P362018003	A08B-0084-J550#EN	FANUC	1	List Only
183	71516399	Fuse	P842068031	A08B-0084-K020	FANUC	1	List Only
184	71515735	Accessory (Program Controller)	P767485409	A08B-0082-K020	FANUC	1	List Only
185	71516387	Program Controller Module	P767478018	A08B-0084-H010	FANUC	1	List Only
186	71515637	Program Controller Module	P767478017	A08B-0084-H001	FANUC	1	List Only
187	71515635	Control Cable	P342608005	A02B-0207-K801	FANUC	1	
188	71516388	Control Cable	P342608008	A08B-0084-K800	FANUC	1	

Index	Code	Parts Name	Drawing No.	Type	Maker	Q'ty	Note
189	71516389	Program Controller Module	P767478019	A08B-0084-J001	FANUC	1	List Only
190	71515734	Software	P362008001	A08B-0084-K790	FANUC	1	List Only

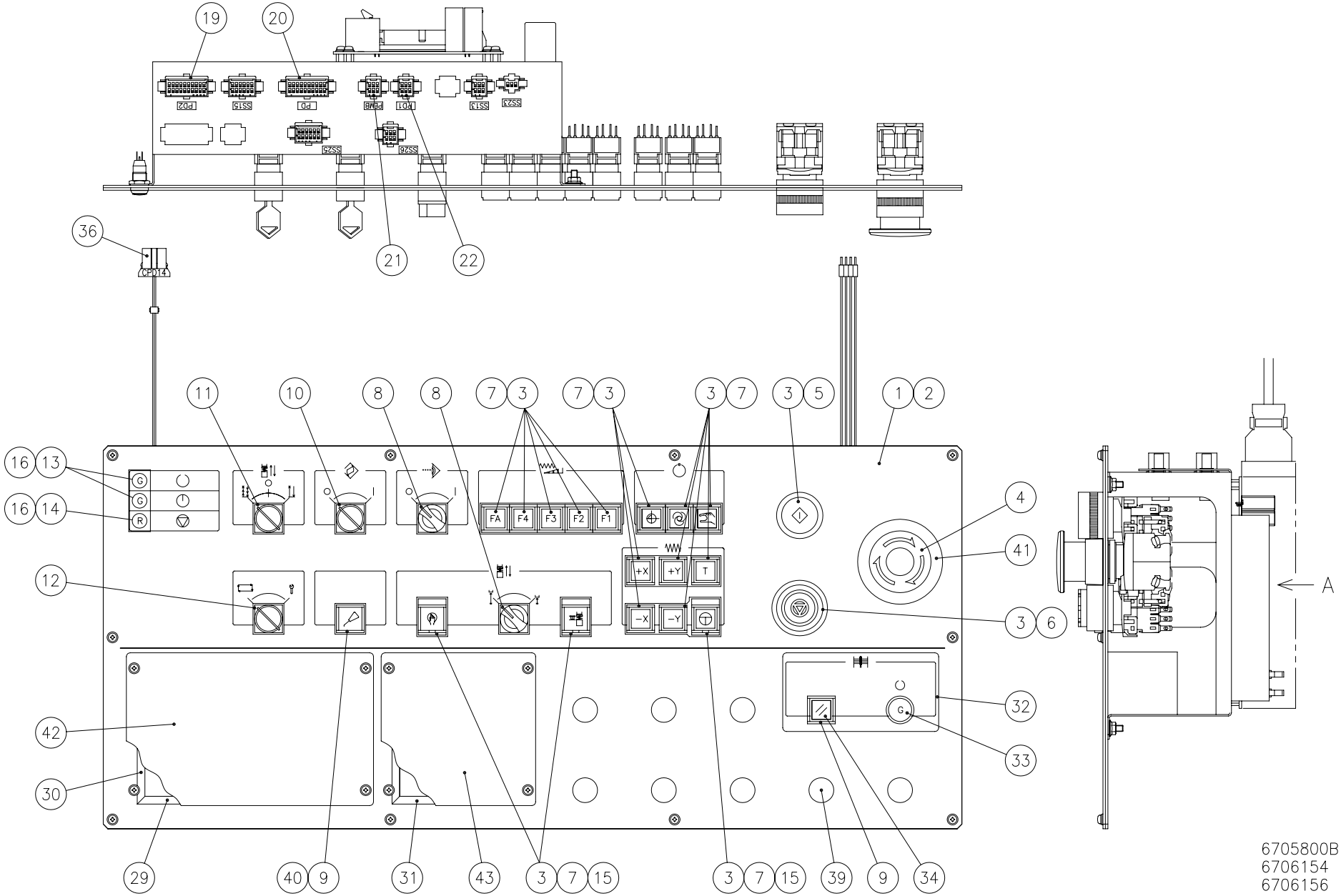
19
20
PD2
SS15
PD
PBM8
PD1
SS13
SS23
SS25
SS26
36
CPD14
21
22
11
10
8
8
7
3
7
3
3
7
3
5
1
2
16
13
16
14
G
G
R
FA
F4
F3
F2
F1
+X
+Y
T
−X
−Y
4
41
12
3
6
A
32
G
33
42
30
29
40
9
31
43
3
7
15
3
7
15
39
9
34
6705800B
6706154
6706156

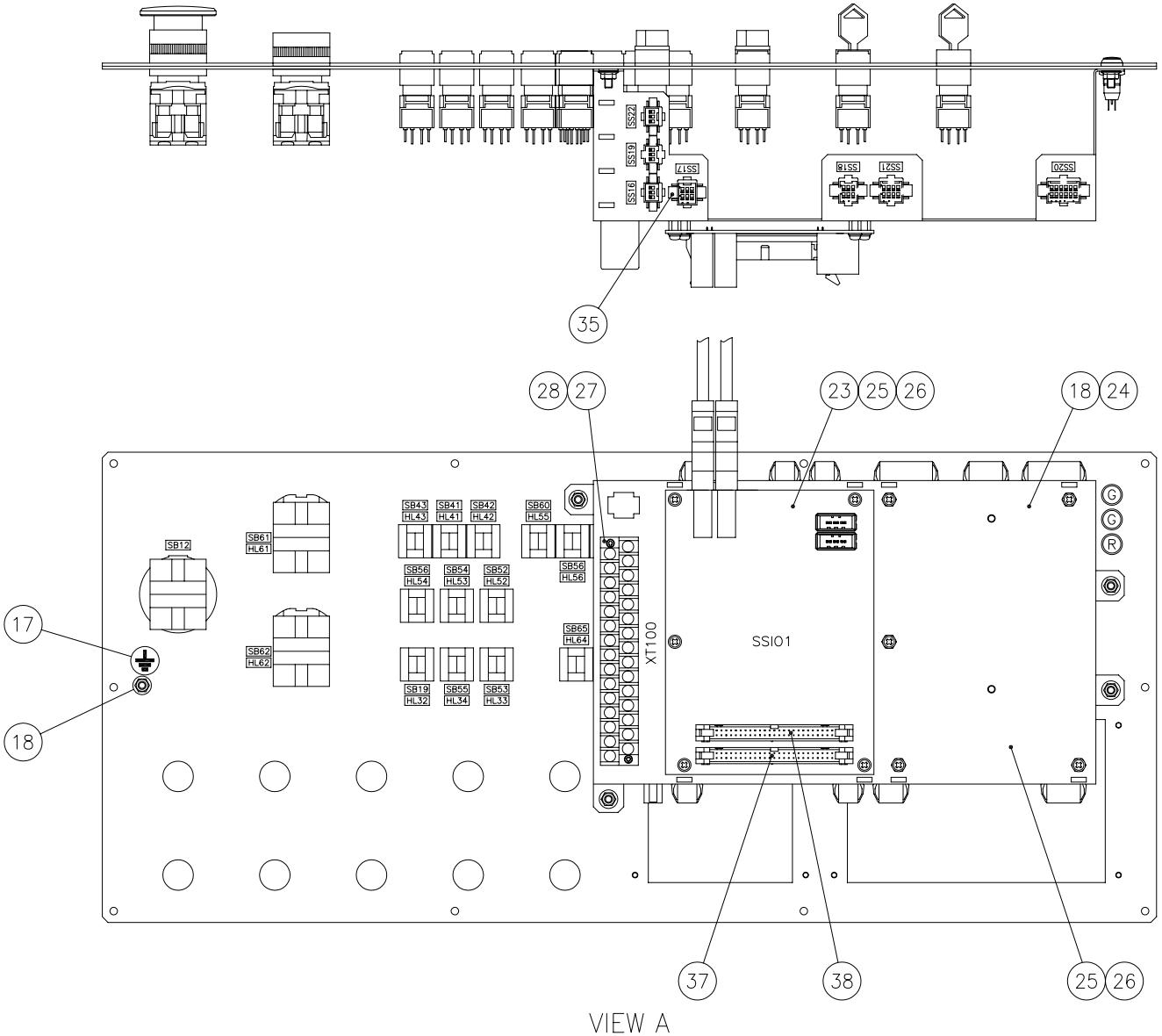

VIEW A

6705800B
6706154
6706156

Index	Code	Parts Name	Drawing No.	Type	Maker	Q'ty	Note
1	74417762	NC Panel U (F)	6706198 B			1	
2	74577531	Pan Head Screw with Washer	P334200200	M3X8(Black Chromate P-3)		10	
3	74416349	Name Plate #1	6706214			1	
4	74417763	Push Switch	P821084130	AR22V5R-02R	FUJI Electric	1	
5	74417764	Push Switch (Light)	P822084043	AR22G1L-10E3W	FUJI Electric	1	
6	74417765	Push Switch (Light)	P822084038	AR22E5L-01E3W	FUJI Electric	1	
7	74561317	Push Switch (Light)	P822144028	AH165-SLW11E3/0182	FUJI Electric	16	
8	74572036	Key Select Switch	P820004029	AH165-SP2B11	FUJI Electric	2	
9	74386780	Push Switch	P821064013	AH165-SGFW11	FUJI Electric	2	
10	74417756	Key Select Switch	P820014165	AH165-SJ2D11A	FUJI Electric	1	
11	74417766	Key Select Switch	P820014166	AH165-SJK3C22B	FUJI Electric	1	
12	74417767	Key Select Switch	P820014167	AH165-SJ2D11C	FUJI Electric	1	
13	74381663	Indicator Apparatus	P843018002	BD-1402G	OKAYA	2	
14	74417768	Indicator Apparatus	P843018011	BD-1401R	OKAYA	1	
15	78189420	Protect Cover	P821804014	AHX671	FUJI Electric	3	Accessory For Switch
16	74417757	Resistor	P841128037	RSS1-122	KOA	3	
17	74562006	Ground Mark	6800994	S500288		1	
18	71366867	Flange Nut	P332040002	M4		5	
19	74416345	Cable (PD2)	670526004A			1	

Index	Code	Parts Name	Drawing No.	Type	Maker	Q'ty	Note
20	74416346	Cable (PD)	670617204B			1	
21	74575593	Cable (PEMB)	670617207			1	
22	74416347	Cable (PD1)	670617205A			1	
23	74575595	Cable (SS10)	670312810			1	
24	74416348	Panel IO Bracket	6705262			1	
25	71515570	Strut Parts	P631408090	FS-10	LOGY ELECTRIC	10	
26	74577588	Pan Head Screw with Washer	P334200182	M3X8(Chromate P-3)		10	
27	71515659	Block Terminal	P864008247	PS7-30A	YOSHIDA Electric	1	
28	74417758	Pan Head Screw	P335030011	Type-3,2.6X6		2	
29	74574770	EMI Shield	P869518134	UC-3E0689-0.146M	KITAGAWA	2	
30	74574770	EMI Shield	P869518060	UC-3E0689-0.096M	KITAGAWA	4	
31	74574770	EMI Shield	P869518135	UC-3E0689-0.086M	KITAGAWA	2	
32	74416350	Safety Device Operation Panel	6706159 A			1	EXP
32	74417769	Safety Device Operation Panel	6705292			1	CE
33	74572041	Indicator Apparatus	P843024010	AH165-ZMGE2	FUJI Electric	1	
34	71369438	Legend Plate (RESET)	6584195			1	
35	74416351	Cable (SS17)	670617212A			1	
36	74416352	Cable (SS12)	670246009A			1	
37	74417761	Cable (C61)	670526001B			1	

Index	Code	Parts Name	Drawing No.	Type	Maker	Q'ty	Note
38	74417770	Cable (C71)	670526002B			1	
39	71360671	Blind Plug	P229138005	AHX622-B	FUJI Electric	8	
40	74417772	Legend Plate (Oil Supply)	6705283			1	for CE
41	36540202	EM Sheet 22	6654549 A			1	
42	74417773	Clamp Positioner Blank Panel	6706155			1	
43	74417774	Sub Punch Blank Panel	6706157			1	

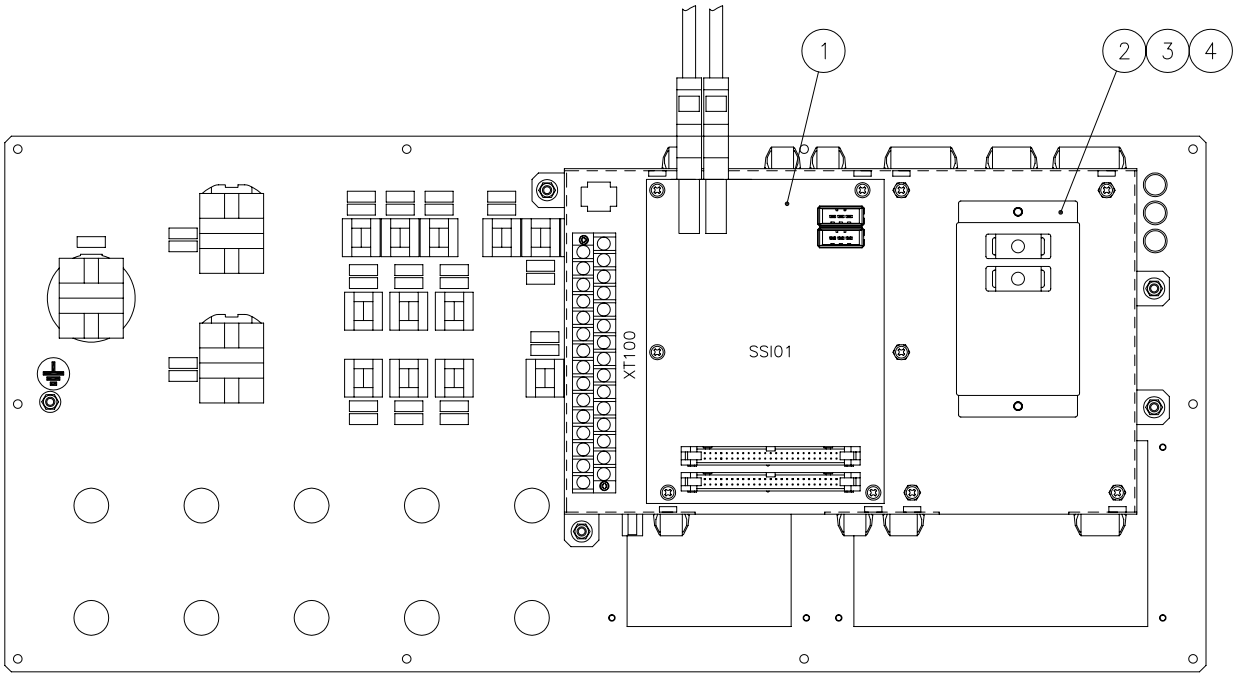

NC Panel

6706179

Control Device(9) From Serial No.36102001 and after

Index	Code	Parts Name	Drawing No.	Type	Maker	Q'ty	Note
1	71369424	Accessory (Program Controller)	P767485288	A20B-2002-0521	FANUC	1	
2	74417775	Accessory (Program Controller)	P767485264	A13B-0167-B001	FANUC	1	
3	74577596	Pan Head Screw with Washer	P334200186	M4X8(Chromate P-3)		2	
4	74417776	Cable (WC1)	670617221			1	

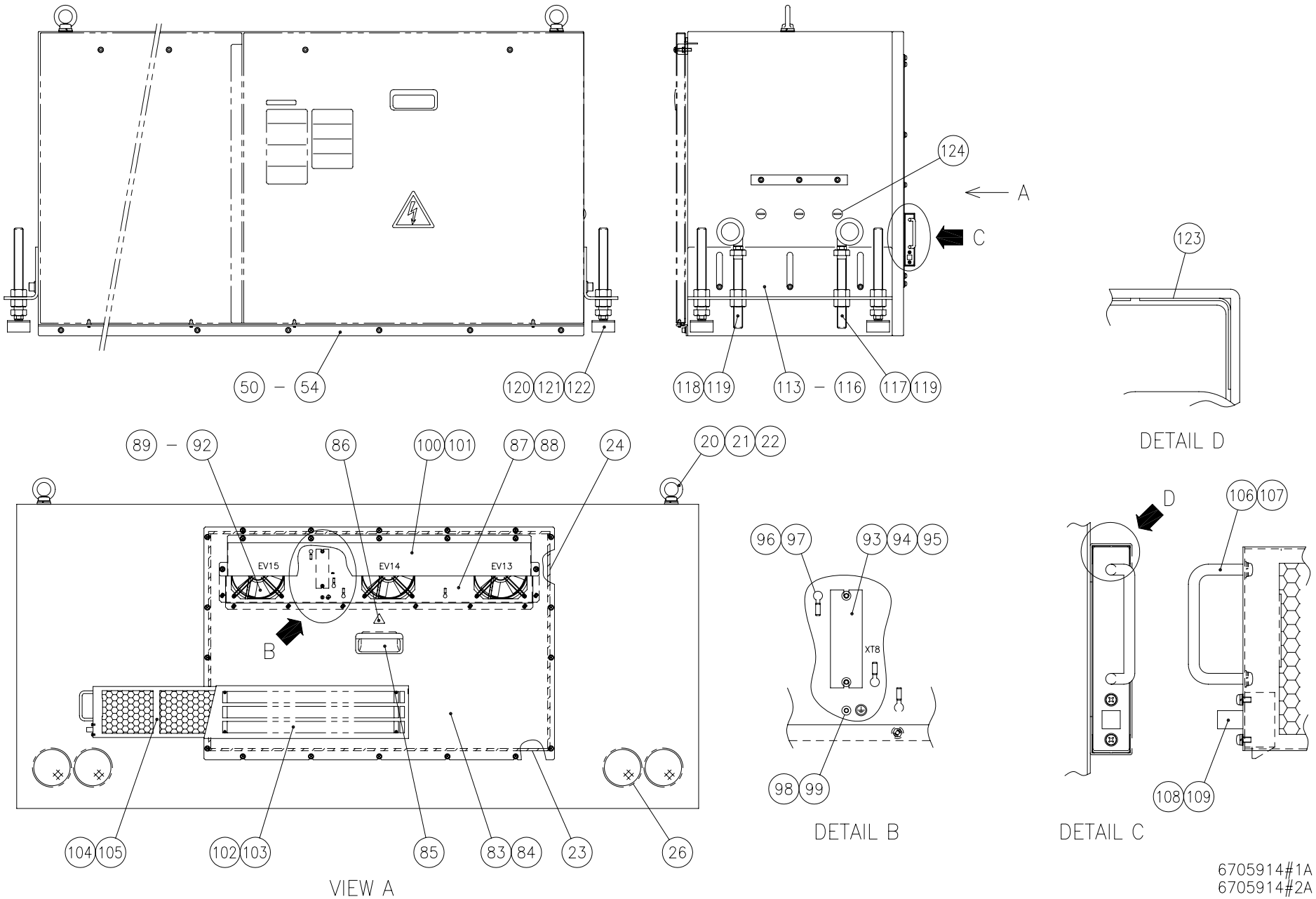
50 – 54
120 121 122
124
A
C
118 119
113 – 116
117 119
123
DETAIL D
89 – 92
86
100 101
87 88
24
20 21 22
EV15
EV14
EV13
B
104 105
102 103
85
83 84
23
26
VIEW A
96 97
93 94 95
XT8
98 99
DETAIL B
D
106 107
108 109
DETAIL C
6705914#1A
6705914#2A

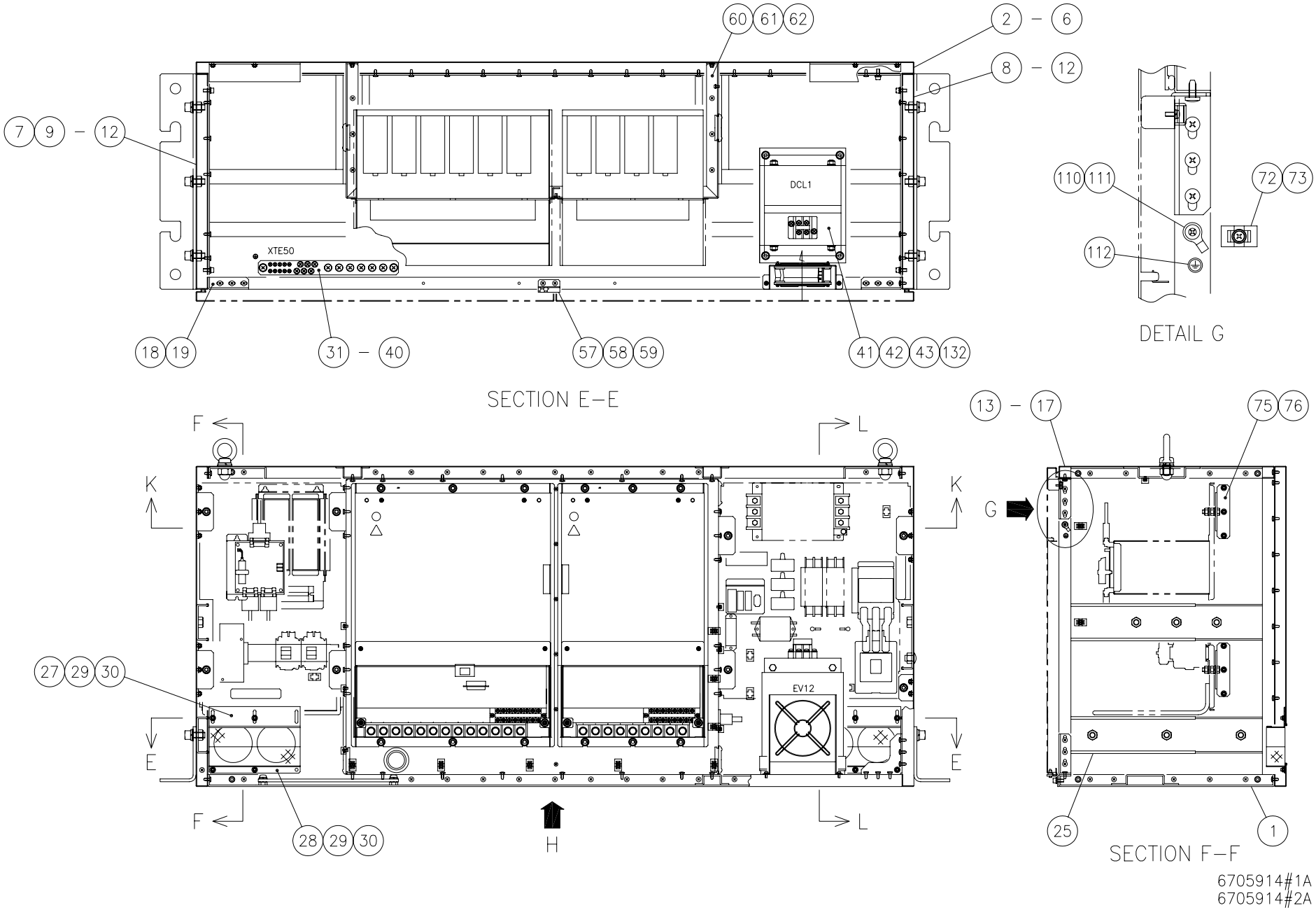
60 61 62
2 – 6
8 – 12
7 9 – 12
DCL1
XTE50
18 19
31 – 40
57 58 59
41 42 43 132
110 111
72 73
112
DETAIL G
SECTION E–E
F
L
K
G
13 – 17
75 76
27 29 30
EV12
E
28 29 30
H
25
1
SECTION F–F
6705914#1A
6705914#2A

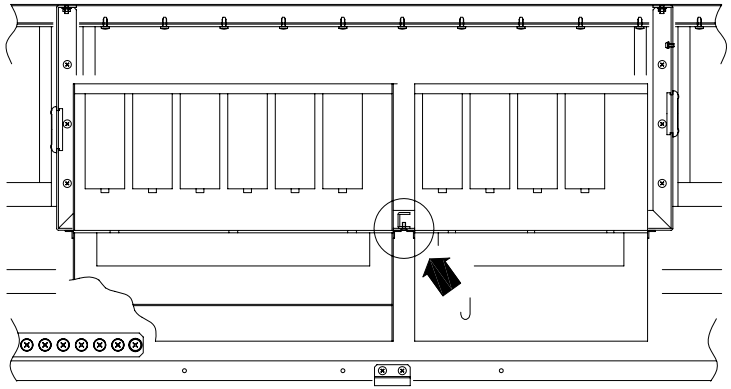

SECTION I–I

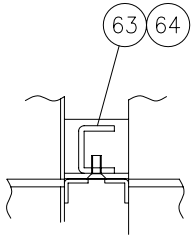

DETAIL J

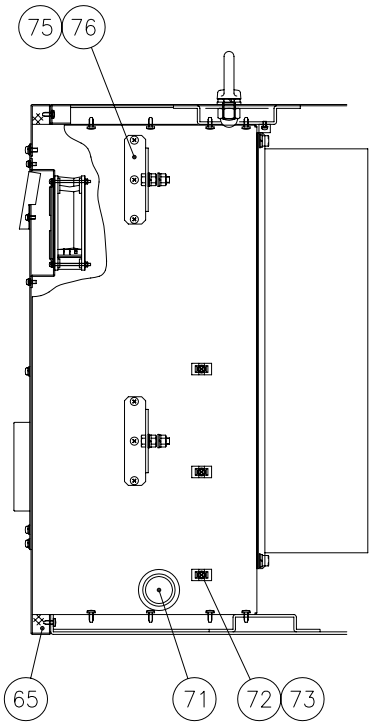

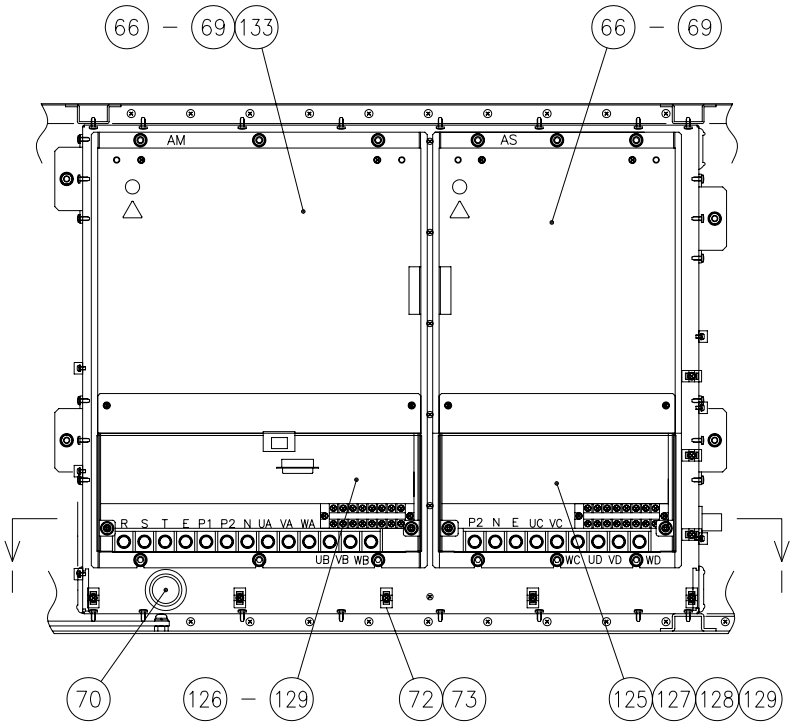

DETAIL H

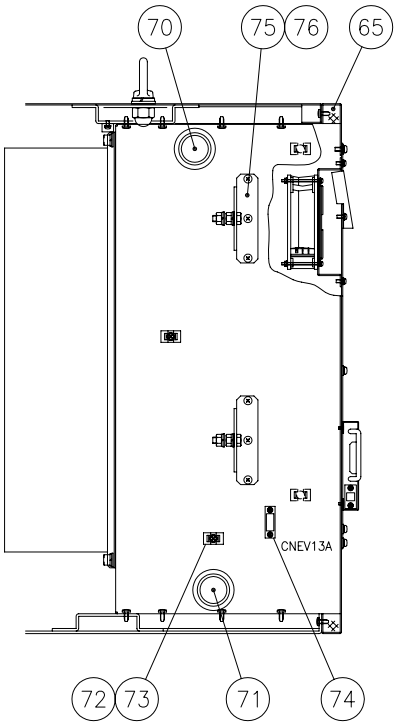

6705914#1A
6705914#2A

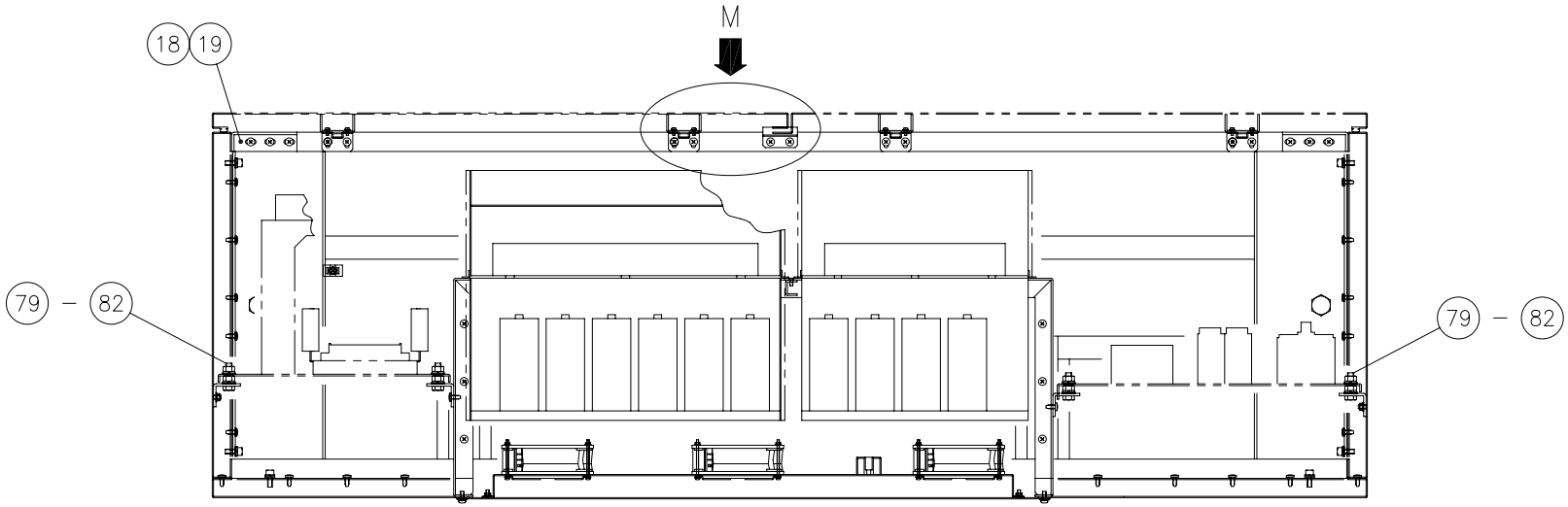

SECTION K–K

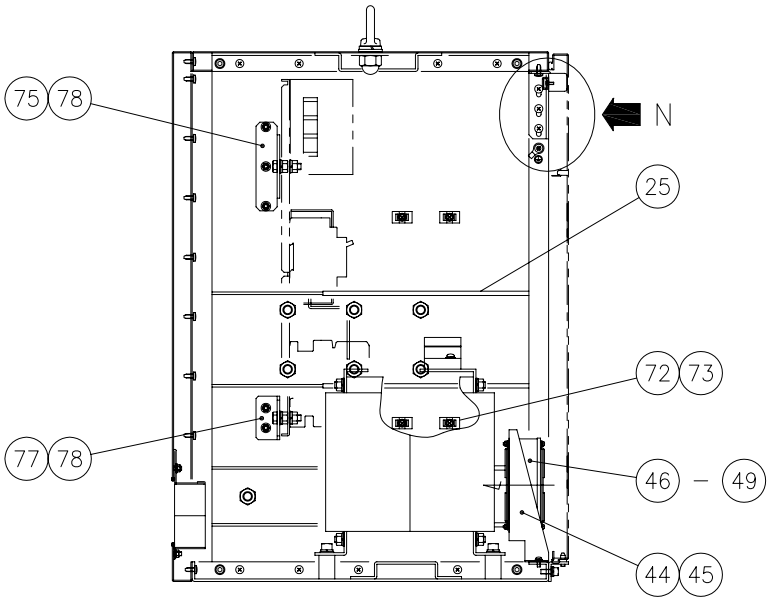

SECTION L–L

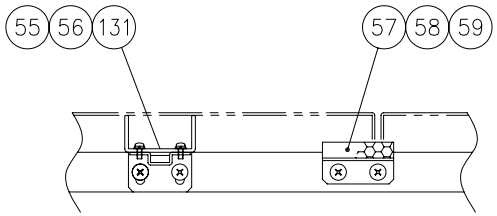

DETAIL M

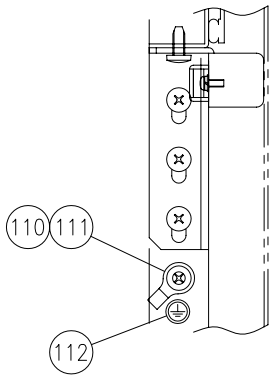

DETAIL N

6705914#1A
6705914#2A

Index	Code	Parts Name	Drawing No.	Type	Maker	Q'ty	Note
1	74418795	Base	6705113			1	
2	74418796	Rear Plate (CE)	6705114			1	
3	36527154	Hex Soc Cap Screw	P330220007	M6X16		2	
4	36387467	Spring Washer	P336050048	6(Black Chromate)		2	
5	36387468	Washer	P336000107	6(Polished Round)		2	Black Chromate
6	74577573	Pan Head Screw	P335030013	Bind-Type-2-5X12(Chromate)		19	
7	74418797	Side Plate (CE)	6705111			1	
8	74418798	Side Plate R (CE)	6705110			1	
9	36527154	Hex Soc Cap Screw	P330220007	M6X16		4	
10	36387467	Spring Washer	P336050048	6(Black Chromate)		4	
11	36387468	Washer	P336000107	6(Polished Round)		4	Black Chromate
12	74577573	Pan Head Screw	P335030013	Bind-Type-2-5X12(Chromate)		28	
13	74418799	Top Plate	6705112			1	
14	36527154	Hex Soc Cap Screw	P330220007	M6X16		6	
15	36387467	Spring Washer	P336050048	6(Black Chromate)		6	
16	36387468	Washer	P336000107	6(Polished Round)		6	Black Chromate
17	74577573	Pan Head Screw	P335030013	Bind-Type-2-5X12(Chromate)		29	
18	74417502	Corner Stay (B)	6702670 B			4	
19	74577573	Pan Head Screw	P335030013	Bind-Type-2-5X12(Chromate)		24	

Index	Code	Parts Name	Drawing No.	Type	Maker	Q'ty	Note
20	73117631	Eye-Bolt	P338000003	M16		2	
21	36385075	Washer	P336000040	16(Polished Round)		2	
22	79566731	Spring Washer	P336050010	16		2	
23	74574770	EMI Shield	P869518012	UC-3E0689-0.75M	KITAGAWA	2	
24	74574770	EMI Shield	P869518153	UC-3E0689-0.472M	KITAGAWA	2	
25	10380315	Grommet	P229125069	KG032-0.26M	KITAGAWA	8	
26	71377705	Grommet	P229125051	KG-016	KITAGAWA	4	
27	74418803	Wire Support T (AMP)	6705662			2	
28	74418804	Wire Support D (AMP)	6705663			2	
29	74418805	Wire Cushion	6701349			4	
30	74417737	Nut	P332238005	M5(Chromate)	SANKO Industry	8	
31	74418806	Ground Bar (30T)	6705727 A			1	
32	74417506	Pan Head Screw with Washer	P334200192	M8X16(Chromate P-3)		2	
33	74417671	Pan Head Screw	P334100132	M8X14(Nickel)		6	
34	74417525	Spring Washer	P336050042	8(Nickel)		6	
35	74417526	Washer	P336000103	8(Polished Round)-Nickel		6	
36	74417620	Pan Head Screw	P334100131	M6X12(Nickel)		6	
37	74417507	Spring Washer	P336050041	6(Nickel)		6	
38	74417641	Washer	P336000102	6(Polished Round)-Nickel		6	

Index	Code	Parts Name	Drawing No.	Type	Maker	Q'ty	Note
39	31201136	Pan Head Screw with Washer	P334208002	M4X10(NickelP-4for Thin Board)	SANKO Industry	10	
40	74562006	Ground Mark	6800994	S500288		1	
41	79564804	Hex Soc Cap Screw	P330230006	M8X20		4	
42	74561978	Spring Washer	P336050049	8(Black Chromate)		4	
43	74417532	Washer	P336000108	8(Polished Round)		4	Black Chromate
44	74418807	Filter Cover (AMP)	6705643			1	
45	74577525	Pan Head Screw with Washer	P334200183	M4X10(Chromate P-3)		2	
46	74565737	Fan	P538002028	109S078UL	SANYO Electric	1	
47	74568782	Finger Guard	P538072015	109-019E	SANYO Electric	2	Accessory For Fan
48	74417510	Pan Head Screw with Washer	P334200209	M3X50(Chromate P-3)		4	
49	74417514	Nut	P332238003	M3(Chromate)	SANKO Industry	4	
50	74418808	Door Stay	6705119			1	
51	36527154	Hex Soc Cap Screw	P330220007	M6X16		8	
52	36387467	Spring Washer	P336050048	6(Black Chromate)		8	
53	36387468	Washer	P336000107	6(Polished Round)		8	Black Chromate
54	74418809	Cover Set Pin	6211107	H8		4	
55	74418810	Latch Nut Bracket (2)	6705152			4	
56	74577573	Pan Head Screw	P335030013	Bind-Type-2-5X12(Chromate)		8	
57	74417504	Door Space	6701863 A			2	

Index	Code	Parts Name	Drawing No.	Type	Maker	Q'ty	Note
58	74577573	Pan Head Screw	P335030013	Bind-Type-2-5X12(Chromate)		4	
59	74417955	Door Packing	6700819			2	
60	74418811	Chassis C	6701348 B			1	
61	74417737	Nut	P332238005	M5(Chromate)	SANKO Industry	8	
62	74577573	Pan Head Screw	P335030013	Bind-Type-2-5X12(Chromate)		24	
63	74418812	Reinforcement (30T)	6705728 A			1	
64	10457023	Flat Head Screw	P334110007	M4X8		6	
65	74416083	Packing 2(EMF)	6705228			4	
66	79564804	Hex Soc Cap Screw	P330230006	M8X20		12	
67	74417532	Washer	P336000108	8(Polished Round)		12	Black Chromate
68	74561978	Spring Washer	P336050049	8(Black Chromate)		12	
69	31201120	Charging Mark	P360200001	JISB6015-20H		2	
70	74417654	Bush For Cable	P229112092	C-30-SG-42A-UL	TAKIGEN	2	
71	74418813	Bush For Cable	P229112086	C-30-SG-48A-UL	TAKIGEN	2	
72	31184309	Cable Band	P381058076	TC-142	KITAGAWA	21	
73	74577596	Pan Head Screw with Washer	P334200186	M4X8(Chromate P-3)		21	
74	74577588	Pan Head Screw with Washer	P334200182	M3X8(Chromate P-3)		2	
75	74418814	Chassis Bracket (AMP)	6705651			7	
76	74577573	Pan Head Screw	P335030013	Bind-Type-2-5X12(Chromate)		12	

Index	Code	Parts Name	Drawing No.	Type	Maker	Q'ty	Note
77	74418815	Chassis Bracket (G)	6700648			1	
78	74417737	Nut	P332238005	M5(Chromate)	SANKO Industry	11	
79	74311126	Bolt	P330030010	M8X35(All-thread)		8	
80	86610326	Spring Washer	P336050006	8		16	
81	74722770	Washer	P336000037	8(Polished Round)		16	
82	74384603	Nut	P332000068	M8(Type-2)		16	
83	74418816	Rear Cover	6705115			1	
84	74417512	Pan Head Screw with Washer	P334200196	M5X12(Black Chromate P-3)		18	
85	74416094	Grip	P317152025	AP-197-1-3(Black)	TAKIGEN	1	
86	31201120	Charging Mark	P360200001	JISB6015-20H		1	
87	74418817	Fan Plate (CE)	6705118			1	
88	74417737	Nut	P332238005	M5(Chromate)	SANKO Industry	16	
89	74565737	Fan	P538002028	109S078UL	SANYO Electric	3	
90	74568782	Finger Guard	P538072015	109-019E	SANYO Electric	3	Accessory For Fan
91	74417513	Pan Head Screw with Washer	P334200210	M3X50(NickelP-3)		12	
92	74417514	Nut	P332238003	M3(Chromate)	SANKO Industry	12	
93	31201096	Block Terminal	P864004037	TSU-615-8P	KIMDEN	1	
94	74570030	Pan Head Screw with Washer	P334200115	M4X10(Chromate P-4)		2	
95	31201097	Terminal Parts	P864052020	BNJ26FW	IDEC	1	

Index	Code	Parts Name	Drawing No.	Type	Maker	Q'ty	Note
96	74417594	Cable Band	P381058122	CS-7	SHINAGAWA	4	
97	74416219	Nut	P332238004	M4(Chromate)	SANKO Industry	2	
98	74577525	Pan Head Screw with Washer	P334200183	M4X10(Chromate P-3)		1	
99	74562006	Ground Mark	6800994	S500288		1	
100	74418818	Fan Cover	6701353			1	
101	31201060	Pan Head Screw with Washer	P334200166	M4X10(Black Chromate P-3)		7	
102	74418819	Slide Cover (AMP)	6705658			1	
103	36385653	Flat Head Screw	P334110002	M3X8		4	
104	74418820	Filter Cover (AMP)	6705644			1	
105	74418821	Filter (AMP)	6705653			1	
106	74418822	Grip	P317115009	THA-32-1	TOCHIGIYA	1	
107	74577525	Pan Head Screw with Washer	P334200183	M4X10(Chromate P-3)		2	
108	74418823	Door Closer	P317445008	TL-135L	TOCHIGIYA	1	
109	74577589	Pan Head Screw with Washer	P334200181	M3X6(Chromate P-3)		2	
110	74577573	Pan Head Screw	P335030013	Bind-Type-2-5X12(Chromate)		2	
111	74417599	Toothed Washer	P336030021	A-5(Chromate)		2	
112	74562006	Ground Mark	6800994	S500288		2	
113	74419319	Base Bracket (AMP)	6705652 A			2	
114	36367655	Hex Soc Cap Screw	P330250005	M12X30		6	

Index	Code	Parts Name	Drawing No.	Type	Maker	Q'ty	Note
115	71365039	Washer	P336000065	12(Polished Round)		6	
116	86610819	Spring Washer	P336050008	12		6	
117	74418825	Castor	P384002044	K-200GN-60	TAKIGEN	2	
118	74418826	Castor	P384002046	K-200GNS-60	TAKIGEN	2	
119	74418827	Adjusting Screw	6705661			4	
120	74418828	Vibration Isolator	P382002059	KN-50	KURASHIKI KAKO	4	
121	74418829	Adjusting Screw	6705660			4	
122	74418830	Nut	P332000166	M20(Black Chromate)		16	
123	74418831	Rubber Seal	P229178027	NL-W(Tape) 0.25X20X40M	SAKUSHIN Industry	4	
124	74418832	Plastic Screw	P334808005	CP-30-BC-12	TAKIGEN	3	
125	74418833	A Amplifier Cover (1)	6705124			1	
126	74417531	A Amplifier Cover	6705560 A			1	
127	86612728	Hex Soc Cap Screw	P330230002	M8X12		4	
128	74561978	Spring Washer	P336050049	8(Black Chromate)		4	
129	74417532	Washer	P336000108	8(Polished Round)		4	Black Chromate
130	74419042	Retaining Plate	P317462010	C-176-A-2	TAKIGEN	4	List Only
131	74577588	Pan Head Screw with Washer	P334200182	M3X8(Chromate P-3)		8	
132	74418834	DC Reactor	6707479			1	
133	74418835	Digital Servo Amplifier	6707478			1	

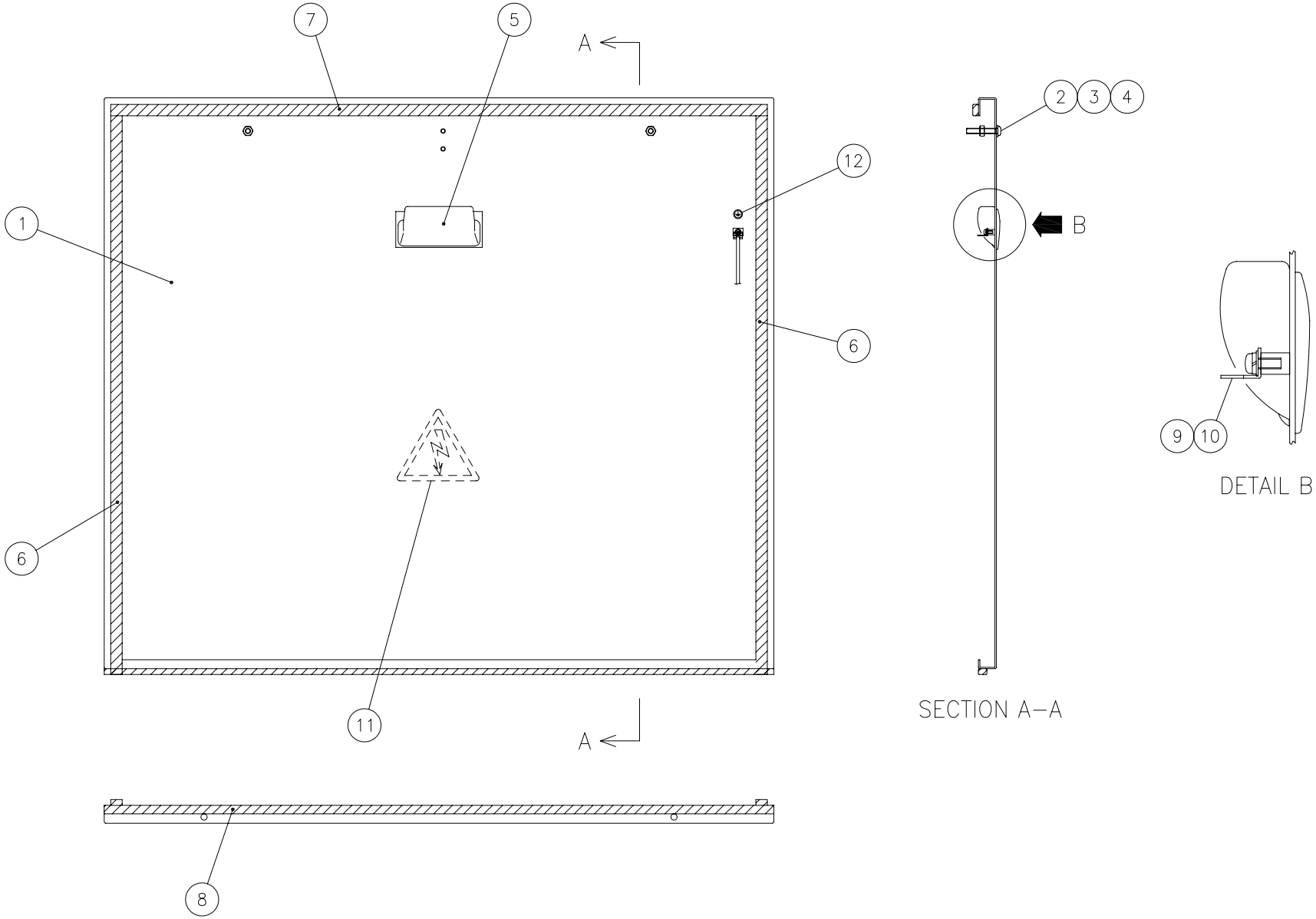

6705916

Control Device(11) From Serial No.36102001 and after

Index	Code	Parts Name	Drawing No.	Type	Maker	Q'ty	Note
1	74418836	Lid L	6705116			1	
2	74418837	Button Head Screw	P334500092	M6X40(Black Chromate)		2	
3	36387468	Washer	P336000107	6(Polished Round)		2	Black Chromate
4	79573514	Nut	P332000071	M6(Type-1)		2	
5	74416094	Grip	P317152025	AP-197-1-3(Black)	TAKIGEN	1	
6	74575391	EMI Shield	P869518154	UC-300279-0.625M	KITAGAWA	2	
7	74575391	EMI Shield	P869518156	UC-300279-0.734M	KITAGAWA	1	
8	74418839	EMI Shield	P869518159	UC-300287-0.748M	KITAGAWA	1	
9	74418842	Terminal Parts	P864058125	250-Tabs Type-D	TOYO	1	
10	74577588	Pan Head Screw with Washer	P334200182	M3X8(Chromate P-3)		1	
11	74379098	Charging Mark	P360200003	JISB6015-80H		1	
12	74562006	Ground Mark	6800994	S500288		1	

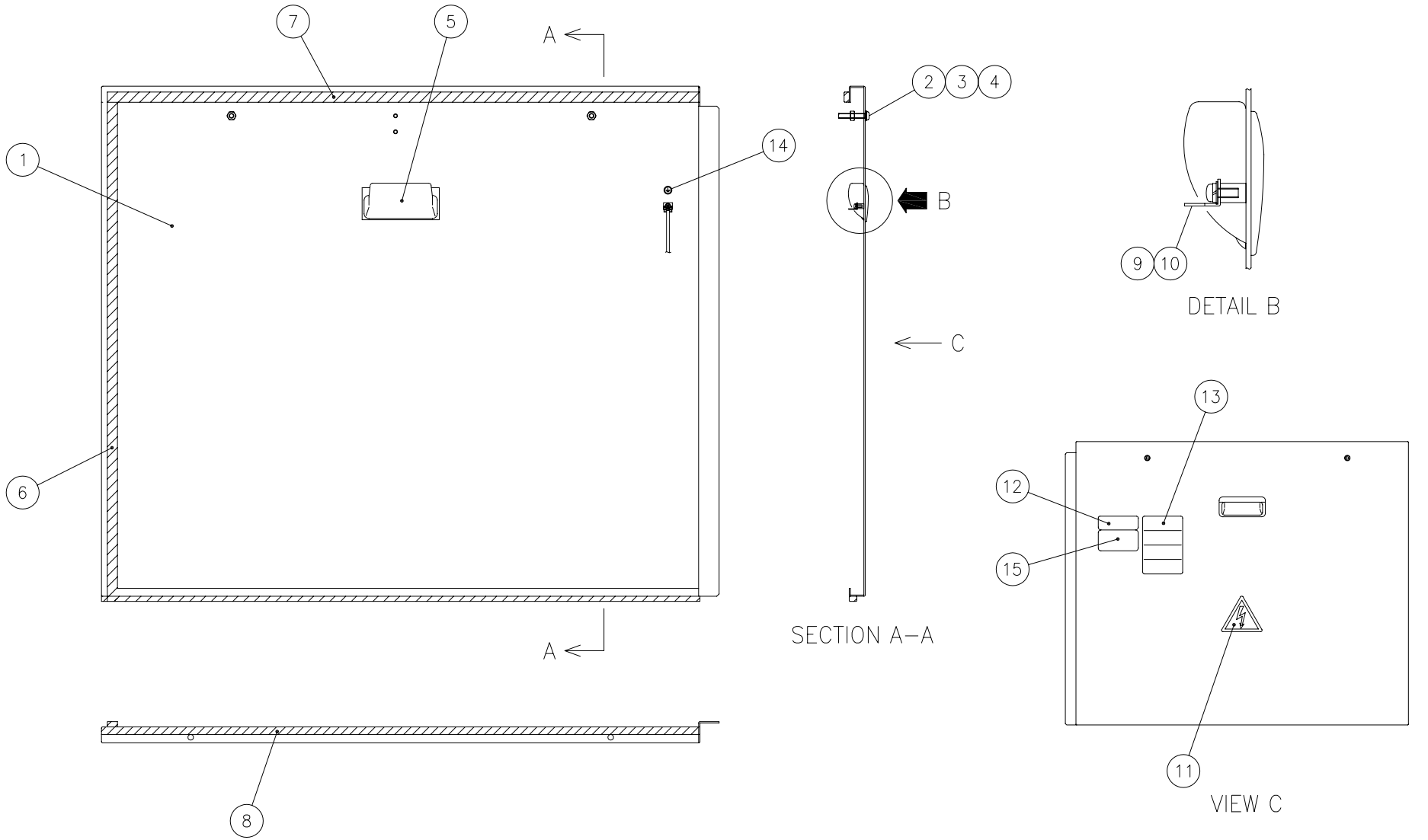
7
5
A
1
14
6
A
8
2
3
4
B
C
SECTION A–A
9
10
DETAIL B
13
12
15
11
VIEW C
6705917A

Control Device(12)

From Serial No.36102001 and after

Index	Code	Parts Name	Drawing No.	Type	Maker	Q'ty	Note
1	74418840	Lid R	6705117			1	
2	74419320	Knob	6705915			2	
3	36387468	Washer	P336000107	6(Polished Round)		2	Black Chromate
4	31182052	Nut	P332000102	M6(Type-2)		2	
5	74416094	Grip	P317152025	AP-197-1-3(Black)	TAKIGEN	1	
6	74575391	EMI Shield	P869518154	UC-300279-0.625M	KITAGAWA	1	
7	74575391	EMI Shield	P869518156	UC-300279-0.734M	KITAGAWA	1	
8	74418839	EMI Shield	P869518159	UC-300287-0.748M	KITAGAWA	1	
9	74418842	Terminal Parts	P864058125	250-Tabs Type-D	TOYO	1	
10	74569454	Pan Head Screw with Washer	P334200145	M3X8(Chromate P-4)		1	
11	74379098	Charging Mark	P360200003	JISB6015-80H		1	
12	74419321	Legend Plate (Battery) ENG	6708621			1	
13	74417195	Legend Plate 2 (Caution)	680012702A			1	
14	74562006	Ground Mark	6800994	S500288		1	
15	74419322	Legend Plate (Mannual)	6708622			1	

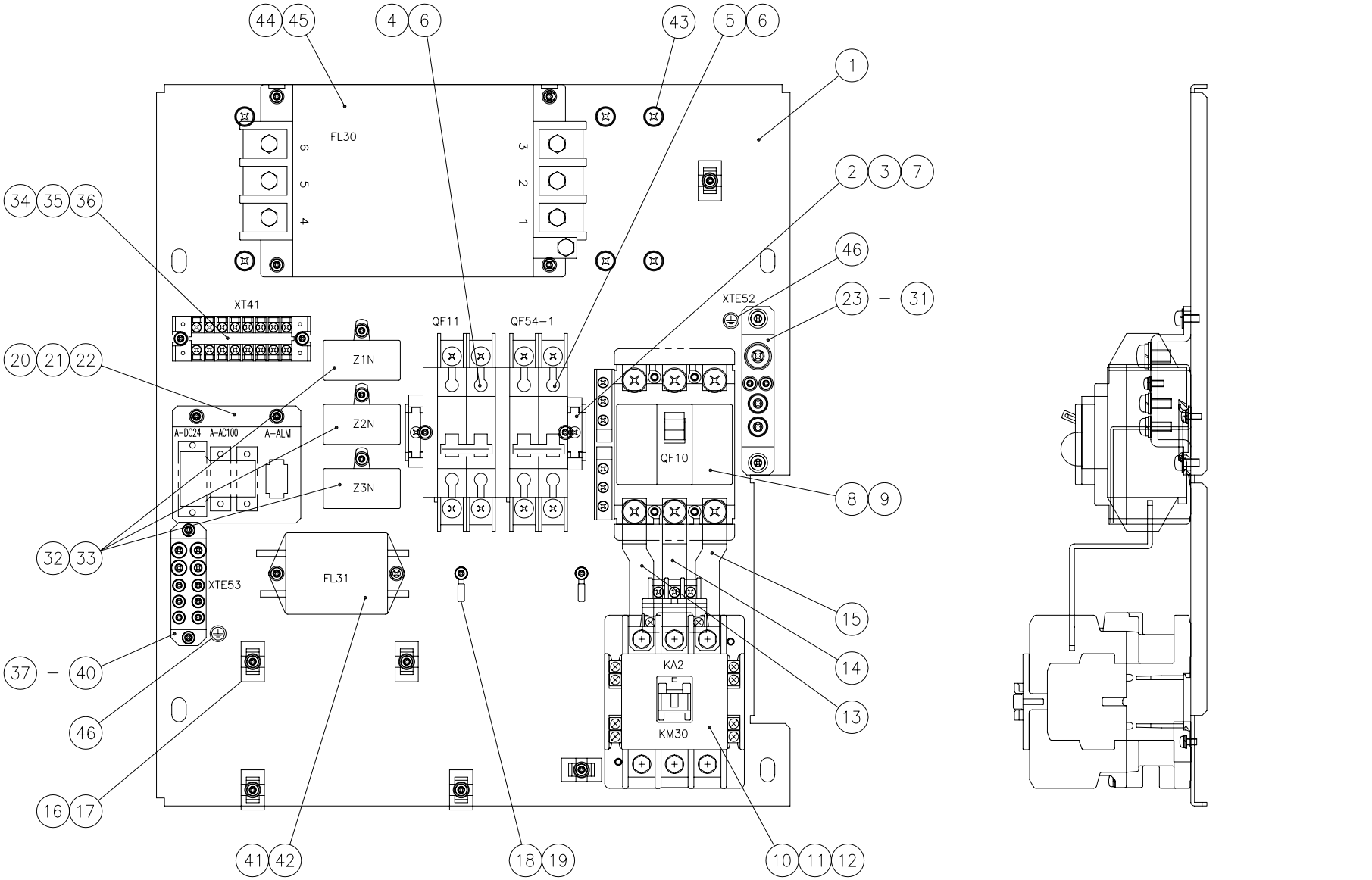
44 45
4 6
43
5 6
1
FL30
6 5 4
3 2 1
2 3 7
34 35 36
46
XT41
XTE52
23 – 31
QF11
QF54-1
20 21 22
Z1N
Z2N
Z3N
A-DC24 A-AC100 A-ALM
QF10
8 9
32 33
XTE53
FL31
15
14
13
37 – 40
KA2
KM30
46
16 17
41 42
18 19
10 11 12
6705918

Index	Code	Parts Name	Drawing No.	Type	Maker	Q'ty	Note
1	74418844	Chassis R (G)	6700649 A			1	
2	74578244	Terminal Base	P864032074	BAA1000(112.5)	IDEC	1	
3	74577525	Pan Head Screw with Washer	P334200183	M4X10(Chromate P-3)		2	
4	74418845	Low Voltage Breaker	P812128168	60161	SCHNEIDER	1	
5	74418846	Low Voltage Breaker	P812128169	60154	SCHNEIDER	1	
6	74419048	Accessory(Low Voltage Breaker)	P812198004	26925	SCHNEIDER	2	
7	74342638	Terminal Parts	P864052008	BNL6	IDEC	2	
8	74417647	Low Voltage Breaker	P812004117	EA103C/100W with Terminal Block	FUJI Electric	1	
9	74417650	Accessory(Low Voltage Breaker)	P812094037	BZ6TSH10C3	FUJI Electric	1	
10	74417655	Electro-Magnetic Contactor	P810004088	SC-N3/T-AC100V	FUJI Electric	1	
11	74417615	Accessory For Contactor	P810014053	SZ-CD4	FUJI Electric	1	
12	74417656	Pan Head Screw with Washer	P334200185	M4X16(Chromate P-3)		2	
13	74418847	Copper Bar L (AMP)	6705654			1	
14	74418848	Copper Bar C (AMP)	6705655			1	
15	74418849	Copper Bar R (AMP)	6705656			1	
16	31184309	Cable Band	P381058076	TC-142	KITAGAWA	6	
17	74577525	Pan Head Screw with Washer	P334200183	M4X10(Chromate P-3)		6	
18	74417594	Cable Band	P381058122	CS-7	SHINAGAWA	2	
19	74577525	Pan Head Screw with Washer	P334200183	M4X10(Chromate P-3)		2	

Index	Code	Parts Name	Drawing No.	Type	Maker	Q'ty	Note
20	74418850	CN Bracket (CE)	6705154			1	
21	74577525	Pan Head Screw with Washer	P334200183	M4X10(Chromate P-3)		2	
22	36541317	Push Rivet	P339308008	P3555B	SHINAGAWA	4	
23	74418851	Ground Bar (6)	6705664			1	
24	74417639	Pan Head Screw with Washer	P334200169	M5X12(Chromate P-3)		2	
25	74417671	Pan Head Screw	P334100132	M8X14(Nickel)		1	
26	74417525	Spring Washer	P336050042	8(Nickel)		1	
27	74417526	Washer	P336000103	8(Polished Round)-Nickel		1	
28	74417620	Pan Head Screw	P334100131	M6X12(Nickel)		2	
29	74417507	Spring Washer	P336050041	6(Nickel)		2	
30	74417641	Washer	P336000102	6(Polished Round)-Nickel		2	
31	31201136	Pan Head Screw with Washer	P334208002	M4X10(NickelP-4for Thin Board)	SANKO Industry	2	
32	74417678	Noise Filter	P840042013	3XYEB-105104	OKAYA	3	
33	74417979	Pan Head Screw with Washer	P334200205	M4X12(Chromate P-3)		3	
34	31201096	Block Terminal	P864004037	TSU-615-8P	KIMDEN	1	
35	74569455	Pan Head Screw with Washer	P334200116	M4X12(Chromate P-4)		2	
36	31201097	Terminal Parts	P864052020	BNJ26FW	IDEC	1	
37	74418596	Ground Bar	6803458 A			1	
38	31201049	Pan Head Screw with Washer	P334208003	M5X12(NickelP-4for Thin Board)	SANKO Industry	4	

Index	Code	Parts Name	Drawing No.	Type	Maker	Q'ty	Note
39	31201136	Pan Head Screw with Washer	P334208002	M4X10(NickelP-4for Thin Board)	SANKO Industry	6	
40	74570030	Pan Head Screw with Washer	P334200115	M4X10(Chromate P-4)		2	
41	31180698	Noise Filter	P840048008	ZAC2210-00U	TDK	1	
42	74577525	Pan Head Screw with Washer	P334200183	M4X10(Chromate P-3)		2	
43	74577579	Pan Head Screw with Washer	P334200190	M6X12(Chromate P-3)		6	
44	74417961	Noise Filter	P840042012	3SUP-HB50-ER-6	OKAYA	1	
45	74577525	Pan Head Screw with Washer	P334200183	M4X10(Chromate P-3)		4	
46	74562006	Ground Mark	6800994	S500288		2	

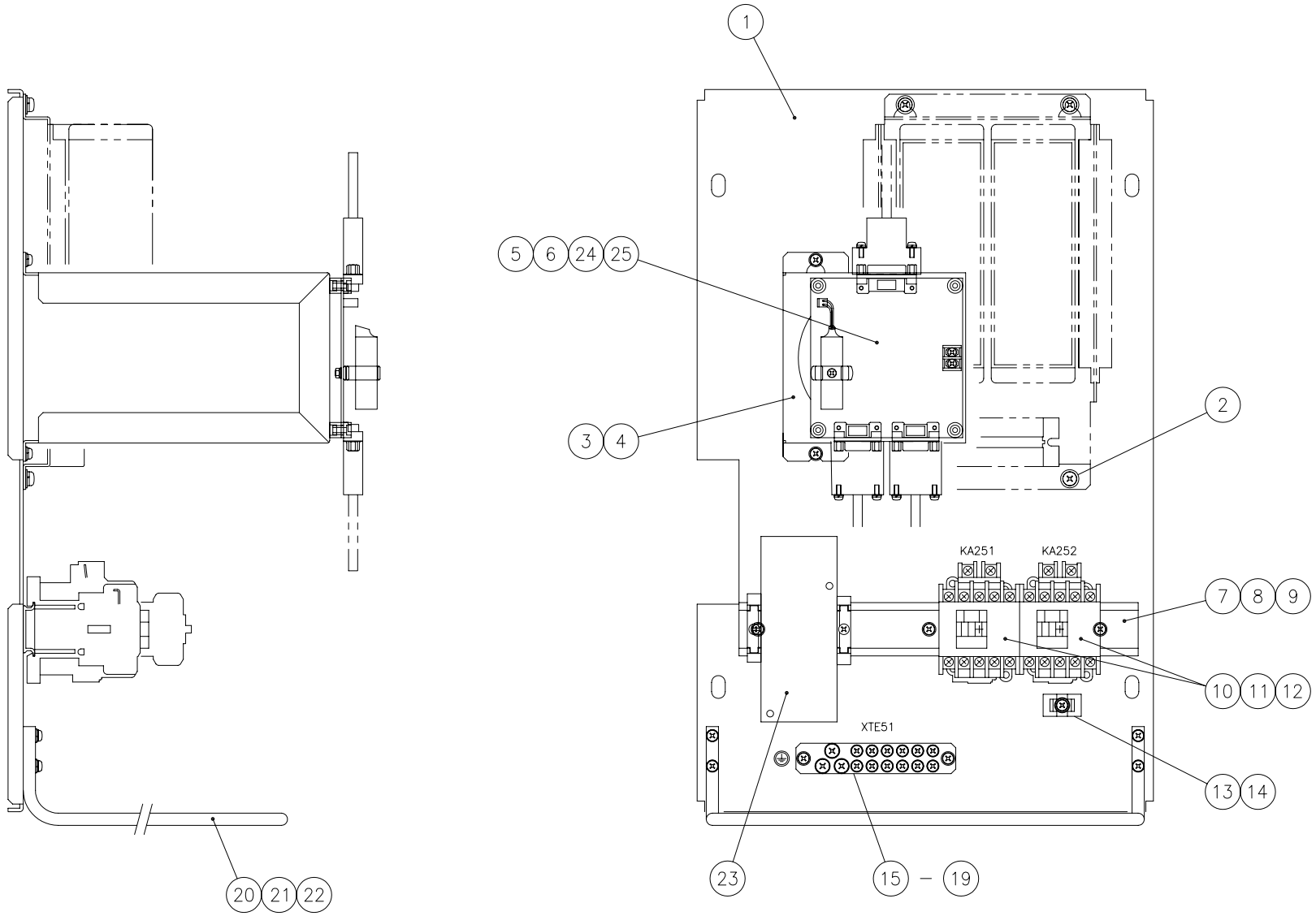
1
5
6
24
25
3
4
2
KA251
KA252
7
8
9
10
11
12
XTE51
13
14
23
15 – 19
20
21
22

6705919

Index	Code	Parts Name	Drawing No.	Type	Maker	Q'ty	Note
1	74418852	Chassis L	6701347 A			1	
2	74417639	Pan Head Screw with Washer	P334200169	M5X12(Chromate P-3)		4	
3	74418853	Encoder I/F Bracket	6701338 A			1	
4	74577525	Pan Head Screw with Washer	P334200183	M4X10(Chromate P-3)		2	
5	74417636	Pan Head Screw with Washer	P334200174	M3X16(Chromate P-4)		4	
6	74417670	Lithium Battery	P379818004	ER6V-C4	TOSHIBA	1	
7	74417664	Terminal Base	P864032147	BAA1000(262.5)	IDEC	1	
8	74577525	Pan Head Screw with Washer	P334200183	M4X10(Chromate P-3)		3	
9	74342638	Terminal Parts	P864052008	BNL6	IDEC	2	
10	74418854	Electro-Magnetic Contactor	P810004133	SH-5H/Z208-AC200V	FUJI Electric	2	
11	10579404	Cover	P810014036	SZ-T2	FUJI Electric	2	Accessory For Contactor
12	10421116	Spark Killer	P810184004	SZ-Z5	FUJI Electric	2	Accessory(Electro-Magnetic SW)
13	31184309	Cable Band	P381058076	TC-142	KITAGAWA	1	
14	74577525	Pan Head Screw with Washer	P334200183	M4X10(Chromate P-3)		1	
15	74418622	Ground Bar (5)	6701354			1	
16	74577525	Pan Head Screw with Washer	P334200183	M4X10(Chromate P-3)		2	
17	31201049	Pan Head Screw with Washer	P334208003	M5X12(NickelP-4for Thin Board)	SANKO Industry	3	
18	31201136	Pan Head Screw with Washer	P334208002	M4X10(NickelP-4for Thin Board)	SANKO Industry	12	
19	74562006	Ground Mark	6800994	S500288		1	

Index	Code	Parts Name	Drawing No.	Type	Maker	Q'ty	Note
20	74418855	Harness Support A (AMP)	6705624			1	
21	74417689	Pan Head Screw with Washer	P334200176	M4X16(Chromate P-4)		4	
22	74562972	Ferrite Core	P840038001	ZCAT3035-1330	TDK	3	Accessory
23	74417730	Program Controller Module	P767478039	A02B-0259-C180	FANUC	1	
24	74418856	Encoder Cable	6707434			1	
25	74417731	Encoder I/F Board	6707428	NPC0215	NISSO	1	

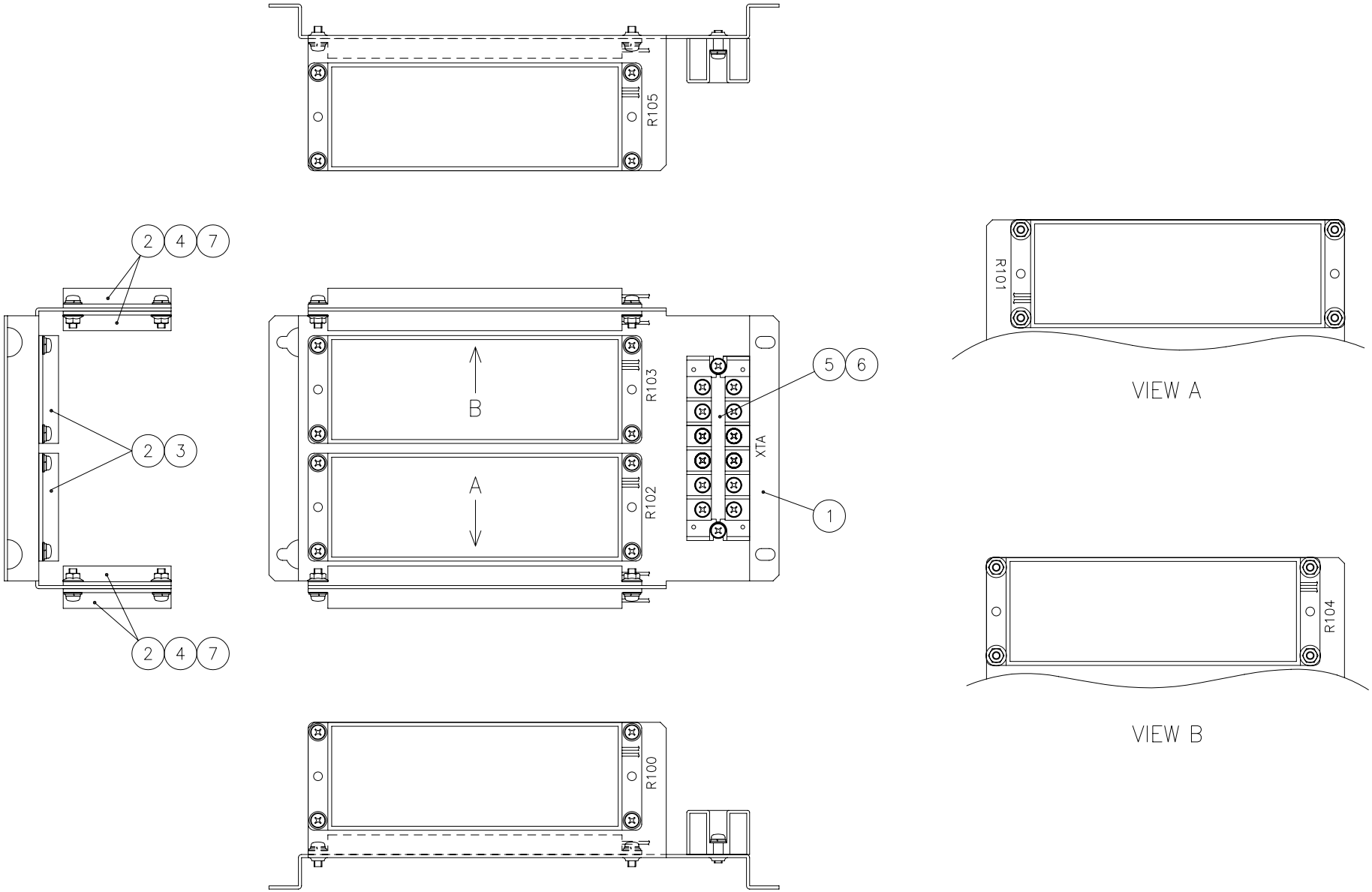
R105
2 4 7
2 3
2 4 7
B
A
R103
R102
XTA
5 6
1
R100
R101
VIEW A
R104
VIEW B
6705739A

Unit No. 73

Control Device(15) From Serial No.36102001 and after

Index	Code	Parts Name	Drawing No.	Type	Maker	Q'ty	Note
1	74417732	RU Base (EMF)	6705219 A			1	
2	74418857	Resistor	6705731			1	
3	74577525	Pan Head Screw with Washer	P334200183	M4X10(Chromate P-3)		8	
4	74417656	Pan Head Screw with Washer	P334200185	M4X16(Chromate P-3)		8	
5	74417734	Block Terminal	P864004040	TSU-625C-6P	KIMDEN	1	
6	74569455	Pan Head Screw with Washer	P334200116	M4X12(Chromate P-4)		2	
7	31201071	Nut	P332238001	M4		8	

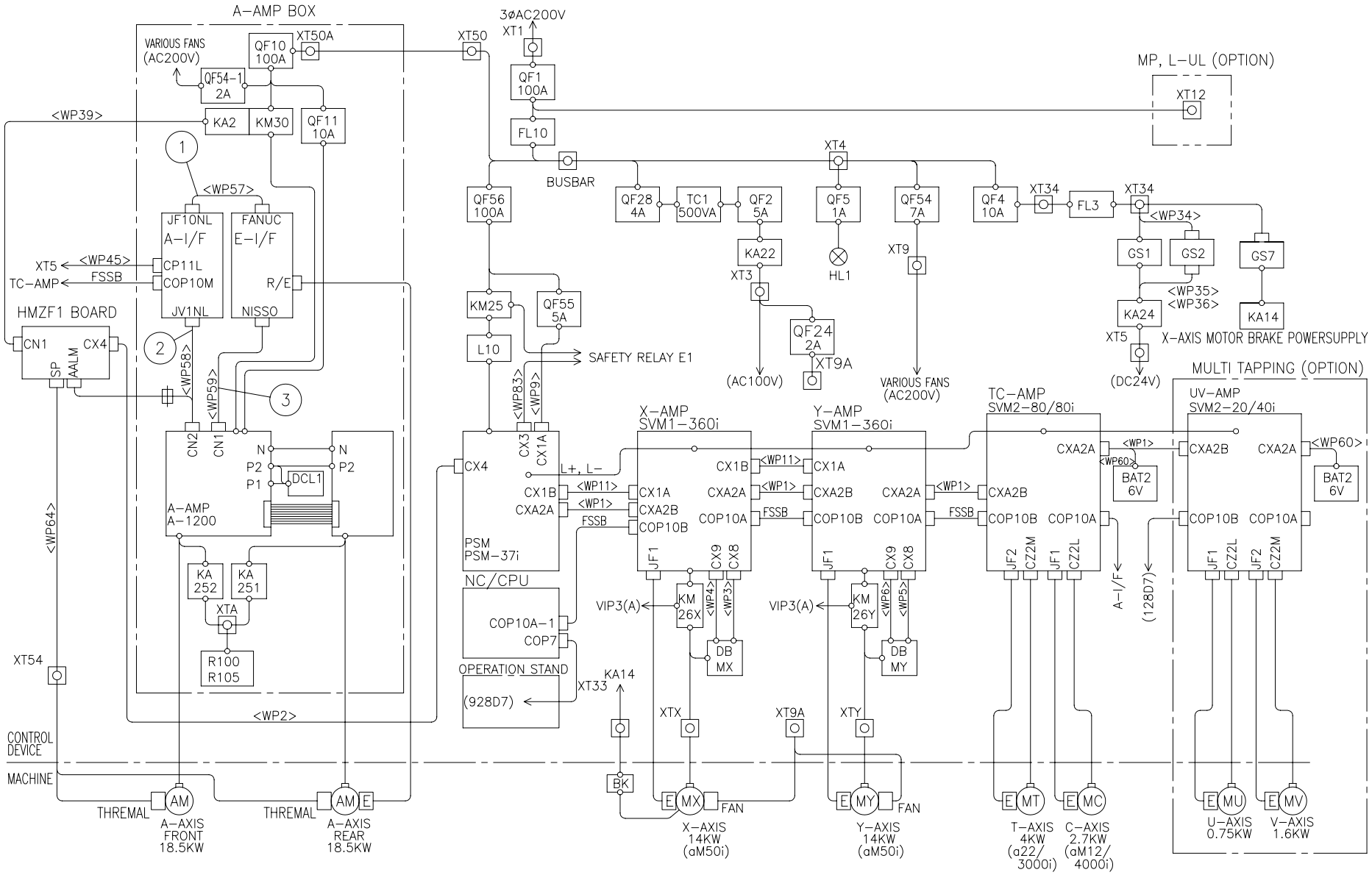
A-AMP BOX
VARIOUS FANS (AC200V)
QF10 100A
XT50A
XT50
QF54-1 2A
KA2
KM30
QF11 10A
<WP39>
<WP57>
JF10NL
A-I/F
FANUC
E-I/F
XT5
<WP45>
CP11L
FSSB
COP10M
TC-AMP
R/E
JV1NL
NISSO
HMZF1 BOARD
CN1
CX4
SP
AALM
<WP58>
<WP59>
CN2
CN1
N
P2
P1
DCL1
A-AMP A-1200
KA 252
KA 251
XTA
R100 R105
XT54
<WP64>
<WP2>
CONTROL DEVICE
MACHINE
THREMAL
AM
A-AXIS FRONT 18.5KW
THREMAL
AM
E
A-AXIS REAR 18.5KW
3ØAC200V
XT1
QF1 100A
FL10
BUSBAR
QF56 100A
KM25
L10
QF55 5A
SAFETY RELAY E1
<WP83>
<WP9>
CX3
CX1A
CX4
PSM PSM-37i
L+, L-
NC/CPU
COP10A-1
COP7
OPERATION STAND
(928D7)
XT33
KA14
BK
MP, L-UL (OPTION)
XT12
XT4
QF28 4A
TC1 500VA
QF2 5A
QF5 1A
QF54 7A
QF4 10A
XT34
FL3
<WP34>
KA22
XT3
HL1
XT9
QF24 2A
XT9A
(AC100V)
VARIOUS FANS (AC200V)
GS1
GS2
GS7
<WP35>
<WP36>
KA24
KA14
XT5
X-AXIS MOTOR BRAKE POWERSUPPLY
(DC24V)
MULTI TAPPING (OPTION)
X-AMP SVM1-360i
CX1B
CXA2A
<WP11>
<WP1>
FSSB
CX1A
CXA2B
COP10B
COP10A
JF1
CX9
CX8
VIP3(A)
KM 26X
<WP4>
<WP3>
DB MX
XTX
XT9A
Y-AMP SVM1-360i
KM 26Y
<WP6>
<WP5>
DB MY
XTY
TC-AMP SVM2-80/80i
JF2
CZ2M
CZ2L
A-I/F
(128D7)
BAT2 6V
<WP60>
UV-AMP SVM2-20/40i
FAN
X-AXIS 14KW (aM50i)
Y-AXIS 14KW (aM50i)
T-AXIS 4KW (a22/ 3000i)
C-AXIS 2.7KW (aM12/ 4000i)
U-AXIS 0.75KW
V-AXIS 1.6KW
670779127

Index	Code	Parts Name	Drawing No.	Type	Maker	Q'ty	Note
1	74418858	WP57	670281757B			1	
2	74418859	WP58	670281758A			1	
3	74418860	WP59	670281759A			1	
4	74419323	WP70	670536070A			1	List Only
5	74419324	WP71	670536071A			1	List Only
6	74418863	WP72	670281772			1	List Only
7	74418864	WP73	670281773A			1	List Only
8	74418865	WP74	670281774			1	List Only
9	74419325	WP75	670536075A			1	List Only
10	74419326	WP76	670536076B			1	List Only
11	74418868	WP77	670281777			1	List Only
12	74418869	WP78	670281778			1	List Only
13	74419327	Amplifier Box Cable 1	670838301A			1	List Only
14	74419328	Amplifier Box Cable 2	670838302A			1	List Only
15	74419329	Amplifier Box Cable 3	670838303A			1	List Only
16	74419330	Amplifier Box Power Cable	670838304A			1	List Only

Control Device(17)-1/2 <Cable Between Operation Panel>

From Serial No.36102001 and after

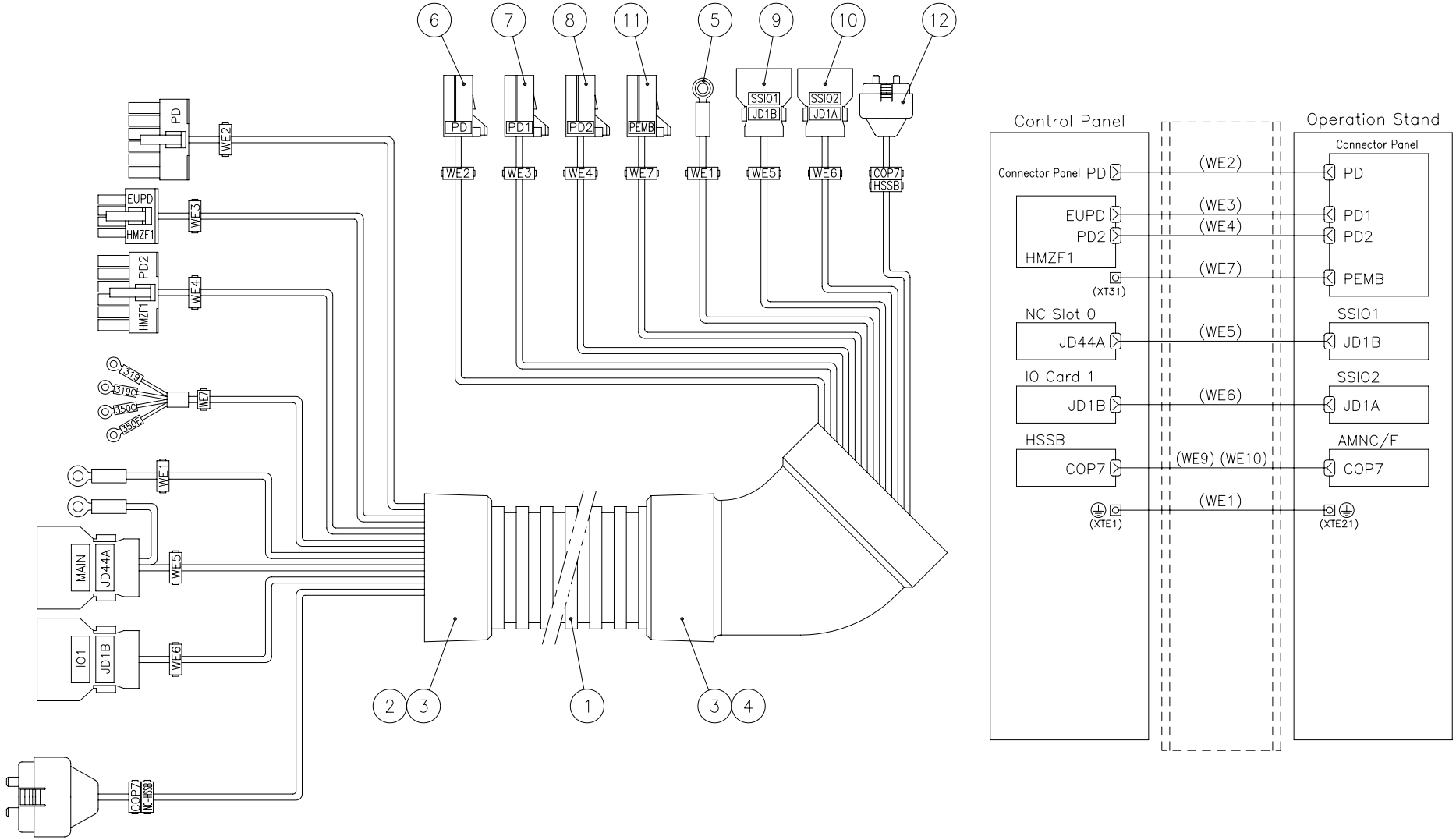

6701876
6701877

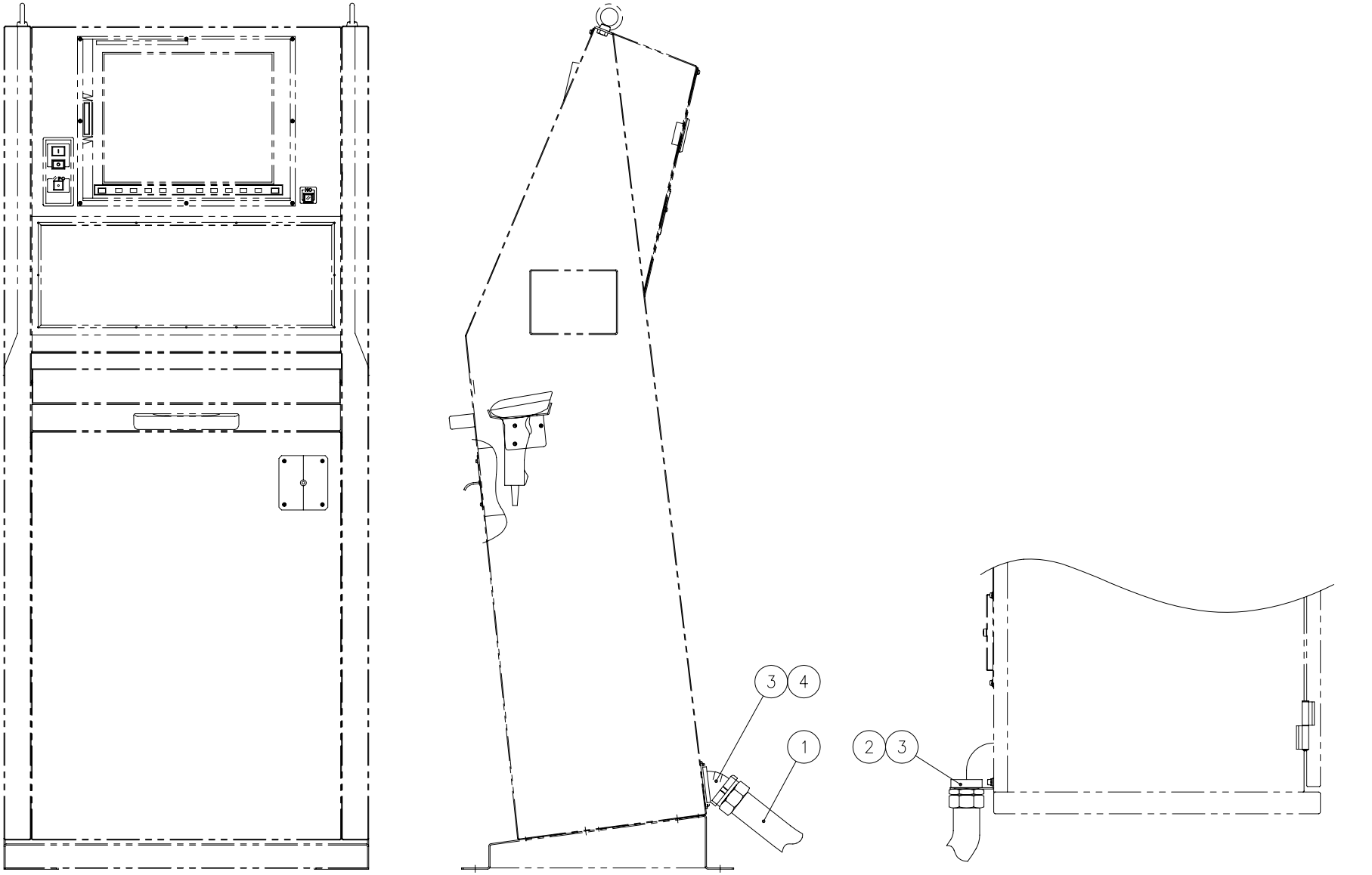
3
4
1
2
3
6705385#3A

Index	Code	Parts Name	Drawing No.	Type	Maker	Q'ty	Note
1	74417777	Flexible Conduit	P869013025	SR-12-7.5M	NIPOLEX	1	STD
1	74417778	Flexible Conduit	P869013026	SR-12-12.5M	NIPOLEX	1	+5m
2	36540135	Accessory For Conduit	P866008046	RBC-112	NIPOLEX	1	
3	74417779	Accessory For Conduit	P866088037	ZVO-42	MIRAI Industries	2	
4	74417780	Accessory For Conduit	P866008060	RBC-212	NIPOLEX	1	
5	74419428	Cable (WE1)	670513701			1	STD
5	74419431	Cable (WE1)	670513704			1	+5m
6	74416359	Cable (WE2)	670526007			1	STD
6	74417781	Cable (WE2)	670526008			1	+5m
7	74417782	Cable (WE3)	670526012			1	STD
7	74417783	Cable (WE3)	670526013			1	+5m
8	74575133	Cable (WE4)	670312821			1	STD
8	74575134	Cable (WE4)	670617226			1	+5m
9	74419429	Cable (WE5)	670513702			1	STD
9	74419432	Cable (WE5)	670513705			1	+5m
10	74417784	Cable (WE6)	670246033A			1	STD
10	74417785	Cable (WE6)	670617228A			1	+5m
11	74419430	Cable (WE7)	670513703			1	STD
11	74419433	Cable (WE7)	670513706			1	+5m

Index	Code	Parts Name	Drawing No.	Type	Maker	Q'ty	Note
12	74417786	Cable (WE9)	670526014			1	STD
12	74417787	Cable (WE10)	670526015			1	+5m

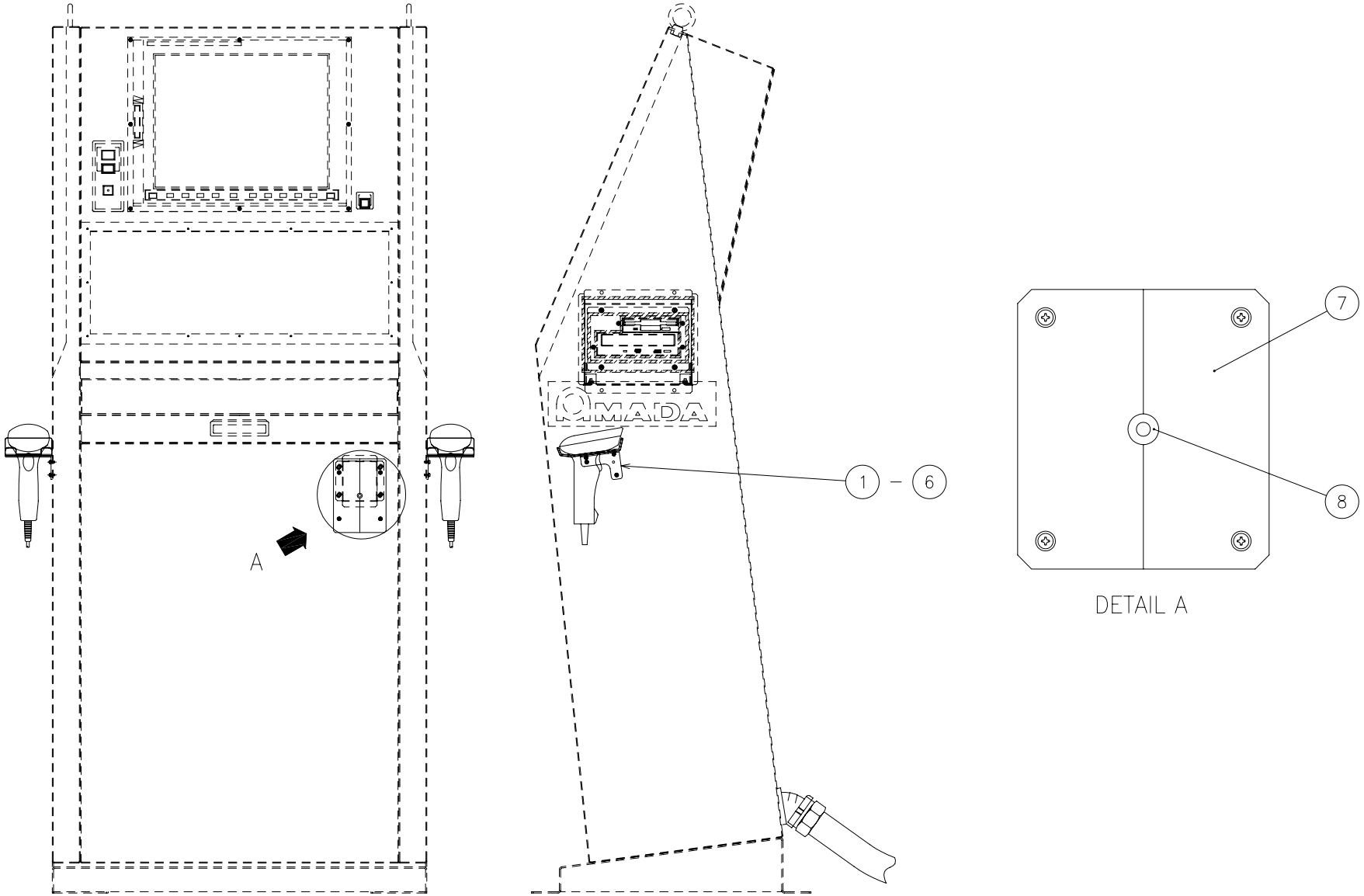

Operation Stand

6706219
(6702857B)

Control Device(18) From Serial No.36102001 and after

Index	Code	Parts Name	Drawing No.	Type	Maker	Q'ty	Note
1	74419331	BR Holder UD (1)	6705177 B			1	
2	74419332	BR Holder UD (2)	6705178 D			1	
3	74419142	Flat Head Screw	P334110104	M3X10(Black Chromate)		2	
4	36384455	Spring Washer	P336050002	3		2	
5	79316251	Washer	P336000057	3(Polished Round)		2	
6	74571922	Domed Cap Nut	P332150016	M3		2	
7	74419143	Plate (3610)	6700345			2	
8	74417791	Bush For Cable	P229112050	C-30-NG-79-A-1	TAKIGEN	1	

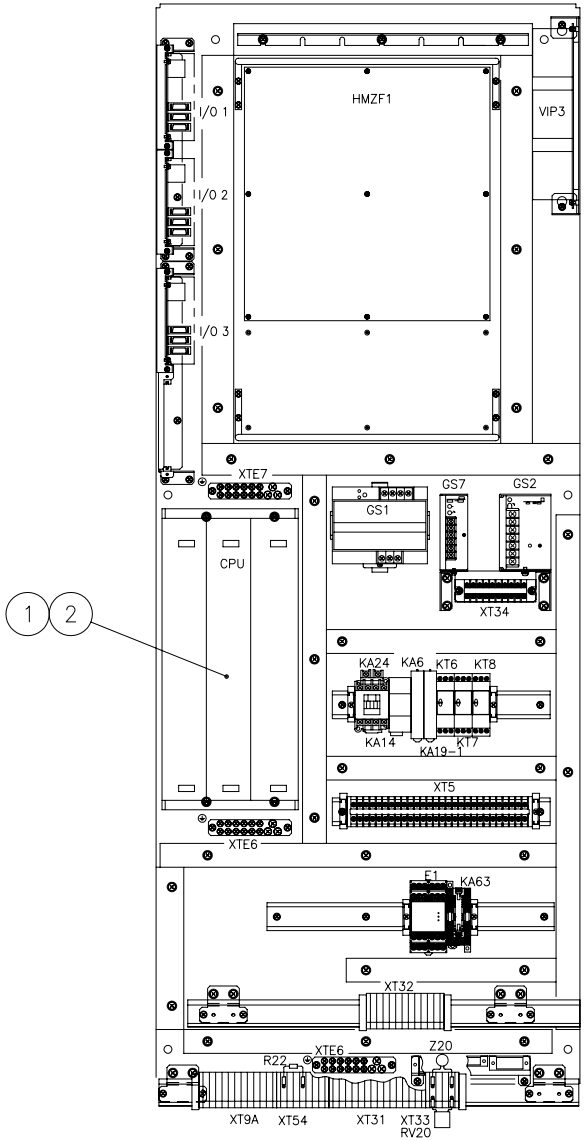

Control Panel (Chassis R)

6702304
6707944
(6701278)

Index	Code	Parts Name	Drawing No.	Type	Maker	Q'ty	Note
1	74416382	Serial Communication Board A1	QZZ022571	A02B-0281-J032	FANUC	1	
2	74418874	WP137	670285337			1	

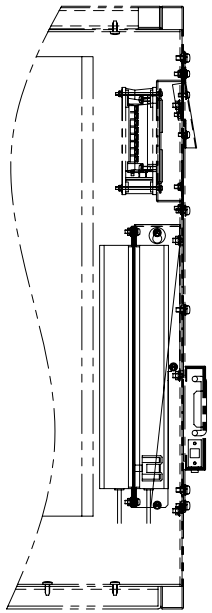

AMP BOX
(CHASSIS C)

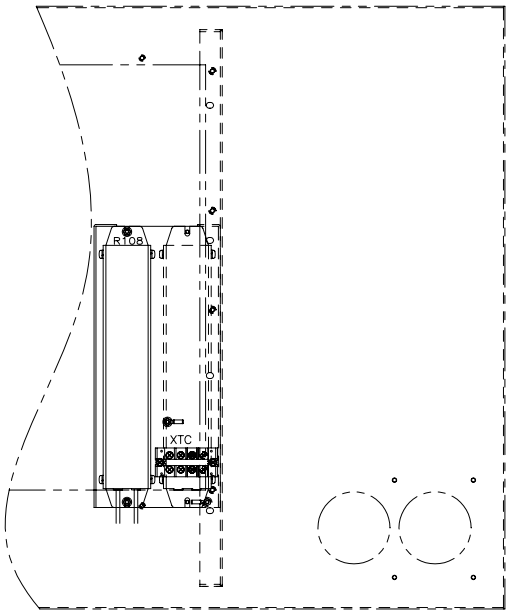

AMP BOX
(MAIN MACHINE ASS'Y)

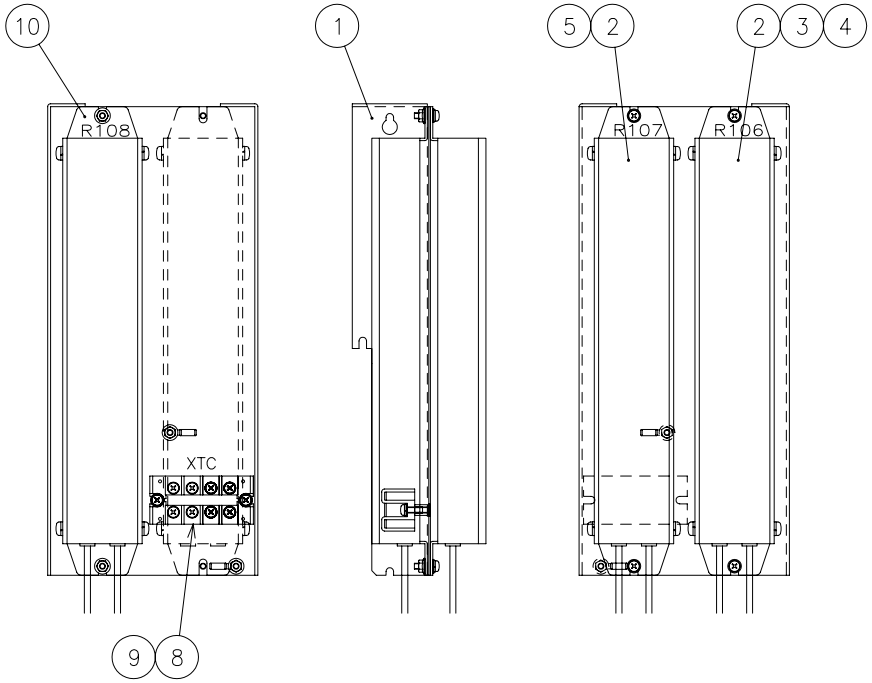

6702263
6705743

Control Device(20) From Serial No.36102001 and after

Index	Code	Parts Name	Drawing No.	Type	Maker	Q'ty	Note
1	74419333	Electric Discharge Bracket	6707971 A			1	
2	74419334	Resistor	6708001 C			1	
3	74417733	Pan Head Screw with Washer	P334200184	M4X14(Chromate P-3)		2	
4	74416219	Nut	P332238004	M4(Chromate)	SANKO Industry	2	
5	74577525	Pan Head Screw with Washer	P334200183	M4X10(Chromate P-3)		2	
6	74417594	Cable Band	P381058122	CS-7	SHINAGAWA	2	List Only
7	74416219	Nut	P332238004	M4(Chromate)	SANKO Industry	2	List Only
8	74419335	Block Terminal	P864004038	TSU-625C-4P	KIMDEN	1	
9	74569455	Pan Head Screw with Washer	P334200116	M4X12(Chromate P-4)		2	
10	74419336	Wire	6705371			1	

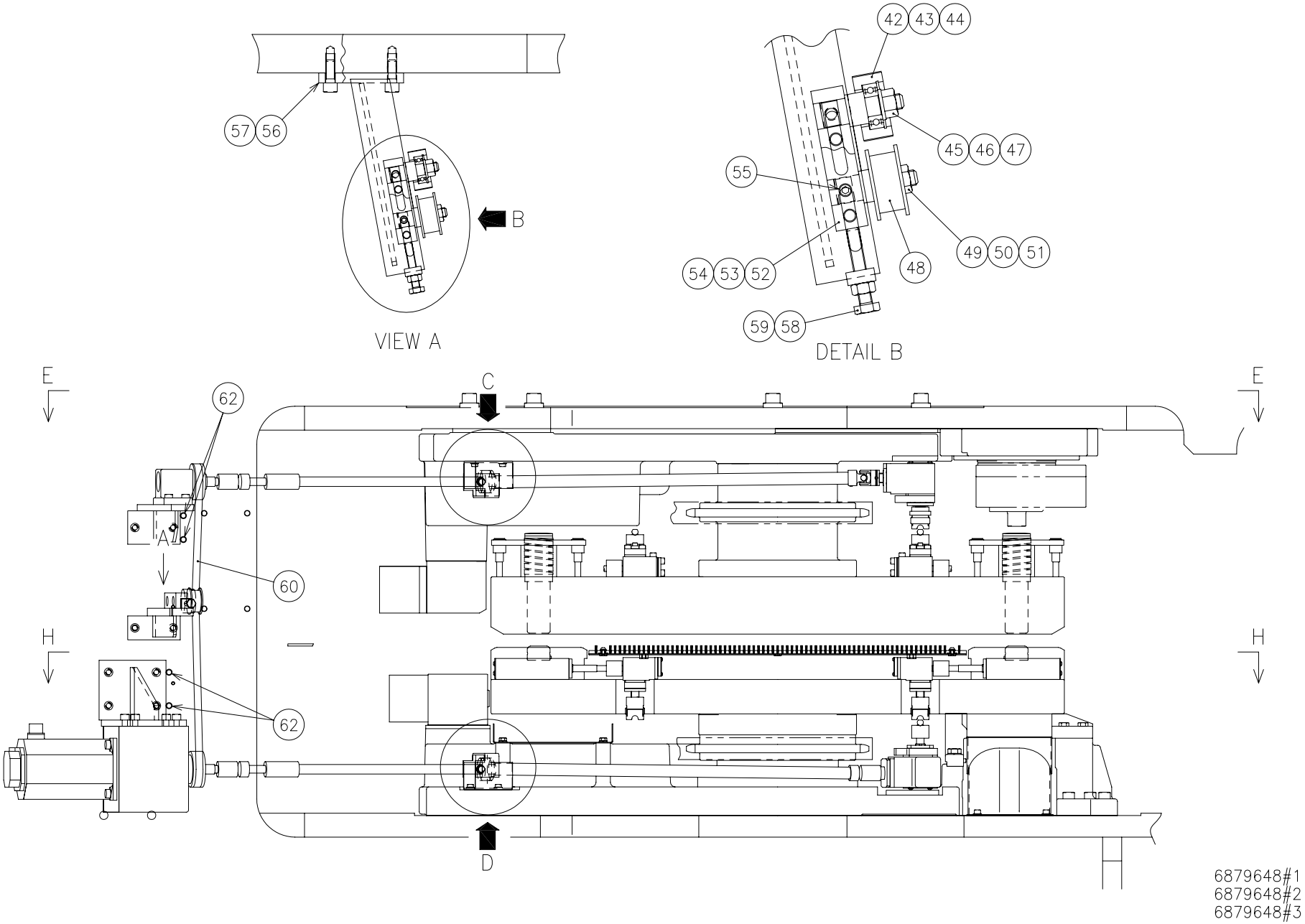
57
56
B
VIEW A
42
43
44
45
46
47
55
49
50
51
54
53
52
48
59
58
DETAIL B
E
C
62
A
60
H
62
D
6879648#1
6879648#2
6879648#3

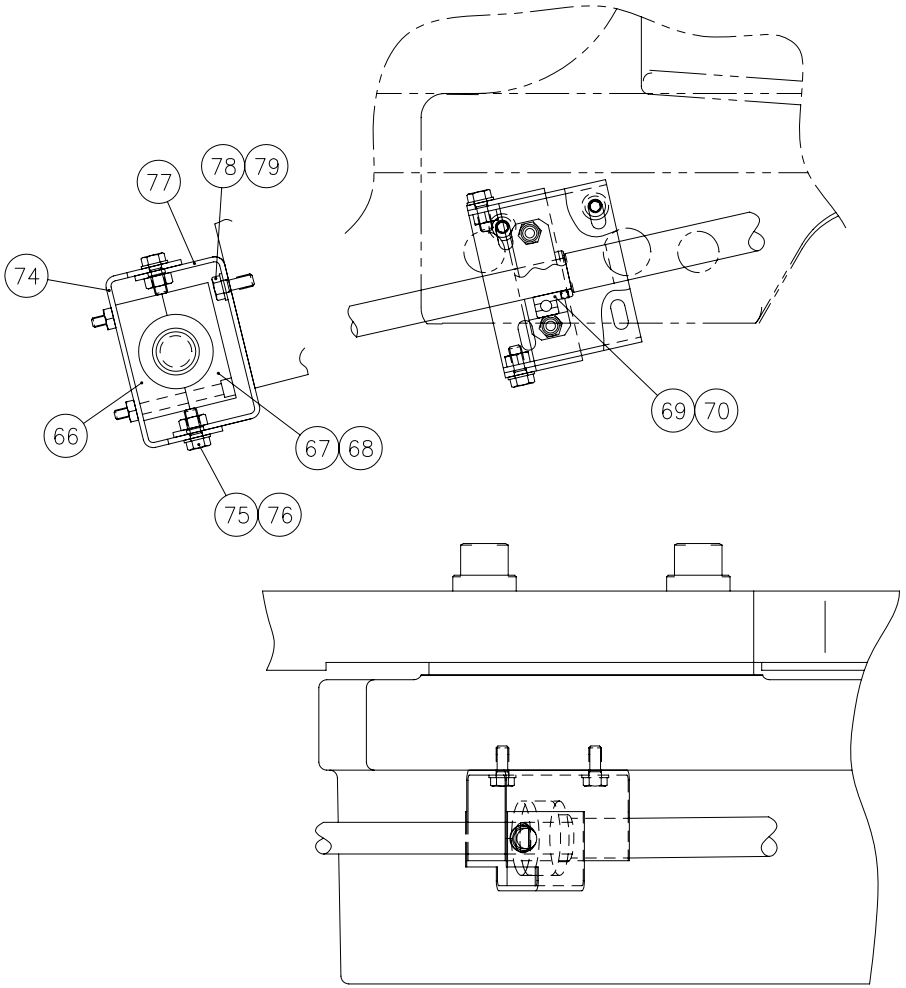

DETAIL C

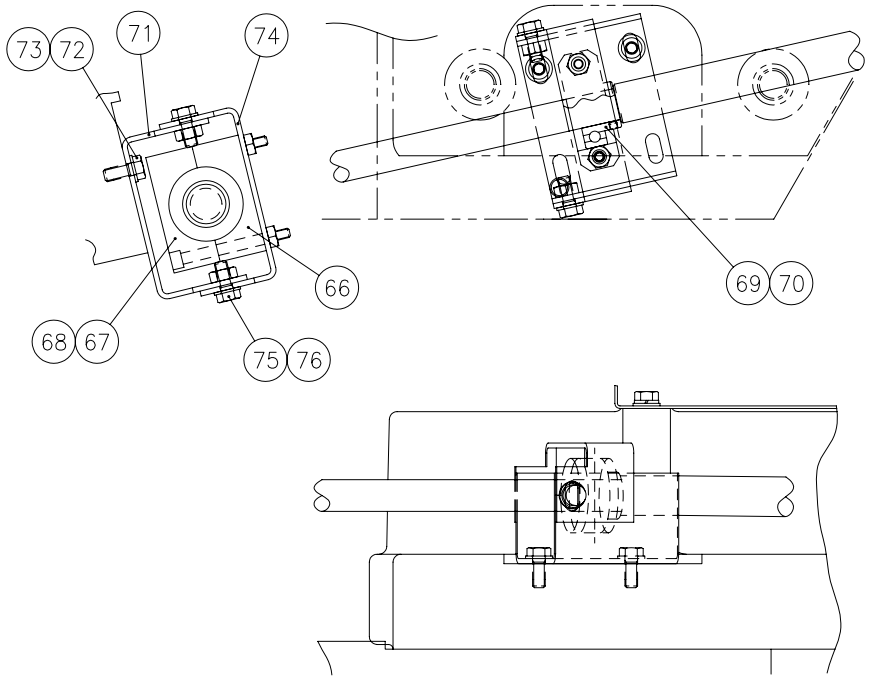

DETAIL D

6879648#1
6879648#2
6879648#3

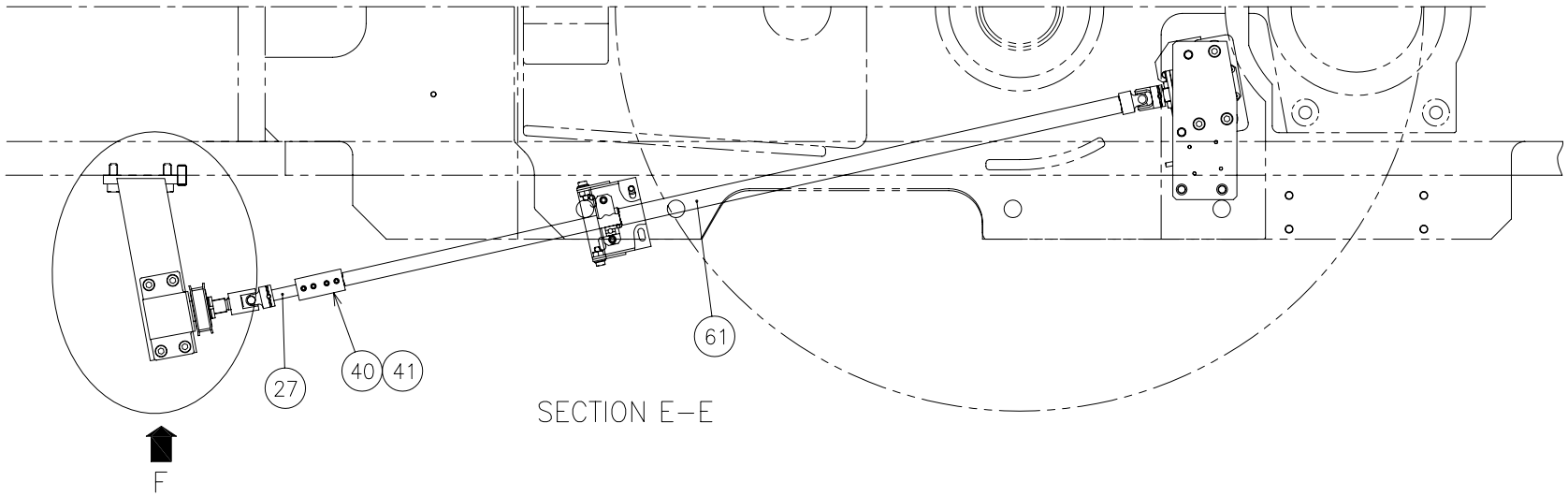

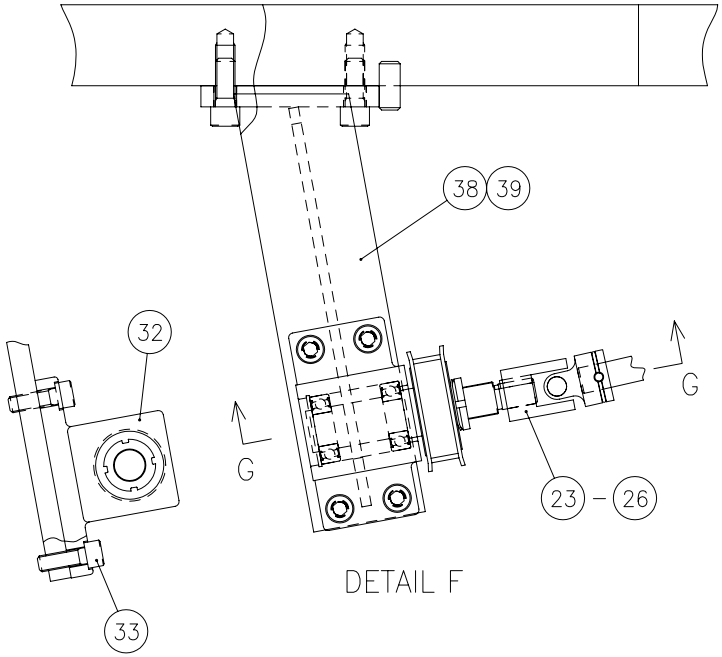

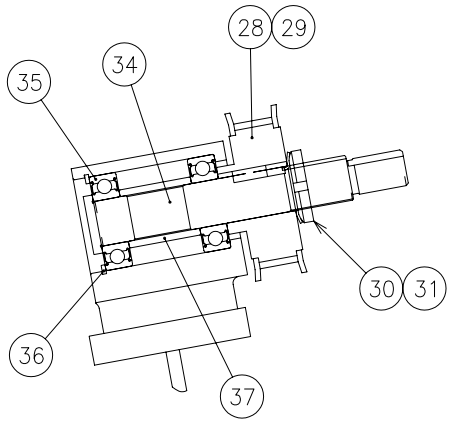

6879648#1
6879648#2
6879648#3

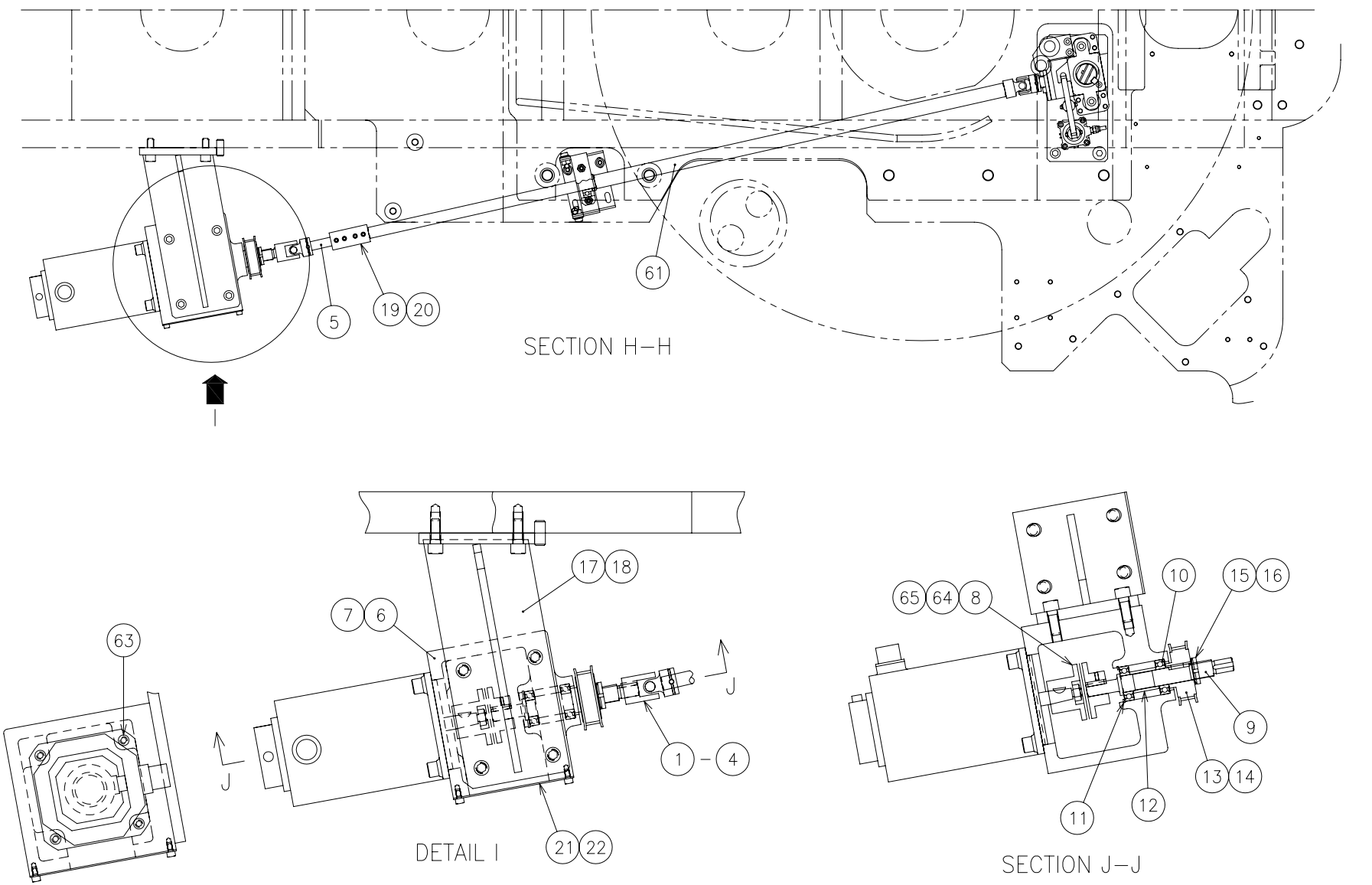

6879648#1
6879648#2
6879648#3

Unit No. 79

AI(1) From Serial No.36102001 and after

Index	Code	Parts Name	Drawing No.	Type	Maker	Q'ty	Note
1	74379564	Universal Joint	7830034		KYOWA	1	
2	74379608	Parallel Pin	P337020036	A-6X30		1	
3	74571414	Parallel Key (5X5X16)	6811101 A			1	
4	36147504	Socket Set Screw	P330550024	M6X6(Flat-end)		2	
5	74382604	Connecting Shaft	6501894 A			1	
6	74570092	Motor Bracket	6820200			1	(for F-Motor)
7	36367655	Hex Soc Cap Screw	P330250005	M12X30		4	
8	74575621	Parallel Key (5X5X20)	6811102 A			1	
9	74383630	Driving Shaft	6575813			1	
10	86244492	Deep Groove Ball Bearing	P400010753	6004ZZ	NSK(equality)	2	
11	45253522	Locating Snap Ring	P406108014	RTW-42	OCHIAI	1	
12	74722450	Collar	6575804			1	
13	74566020	Pulley	7830661	26S8M0150BF	Bando Chemical	1	
14	74575623	Parallel Key (5X5X15)	6811100 A			1	
15	75414510	Lock Nut	P406030003	AN-04		1	
16	75414511	Lock Washer	P406040003	AW-04		1	
17	74418875	Motor Base	6875517			1	
18	36367655	Hex Soc Cap Screw	P330250005	M12X30		4	
19	74379556	Connecting Block	6501831			1	

Index	Code	Parts Name	Drawing No.	Type	Maker	Q'ty	Note
20	74722741	Socket Set Screw	P330603010	M8X8(Knurled cup-end)	SPS/UNBRAKO	8	
21	74570093	Cover	6813159			1	
22	31183033	Hex Soc Cap Screw	P330220003	M6X10		4	
23	74379564	Universal Joint	7830034		KYOWA	1	
24	74379608	Parallel Pin	P337020036	A-6X30		1	
25	74571414	Parallel Key (5X5X16)	6811101 A			1	
26	36147504	Socket Set Screw	P330550024	M6X6(Flat-end)		2	
27	74382604	Connecting Shaft	6501894 A			1	
28	74566020	Pulley	7830661	26S8M0150BF	Bando Chemical	1	
29	74575623	Parallel Key (5X5X15)	6811100 A			1	
30	75414510	Lock Nut	P406030003	AN-04		1	
31	75414511	Lock Washer	P406040003	AW-04		1	
32	74566023	Bearing Holder	6575806 A			1	
33	86612727	Hex Soc Cap Screw	P330240008	M10X30		4	
34	74383631	Belt Shaft (Lower)	6575814			1	
35	86244492	Deep Groove Ball Bearing	P400010753	6004ZZ	NSK(equality)	2	
36	45253522	Locating Snap Ring	P406108014	RTW-42	OCHIAI	1	
37	74722450	Collar	6575804			1	
38	74418876	Driven Pulley Bracket	6875518			1	

Index	Code	Parts Name	Drawing No.	Type	Maker	Q'ty	Note
39	36367655	Hex Soc Cap Screw	P330250005	M12X30		4	
40	74379556	Connecting Block	6501831			1	
41	74722741	Socket Set Screw	P330603010	M8X8(Knurled cup-end)	SPS/UNBRAKO	8	
42	74382625	Idler Pulley	6575816	20S8M0150A		1	
43	74575625	Deep Groove Ball Bearing	P400010705	6202ZZ	NSK(equality)	1	
44	74379580	Locating Snap Ring	P406108011	RTW-35	OCHIAI	1	
45	31183535	Nut	P332000007	M12		1	
46	86613931	Washer	P336000008	12(Regular Round)		1	
47	74382623	Idler Pin	6575812			1	
48	74384526	Idler	P409238012	FIP2045	IMAO Mfg	1	
49	31183535	Nut	P332000007	M12		1	
50	86613931	Washer	P336000008	12(Regular Round)		1	
51	74382623	Idler Pin	6575812			1	
52	74570096	Idler Base	6813162			1	
53	86611612	Hex Soc Cap Screw	P330240009	M10X35		2	
54	86611626	Washer	P336000007	10(Regular Round)		2	
55	79323534	Socket Set Screw	P330590035	M10X10(Cup-end)		2	
56	74418877	Idler Bracket	6875519			1	
57	36367655	Hex Soc Cap Screw	P330250005	M12X30		2	

Index	Code	Parts Name	Drawing No.	Type	Maker	Q'ty	Note
58	79316342	Bolt	P330040015	M10X60(All-thread)		1	
59	10427991	Nut	P332000006	M10		1	
60	74387572	Synchronous Belt	P225023030	150S8M1440	Bando Chemical	1	
61	74571398	Center Shaft (L)	6821352			2	
62	74385229	Parallel Pin	P337020068	A-13X30		4	
63	79568702	Hex Soc Cap Screw	P330230008	M8X30		4	
64	74705459	Socket Set Screw	P330550011	M4X10(Flat-end)		4	
65	74722573	Coupling	7830302	SFS-06S-T069CA	Miki Pulley	1	
66	74382616	Bearing Support (A)	6502924			2	
67	74382617	Bearing Support (B)	6502925 A			2	
68	36334227	Hex Soc Cap Screw	P330220020	M6X70		4	
69	74571405	Bearing Unit	P405020535	ASS204N	NSK(equality)	2	
70	10561620	Socket Set Screw	P330590012	M5X8(Cup-end)		4	
71	74571406	Shaft Support Bracket (1)	6821356 A			1	
72	36176605	Bolt	P330030006	M8X20		2	
73	79567109	Washer	P336000006	8(Regular Round)		2	
74	74571407	Shaft Support Bracket (2)	6821357 A			2	
75	36176605	Bolt	P330030006	M8X20		4	
76	79567109	Washer	P336000006	8(Regular Round)		4	

Unit No. 79

AI(1) From Serial No.36102001 and after

Index	Code	Parts Name	Drawing No.	Type	Maker	Q'ty	Note
77	74571409	Shaft Support Bracket (1)	6811171			1	
78	36176605	Bolt	P330030006	M8X20		2	
79	79567109	Washer	P336000006	8(Regular Round)		2	

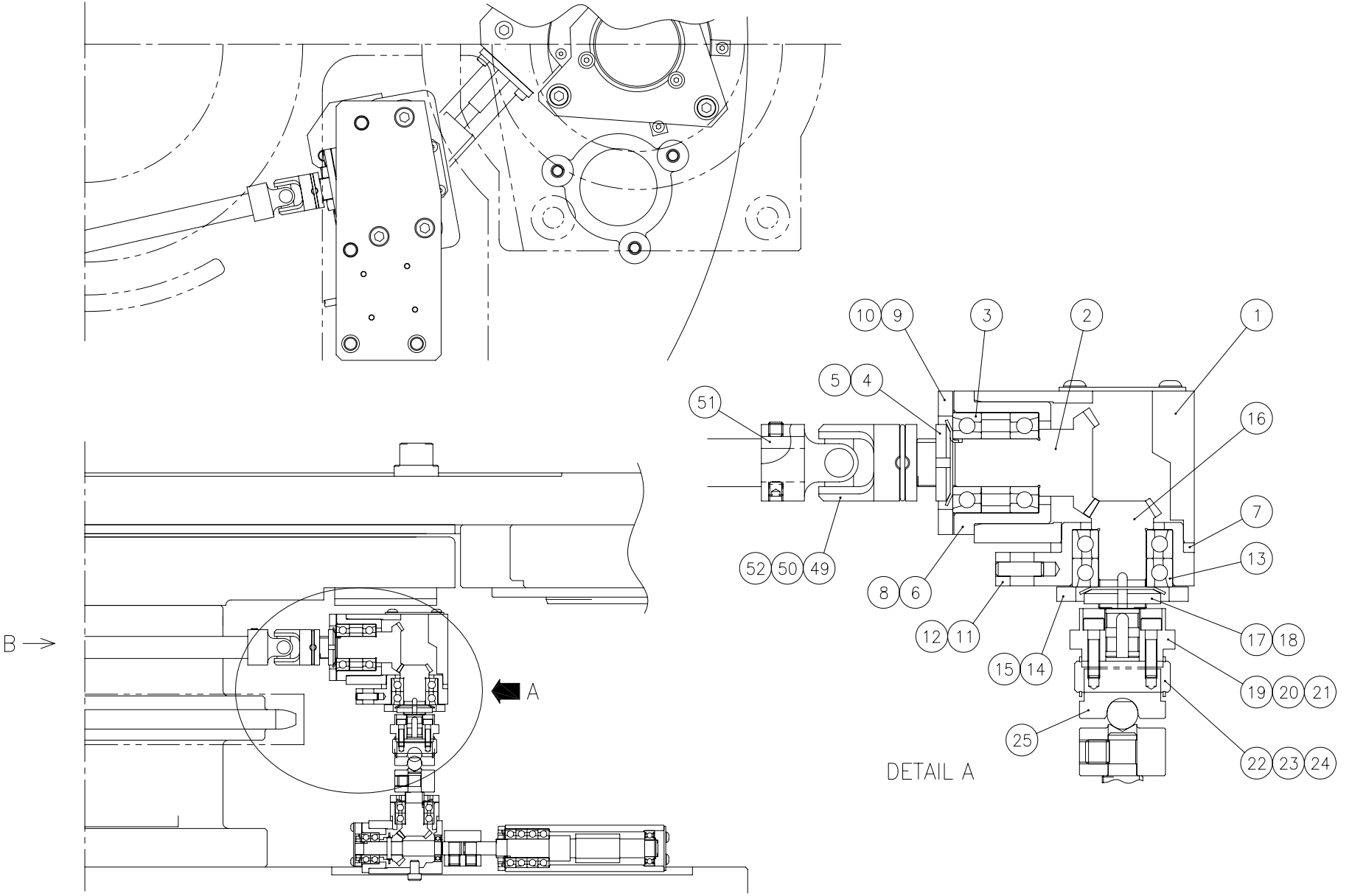
B
A
DETAIL A
1
2
3
4
5
6
7
8
9
10
11
12
13
14
15
16
17
18
19
20
21
22
23
24
25
49
50
51
52
6877173

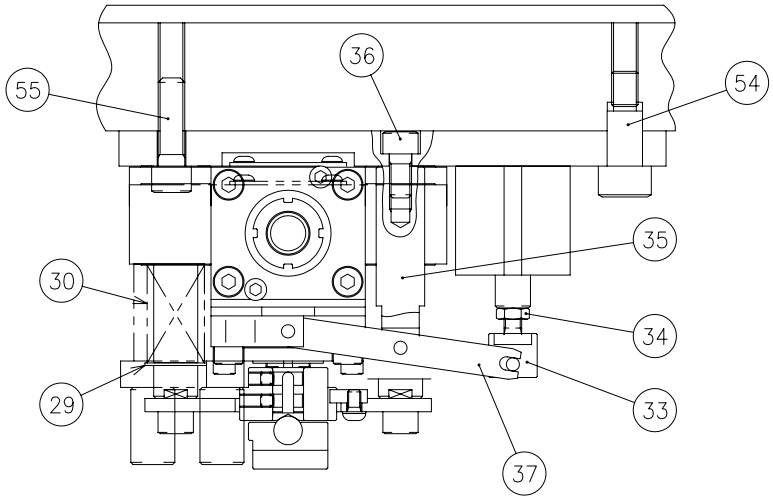

VIEW B
(Cylinder 8ST)

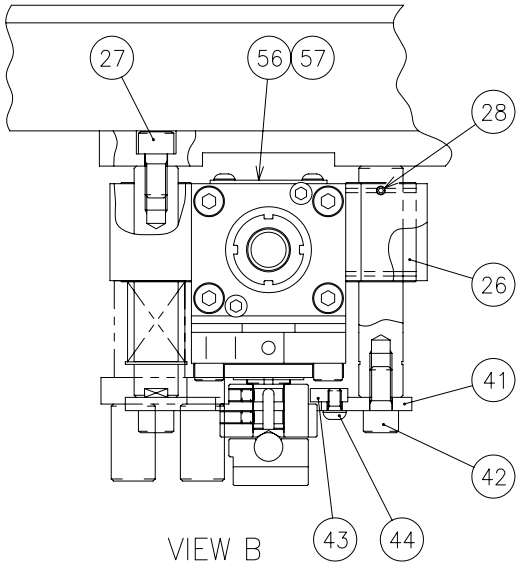

VIEW B

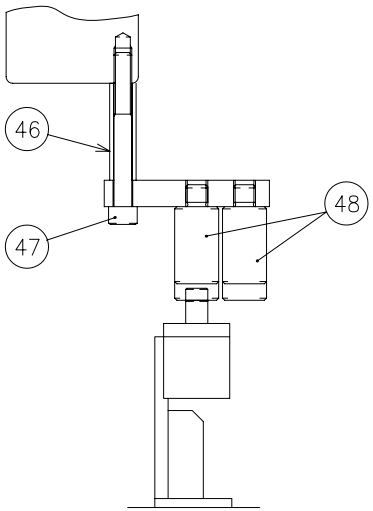

VIEW C
(Cylinder 8ST)

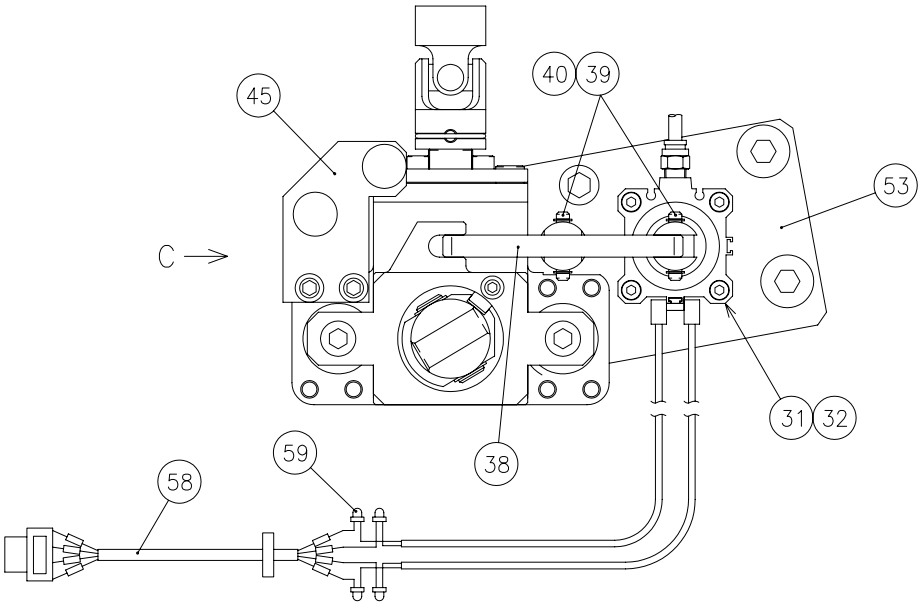

6877173

AI(2) From Serial No.36102001 and after

Index	Code	Parts Name	Drawing No.	Type	Maker	Q'ty	Note
1	74416391	Gear Box	6813135 D			1	
2	74382635	Drive Bevel Gear	6575823			1	
3	74565993	Ball Bearing Set	7830606	EPBA20-13DB+KL12	NSK	1	
4	75414510	Lock Nut	P406030003	AN-04		1	
5	75414511	Lock Washer	P406040003	AW-04		1	
6	74570104	Unit Case	6813136 A			1	
7	74384527	Gear Adjusting Collar	6502897 B			2	
8	79566121	Hex Soc Cap Screw	P330230007	M8X25		4	
9	74570105	Bearing Retainer (A)	6813137			1	
10	79565201	Hex Soc Cap Screw	P330220004	M6X12		2	
11	74570106	Point Case (Upper)	6813139 A			1	
12	10443022	Hex Soc Cap Screw	P330230009	M8X35		4	
13	74565995	Ball Bearing Set	7830605	EPBA20-13DBCP10	NSK	1	
14	74568287	Bearing Retainer (B)	6575827 B			1	
15	79565201	Hex Soc Cap Screw	P330220004	M6X12		2	
16	74384534	Center Bevel Gear (U)	6570283 A			1	
17	75414510	Lock Nut	P406030003	AN-04		1	
18	75414511	Lock Washer	P406040003	AW-04		1	
19	74570107	Point U	7401691 A			1	

Index	Code	Parts Name	Drawing No.	Type	Maker	Q'ty	Note
20	74534623	Socket Set Screw	P330603005	M6X6(Knurled cup-end)	SPS/UNBRAKO	2	
21	74571414	Parallel Key (5X5X16)	6811101 A			1	
22	74350701	Pin	0812100			1	
23	79572402	Hex Soc Cap Screw	P330210009	M5X20		2	
24	74515614	Locating Snap Ring	P406108036	STW-13	OCHIAI	2	
25	74379584	Clamp Shaft	6501943 B			1	
26	74570110	Stroke Bushing	7830688	SR20B/SN20X105	NIPPON BEARING	2	
27	86611904	Hex Soc Cap Screw	P330240006	M10X20		2	
28	74379606	Socket Set Screw	P330570006	M4X8(Dog-end)		2	
29	86611033	Locating Snap Ring	P406108043	STW-20	OCHIAI	2	
30	74379583	UP Spring	6045724			2	
31	74570111	Air Cylinder (Compact Type)	7832797	CQ2B40C-W1680-10		1	
32	74722702	Hex Soc Cap Screw	P330210016	M5X55		4	
33	74570112	Knuckle Joint	6813142			1	
34	86263207	Nut	P332000018	M8(Thin)		1	
35	74570113	Stand	6813143			1	
36	86611904	Hex Soc Cap Screw	P330240006	M10X20		1	
37	74570114	Clamp Lever	6813145			1	
38	74381574	Parallel Pin	P337020034	A-6X20		1	

Index	Code	Parts Name	Drawing No.	Type	Maker	Q'ty	Note
39	74570115	A/I Cylinder Pin	6813144			2	
40	36181529	Locating Snap Ring	P406108030	STW-6	OCHIAI	4	
41	74570116	Point Plate	6813146			1	
42	86611904	Hex Soc Cap Screw	P330240006	M10X20		2	
43	74382632	Key	6502905			1	
44	36379029	Button Head Screw	P334500013	M6X10		1	
45	74571415	Push Rod Arm	6811095			1	
46	74570118	Spacer (H)	6813150			1	
47	36326825	Hex Soc Cap Screw	P330230016	M8X70		2	
48	74386766	B Rod L1	6593236			2	
49	74379564	Universal Joint	7830034		KYOWA	1	
50	74379608	Parallel Pin	P337020036	A-6X30		1	
51	74571414	Parallel Key (5X5X16)	6811101 A			1	
52	36147504	Socket Set Screw	P330550024	M6X6(Flat-end)		2	
53	74570119	Gear Box Bracket (Upper)	6813152			1	
54	74561483	Shoulder Bolt	P338134074	MSB16-25	MISUMI	2	
55	86213032	Hex Soc Cap Screw	P330250007	M12X40		2	
56	74379621	Spacer	6520789			1	
57	31179660	Button Head Screw	P334500009	M5X10		4	

Index	Code	Parts Name	Drawing No.	Type	Maker	Q'ty	Note
58	74811136	Cable S-3	6877628			1	
59	74382938	Terminal	P869150001	CE-1		4	

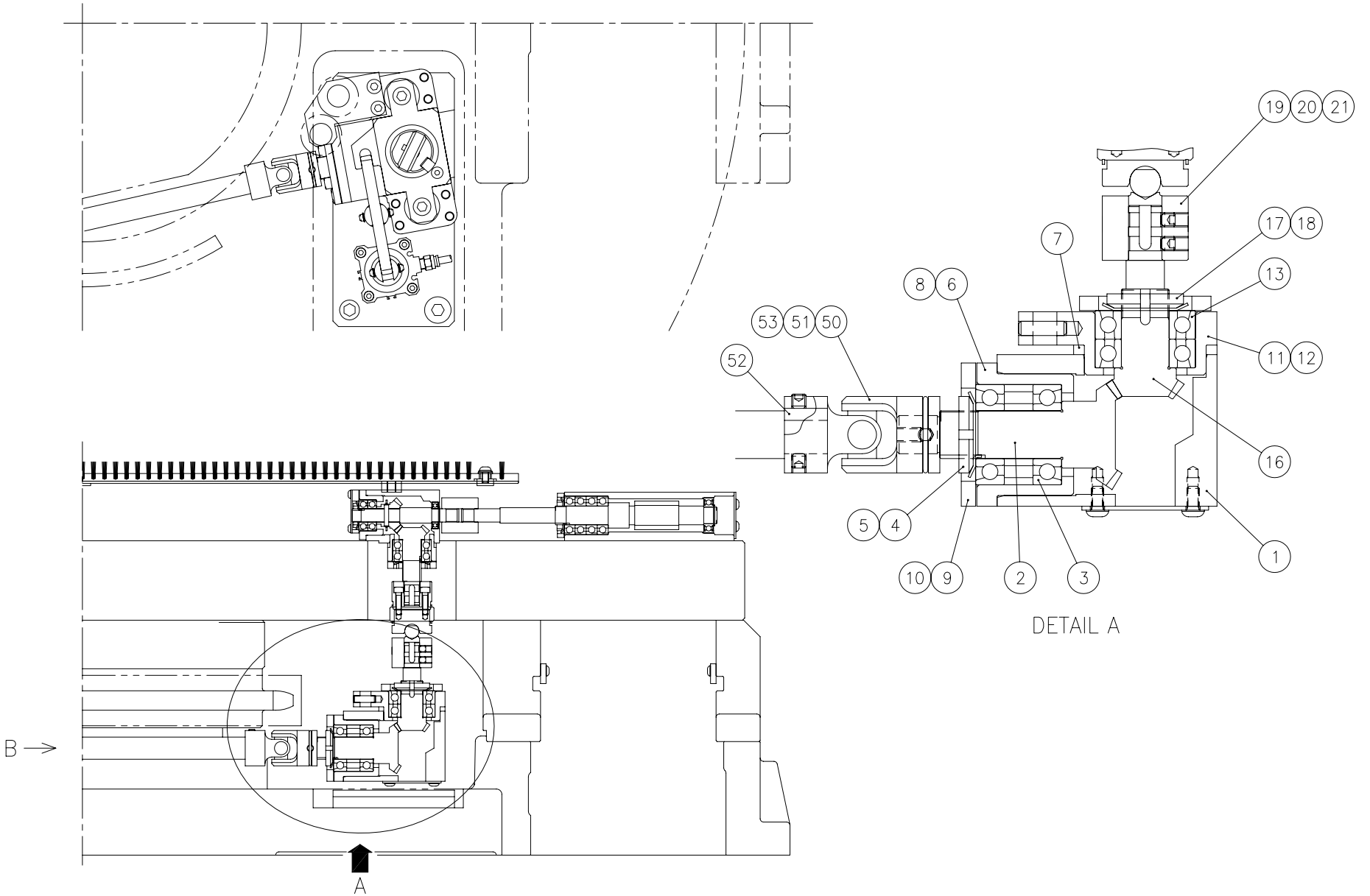
19
20
21
17
18
7
13
8
6
53
51
50
11
12
52
16
5
4
1
10
9
2
3
DETAIL A
B
A
6877174

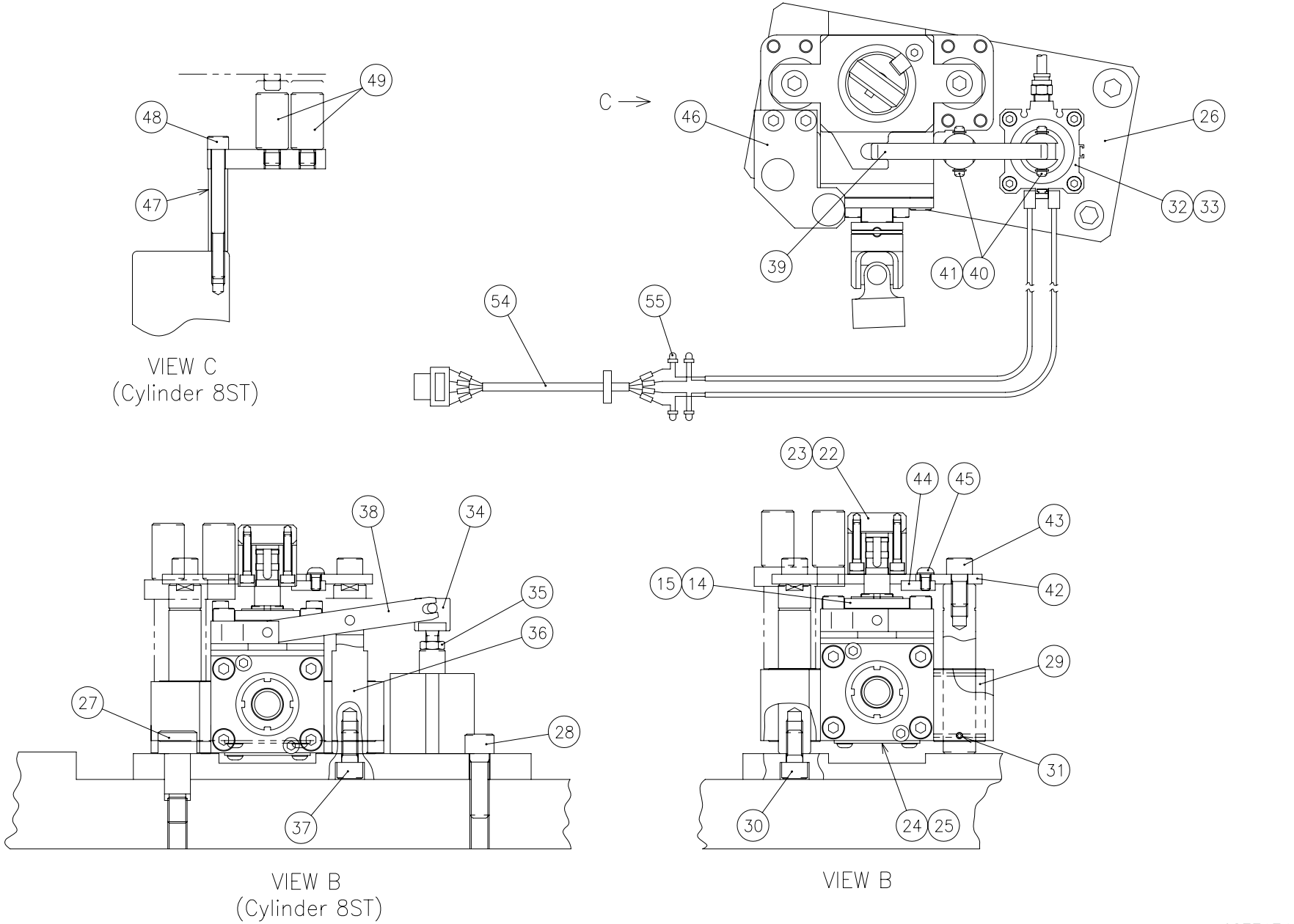
49
48
47
VIEW C
(Cylinder 8ST)
C
46
26
32
33
39
41
40
54
55
38
34
35
36
27
28
37
VIEW B
(Cylinder 8ST)
23
22
44
45
43
15
14
42
29
31
30
24
25
VIEW B
6877174

Index	Code	Parts Name	Drawing No.	Type	Maker	Q'ty	Note
1	74416391	Gear Box	6813135 D			1	
2	74382635	Drive Bevel Gear	6575823			1	
3	74565993	Ball Bearing Set	7830606	EPBA20-13DB+KL12	NSK	1	
4	75414510	Lock Nut	P406030003	AN-04		1	
5	75414511	Lock Washer	P406040003	AW-04		1	
6	74570104	Unit Case	6813136 A			1	
7	74384527	Gear Adjusting Collar	6502897 B			2	
8	79566121	Hex Soc Cap Screw	P330230007	M8X25		4	
9	74570105	Bearing Retainer (A)	6813137			1	
10	79565201	Hex Soc Cap Screw	P330220004	M6X12		2	
11	74570120	Point Case (Lower)	6813140 A			1	
12	10443022	Hex Soc Cap Screw	P330230009	M8X35		4	
13	74565995	Ball Bearing Set	7830605	EPBA20-13DBCP10	NSK	1	
14	74568287	Bearing Retainer (B)	6575827 B			1	
15	79565201	Hex Soc Cap Screw	P330220004	M6X12		2	
16	74570121	Center Bevel Gear (L)	6813138			1	
17	75414510	Lock Nut	P406030003	AN-04		1	
18	75414511	Lock Washer	P406040003	AW-04		1	
19	74570122	Pin Retainer (L)	7401702 A			1	

Index	Code	Parts Name	Drawing No.	Type	Maker	Q'ty	Note
20	74534623	Socket Set Screw	P330603005	M6X6(Knurled cup-end)	SPS/UNBRAKO	2	
21	74571414	Parallel Key (5X5X16)	6811101 A			1	
22	74379617	Driven Pin	6501944 B			1	
23	79316111	Hex Soc Cap Screw	P330210010	M5X25		2	
24	74379621	Spacer	6520789			1	
25	31179660	Button Head Screw	P334500009	M5X10		4	
26	74570123	Gear Box Bracket (Lower)	6813147			1	
27	74561483	Shoulder Bolt	P338134074	MSB16-25	MISUMI	2	
28	86213032	Hex Soc Cap Screw	P330250007	M12X40		1	
29	74570110	Stroke Bushing	7830688	SR20B/SN20X105	NIPPON BEARING	2	
30	86611904	Hex Soc Cap Screw	P330240006	M10X20		2	
31	74379606	Socket Set Screw	P330570006	M4X8(Dog-end)		2	
32	74570111	Air Cylinder (Compact Type)	7832797	CQ2B40C-W1680-10		1	
33	74722702	Hex Soc Cap Screw	P330210016	M5X55		4	
34	74570112	Knuckle Joint	6813142			1	
35	86263207	Nut	P332000018	M8(Thin)		1	
36	74570113	Stand	6813143			1	
37	86611904	Hex Soc Cap Screw	P330240006	M10X20		1	
38	74570114	Clamp Lever	6813145			1	

Index	Code	Parts Name	Drawing No.	Type	Maker	Q'ty	Note
39	74381574	Parallel Pin	P337020034	A-6X20		1	
40	74570115	A/I Cylinder Pin	6813144			2	
41	36181529	Locating Snap Ring	P406108030	STW-6	OCHIAI	4	
42	74570116	Point Plate	6813146			1	
43	86611904	Hex Soc Cap Screw	P330240006	M10X20		2	
44	74570124	Key (L)	6813149			1	
45	36379029	Button Head Screw	P334500013	M6X10		1	
46	74571415	Push Rod Arm	6811095			1	
47	74570126	Spacer (L)	6813141			1	
48	74300608	Hex Soc Cap Screw	P330230018	M8X80		2	
49	74386766	B Rod L1	6593236			2	
50	74379564	Universal Joint	7830034		KYOWA	1	
51	74379608	Parallel Pin	P337020036	A-6X30		1	
52	74571414	Parallel Key (5X5X16)	6811101 A			1	
53	36147504	Socket Set Screw	P330550024	M6X6(Flat-end)		2	
54	74811137	Cable S-8	6877629			1	
55	74382938	Terminal	P869150001	CE-1		4	

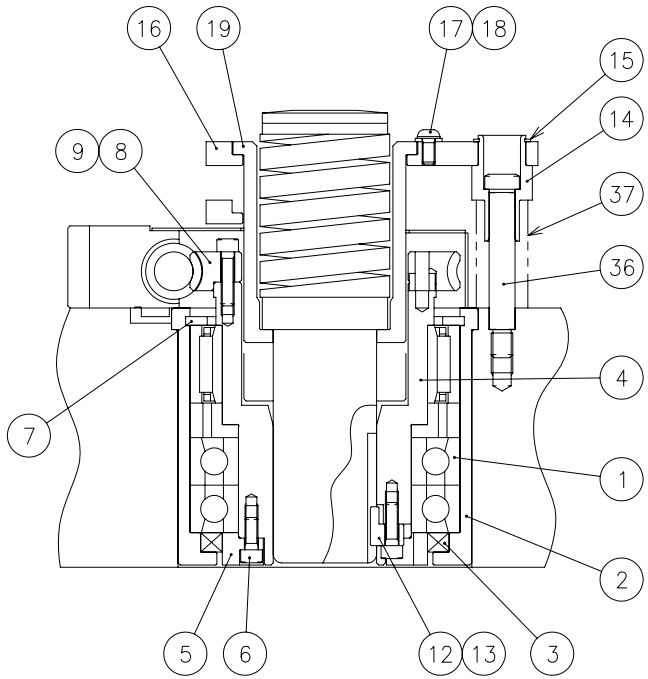

SECTION A–A

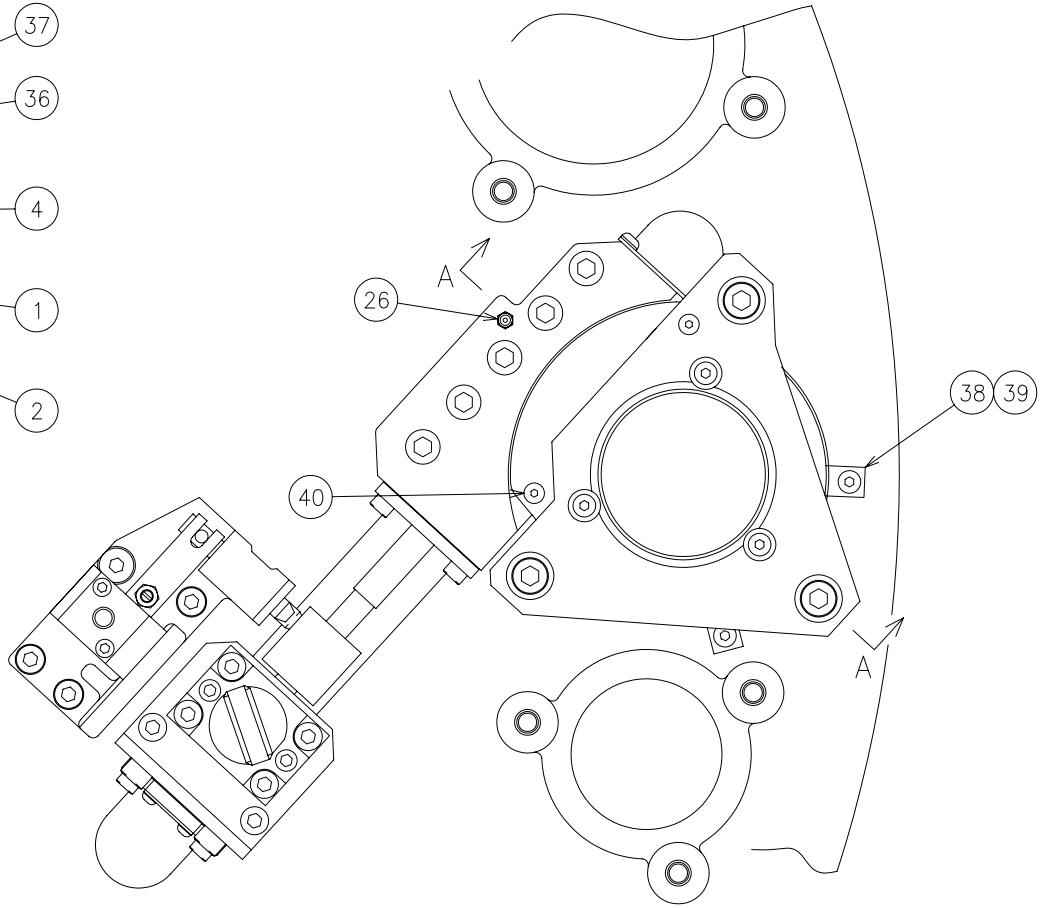

6877164

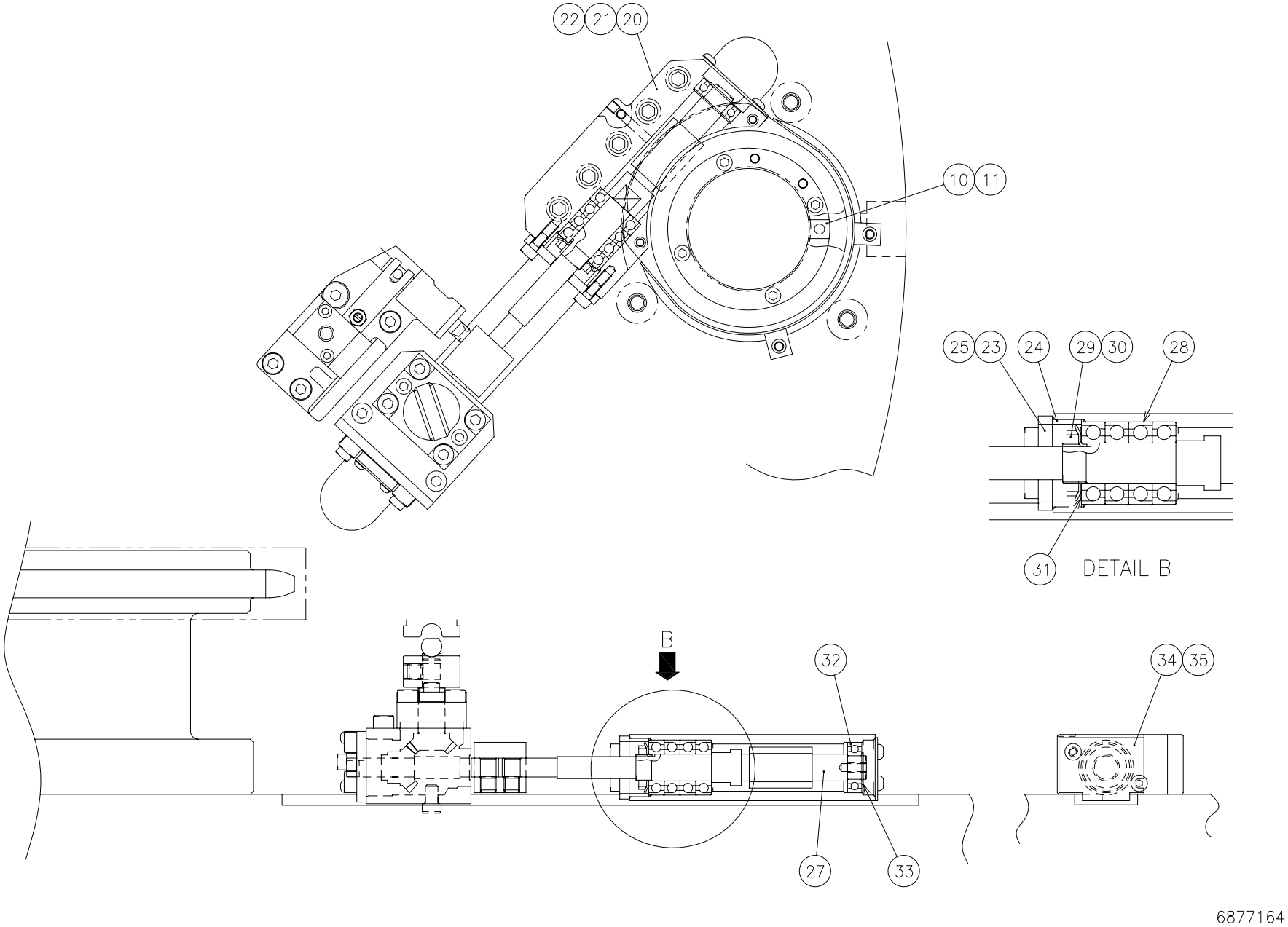
22
21
20
10
11
25
23
24
29
30
28
31
DETAIL B
B
32
34
35
27
33
6877164

Index	Code	Parts Name	Drawing No.	Type	Maker	Q'ty	Note
1	74374830	Upper Bearing Unit	7830023			1	
2	74387590	Bearing Holder (Upper)	7401711			1	
3	74715314	Oil Seal	P590122012	VC09511509	NOK	1	
4	74570127	Guide Holder	6813117 A			1	
5	74387593	Seal Retainer	7401713			1	
6	79564305	Hex Soc Cap Screw	P330220006	M6X15		4	
7	74379646	Locating Snap Ring	P406108028	RTW-125	OCHIAI	1	
8	74570128	Worm Wheel (Upper)	6813118			1	
9	79565422	Hex Soc Cap Screw	P330220011	M6X25		4	
10	74313917	Wheel Key (Type-1)	0822421 A			1	
11	36177019	Spring Pin	P337030056	6X15		1	
12	74569848	1/2" Guide Key	3008133			1	
13	79567722	Hex Soc Cap Screw	P330220009	M6X20		1	
14	74571431	Lifter Collar (4-1/2")	6811090			3	
15	74314617	Locating Snap Ring	P406108044	STW-22	OCHIAI	3	
16	74571416	Link Holder (1-1/4")	6915262			1	
17	74732449	Washer (M6)	0821819 A			3	
18	31179394	Button Head Screw	P334500014	M6X12		3	
19	74570132	Lifter Ring	6813122			1	

Index	Code	Parts Name	Drawing No.	Type	Maker	Q'ty	Note
20	74571418	Worm Housing U (1-1/4")	6811086			1	
21	36147504	Socket Set Screw	P330550024	M6X6(Flat-end)		1	
22	36367640	Hex Soc Cap Screw	P330240012	M10X50		5	
23	74570135	Bearing Retainer (E)	6575856 A			1	
24	74384545	Spacer	6536122			1	
25	79564305	Hex Soc Cap Screw	P330220006	M6X15		4	
26	31179170	Grease Nipple	P560600002	A-MT6X1		1	
27	74569126	Worm Shaft (1-1/4")	6536123 A			1	
28	74312511	Ball Bearing	7932023	7003DBB(Level-5)	NSK	1	
29	31182005	Lock Nut	P406030002	AN-03		1	
30	31182004	Lock Washer	P406040002	AW-03		1	
31	74313812	Seal	0822398			1	
32	74570322	Deep Groove Ball Bearing	P400010701	6002ZZ	NSK(equality)	1	
33	78183414	Locating Snap Ring	P406108038	STW-15	OCHIAI	1	
34	74571419	Cover	6811087			1	
35	31179660	Button Head Screw	P334500009	M5X10		2	
36	74569846	Shoulder Screw	3204978			3	
37	74569851	Spring (3-1/2",4-1/2")	3204979 A			3	
38	74571417	Wheel Cover (1-1/4")	6811085			1	

Index	Code	Parts Name	Drawing No.	Type	Maker	Q'ty	Note
39	31183033	Hex Soc Cap Screw	P330220003	M6X10		2	
40	31179660	Button Head Screw	P334500009	M5X10		2	

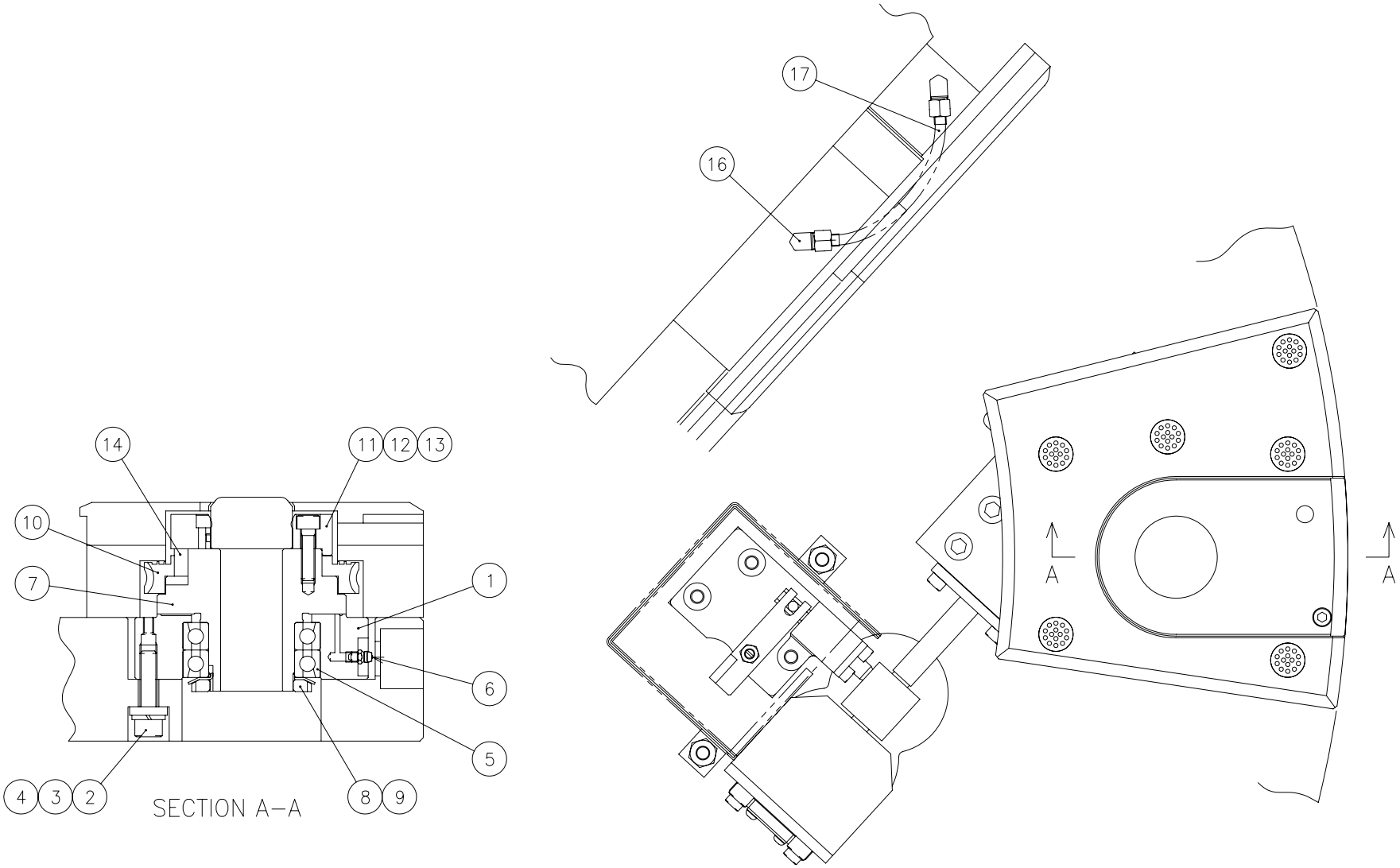

6877169

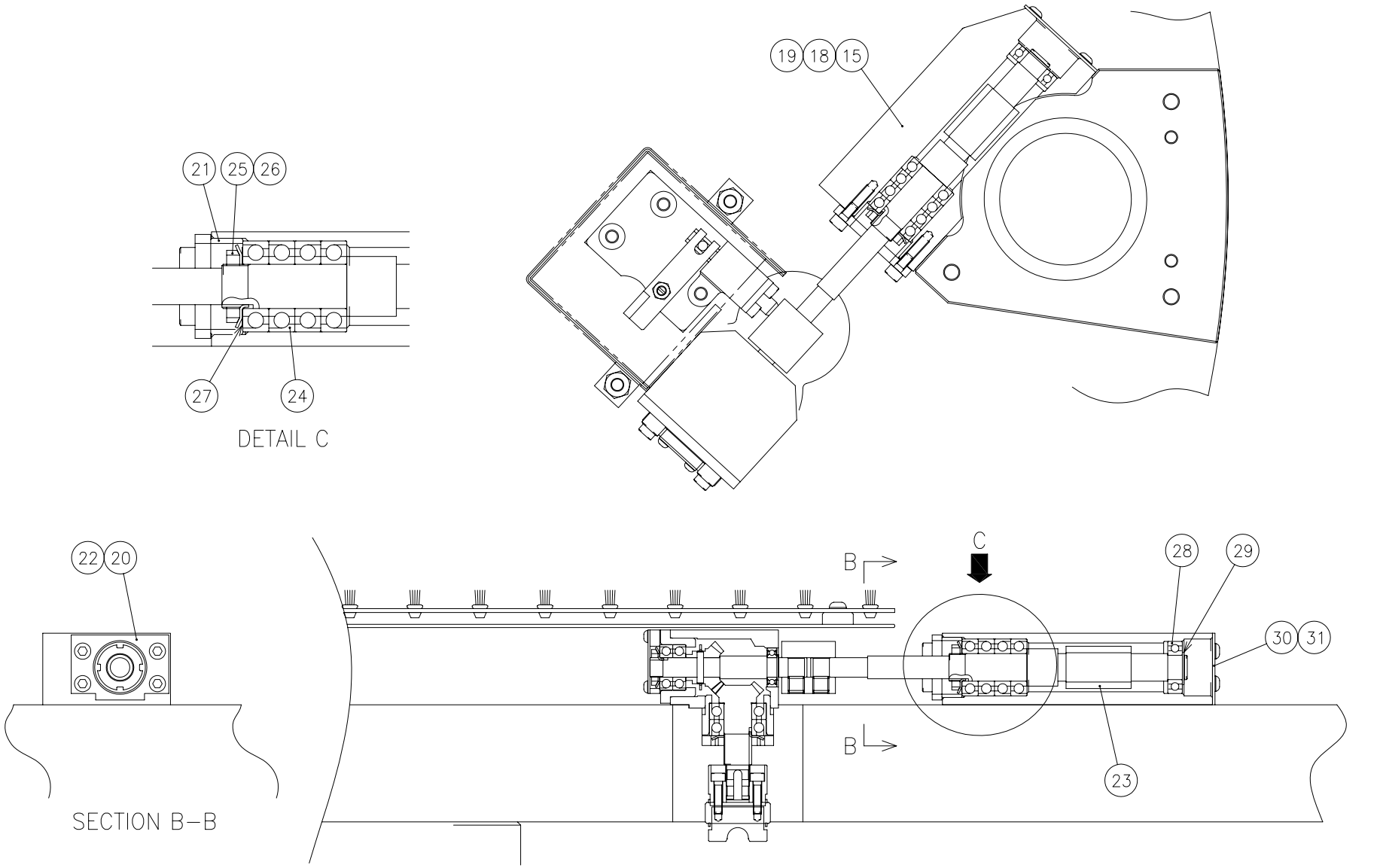
21
25
26
27
24
DETAIL C
19
18
15
22
20
SECTION B–B
B
C
B
28
29
30
31
23
6877169

Index	Code	Parts Name	Drawing No.	Type	Maker	Q'ty	Note
1	74570138	Bearing Holder (L)	6813112			1	
2	74306022	Washer (M10)	0827013 B			7	
3	86610807	Hex Soc Cap Screw	P330240010	M10X40		7	
4	79564811	Spring Washer	P336050007	10		7	
5	74374840	Ball Bearing	7932017	7010CDB,D50XD80XB32		1	
6	31179170	Grease Nipple	P560600002	A-MT6X1		1	
7	74379651	Holder Base	6570451 A			1	
8	74313710	Crown Nut	0822308			1	
9	74314906	Lock Washer	P406040009	AW-10		1	
10	74571420	Worm Wheel (Lower)	0802244 E		ALBC	1	
11	74561487	Die Holder	7401733 A			1	
12	79568702	Hex Soc Cap Screw	P330230008	M8X30		4	
13	74563132	Ball Plunger	P338182011	BP-8-H	JEC	1	
14	74379655	Lower Wheel Key	6570455			1	
15	74571421	Worm Housing L (1-1/4")	6915271			1	
16	74379661	Bite Type Pipe Fitting	P585564037	L4N4X2-PT1/8	NITTA MOORE	1	
17	74419337	Plastic Hose	P230212076	N5-4-4X2(White)-0.3M	NITTA MOORE	1	
18	74383549	Hex Soc Cap Screw	P330240016	M10X70		5	
19	74306022	Washer (M10)	0827013 B			5	

Index	Code	Parts Name	Drawing No.	Type	Maker	Q'ty	Note
20	74570135	Bearing Retainer (E)	6575856 A			1	
21	74384545	Spacer	6536122			1	
22	79564305	Hex Soc Cap Screw	P330220006	M6X15		4	
23	74569126	Worm Shaft (1-1/4")	6536123 A			1	
24	74312511	Ball Bearing	7932023	7003DBB(Level-5)	NSK	1	
25	31182005	Lock Nut	P406030002	AN-03		1	
26	31182004	Lock Washer	P406040002	AW-03		1	
27	74313812	Seal	0822398			1	
28	74570322	Deep Groove Ball Bearing	P400010701	6002ZZ	NSK(equality)	1	
29	78183414	Locating Snap Ring	P406108038	STW-15	OCHIAI	1	
30	74379654	Cover (1-1/4")	6570454			1	
31	31179660	Button Head Screw	P334500009	M5X10		2	

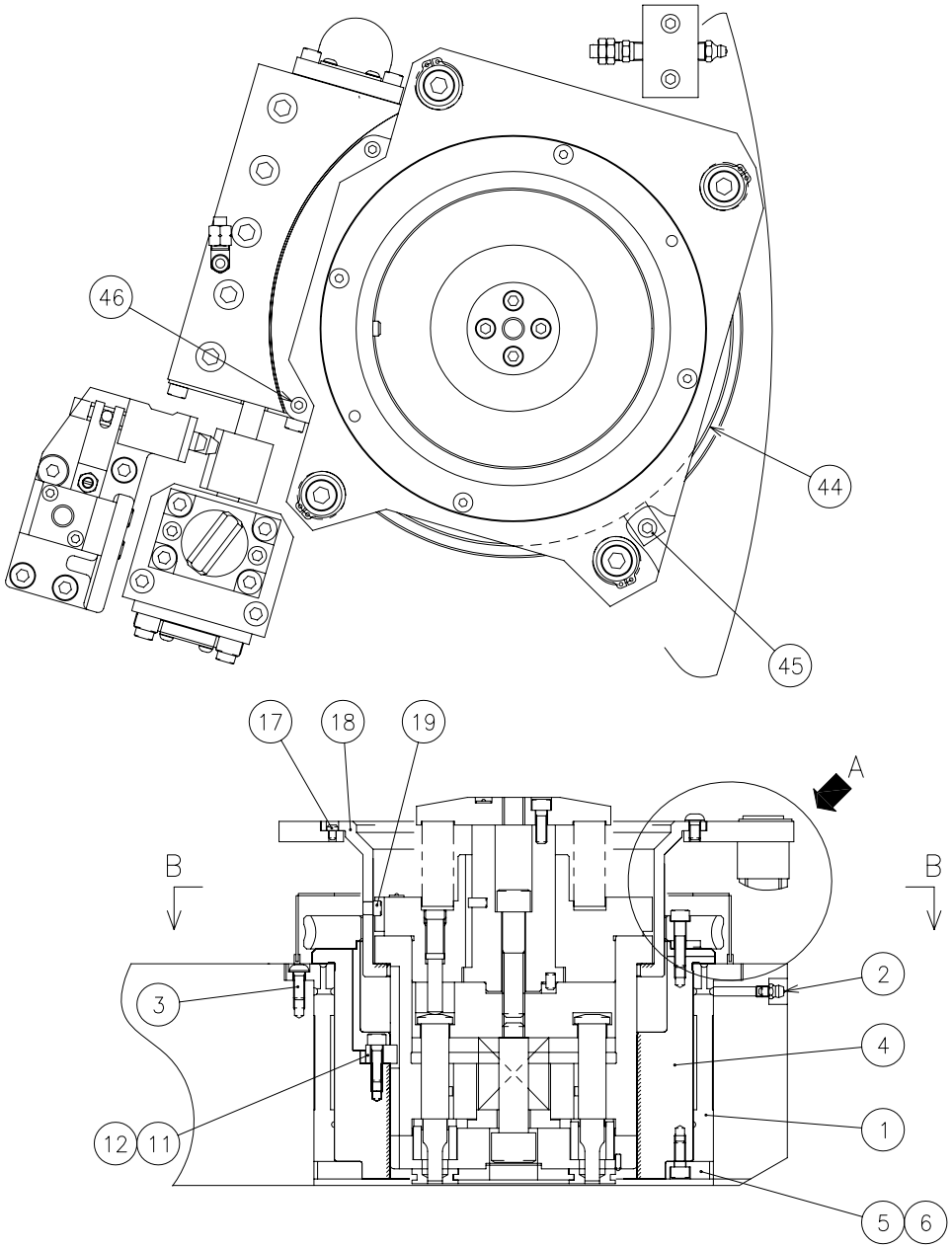

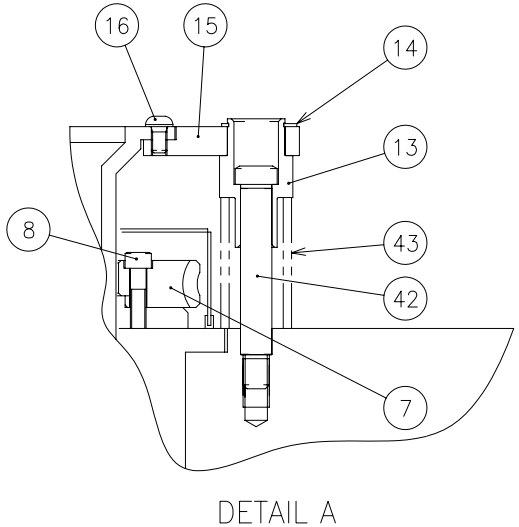

6877179

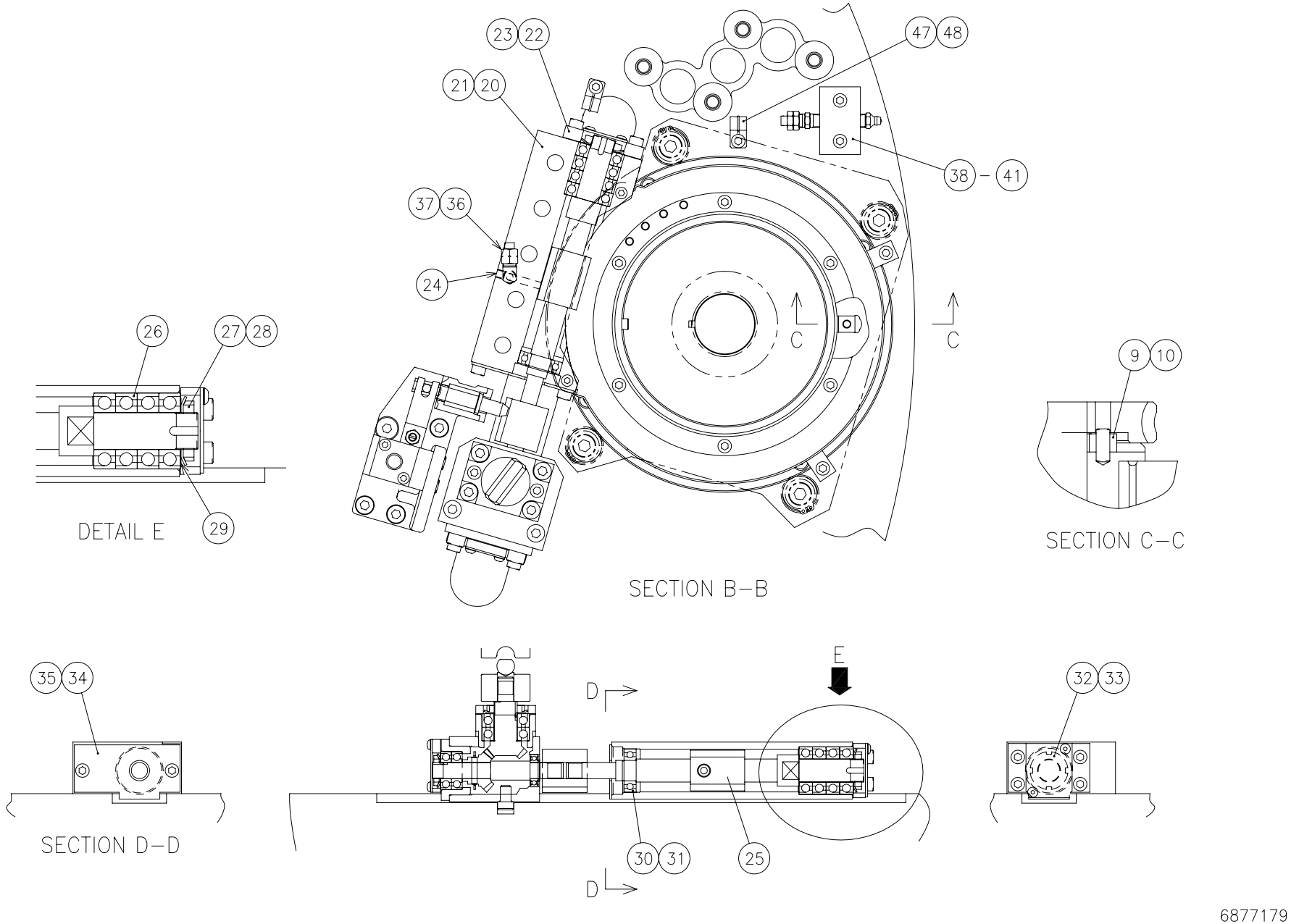
23
22
21
20
47
48
38 – 41
37
36
24
26
27
28
29
DETAIL E
C
C
9
10
SECTION C–C
SECTION B–B
35
34
SECTION D–D
E
D
D
30
31
25
32
33
6877179

Index	Code	Parts Name	Drawing No.	Type	Maker	Q'ty	Note
1	74566472	Guide Bushing (Upper)	7830267 D		OILES Industry	1	
2	31179170	Grease Nipple	P560600002	A-MT6X1		1	
3	74300624	Button Head Screw	P334500015	M6X15		4	
4	74571429	Guide Holder	6811089			1	
5	74379744	Seal Retainer	6532923			1	
6	79564305	Hex Soc Cap Screw	P330220006	M6X15		6	
7	74379745	Worm Wheel (Upper)	6532924 B			1	
8	79565422	Hex Soc Cap Screw	P330220011	M6X25		6	
9	74313917	Wheel Key (Type-1)	0822421 A			1	
10	36177019	Spring Pin	P337030056	6X15		1	
11	74379746	Guide Key	6532925			1	
12	79567722	Hex Soc Cap Screw	P330220009	M6X20		1	
13	74571431	Lifter Collar (4-1/2")	6811090			4	
14	74314617	Locating Snap Ring	P406108044	STW-22	OCHIAI	4	
15	74571432	Link Holder (4-1/2")	6915279			1	
16	36379029	Button Head Screw	P334500013	M6X10		4	
17	74379759	Locating Pin	P337104003	JPDA4-6	MISUMI	2	
18	74571433	Lifter Ring (4-1/2")	6811093			1	
19	74384558	Pin	6532939	A-8X14		1	

Index	Code	Parts Name	Drawing No.	Type	Maker	Q'ty	Note
20	74571435	Worm Housing U (4-1/2")	6915282			1	
21	36367640	Hex Soc Cap Screw	P330240012	M10X50		5	
22	74384561	Bearing Retainer	6536174			1	
23	79564305	Hex Soc Cap Screw	P330220006	M6X15		4	
24	36147504	Socket Set Screw	P330550024	M6X6(Flat-end)		1	
25	74384559	Worm Shaft (4-1/2")	6536172			1	
26	74312511	Ball Bearing	7932023	7003DBB(Level-5)	NSK	1	
27	31182005	Lock Nut	P406030002	AN-03		1	
28	31182004	Lock Washer	P406040002	AW-03		1	
29	74313812	Seal	0822398			1	
30	31162520	Deep Groove Ball Bearing	P400010006	6002ZZ		1	
31	78183414	Locating Snap Ring	P406108038	STW-15	OCHIAI	1	
32	74384560	Cap	6536173			1	
33	74183304	Button Head Screw	P334500004	M4X8		2	
34	74379755	Cover U (B)	6532934			1	
35	31183033	Hex Soc Cap Screw	P330220003	M6X10		2	
36	74379661	Bite Type Pipe Fitting	P585564037	L4N4X2-PT1/8	NITTA MOORE	1	
37	74419337	Plastic Hose	P230212076	N5-4-4X2(White)-0.3M	NITTA MOORE	1	
38	74379742	Air Cooling Manifold (A)	0827681			1	

Index	Code	Parts Name	Drawing No.	Type	Maker	Q'ty	Note
39	86213043	Hex Soc Cap Screw	P330220012	M6X30		2	
40	31179170	Grease Nipple	P560600002	A-MT6X1		1	
41	74379761	Bite Type Pipe Fitting	P585534027	C4N4X2-PT1/8	NITTA MOORE	1	
42	74569846	Shoulder Screw	3204978			4	
43	74569851	Spring (3-1/2",4-1/2")	3204979 A			4	
44	74571434	Wheel Cover (4-1/2")	6811092			1	
45	31183033	Hex Soc Cap Screw	P330220003	M6X10		2	
46	31179660	Button Head Screw	P334500009	M5X10		2	
47	10560113	Saddle For Conduct	P381017001	CH-6	DAIWA DENGYO	2	
48	31183033	Hex Soc Cap Screw	P330220003	M6X10		2	

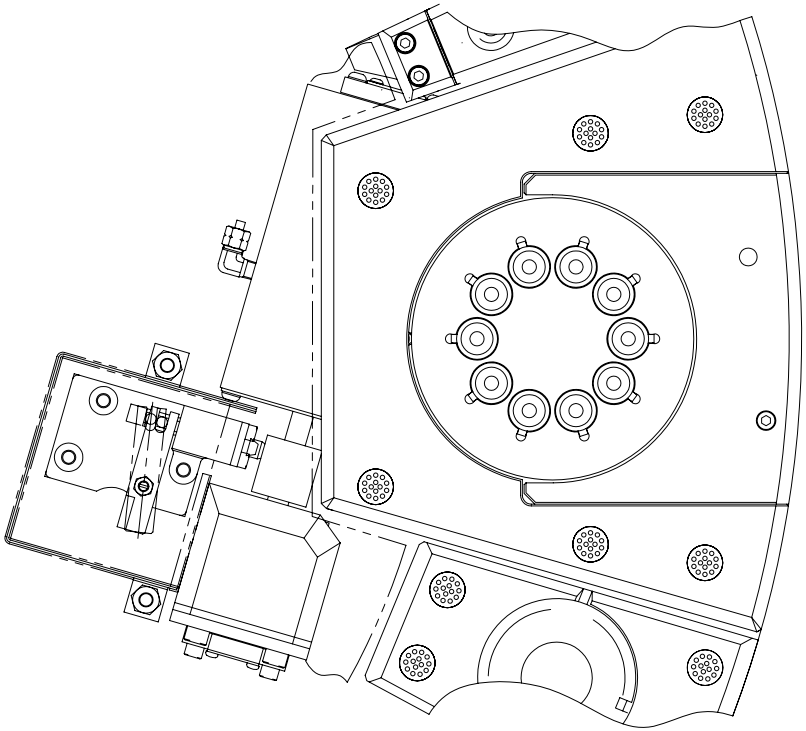

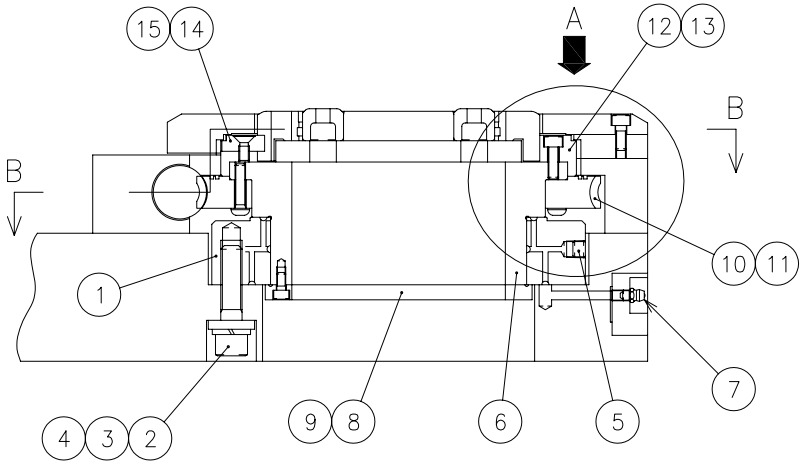

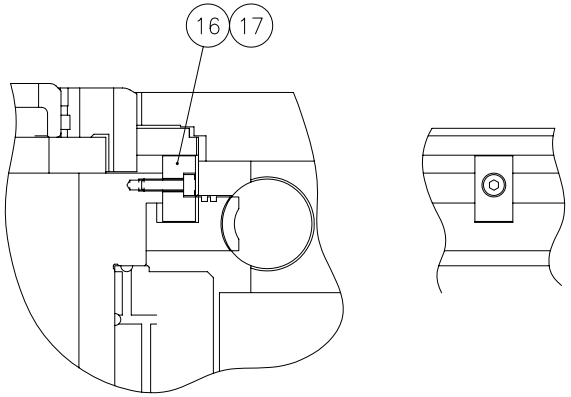

6877185

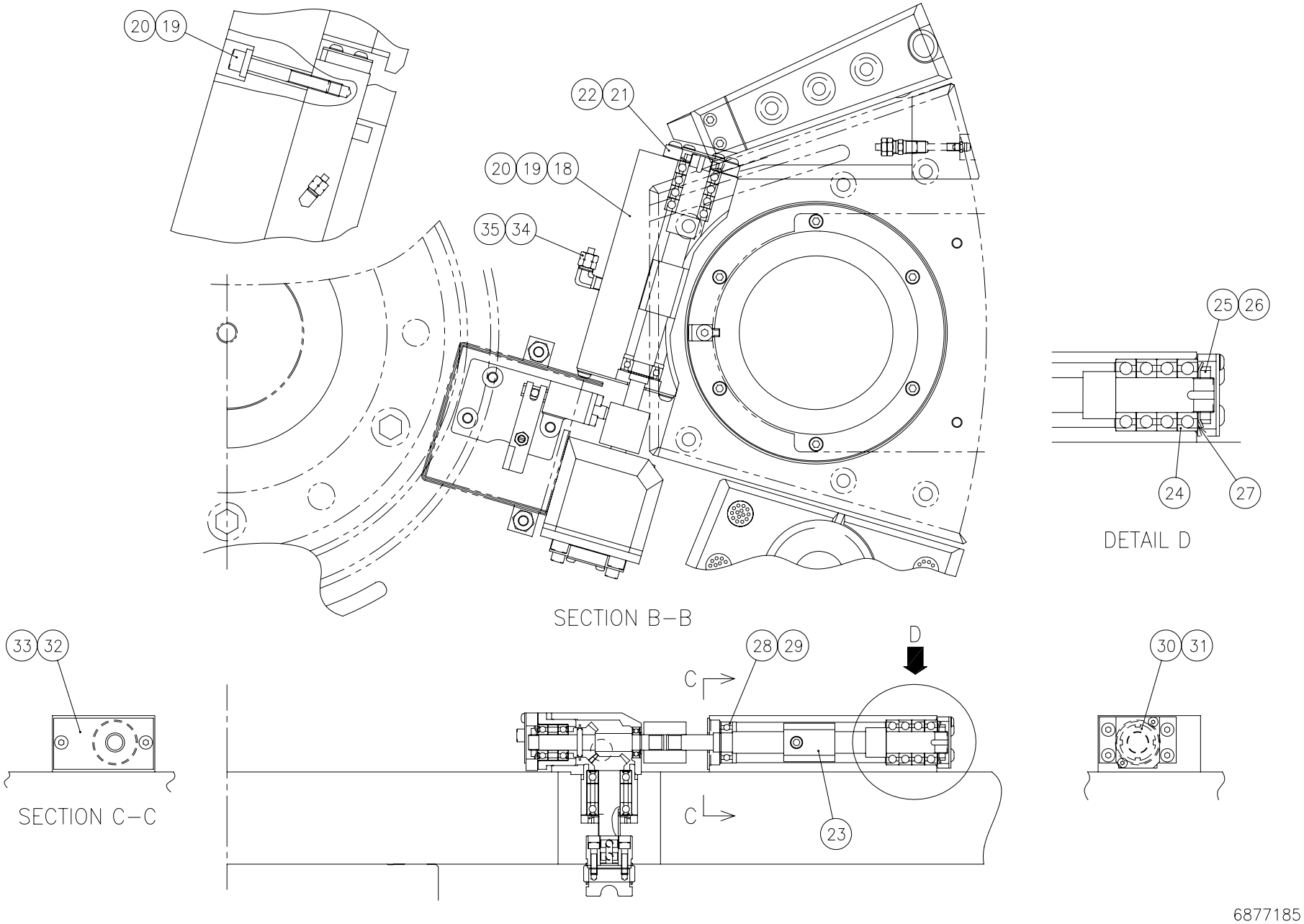
20 19
22 21
20 19 18
35 34
25 26
24 27
DETAIL D
SECTION B–B
33 32
28 29
D
30 31
C
C
23
SECTION C–C
6877185

Index	Code	Parts Name	Drawing No.	Type	Maker	Q'ty	Note
1	74569419	Guide Bushing (Lower)	6532941 C			1	
2	74303703	Washer (M12)	0827014 B			8	
3	79316507	Hex Soc Cap Screw	P330250009	M12X50		8	
4	86610819	Spring Washer	P336050008	12		8	
5	74702340	Plug For Piping	P580208001	GM-1/8	GOSHO Works	2	
6	74569420	Die Holder Retainer (4-1/2")	6532942 D			1	
7	31179170	Grease Nipple	P560600002	A-MT6X1		1	
8	74379767	Flange	6532943			1	
9	79573416	Hex Soc Cap Screw	P330210003	M5X10		6	
10	74379768	Worm Wheel (Lower)	6532945 C			1	
11	31182980	Button Head Screw	P334500028	M6X25		6	
12	74387041	4-1/2" Die Holder	6532977			1	
13	31180307	Hex Soc Cap Screw	P330220008	M6X18		6	
14	74387042	Die Key (4-1/2")	6532969			1	
15	74314612	Flat Head Bolt	P334520002	M6X14		1	
16	74379771	4-1/2" Lower Wheel Key	6532948 A			1	
17	36323412	Hex Soc Cap Screw	P330200017	M4X14		1	
18	74571436	Worm Housing L (4-1/2")	6915286			1	
19	78180217	Hex Soc Cap Screw	P330240019	M10X85		5	

Index	Code	Parts Name	Drawing No.	Type	Maker	Q'ty	Note
20	74306022	Washer (M10)	0827013 B			5	
21	74384561	Bearing Retainer	6536174			1	
22	74300624	Button Head Screw	P334500015	M6X15		4	
23	74384559	Worm Shaft (4-1/2")	6536172			1	
24	74312511	Ball Bearing	7932023	7003DBB(Level-5)	NSK	1	
25	31182005	Lock Nut	P406030002	AN-03		1	
26	31182004	Lock Washer	P406040002	AW-03		1	
27	74313812	Seal	0822398			1	
28	31162520	Deep Groove Ball Bearing	P400010006	6002ZZ		1	
29	78183414	Locating Snap Ring	P406108038	STW-15	OCHIAI	1	
30	74384560	Cap	6536173			1	
31	74183304	Button Head Screw	P334500004	M4X8		2	
32	74379775	Cover L (B)	6532953			1	
33	36379029	Button Head Screw	P334500013	M6X10		2	
34	74379661	Bite Type Pipe Fitting	P585564037	L4N4X2-PT1/8	NITTA MOORE	1	
35	74419337	Plastic Hose	P230212076	N5-4-4X2(White)-0.3M	NITTA MOORE	1	

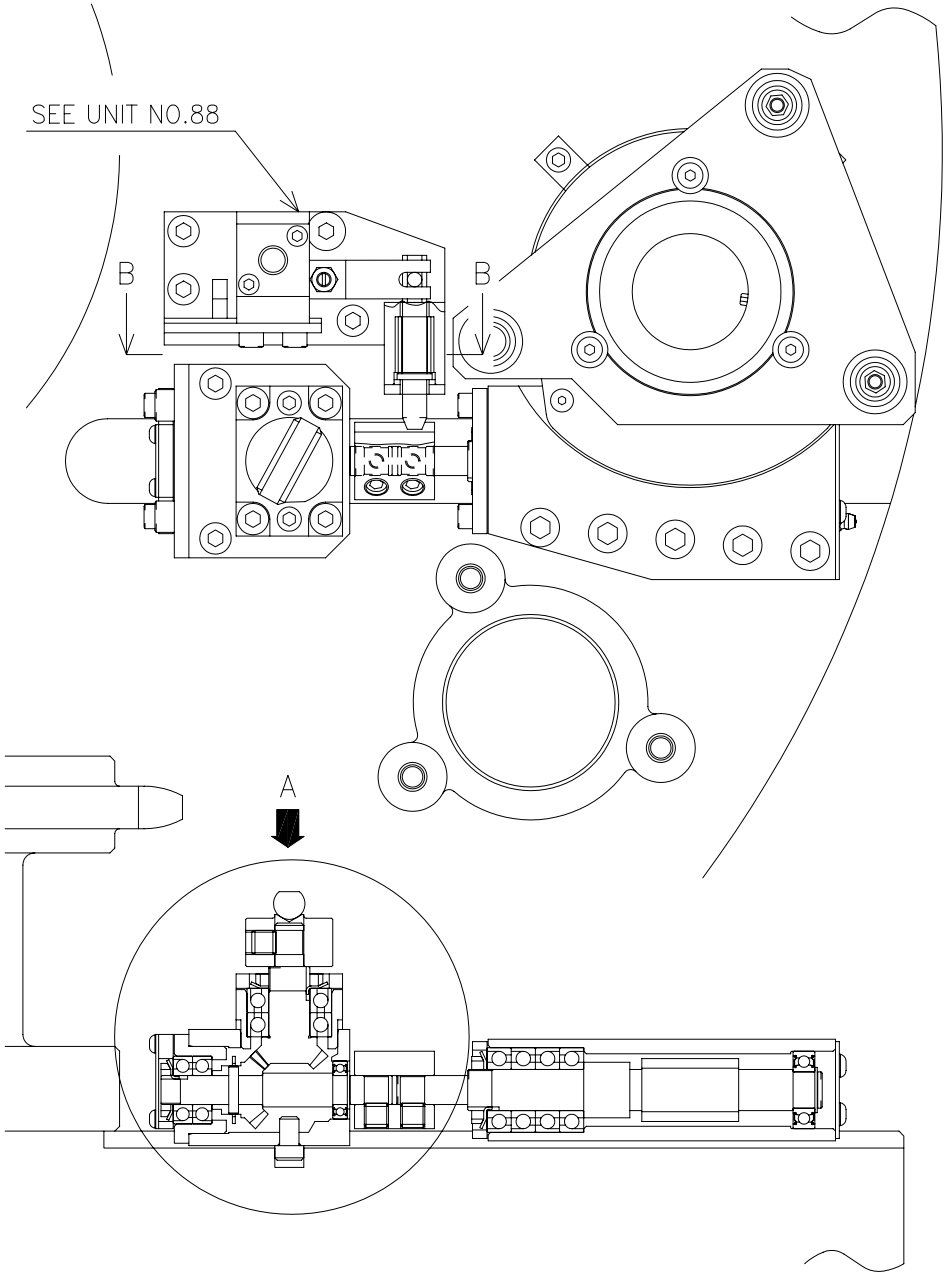

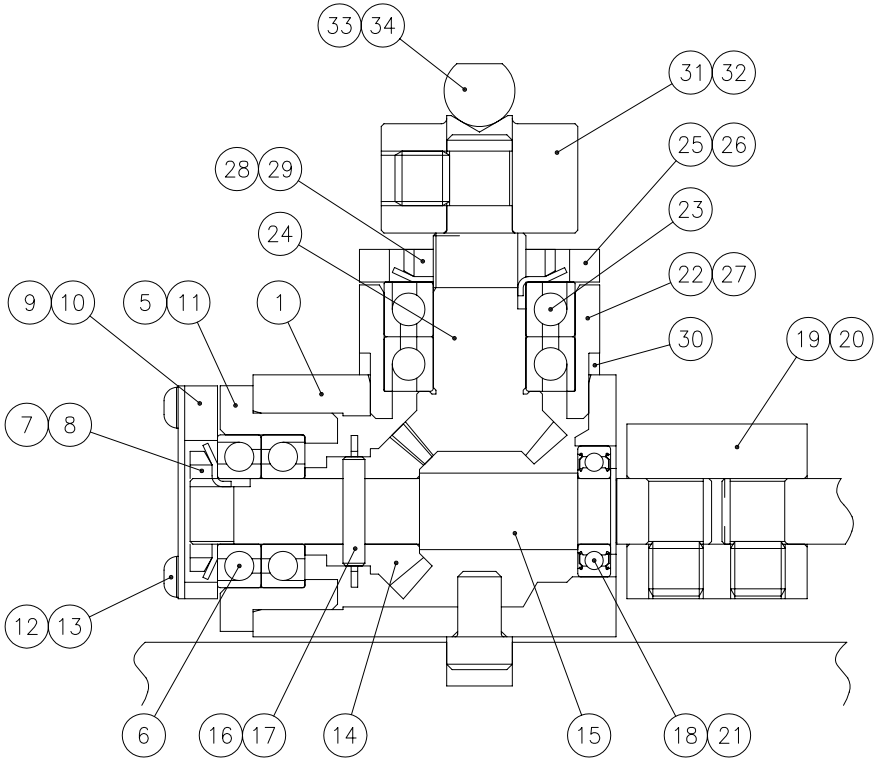

DETAIL A

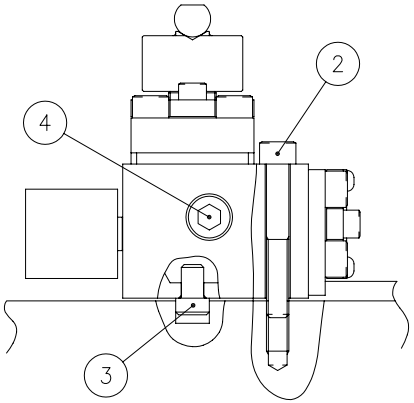

SECTION B–B

6813105C

Index	Code	Parts Name	Drawing No.	Type	Maker	Q'ty	Note
1	74570145	Gear Box (U)	6813132 A			1	
2	36325730	Hex Soc Cap Screw	P330230013	M8X55		2	
3	74387045	Locating Pin	6575844 A			1	
4	74722925	Plug For Piping	P580208003	GM-3/8	GOSHO Works	1	
5	74570147	Unit Case	6813125 A			1	
6	74571425	Complex Bearing	P404027113	7001ATYNDBMP5	NSK	1	
7	74379681	Lock Nut	P406034002	AN01	NTN	1	
8	74379682	Lock Washer	P406044003	AW01	NTN	1	
9	74570149	Bearing Retainer (C)	6813126			1	
10	79565201	Hex Soc Cap Screw	P330220004	M6X12		2	
11	79566121	Hex Soc Cap Screw	P330230007	M8X25		4	
12	74384569	Cap	6575853 A			1	
13	74183304	Button Head Screw	P334500004	M4X8		2	
14	74382681	Driven Bevel Gear	6575847			1	
15	74570150	Driven Shaft	6813127 A			1	
16	31172622	Parallel Pin	P337020018	A-4X20		1	
17	74379683	Locating Snap Ring	P406108103	STW-23	OCHIAI	1	
18	74571426	Deep Groove Ball Bearing	P400010689	6901ZZ	NSK(equality)	1	
19	74384567	Coupling	6501941 B			1	

Index	Code	Parts Name	Drawing No.	Type	Maker	Q'ty	Note
20	74570151	Socket Set Screw	P330550180	M10X8(Knurled cup-end)		4	
21	36518407	Locating Snap Ring	P406108035	STW-12	OCHIAI	1	
22	74570152	Point Case	6813128 A			1	
23	74566463	Ball Bearing Set	7830603	EPBA17-4DBCP10	NSK	1	
24	74382675	Drive Bevel Gear (U)	6502914 A			1	
25	74382684	Bearing Retainer (D)	6575851 A			1	
26	79565201	Hex Soc Cap Screw	P330220004	M6X12		2	
27	10443022	Hex Soc Cap Screw	P330230009	M8X35		4	
28	31182005	Lock Nut	P406030002	AN-03		1	
29	31182004	Lock Washer	P406040002	AW-03		1	
30	74570153	Gear Adjusting Collar (2)	6502917 B			2	
31	74566464	Pin Retainer (U)	6501945 B			1	
32	74570151	Socket Set Screw	P330550180	M10X8(Knurled cup-end)		2	
33	74379617	Driven Pin	6501944 B			1	
34	79572402	Hex Soc Cap Screw	P330210009	M5X20		2	

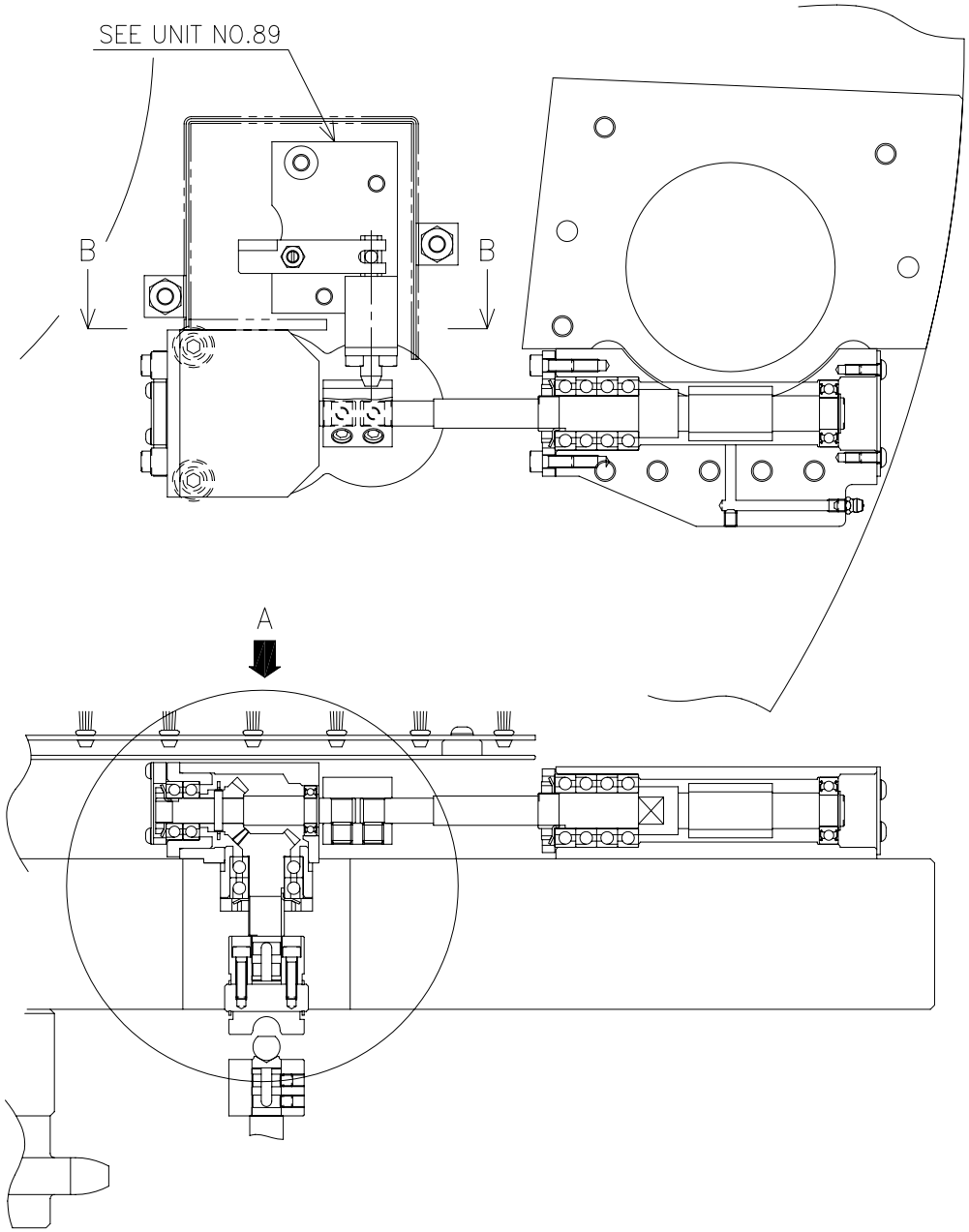

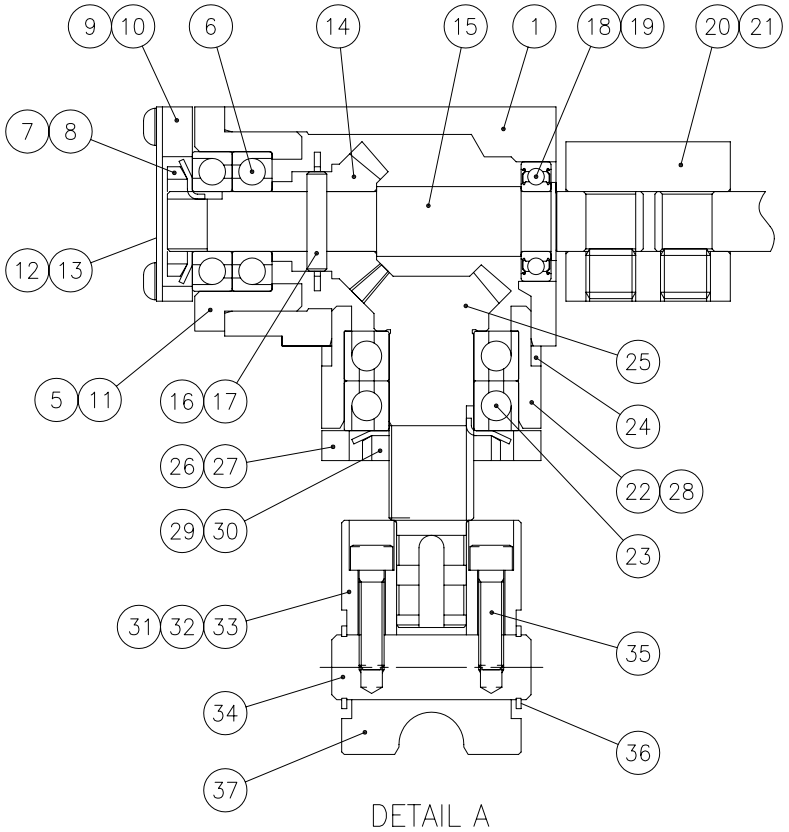

DETAIL A

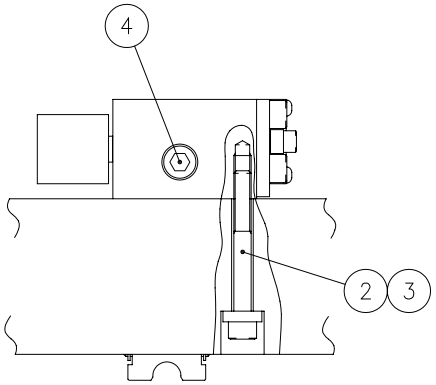

SECTION B–B

6813106C

Index	Code	Parts Name	Drawing No.	Type	Maker	Q'ty	Note
1	74570158	Gear Box (L)	6813124 B			1	
2	36326825	Hex Soc Cap Screw	P330230016	M8X70		2	
3	74314204	Washer (M8)	0827367			2	
4	74722925	Plug For Piping	P580208003	GM-3/8	GOSHO Works	1	
5	74570147	Unit Case	6813125 A			1	
6	74571425	Complex Bearing	P404027113	7001ATYNDBMP5	NSK	1	
7	74379681	Lock Nut	P406034002	AN01	NTN	1	
8	74379682	Lock Washer	P406044003	AW01	NTN	1	
9	74570149	Bearing Retainer (C)	6813126			1	
10	79565201	Hex Soc Cap Screw	P330220004	M6X12		2	
11	79566121	Hex Soc Cap Screw	P330230007	M8X25		4	
12	74384569	Cap	6575853 A			1	
13	74183304	Button Head Screw	P334500004	M4X8		2	
14	74382681	Driven Bevel Gear	6575847			1	
15	74570150	Driven Shaft	6813127 A			1	
16	31172622	Parallel Pin	P337020018	A-4X20		1	
17	74379683	Locating Snap Ring	P406108103	STW-23	OCHIAI	1	
18	74571426	Deep Groove Ball Bearing	P400010689	6901ZZ	NSK(equality)	1	
19	36518407	Locating Snap Ring	P406108035	STW-12	OCHIAI	1	

Index	Code	Parts Name	Drawing No.	Type	Maker	Q'ty	Note
20	74384567	Coupling	6501941 B			1	
21	74570151	Socket Set Screw	P330550180	M10X8(Knurled cup-end)		4	
22	74570152	Point Case	6813128 A			1	
23	74566463	Ball Bearing Set	7830603	EPBA17-4DBCP10	NSK	1	
24	74570153	Gear Adjusting Collar (2)	6502917 B			2	
25	74570159	Drive Bevel Gear (L)	6813130			1	
26	74382684	Bearing Retainer (D)	6575851 A			1	
27	79565201	Hex Soc Cap Screw	P330220004	M6X12		2	
28	10443022	Hex Soc Cap Screw	P330230009	M8X35		4	
29	31182005	Lock Nut	P406030002	AN-03		1	
30	31182004	Lock Washer	P406040002	AW-03		1	
31	74570160	Point D	7401762 C			1	
32	74534623	Socket Set Screw	P330603005	M6X6(Knurled cup-end)	SPS/UNBRAKO	2	
33	74571414	Parallel Key (5X5X16)	6811101 A			1	
34	74350701	Pin	0812100			1	
35	79572402	Hex Soc Cap Screw	P330210009	M5X20		2	
36	74515614	Locating Snap Ring	P406108036	STW-13	OCHIAI	2	
37	74379584	Clamp Shaft	6501943 B			1	

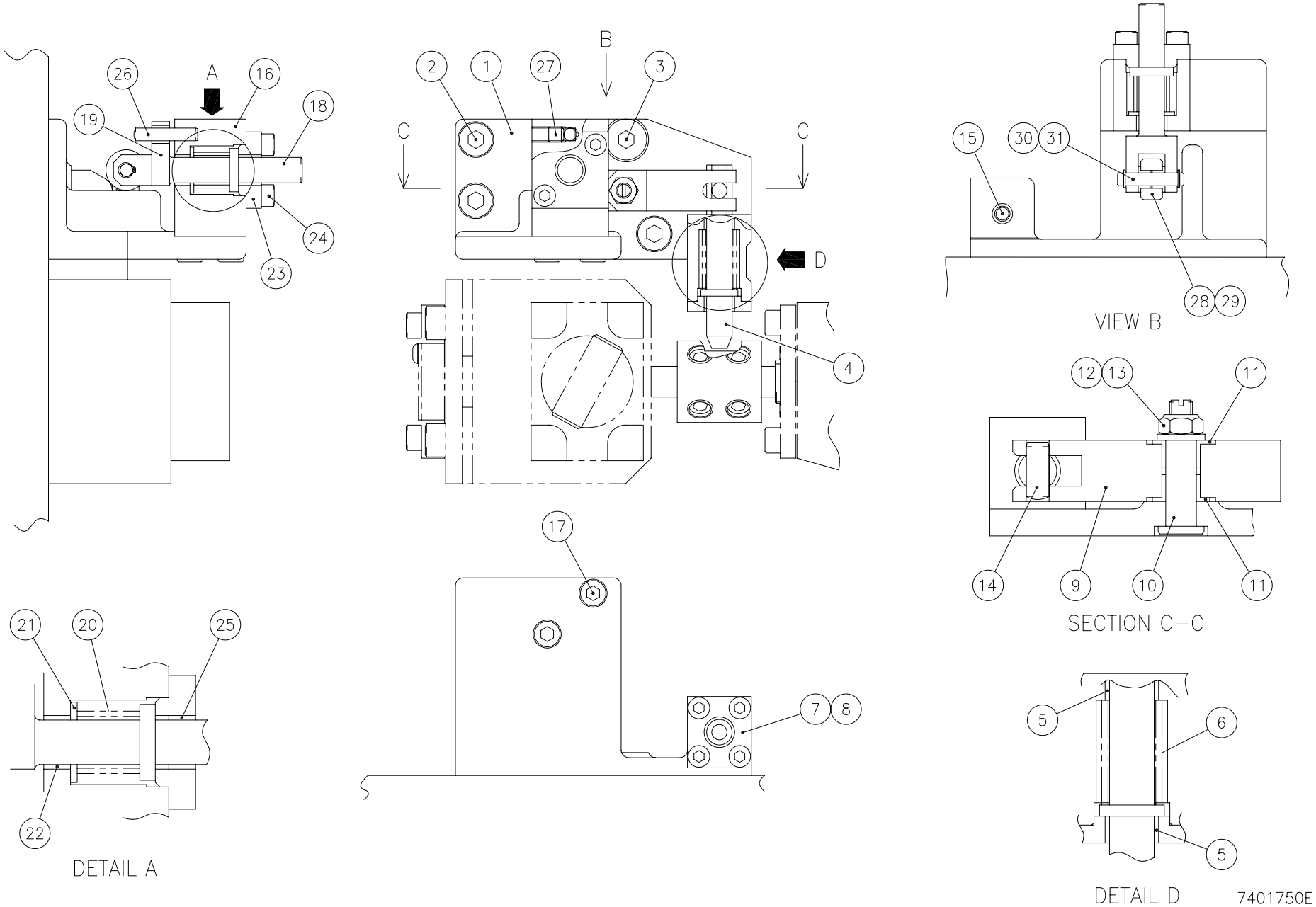
A
B
C
C
D
26
16
18
19
24
23
2
1
27
3
4
15
30
31
28
29
VIEW B
12
13
11
14
9
10
11
SECTION C–C
17
7
8
21
20
25
22
DETAIL A
5
6
5
DETAIL D
7401750E

Index	Code	Parts Name	Drawing No.	Type	Maker	Q'ty	Note
1	74561489	Brake Bracket (U)	7401751 B			1	
2	79564804	Hex Soc Cap Screw	P330230006	M8X20		3	
3	74379699	Shoulder Bolt	P338134004	MSB10-20	MISUMI	1	
4	74566465	Brake Pin	6501983 A			1	
5	74570154	Plain Bearing	P407003201	DUB1006	DAIDO METAL	2	
6	74379687	Brake Spring (1)	6501985			1	
7	74379686	Cap	6501984			1	
8	79567721	Hex Soc Cap Screw	P330210004	M5X12		4	
9	74562624	Lever	6501986 D			1	
10	74379689	Pin (1)	6501987 A			1	
11	74570155	Plain Bearing	P407013039	DUF0806-15	DAIDO METAL	2	
12	74722750	Lock Nut	P332505003	M6X1.0(Type-2)-SS400	FUJI SEIMITSU	1	
13	79565419	Washer	P336000005	6(Regular Round)		1	
14	74387845	Parallel Pin	P337020270	A-6X15		1	
15	36147504	Socket Set Screw	P330550024	M6X6(Flat-end)		1	
16	74387610	Brake Case (U)	7401752			1	
17	79565201	Hex Soc Cap Screw	P330220004	M6X12		2	
18	74379691	Brake Rod U (1)	6501989			1	
19	74572383	Brake Rod U (2)	7401753 B			1	

Index	Code	Parts Name	Drawing No.	Type	Maker	Q'ty	Note
20	74379693	Brake Spring (2)	6501991			1	
21	74570156	Plain Bearing	P407023021	DUT08	DAIDO METAL	1	
22	74570154	Plain Bearing	P407003201	DUB1006	DAIDO METAL	1	
23	74379695	Cap (U)	6501993			1	
24	79567721	Hex Soc Cap Screw	P330210004	M5X12		2	
25	31181503	Plain Bearing	P407003096	MB1006DU	DAIDO METAL	1	
26	36383955	Parallel Pin	P337020273	A-5X25		1	
27	36147504	Socket Set Screw	P330550024	M6X6(Flat-end)		1	
28	74562625	Roller	6501998 A			1	
29	74570157	Plain Bearing	P407013073	DUF0504-10	DAIDO METAL	2	
30	74382716	Pin (2)	6501992 A			1	
31	10560468	Locating Snap Ring	P406108078	ETW-4	OCHIAI	2	

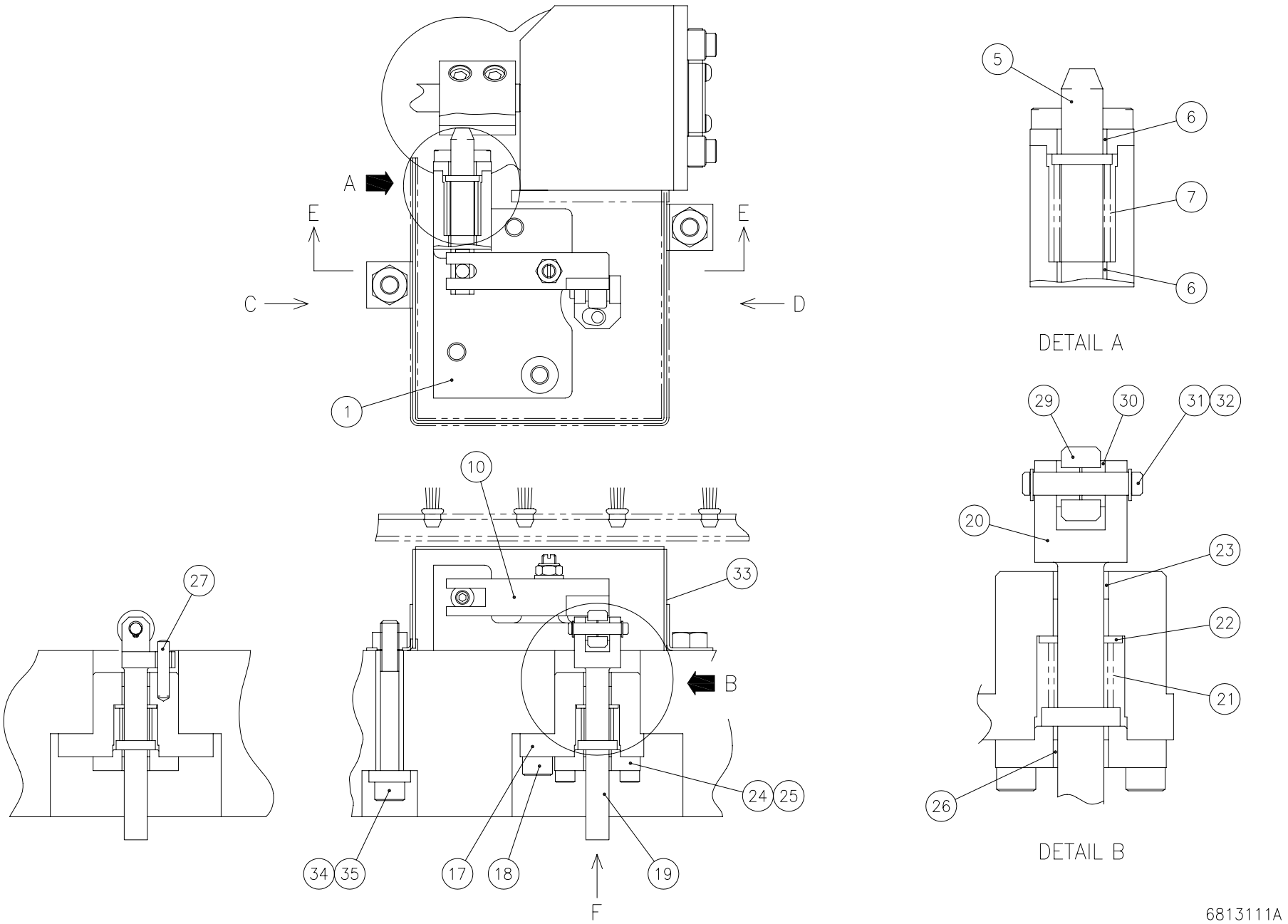
A
E
E
C
D
1
5
6
7
6
DETAIL A
29
30
31
32
20
23
22
21
26
DETAIL B
10
33
27
B
24
25
34
35
17
18
19
F
6813111A

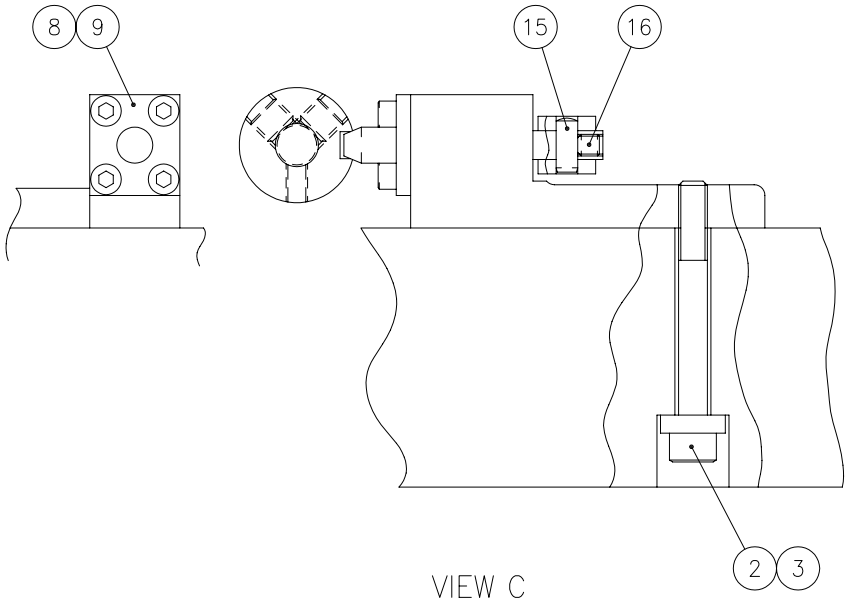

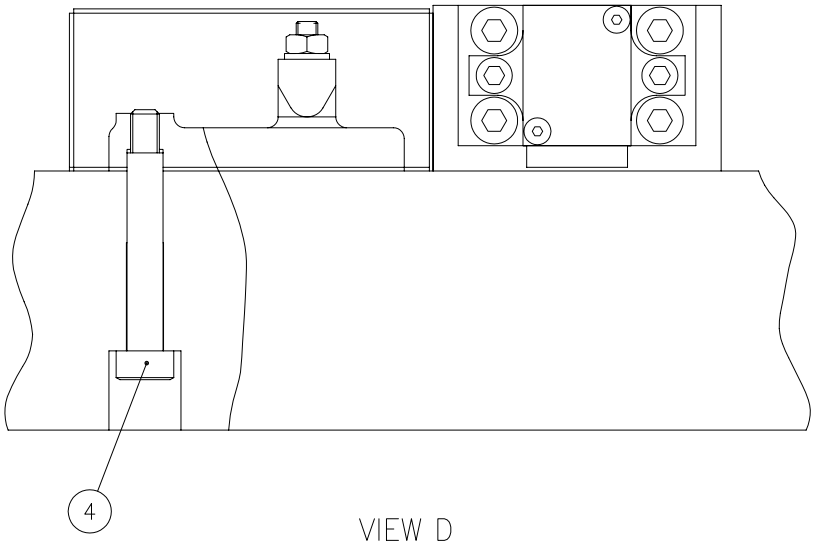

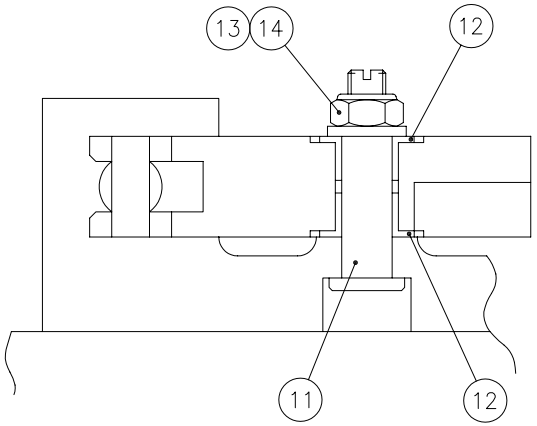

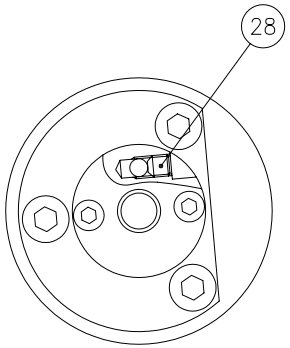

6813111A

Index	Code	Parts Name	Drawing No.	Type	Maker	Q'ty	Note
1	74561490	Brake Bracket (L)	7401771 B			1	
2	36326825	Hex Soc Cap Screw	P330230016	M8X70		2	
3	74314204	Washer (M8)	0827367			2	
4	74379720	Shoulder Bolt	P338134007	MSB10-55	MISUMI	1	
5	74566465	Brake Pin	6501983 A			1	
6	74570154	Plain Bearing	P407003201	DUB1006	DAIDO METAL	2	
7	74379687	Brake Spring (1)	6501985			1	
8	74379686	Cap	6501984			1	
9	79567721	Hex Soc Cap Screw	P330210004	M5X12		4	
10	74562624	Lever	6501986 D			1	
11	74379689	Pin (1)	6501987 A			1	
12	74570155	Plain Bearing	P407013039	DUF0806-15	DAIDO METAL	2	
13	79565419	Washer	P336000005	6(Regular Round)		1	
14	74722750	Lock Nut	P332505003	M6X1.0(Type-2)-SS400	FUJI SEIMITSU	1	
15	74387845	Parallel Pin	P337020270	A-6X15		1	
16	74534623	Socket Set Screw	P330603005	M6X6(Knurled cup-end)	SPS/UNBRAKO	1	
17	74387616	Brake Case (L)	7401772			1	
18	79566121	Hex Soc Cap Screw	P330230007	M8X25		3	
19	74570162	Brake Rod L (1)	6813133			1	

Index	Code	Parts Name	Drawing No.	Type	Maker	Q'ty	Note
20	74578345	Brake Rod L (2)	7401773 A			1	
21	74379693	Brake Spring (2)	6501991			1	
22	74570156	Plain Bearing	P407023021	DUT08	DAIDO METAL	1	
23	74570154	Plain Bearing	P407003201	DUB1006	DAIDO METAL	1	
24	74379716	Cap (L)	6501997			1	
25	79316109	Hex Soc Cap Screw	P330210006	M5X15		2	
26	74570154	Plain Bearing	P407003201	DUB1006	DAIDO METAL	1	
27	36383955	Parallel Pin	P337020273	A-5X25		1	
28	74534623	Socket Set Screw	P330603005	M6X6(Knurled cup-end)	SPS/UNBRAKO	1	
29	74562625	Roller	6501998 A			1	
30	74570157	Plain Bearing	P407013073	DUF0504-10	DAIDO METAL	2	
31	74382716	Pin (2)	6501992 A			1	
32	10560468	Locating Snap Ring	P406108078	ETW-4	OCHIAI	2	
33	74387618	Scrap Guard	7401774			1	
34	36326825	Hex Soc Cap Screw	P330230016	M8X70		2	
35	74314204	Washer (M8)	0827367			2	

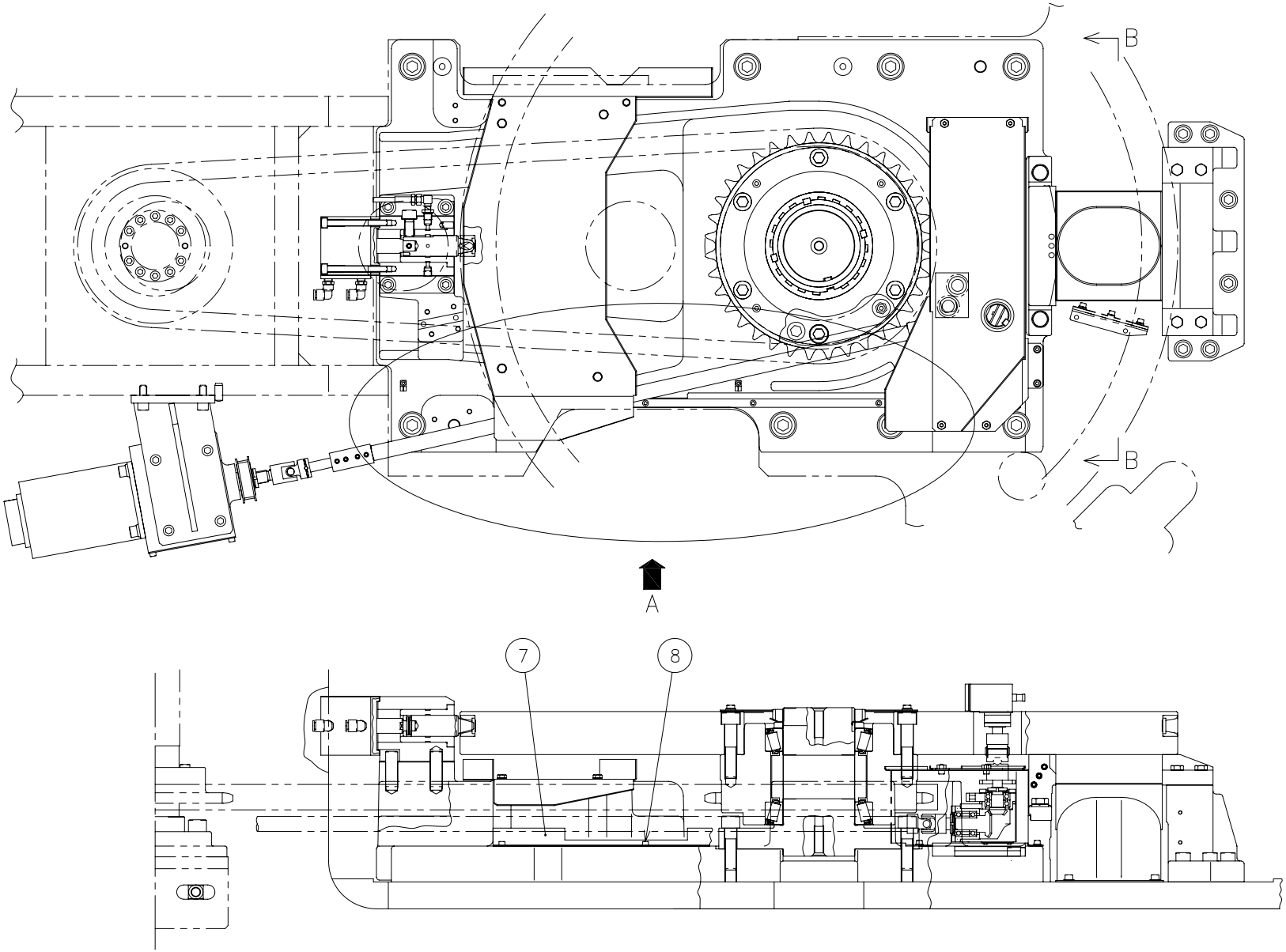

6877110#1
6877110#2

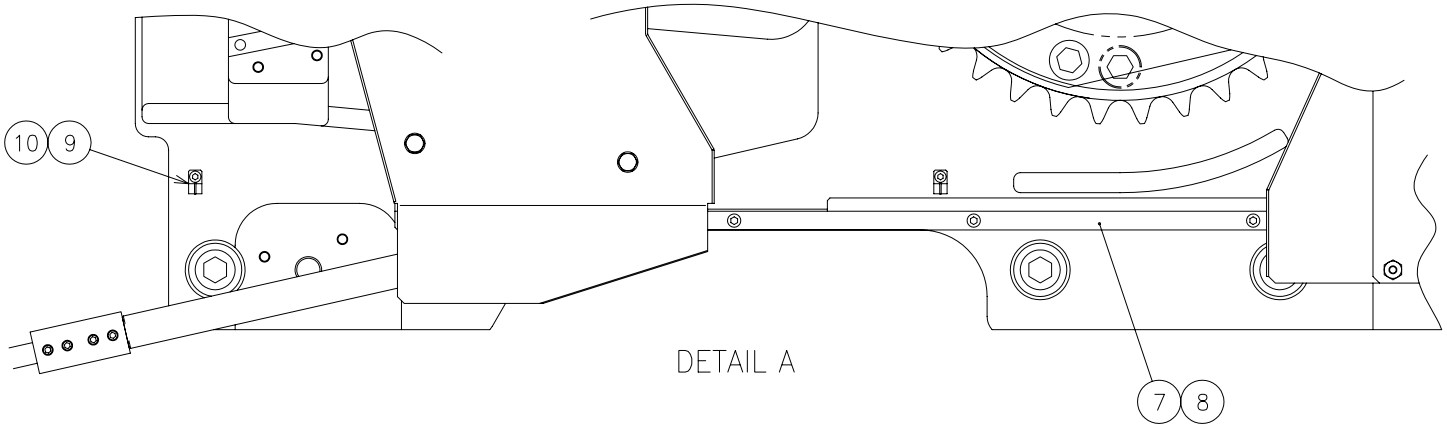

DETAIL A

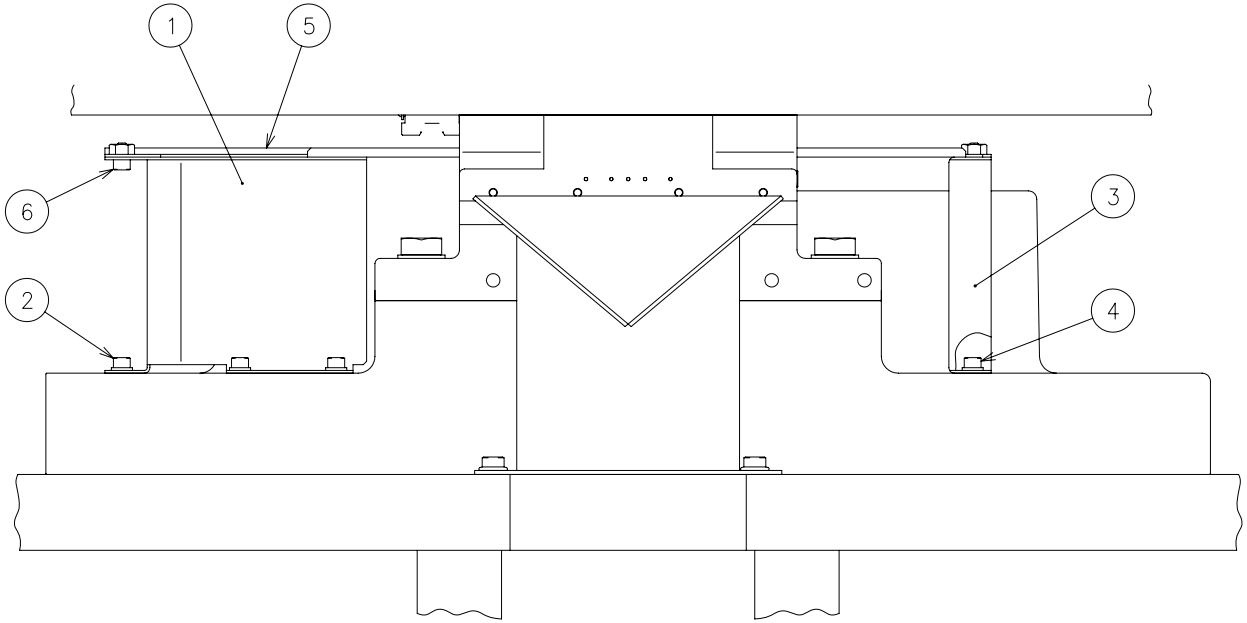

SECTION B–B

6877110#1
6877110#2

Unit No. 90

AI(12) From Serial No.36102001 and after

Index	Code	Parts Name	Drawing No.	Type	Maker	Q'ty	Note
1	74569671	Scrap Guard (1)	6812591 A			1	
2	45252001	Flange Socket Bolt	P330460003	M6X15		3	
3	74569672	Scrap Guard (2)	6812592			1	
4	45252001	Flange Socket Bolt	P330460003	M6X15		2	
5	74571247	Scrap Guard (3)	6811059			1	
6	75428708	Flange Socket Bolt	P330468015	M6X10	NISSAN NEJI	4	
7	74569674	Wiring Cover	6812594 A			1	
8	45252001	Flange Socket Bolt	P330460003	M6X15		4	
9	74563689	Saddle For Conduct	P381017105	PZ0106(D6.2)	DAIWA DENGYO	3	
10	79564305	Hex Soc Cap Screw	P330220006	M6X15		3	

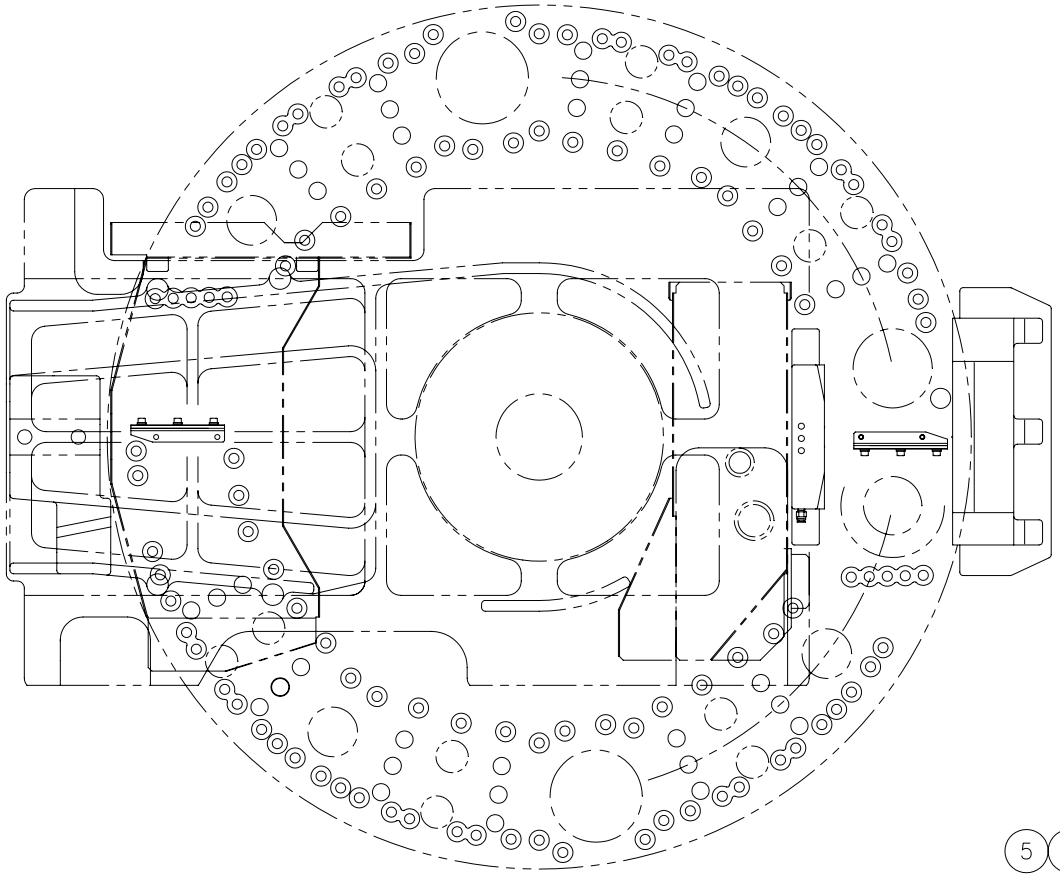

Setting Position

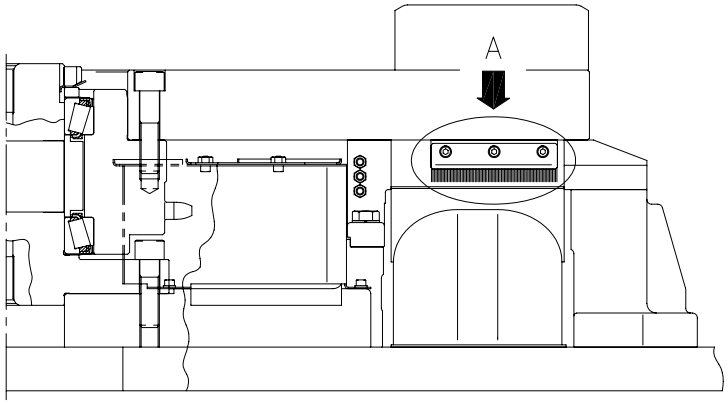

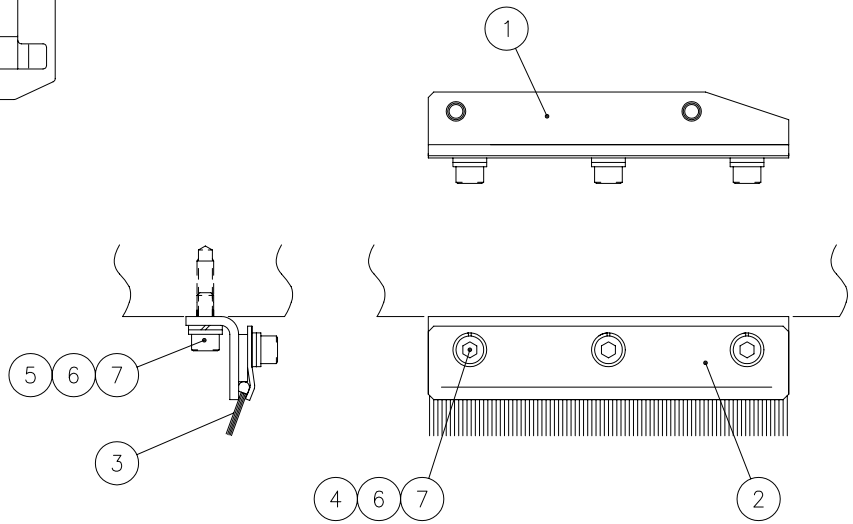

DETAIL A

6813110

Unit No. 91

AI(13) From Serial No.36102001 and after

Index	Code	Parts Name	Drawing No.	Type	Maker	Q'ty	Note
1	74570165	Bracket 1	6813164			2	
2	74562161	Bracket 2	7404322			2	
3	74562162	Brush	7404323			2	
4	31183033	Hex Soc Cap Screw	P330220003	M6X10		6	
5	79564305	Hex Soc Cap Screw	P330220006	M6X15		4	
6	79564311	Spring Washer	P336050005	6		10	
7	79565419	Washer	P336000005	6(Regular Round)		10	

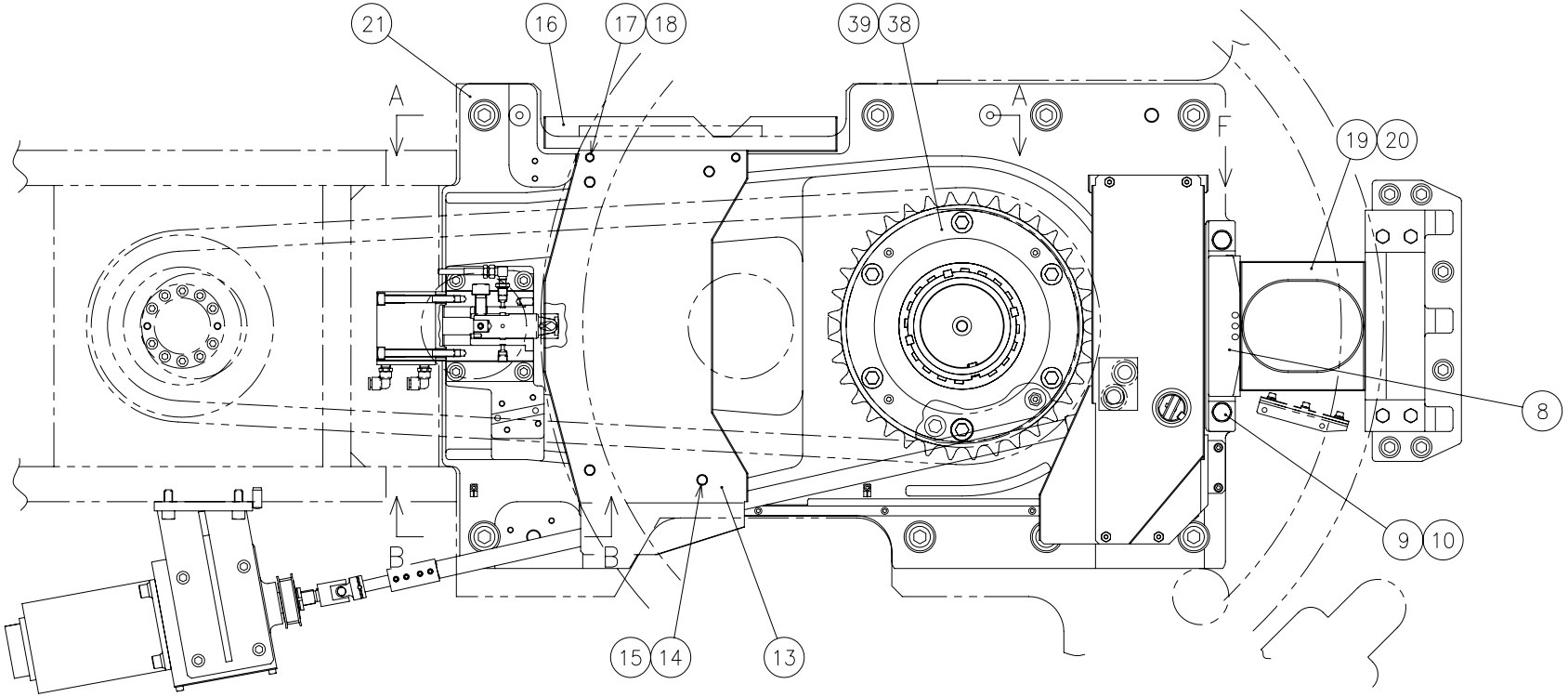

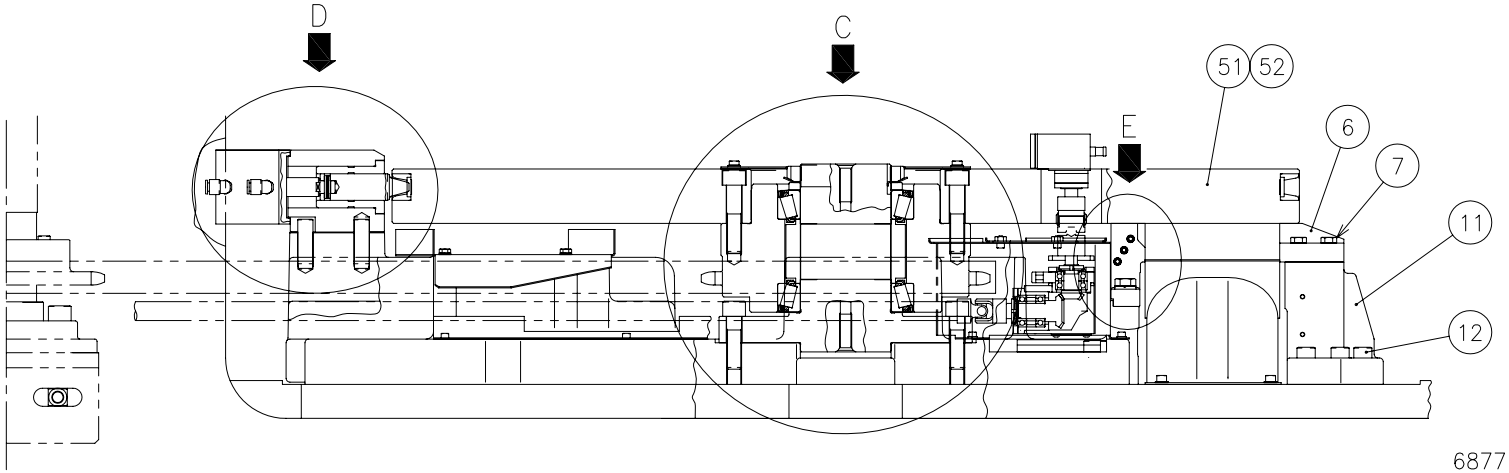

6877110#1
6877110#2

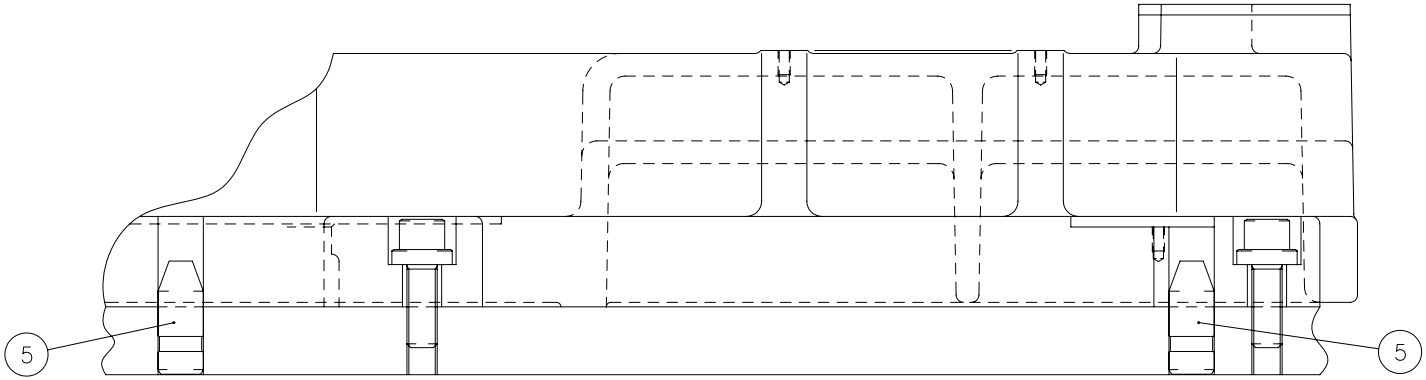

SECTION A–A

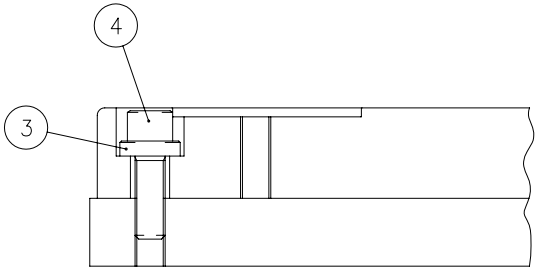

SECTION B–B

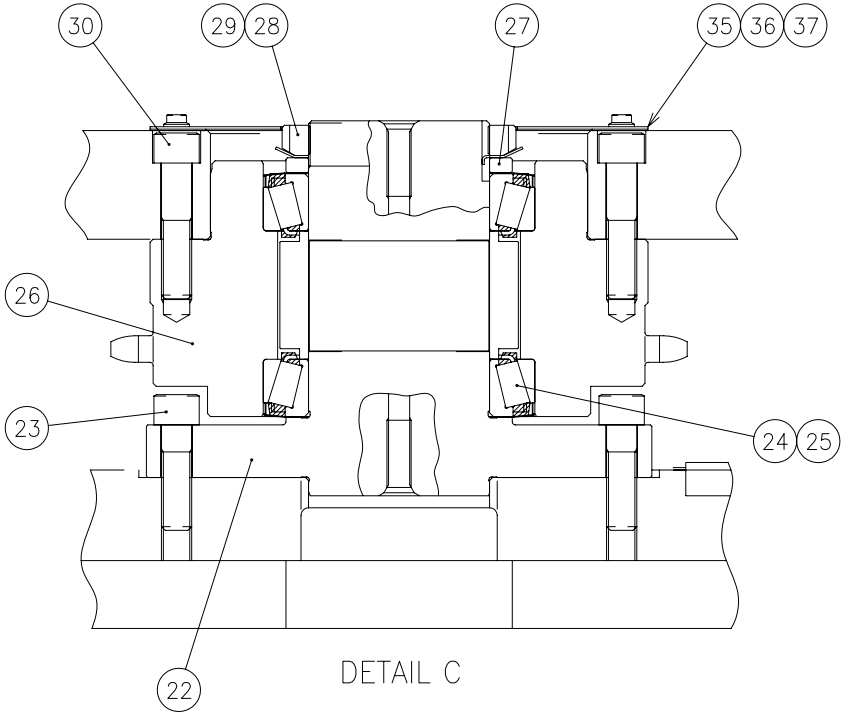

DETAIL C

6877110#1
6877110#2

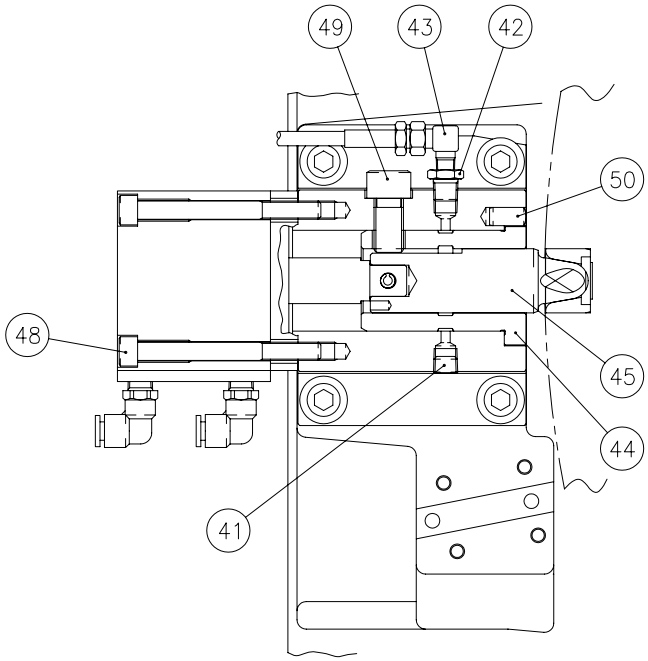

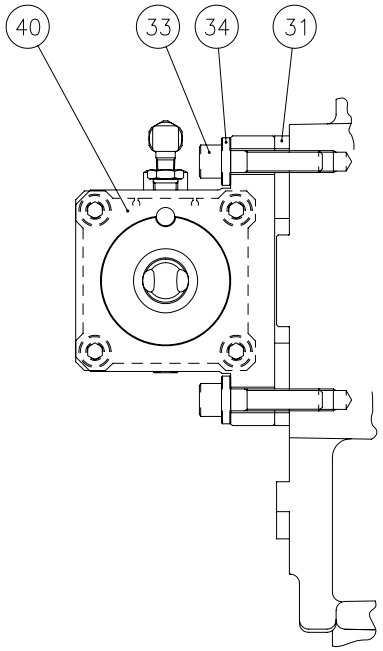

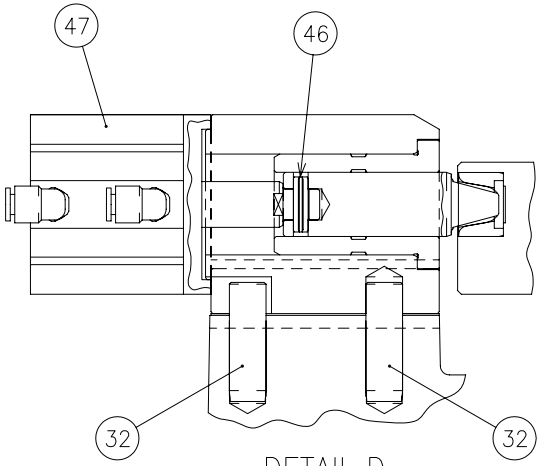

DETAIL D

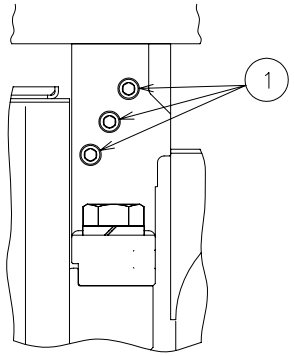

DETAIL E

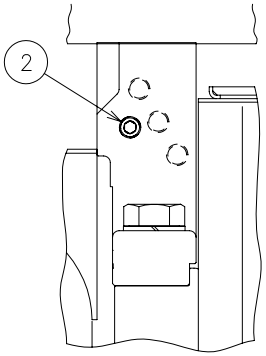

VIEW F

6877110#1
6877110#2

From Serial No.36102001 and after

Index	Code	Parts Name	Drawing No.	Type	Maker	Q'ty	Note
1	74389708	Plug For Piping	P580208034	P10410	GOSHO Works	3	
2	74389708	Plug For Piping	P580208034	P10410	GOSHO Works	1	
3	74301502	Washer	0821009 B			9	
4	71101346	Hex Soc Cap Screw	P330270008	M20X65		9	
5	74417827	Locating Pin	6874275			2	
6	74569665	Disk Support (Front)	6812584			1	
7	36147024	Bolt	P330050007	M12X50		4	
8	74418878	Disk Support (Rear)	6875489			1	
9	74303203	Bolt	P330060022	M16X55		2	
10	79566731	Spring Washer	P336050010	16		2	
11	74569666	Disk Support Block	6812585 B			1	
12	74535204	Hex Soc Cap Screw	P330260037	M16X65		6	
13	74569668	Scrap Receiver	6812588 A			1	
14	79567302	Bolt	P330030004	M8X15		4	
15	86610326	Spring Washer	P336050006	8		4	
16	74569669	Scrap Receiver Wing	6812589 A			1	
17	10442903	Bolt	P330020003	M6X12		2	
18	79564311	Spring Washer	P336050005	6		2	
19	74569670	Disk Support Cover	6812590			1	

Index	Code	Parts Name	Drawing No.	Type	Maker	Q'ty	Note
20	74382078	Flange Socket Bolt	P330468006	M8X15	NISSAN NEJI	4	
21	74418896	Lower Base Assy	6875494			1	
22	74419338	Bearing Shaft (Lower)	6812557			1	
23	71357839	Hex Soc Cap Screw	P330270009	M20X70		6	
24	74569663	Roller Bearing Set	7830623 A	HR32024XJL11DB	NSK	1	
25	74303127	Shield Plate	P406188005	32024XAV	FUKUDA	2	
26	74419339	Bearing Housing (Lower)	6812558			1	
27	74379119	Collar	6530298			1	
28	74563668	Crown Nut	0811674 A			1	
29	74303123	Lock Washer	P406040019	AW-24		1	
30	74722722	Hex Soc Cap Screw	P330270011	M20X80		6	
31	74577424	Spacer	6812556			2	
32	74389710	Parallel Pin	P337055079	DPS-A20-65	OKITA	2	
33	74304914	Hex Soc Cap Screw	P330250010	M12X55		4	
34	74303703	Washer (M12)	0827014 B			4	
35	74569675	Bearing Cover	6812595			1	
36	74569676	Cover Seal	6812596			1	
37	74382078	Flange Socket Bolt	P330468006	M8X15	NISSAN NEJI	4	
38	74386826	Driven Sprocket	6593831			1	

Index	Code	Parts Name	Drawing No.	Type	Maker	Q'ty	Note
39	36322123	Hex Soc Cap Screw	P330270004	M20X45		6	
40	74569659	Index Pin Housing	6812587 A			1	
41	74389708	Plug For Piping	P580208034	P10410	GOSHO Works	1	
42	74722884	Bush For Piping	P580013001	M-1/4X1/8	BAN SS	1	
43	74722994	Hose Adapter	P589223029	8021RG02	BRIDGESTON	1	
44	74379122	Index Pin Bushing	6530302			1	
45	74379123	Index Pin	6530303 B			1	
46	74722785	Spring Pin	P337030080	8X30		1	
47	74417845	Air Cylinder (Compact Type)	7831566	CDQ2B80-30-DCH5905H	SMC	1	
48	74381569	Hex Soc Cap Screw	P330240022	M10X100		4	
49	74389709	Bolt	6572869 A			1	
50	75428631	Parallel Pin	P337020056	A-10X20		1	
51	74419340	70ST Lower Turret Disk	6877113			1	2AI
51	74419341	58ST Lower Turret Disk	6877142			1	4AI
52	74302104	Bushing	0480336 K			34	2AI
52	74302104	Bushing	0480336 K			30	4AI

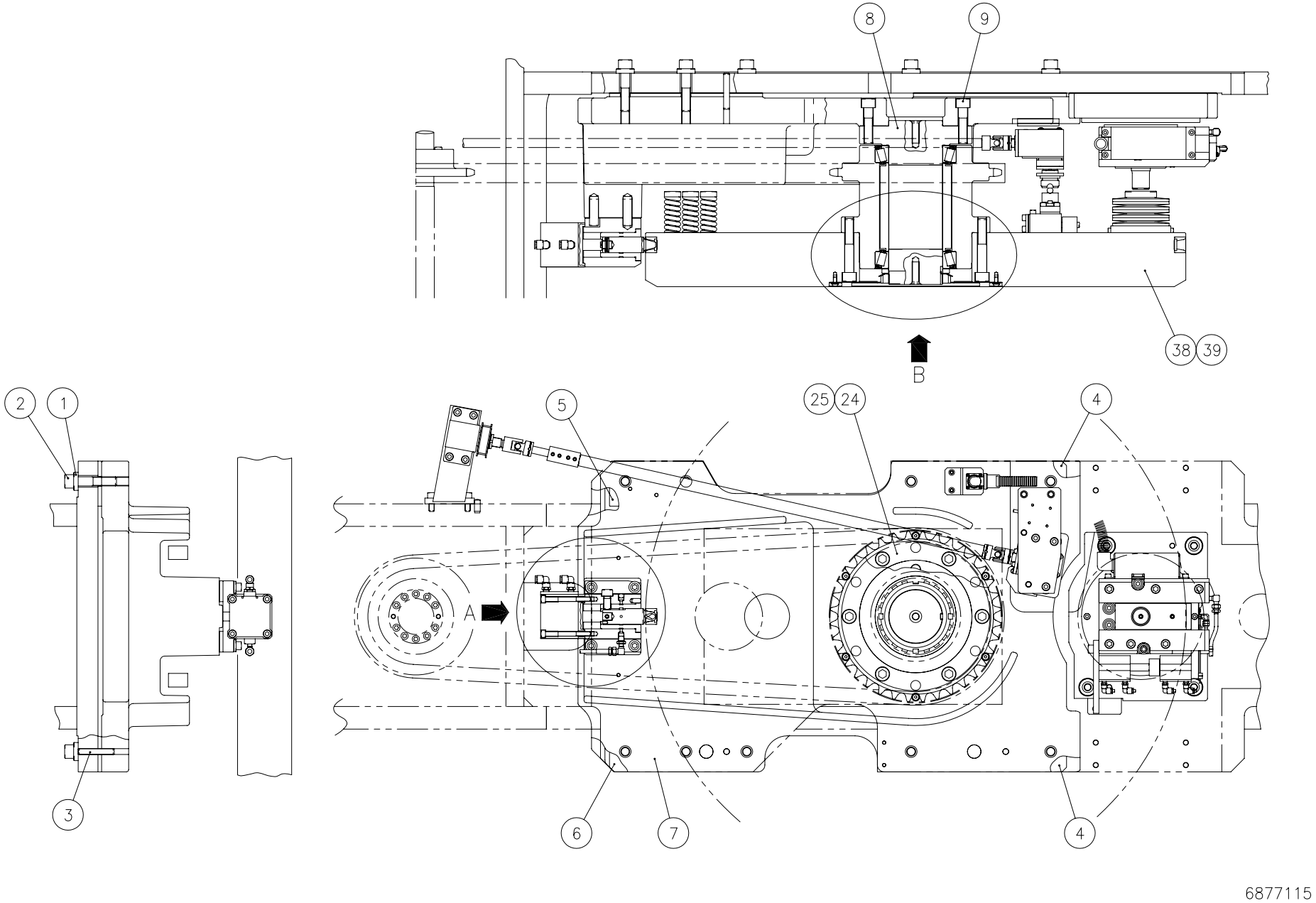
8
9
38
39
B
2
1
5
25
24
4
A
3
6
7
4
6877115

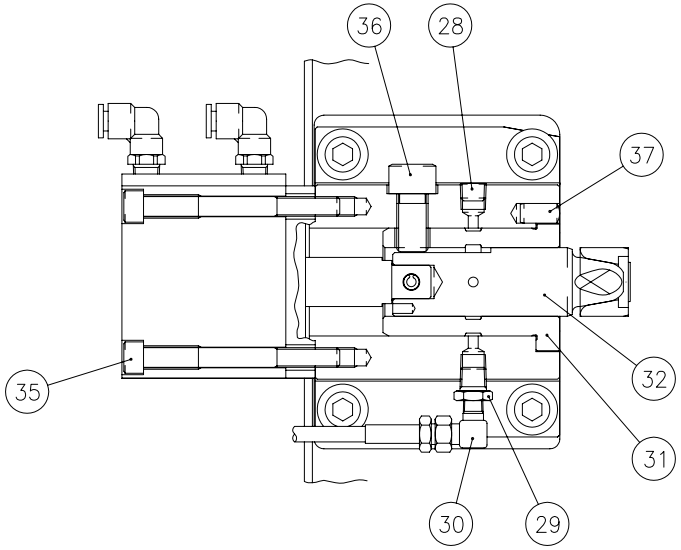

DETAIL A

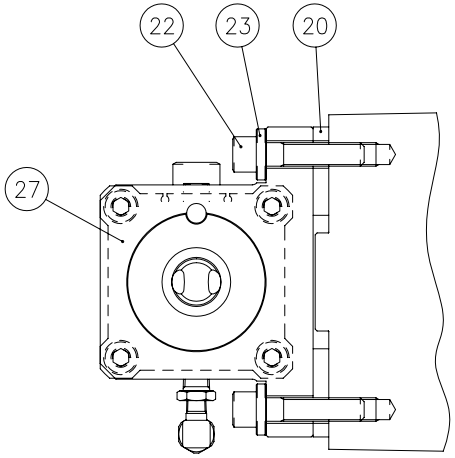

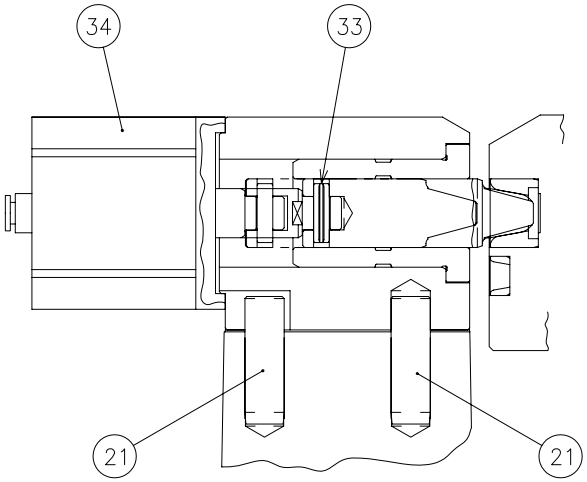

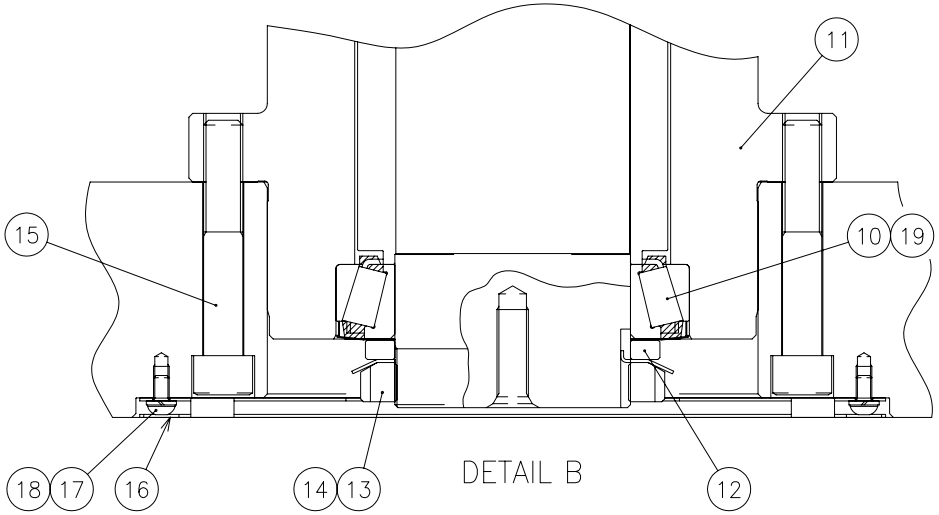

DETAIL B

6877115

Unit No. 93

Turret B(2)

From Serial No.36102001 and after

Index	Code	Parts Name	Drawing No.	Type	Maker	Q'ty	Note
1	74301502	Washer	0821009 B			9	
2	36618103	Hex Soc Cap Screw	P330270013	M20X90		9	
3	74415408	Parallel Pin	P337054103	MSTM13-80	MISUMI	2	
4	74569654	Spacer (A)	6812554			2	
5	74569655	Spacer (B)	6812555			1	
6	74419342	Spacer (C)	6877116			1	
7	74419343	Upper Base Assy	6877119			1	
8	74569656	Bearing Shaft (Upper)	6812552 A			1	
9	74722722	Hex Soc Cap Screw	P330270011	M20X80		8	
10	74569657	Roller Bearing Set	7830622 A	HR32024XJL11DB	NSK	1	
11	74379117	Bearing Housing (Upper)	6530296			1	
12	74379119	Collar	6530298			1	
13	74563668	Crown Nut	0811674 A			1	
14	74303123	Lock Washer	P406040019	AW-24		1	
15	31172405	Hex Soc Cap Screw	P330270017	M20X120		6	
16	74379120	Cap	6530299 A			1	
17	10569021	Button Head Screw	P334500019	M8X15		6	
18	86610326	Spring Washer	P336050006	8		6	
19	74303127	Shield Plate	P406188005	32024XAV	FUKUDA	2	

Index	Code	Parts Name	Drawing No.	Type	Maker	Q'ty	Note
20	74577424	Spacer	6812556			2	
21	74389710	Parallel Pin	P337055079	DPS-A20-65	OKITA	2	
22	74304914	Hex Soc Cap Screw	P330250010	M12X55		4	
23	74303703	Washer (M12)	0827014 B			4	
24	74386826	Driven Sprocket	6593831			1	
25	36322123	Hex Soc Cap Screw	P330270004	M20X45		6	
26	74702340	Plug For Piping	P580208001	GM-1/8	GOSHO Works	1	List Only
27	74569659	Index Pin Housing	6812587 A			1	
28	74389708	Plug For Piping	P580208034	P10410	GOSHO Works	1	
29	74722884	Bush For Piping	P580013001	M-1/4X1/8	BAN SS	1	
30	74722994	Hose Adapter	P589223029	8021RG02	BRIDGESTON	1	
31	74379122	Index Pin Bushing	6530302			1	
32	74379123	Index Pin	6530303 B			1	
33	74722785	Spring Pin	P337030080	8X30		1	
34	74417845	Air Cylinder (Compact Type)	7831566	CDQ2B80-30-DCH5905H	SMC	1	
35	74381569	Hex Soc Cap Screw	P330240022	M10X100		4	
36	74389709	Bolt	6572869 A			1	
37	75428631	Parallel Pin	P337020056	A-10X20		1	
38	74575626	70ST Upper Turret Disk	6811080			1	2AI

Unit No. 93

Turret B(2)

From Serial No.36102001 and after

Index	Code	Parts Name	Drawing No.	Type	Maker	Q'ty	Note
38	74571410	58ST Upper Turret Disk	6811082 A			1	4AI
39	74302104	Bushing	0480336 K			34	2AI
39	74302104	Bushing	0480336 K			30	4AI

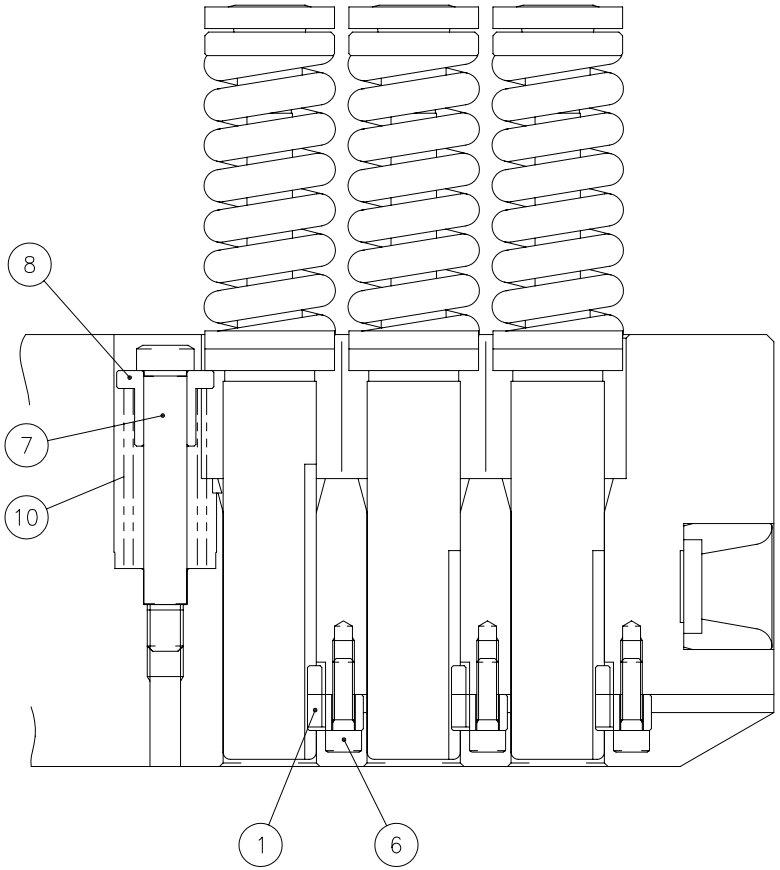

<1/2">

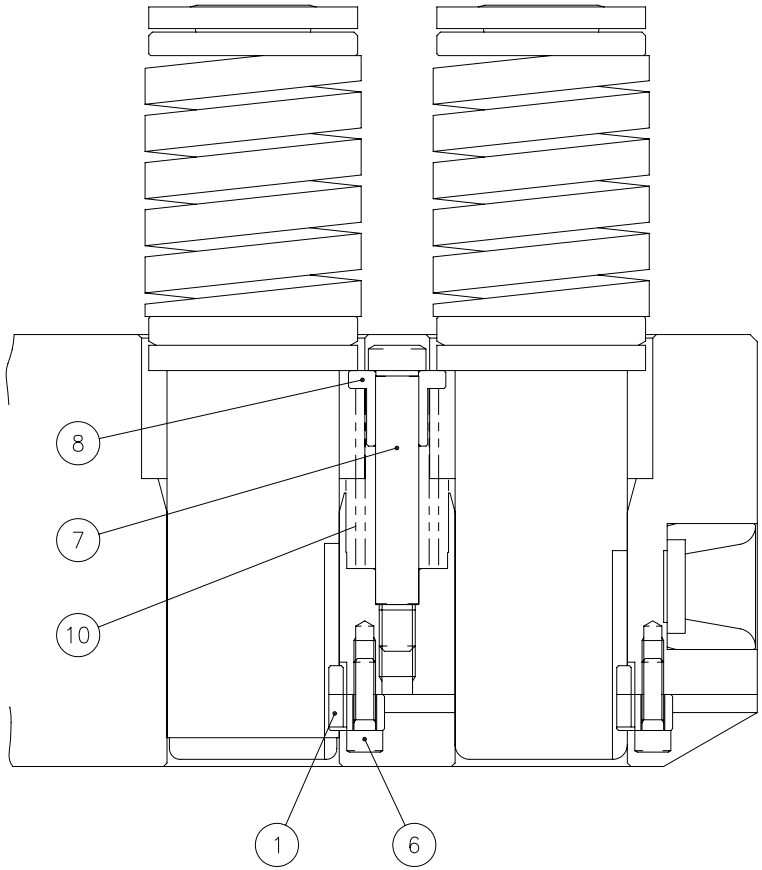

<1−1/4">

6812836
6812837

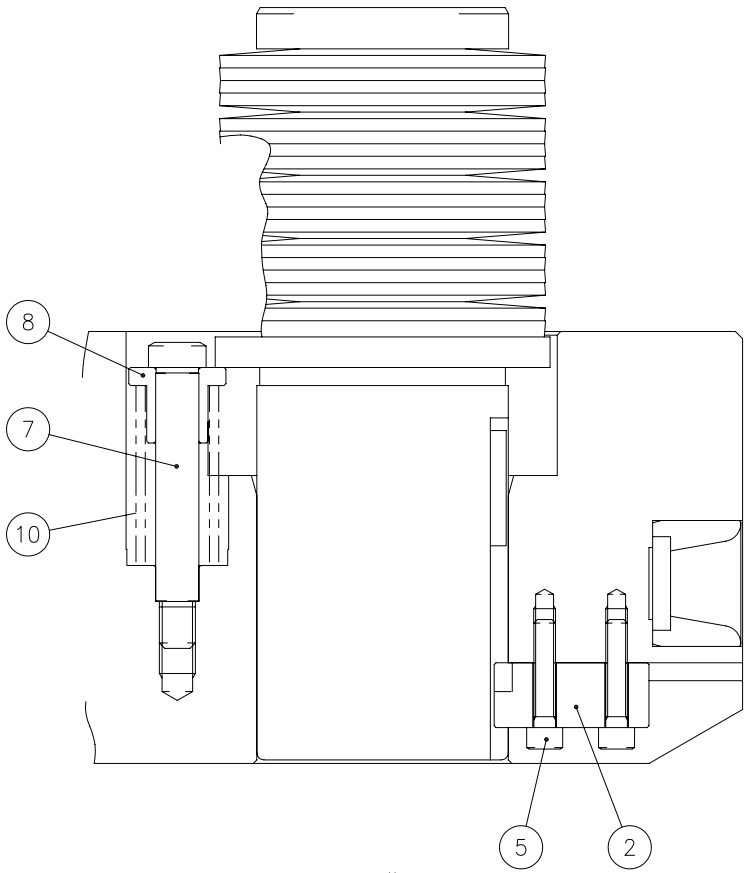

<2">

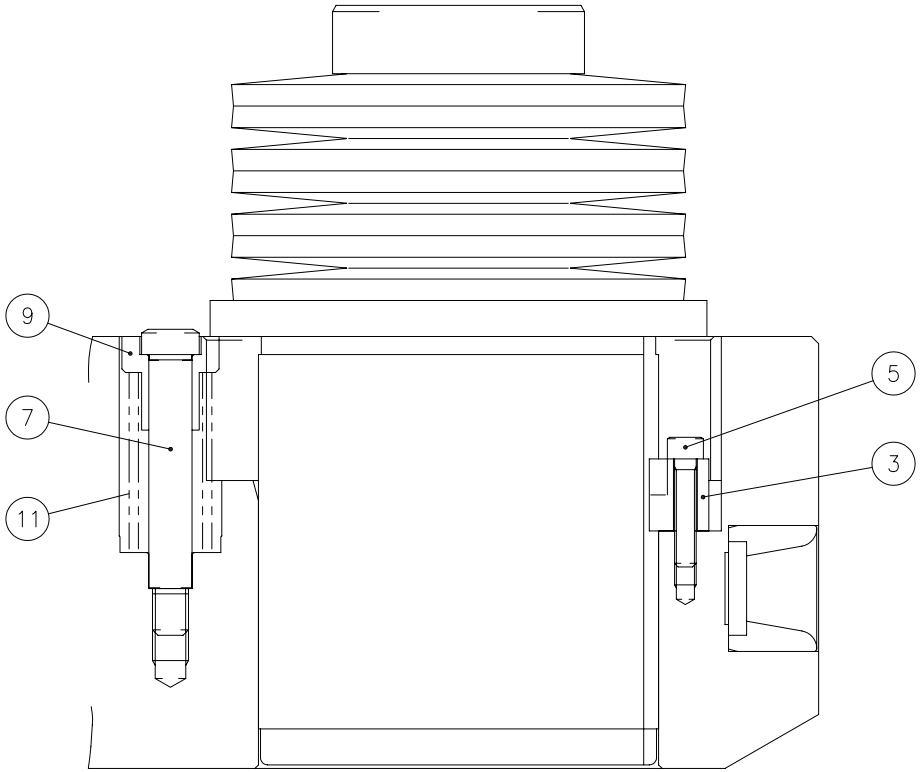

<3-1/2">

6812834
6812835

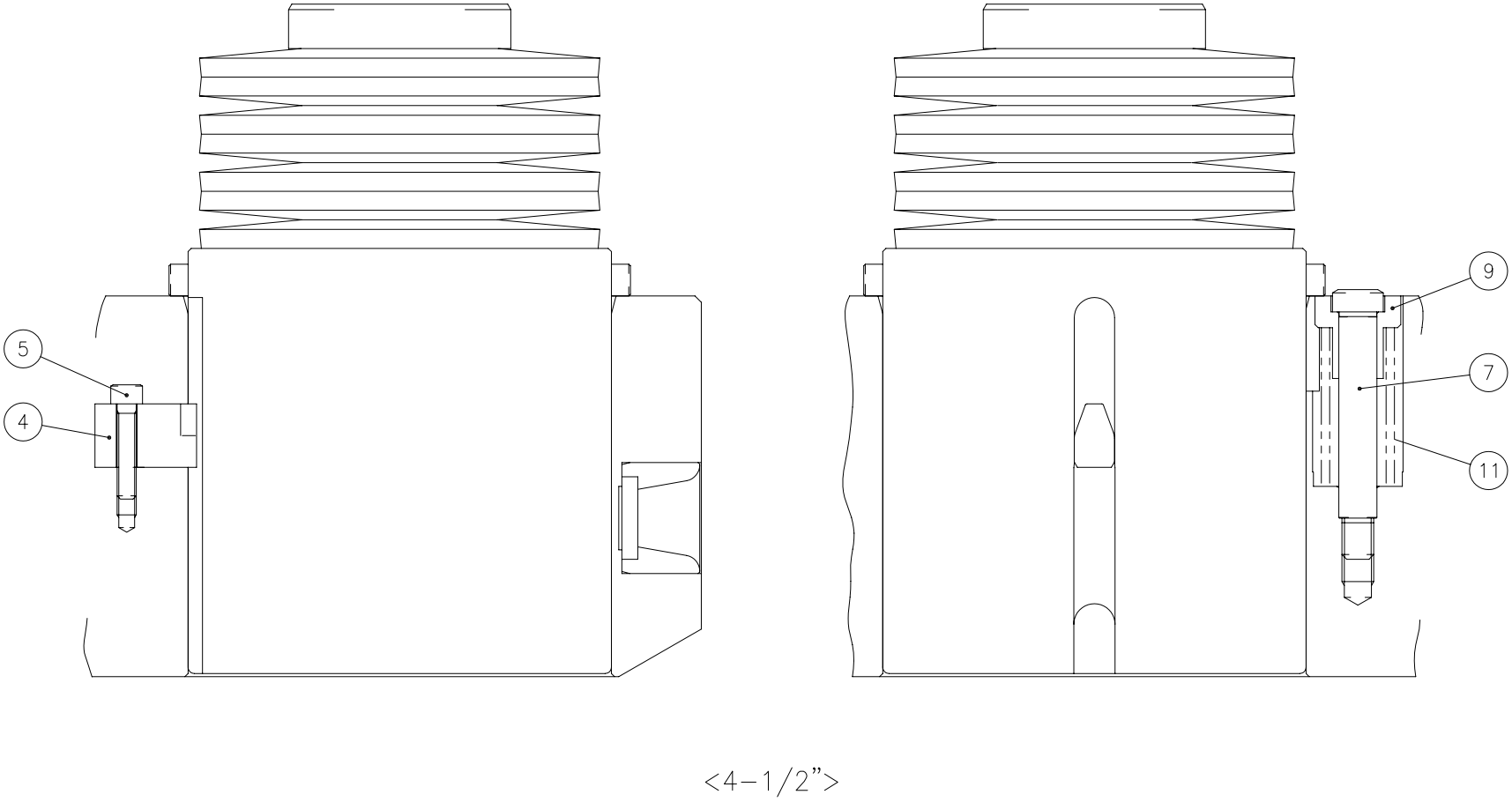

6812833

Index	Code	Parts Name	Drawing No.	Type	Maker	Q'ty	Note
1	74569848	1/2" Guide Key	3008133			48	2AI
1	74569848	1/2" Guide Key	3008133			40	4AI
2	74569850	2" Guide Key	6812864			4	
3	74569852	3-1/2" Guide Key	6812865			2	
4	74561406	4-1/2" Guide Key	7400914 B			2	2AI
5	86213043	Hex Soc Cap Screw	P330220012	M6X30		12	2AI
5	86213043	Hex Soc Cap Screw	P330220012	M6X30		10	4AI
6	79567722	Hex Soc Cap Screw	P330220009	M6X20		48	2AI
6	79567722	Hex Soc Cap Screw	P330220009	M6X20		40	4AI
7	74569846	Shoulder Screw	3204978			118	2AI
7	74569846	Shoulder Screw	3204978			96	4AI
8	74306004	Lifter Collar	5500217 B			102	2AI
8	74306004	Lifter Collar	5500217 B			88	4AI
9	74306014	Lifter Ring	5501009 C			16	2AI
9	74306014	Lifter Ring	5501009 C			8	4AI
10	74569847	Spring (1/2",1-1/4",2")	3200854			90	2AI
10	74569847	Spring (1/2",1-1/4",2")	3200854			79	4AI
11	74569851	Spring (3-1/2",4-1/2")	3204979 A			28	2AI
11	74569851	Spring (3-1/2",4-1/2")	3204979 A			17	4AI

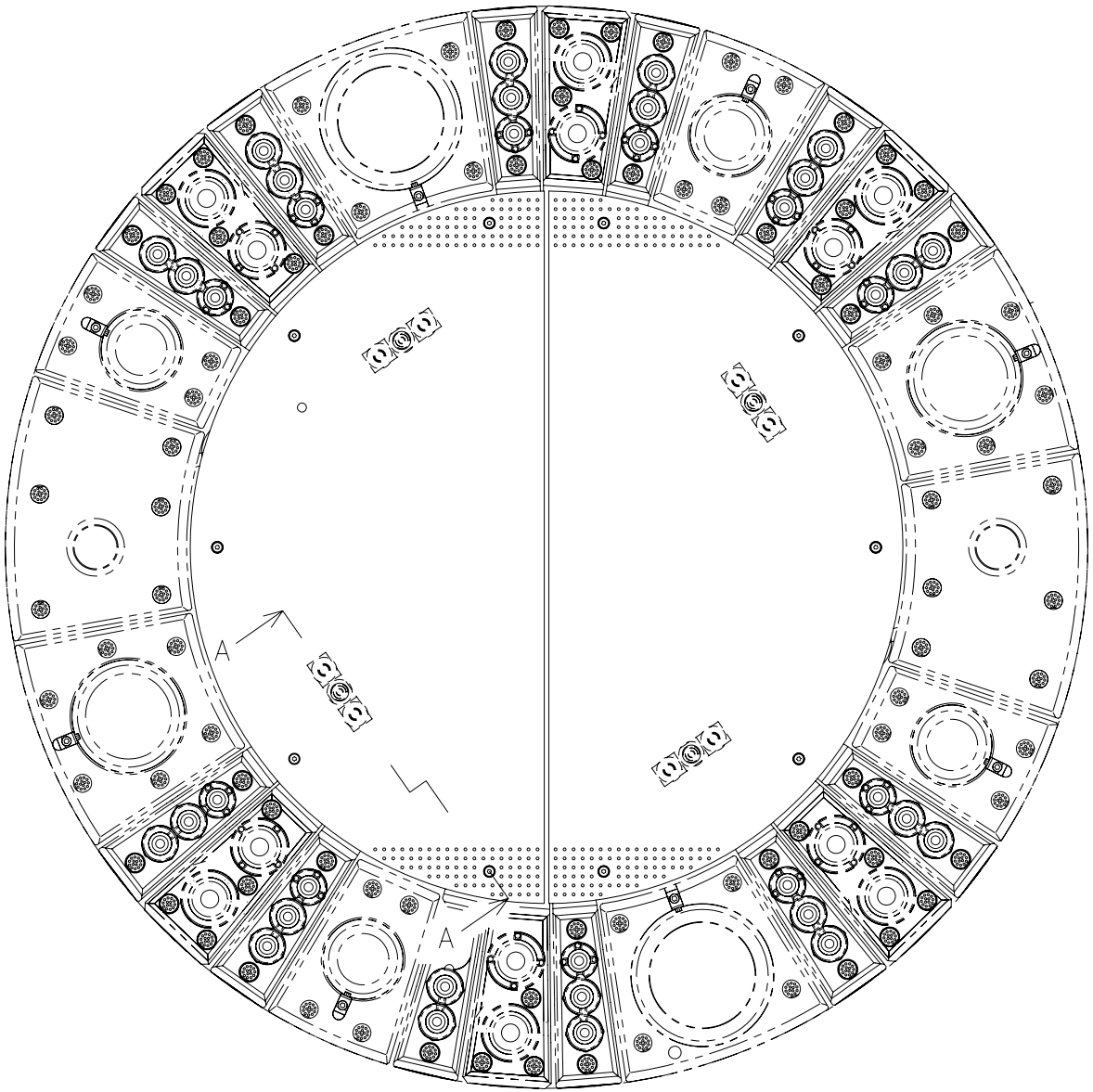

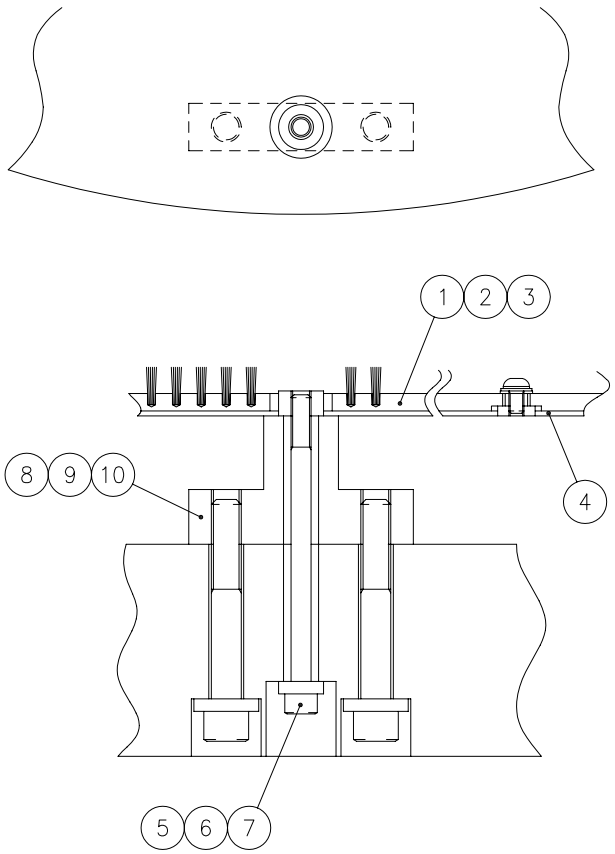

SECTION A–A

6875490

Unit No. 95

Turret B(4) From Serial No.36102001 and after

Index	Code	Parts Name	Drawing No.	Type	Maker	Q'ty	Note
1	74418882	MDF Brush (Support Plate)	6875491			2	2AI
1	74419344	MDF Brush (Support Plate)	6877148			2	4AI
2	36379029	Button Head Screw	P334500013	M6X10		10	
3	79565419	Washer	P336000005	6(Regular Round)		10	
4	74418883	Brush Setting Plate	6875492			1	2AI
4	74419345	Brush Setting Plate	6877149			1	4AI
5	74707962	Hex Soc Cap Screw	P330230026	M8X120		4	2AI
5	79316161	Hex Soc Cap Screw	P330230024	M8X110		4	4AI
6	74314204	Washer (M8)	0827367			4	
7	86610326	Spring Washer	P336050006	8		4	4AI
8	74379721	Support Block	6530319 C			4	
9	52332453	Hex Soc Cap Screw	P330250016	M12X85		8	2AI
9	10558427	Hex Soc Cap Screw	P330250014	M12X75		8	4AI
10	74303703	Washer (M12)	0827014 B			8	

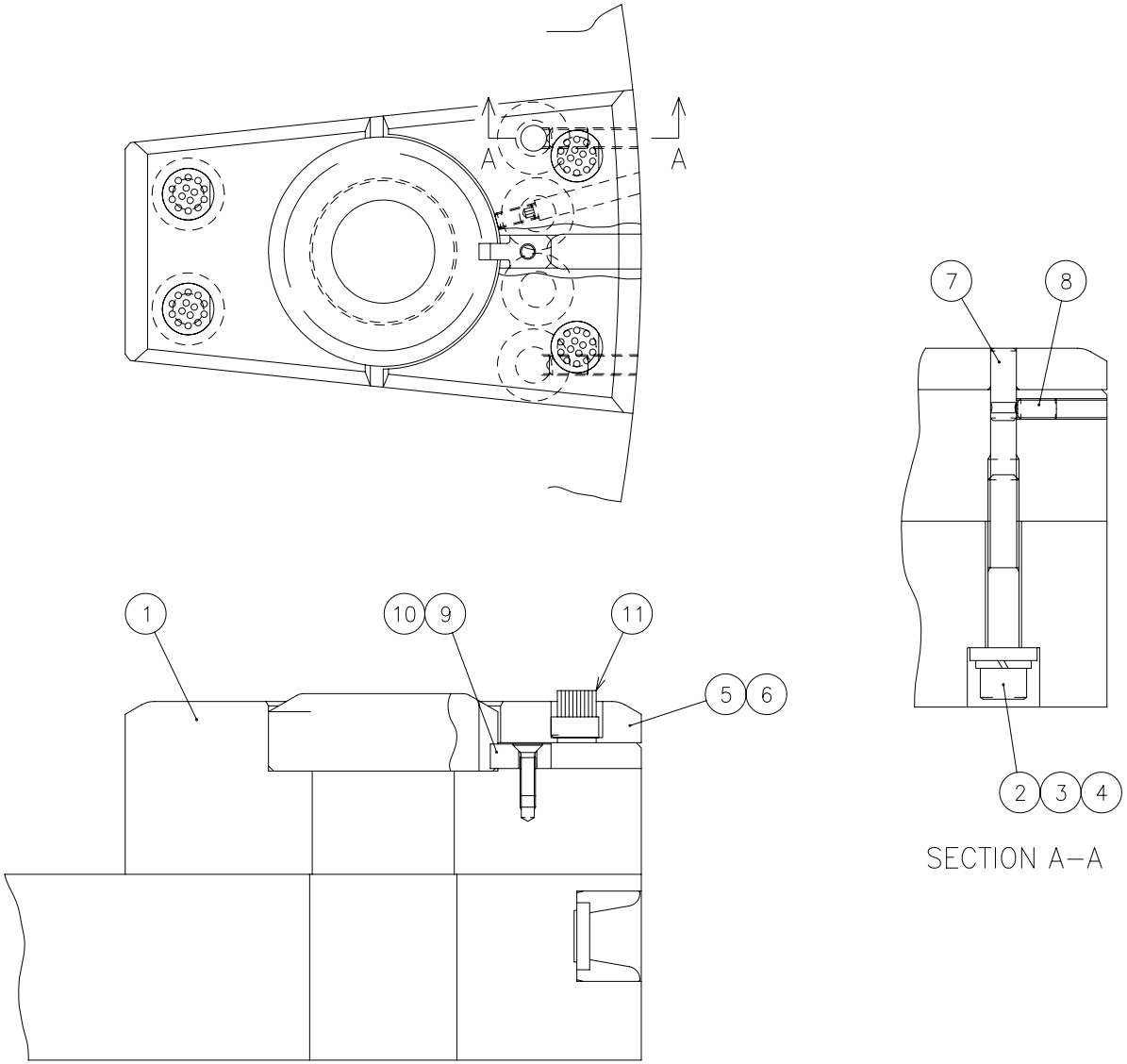

6877129

Unit No. 96

Turret B(5)

From Serial No.36102001 and after

Index	Code	Parts Name	Drawing No.	Type	Maker	Q'ty	Note
1	74379730	2" Die Holder	6570265			1	
2	10558427	Hex Soc Cap Screw	P330250014	M12X75		6	
3	74303703	Washer (M12)	0827014 B			6	
4	86610819	Spring Washer	P336050008	12		6	
5	74379731	2" Die Spacer	6570266			1	
6	21218020	Socket Set Screw	P330590054	M6X15(Dimple Type)		1	
7	75426232	Parallel Pin	P337048020	LC-BX10X28	NITTO SEIKO	2	
8	74563132	Ball Plunger	P338182011	BP-8-H	JEC	2	
9	74306001	Die Key	0488034 C			1	
10	74183324	Flat Head Screw	P334110030	M6X20		1	
11	74569824	Brush C-3S	6812866 A			4	

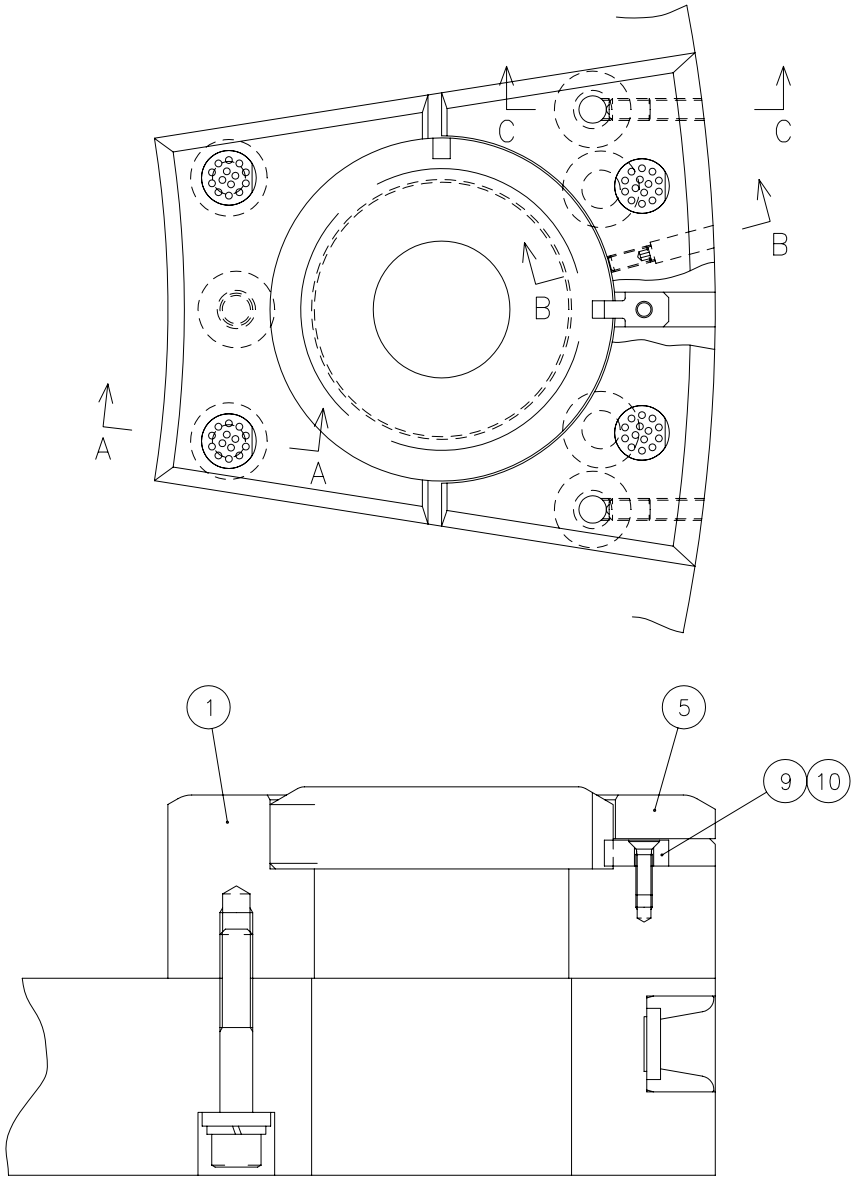

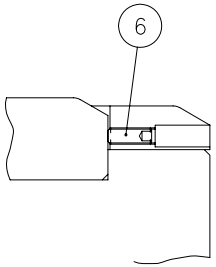

SECTION B–B

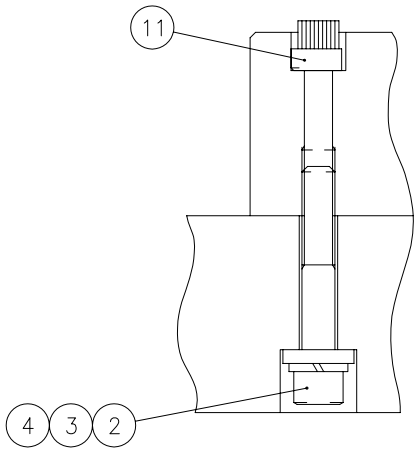

SECTION A–A

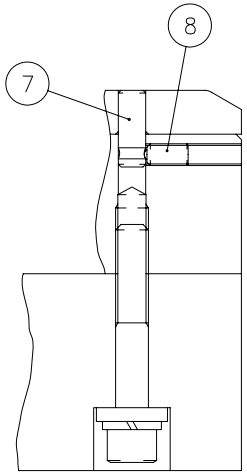

SECTION C–C

6877130

Unit No. 97

Turret B(6)

From Serial No.36102001 and after

Index	Code	Parts Name	Drawing No.	Type	Maker	Q'ty	Note
1	74379732	3-1/2" Die Holder	6570268			1	
2	10558427	Hex Soc Cap Screw	P330250014	M12X75		6	
3	74303703	Washer (M12)	0827014 B			6	
4	86610819	Spring Washer	P336050008	12		6	
5	74379733	3-1/2" Die Spacer	6570269			1	
6	21218020	Socket Set Screw	P330590054	M6X15(Dimple Type)		1	
7	75426232	Parallel Pin	P337048020	LC-BX10X28	NITTO SEIKO	2	
8	74563132	Ball Plunger	P338182011	BP-8-H	JEC	2	
9	74306001	Die Key	0488034 C			1	
10	74183324	Flat Head Screw	P334110030	M6X20		1	
11	74569824	Brush C-3S	6812866 A			4	

Turret B(7) <4-1/2" Die Holder (For 2AI)>

From Serial No.36102001 and after

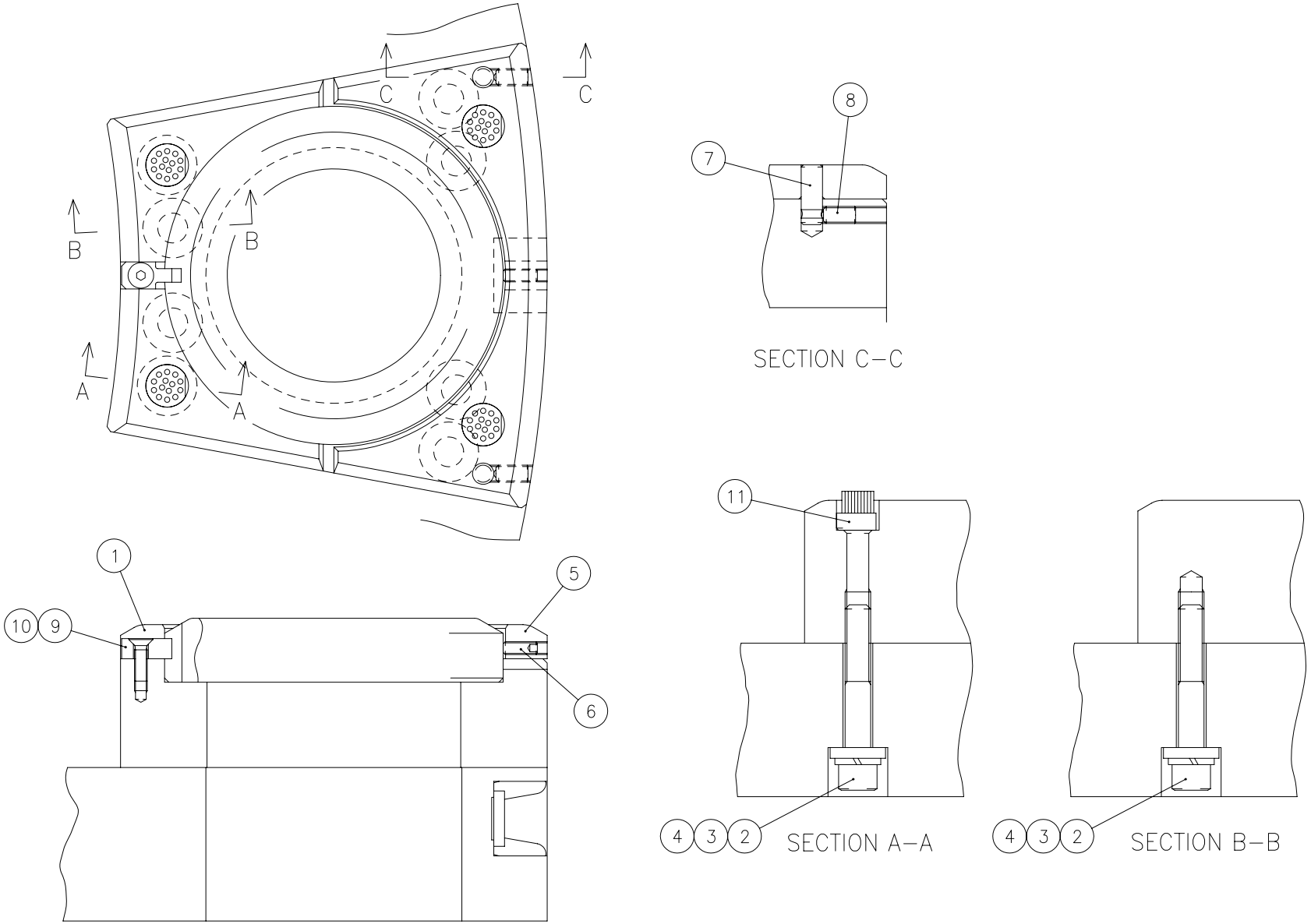

6877131

Unit No. 98

Turret B(7)

From Serial No.36102001 and after

Index	Code	Parts Name	Drawing No.	Type	Maker	Q'ty	Note
1	74382402	4-1/2" Die Holder	6570474 A			1	
2	10558427	Hex Soc Cap Screw	P330250014	M12X75		6	
3	74303703	Washer (M12)	0827014 B			6	
4	86610819	Spring Washer	P336050008	12		6	
5	74379738	4-1/2" Die Spacer	6570476			1	
6	21218020	Socket Set Screw	P330590054	M6X15(Dimple Type)		1	
7	75426232	Parallel Pin	P337048020	LC-BX10X28	NITTO SEIKO	2	
8	74563132	Ball Plunger	P338182011	BP-8-H	JEC	2	
9	74306001	Die Key	0488034 C			1	
10	74183324	Flat Head Screw	P334110030	M6X20		1	
11	74569824	Brush C-3S	6812866 A			4	

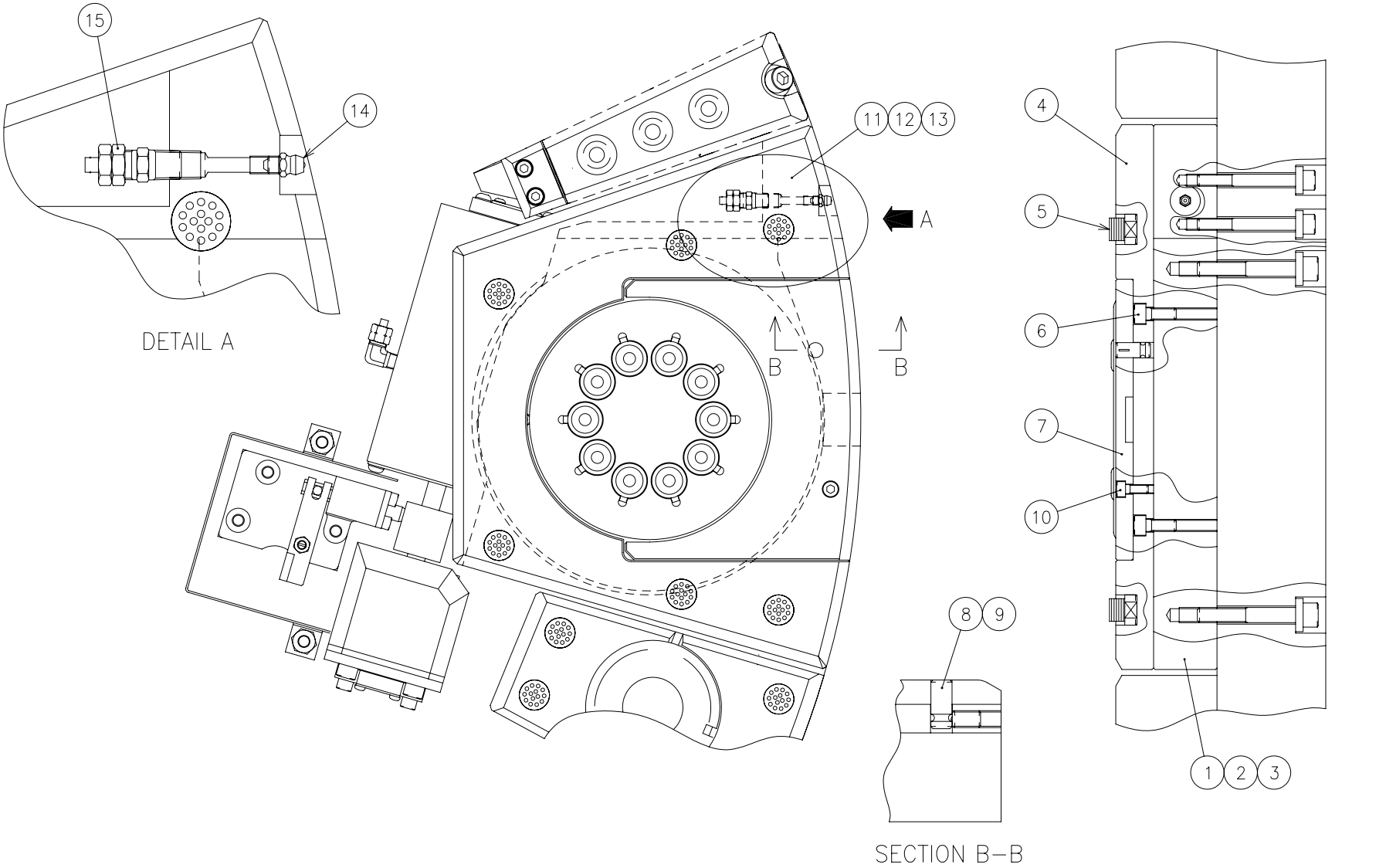
15
14
DETAIL A
11
12
13
A
B
B
4
5
6
7
10
8
9
1
2
3
SECTION B–B
6877185

Unit No. 99

Turret B(8) From Serial No.36102001 and after

Index	Code	Parts Name	Drawing No.	Type	Maker	Q'ty	Note
1	74571437	4-1/2" Die Spacer (A)	6915287			1	
2	78180217	Hex Soc Cap Screw	P330240019	M10X85		3	
3	74306022	Washer (M10)	0827013 B			3	
4	74571438	4-1/2" Die Spacer (B)	6915288			1	
5	74569824	Brush C-3S	6812866 A			6	
6	79564804	Hex Soc Cap Screw	P330230006	M8X20		2	
7	74571439	4-1/2" Die Spacer (C)	6915289			1	
8	74379658	Grooved Pin	6570463			1	
9	74563132	Ball Plunger	P338182011	BP-8-H	JEC	1	
10	79564305	Hex Soc Cap Screw	P330220006	M6X15		1	
11	74571440	4-1/2" Die Spacer (D)	6915290			1	
12	10329641	Hex Soc Cap Screw	P330230019	M8X85		2	
13	74314204	Washer (M8)	0827367			2	
14	31179170	Grease Nipple	P560600002	A-MT6X1		1	
15	74379761	Bite Type Pipe Fitting	P585534027	C4N4X2-PT1/8	NITTA MOORE	1	

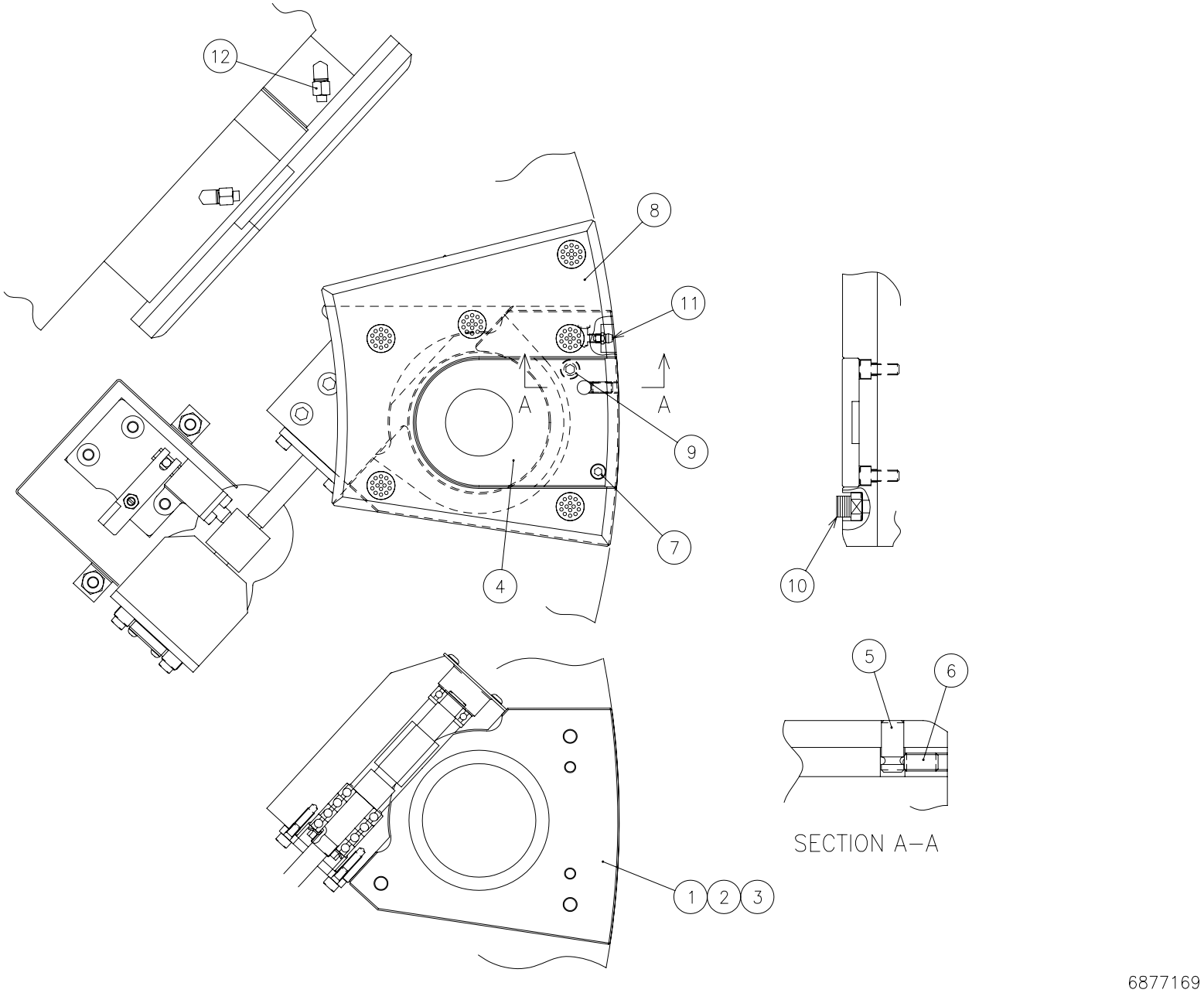
12
8
11
A
A
9
7
4
10
5
6
SECTION A–A
1
2
3
6877169

Unit No. 100

Turret B(9)

From Serial No.36102001 and after

Index	Code	Parts Name	Drawing No.	Type	Maker	Q'ty	Note
1	74571422	1-1/4" Die Spacer (A)	6915272			1	
2	74383549	Hex Soc Cap Screw	P330240016	M10X70		3	
3	74306022	Washer (M10)	0827013 B			3	
4	74572377	1-1/4" Die Spacer (B)	6915273 A			1	
5	74379658	Grooved Pin	6570463			1	
6	74563132	Ball Plunger	P338182011	BP-8-H	JEC	1	
7	79564305	Hex Soc Cap Screw	P330220006	M6X15		1	
8	74571424	1-1/4" Die Spacer (C)	6915274			1	
9	79564804	Hex Soc Cap Screw	P330230006	M8X20		2	
10	74569824	Brush C-3S	6812866 A			6	
11	31179170	Grease Nipple	P560600002	A-MT6X1		1	
12	74379661	Bite Type Pipe Fitting	P585564037	L4N4X2-PT1/8	NITTA MOORE	1	

Turret B(10) <4-1/2" Jig (For 4AI)>

From Serial No.36102001 and after

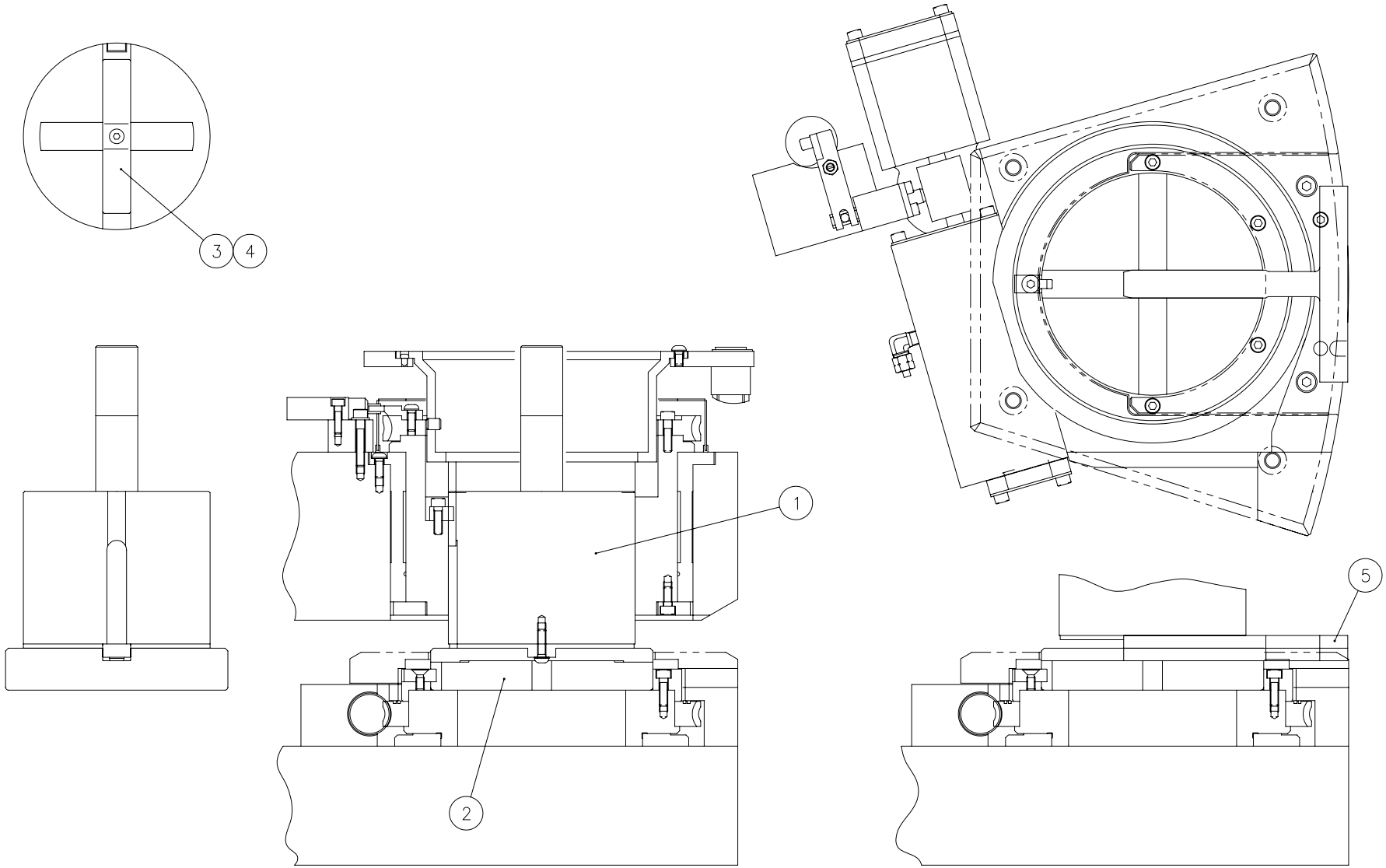

6532990B

Unit No. 101

Turret B(10) From Serial No.36102001 and after

Index	Code	Parts Name	Drawing No.	Type	Maker	Q'ty	Note
1	74569422	Punch Jig (4-1/2")	6598471			1	
2	74387048	Die Jig (4-1/2")	6532992 A			1	
3	74379790	Key (4-1/2")	6532993			1	
4	74314603	Button Head Screw	P334500016	M6X20		1	
5	74569423	T-type Jig (4-1/2")	6532994 A			2	
6	74375830	T-Type Jig	6010633			1	List Only
7	36389505	Knob	P317264014	PC25X8B	IMAO Mfg	2	List Only
8	36326826	Hex Soc Cap Screw	P330230022	M8X100		2	Accessory (List Only)
9		Lubricating Oil	P238038001	GRP-SPRAY-0.3L	IWATANI Industry	1	Accessory (List Only)

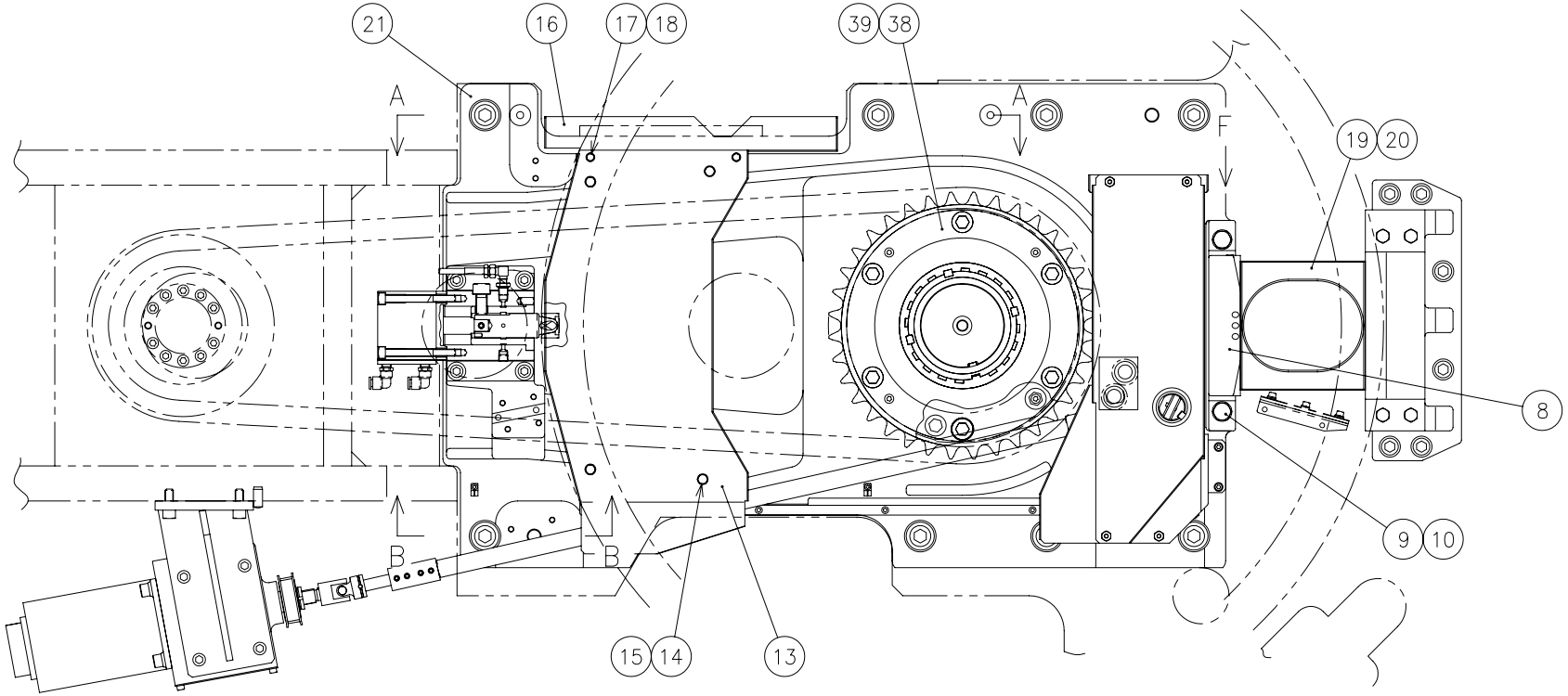

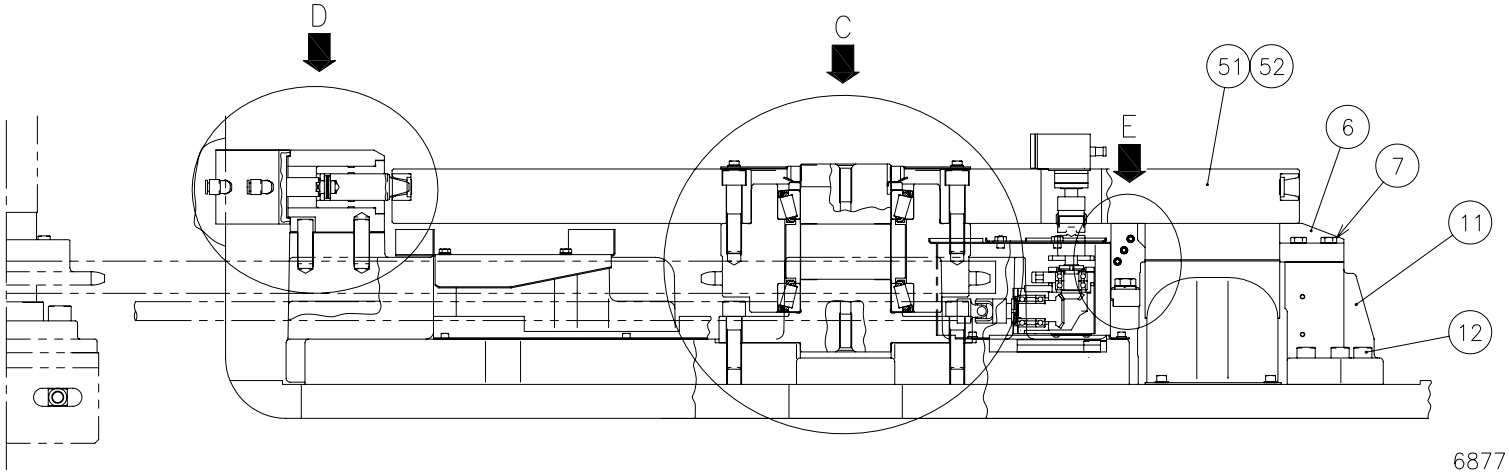

6877110#1
6877110#2

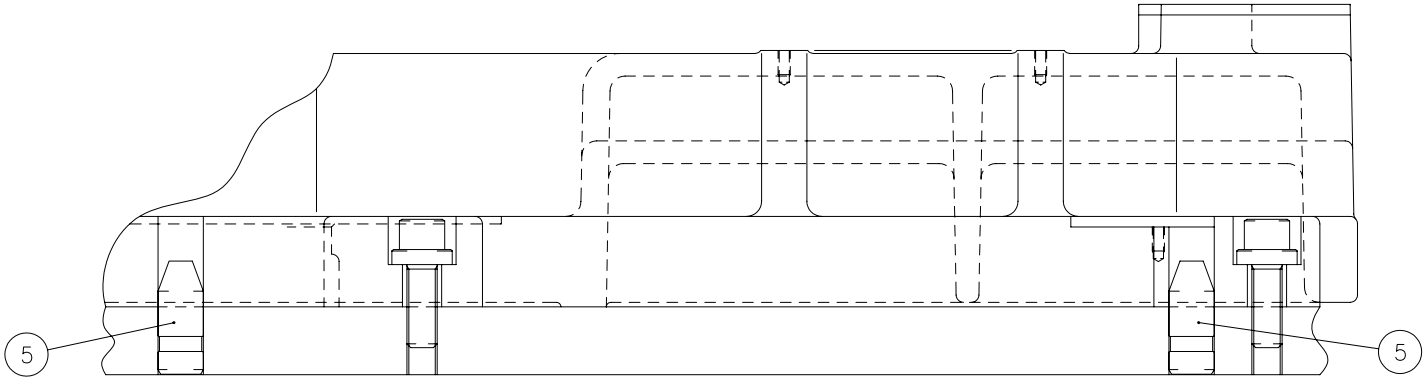

SECTION A–A

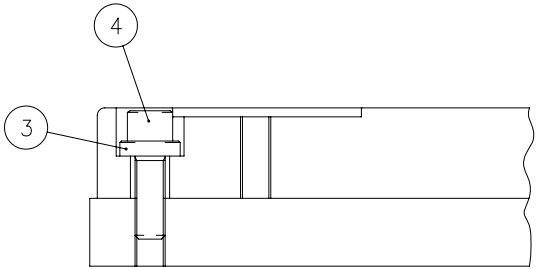

SECTION B–B

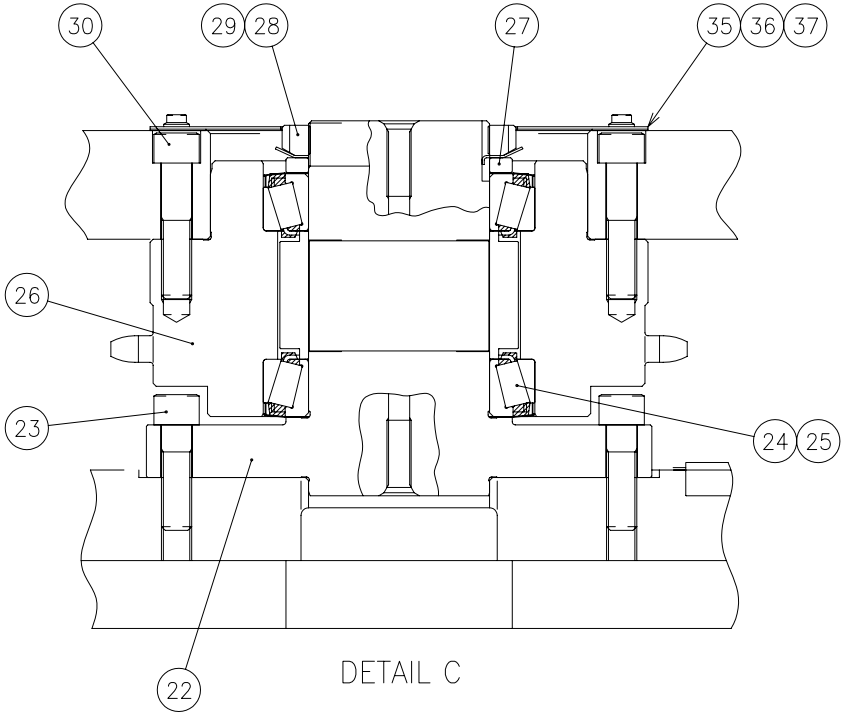

DETAIL C

6877110#1
6877110#2

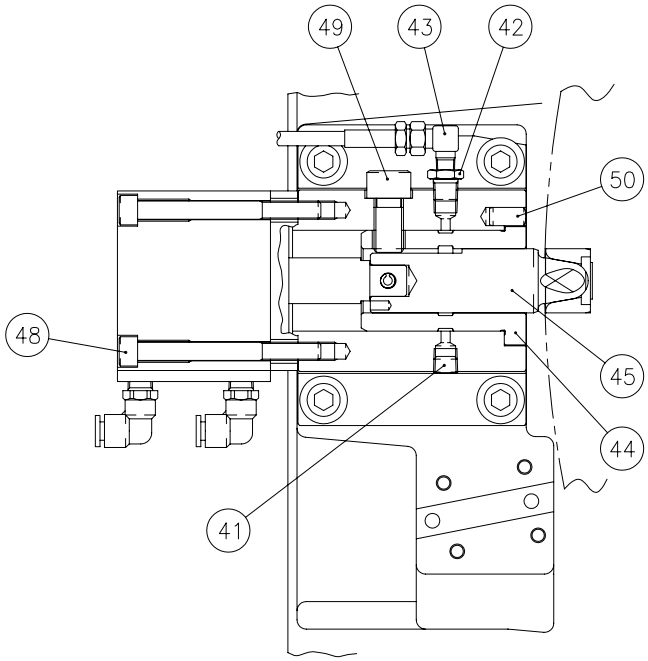

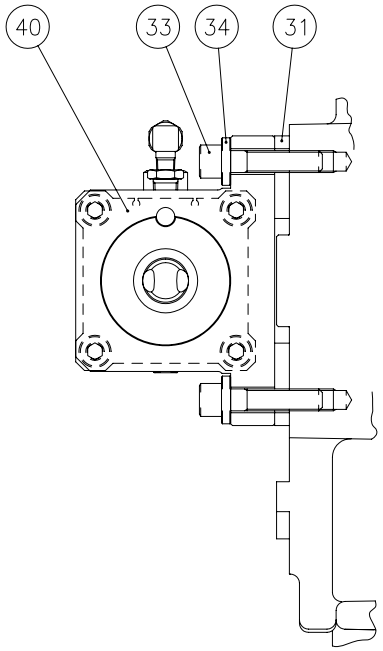

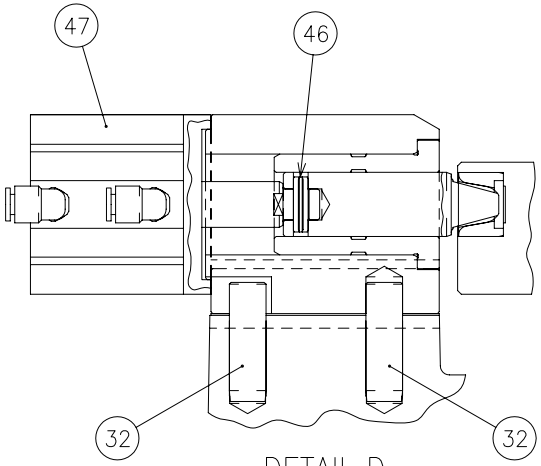

DETAIL D

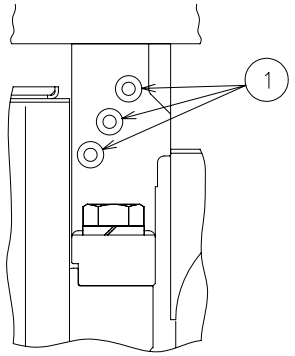

DETAIL E

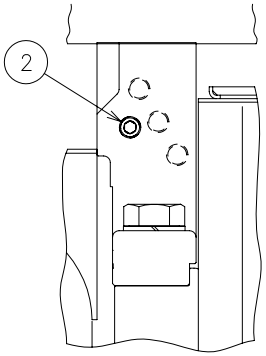

VIEW F

6877110#1
6877110#2

Turret B-PV(1) From Serial No.36102001 and after

Index	Code	Parts Name	Drawing No.	Type	Maker	Q'ty	Note
1	74351914	Instant Fitting	P586534002	EC6-PT1/8	NITTA MOORE	3	
2	74389708	Plug For Piping	P580208034	P10410	GOSHO Works	1	
3	74301502	Washer	0821009 B			9	
4	71101346	Hex Soc Cap Screw	P330270008	M20X65		9	
5	74417827	Locating Pin	6874275			2	
6	74569665	Disk Support (Front)	6812584			1	
7	36147024	Bolt	P330050007	M12X50		4	
8	74418878	Disk Support (Rear)	6875489			1	
9	74303203	Bolt	P330060022	M16X55		2	
10	79566731	Spring Washer	P336050010	16		2	
11	74569666	Disk Support Block	6812585 B			1	
12	74535204	Hex Soc Cap Screw	P330260037	M16X65		6	
13	74569668	Scrap Receiver	6812588 A			1	
14	79567302	Bolt	P330030004	M8X15		4	
15	86610326	Spring Washer	P336050006	8		4	
16	74569669	Scrap Receiver Wing	6812589 A			1	
17	10442903	Bolt	P330020003	M6X12		2	
18	79564311	Spring Washer	P336050005	6		2	
19	74569670	Disk Support Cover	6812590			1	

Index	Code	Parts Name	Drawing No.	Type	Maker	Q'ty	Note
20	74382078	Flange Socket Bolt	P330468006	M8X15	NISSAN NEJI	4	
21	74418896	Lower Base Assy	6875494			1	
22	74419338	Bearing Shaft (Lower)	6812557			1	
23	71357839	Hex Soc Cap Screw	P330270009	M20X70		6	
24	74569663	Roller Bearing Set	7830623 A	HR32024XJL11DB	NSK	1	
25	74303127	Shield Plate	P406188005	32024XAV	FUKUDA	2	
26	74419339	Bearing Housing (Lower)	6812558			1	
27	74379119	Collar	6530298			1	
28	74563668	Crown Nut	0811674 A			1	
29	74303123	Lock Washer	P406040019	AW-24		1	
30	74722722	Hex Soc Cap Screw	P330270011	M20X80		6	
31	74577424	Spacer	6812556			2	
32	74389710	Parallel Pin	P337055079	DPS-A20-65	OKITA	2	
33	74304914	Hex Soc Cap Screw	P330250010	M12X55		4	
34	74303703	Washer (M12)	0827014 B			4	
35	74569675	Bearing Cover	6812595			1	
36	74569676	Cover Seal	6812596			1	
37	74382078	Flange Socket Bolt	P330468006	M8X15	NISSAN NEJI	4	
38	74386826	Driven Sprocket	6593831			1	

Index	Code	Parts Name	Drawing No.	Type	Maker	Q'ty	Note
39	36322123	Hex Soc Cap Screw	P330270004	M20X45		6	
40	74569659	Index Pin Housing	6812587 A			1	
41	74389708	Plug For Piping	P580208034	P10410	GOSHO Works	1	
42	74722884	Bush For Piping	P580013001	M-1/4X1/8	BAN SS	1	
43	74722994	Hose Adapter	P589223029	8021RG02	BRIDGESTON	1	
44	74379122	Index Pin Bushing	6530302			1	
45	74379123	Index Pin	6530303 B			1	
46	74722785	Spring Pin	P337030080	8X30		1	
47	74417845	Air Cylinder (Compact Type)	7831566	CDQ2B80-30-DCH5905H	SMC	1	
48	74381569	Hex Soc Cap Screw	P330240022	M10X100		4	
49	74389709	Bolt	6572869 A			1	
50	75428631	Parallel Pin	P337020056	A-10X20		1	
51	74419340	70ST Lower Turret Disk	6877113			1	2AI
51	74419341	58ST Lower Turret Disk	6877142			1	4AI
52	74302104	Bushing	0480336 K			34	2AI
52	74302104	Bushing	0480336 K			30	4AI

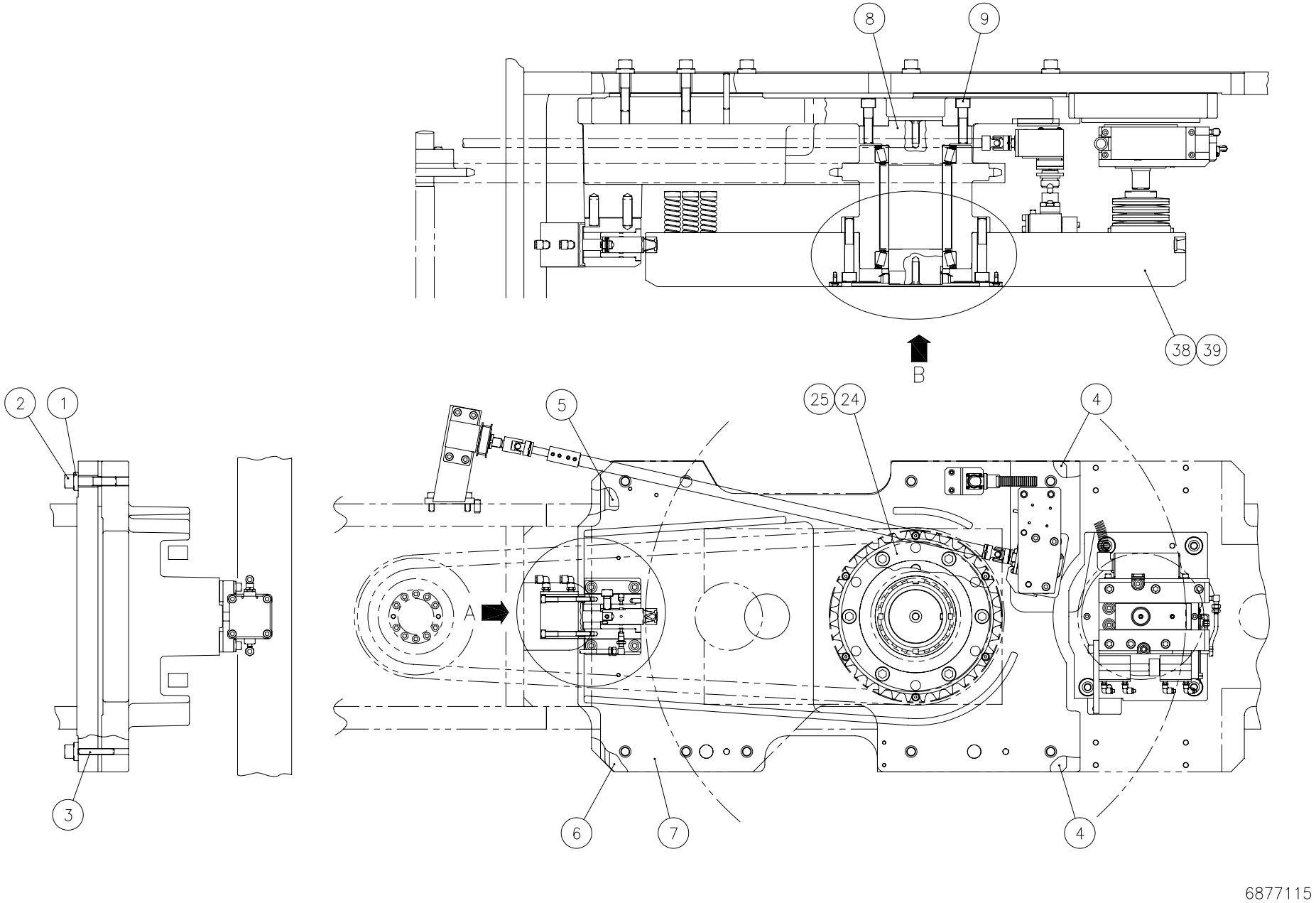
8
9
38
39
B
2
1
5
25
24
4
A
3
6
7
4
6877115

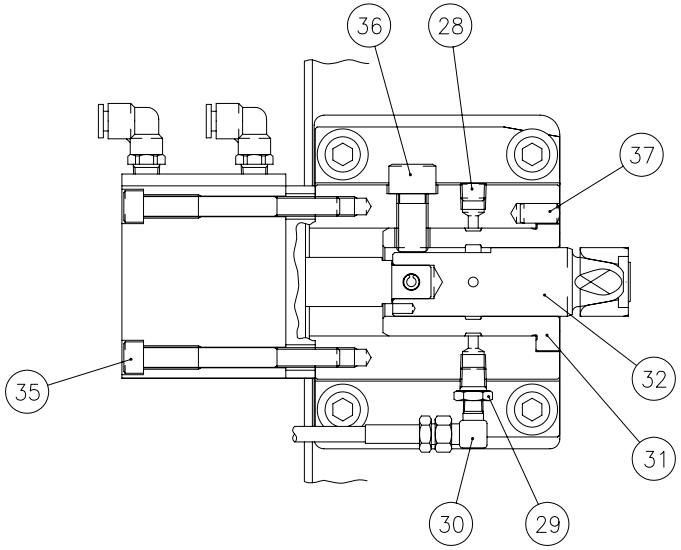

DETAIL A

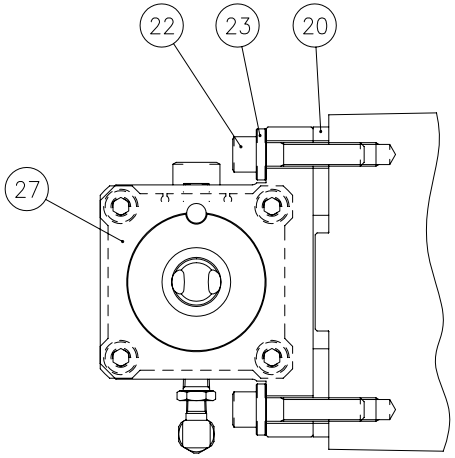

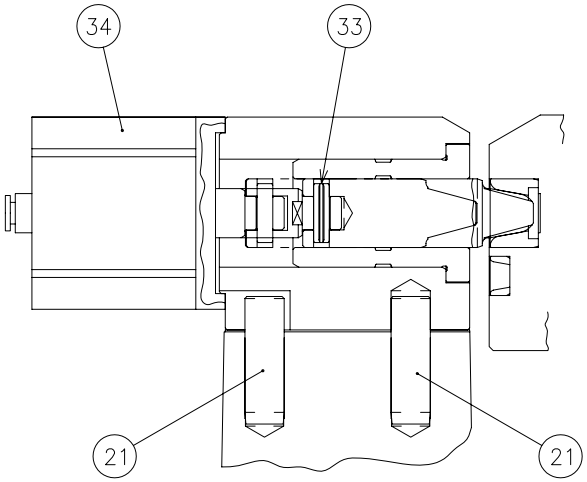

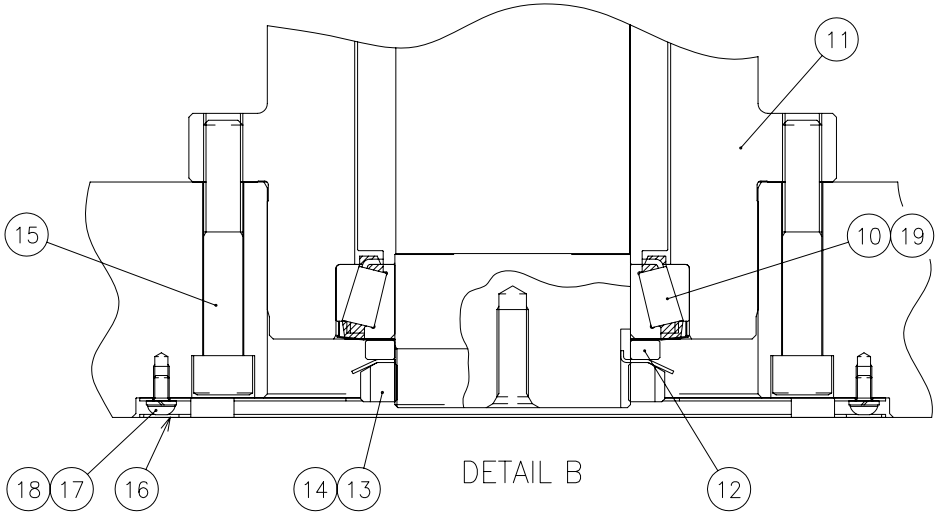

DETAIL B

6877115

Turret B-PV(2) From Serial No.36102001 and after

Index	Code	Parts Name	Drawing No.	Type	Maker	Q'ty	Note
1	74301502	Washer	0821009 B			9	
2	36618103	Hex Soc Cap Screw	P330270013	M20X90		9	
3	74415408	Parallel Pin	P337054103	MSTM13-80	MISUMI	2	
4	74569654	Spacer (A)	6812554			2	
5	74569655	Spacer (B)	6812555			1	
6	74419342	Spacer (C)	6877116			1	
7	74419343	Upper Base Assy	6877119			1	
8	74569656	Bearing Shaft (Upper)	6812552 A			1	
9	74722722	Hex Soc Cap Screw	P330270011	M20X80		8	
10	74569657	Roller Bearing Set	7830622 A	HR32024XJL11DB	NSK	1	
11	74379117	Bearing Housing (Upper)	6530296			1	
12	74379119	Collar	6530298			1	
13	74563668	Crown Nut	0811674 A			1	
14	74303123	Lock Washer	P406040019	AW-24		1	
15	31172405	Hex Soc Cap Screw	P330270017	M20X120		6	
16	74379120	Cap	6530299 A			1	
17	10569021	Button Head Screw	P334500019	M8X15		6	
18	86610326	Spring Washer	P336050006	8		6	
19	74303127	Shield Plate	P406188005	32024XAV	FUKUDA	2	

Index	Code	Parts Name	Drawing No.	Type	Maker	Q'ty	Note
20	74577424	Spacer	6812556			2	
21	74389710	Parallel Pin	P337055079	DPS-A20-65	OKITA	2	
22	74304914	Hex Soc Cap Screw	P330250010	M12X55		4	
23	74303703	Washer (M12)	0827014 B			4	
24	74386826	Driven Sprocket	6593831			1	
25	36322123	Hex Soc Cap Screw	P330270004	M20X45		6	
26	74702340	Plug For Piping	P580208001	GM-1/8	GOSHO Works	1	List Only
27	74569659	Index Pin Housing	6812587 A			1	
28	74389708	Plug For Piping	P580208034	P10410	GOSHO Works	1	
29	74722884	Bush For Piping	P580013001	M-1/4X1/8	BAN SS	1	
30	74722994	Hose Adapter	P589223029	8021RG02	BRIDGESTON	1	
31	74379122	Index Pin Bushing	6530302			1	
32	74379123	Index Pin	6530303 B			1	
33	74722785	Spring Pin	P337030080	8X30		1	
34	74417845	Air Cylinder (Compact Type)	7831566	CDQ2B80-30-DCH5905H	SMC	1	
35	74381569	Hex Soc Cap Screw	P330240022	M10X100		4	
36	74389709	Bolt	6572869 A			1	
37	75428631	Parallel Pin	P337020056	A-10X20		1	
38	74575626	70ST Upper Turret Disk	6811080			1	2AI

Index	Code	Parts Name	Drawing No.	Type	Maker	Q'ty	Note
38	74571410	58ST Upper Turret Disk	6811082 A			1	4AI
39	74302104	Bushing	0480336 K			34	2AI
39	74302104	Bushing	0480336 K			30	4AI

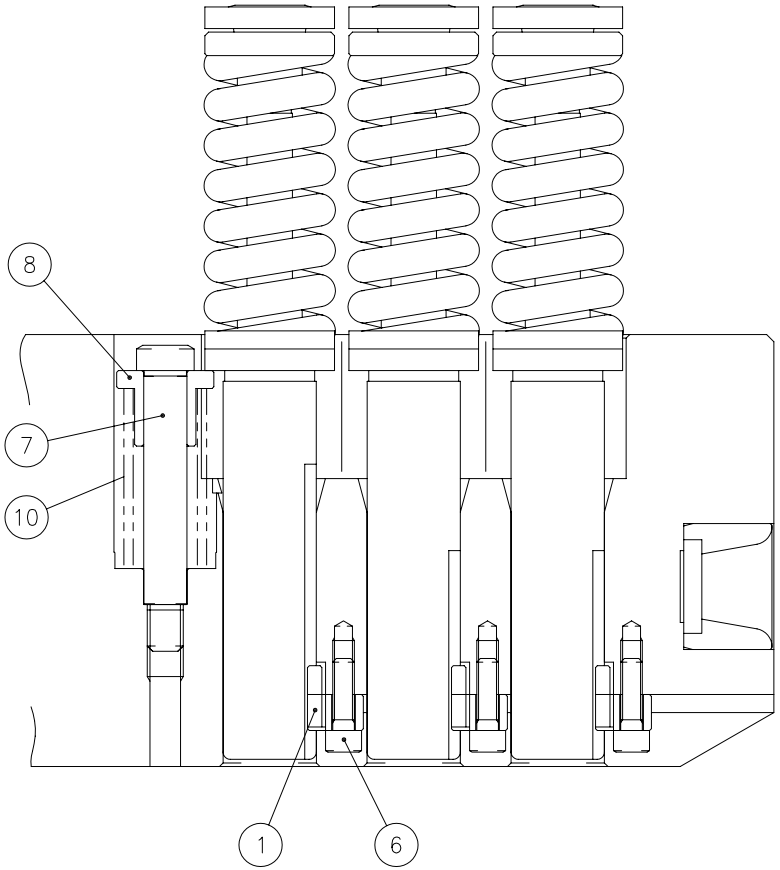

<1/2">

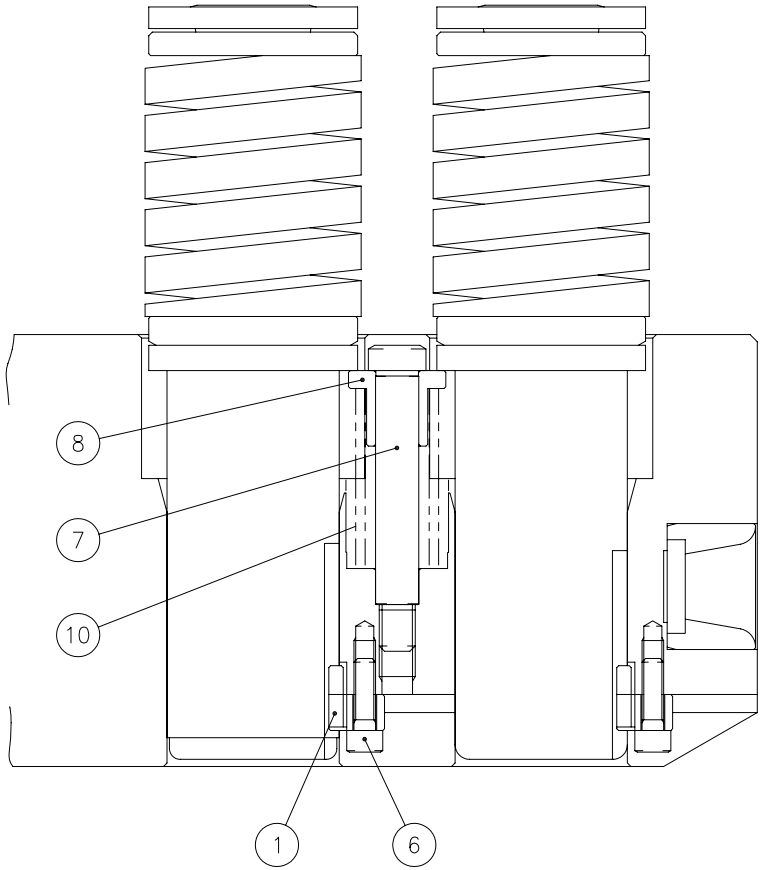

<1−1/4">

6812836
6812837

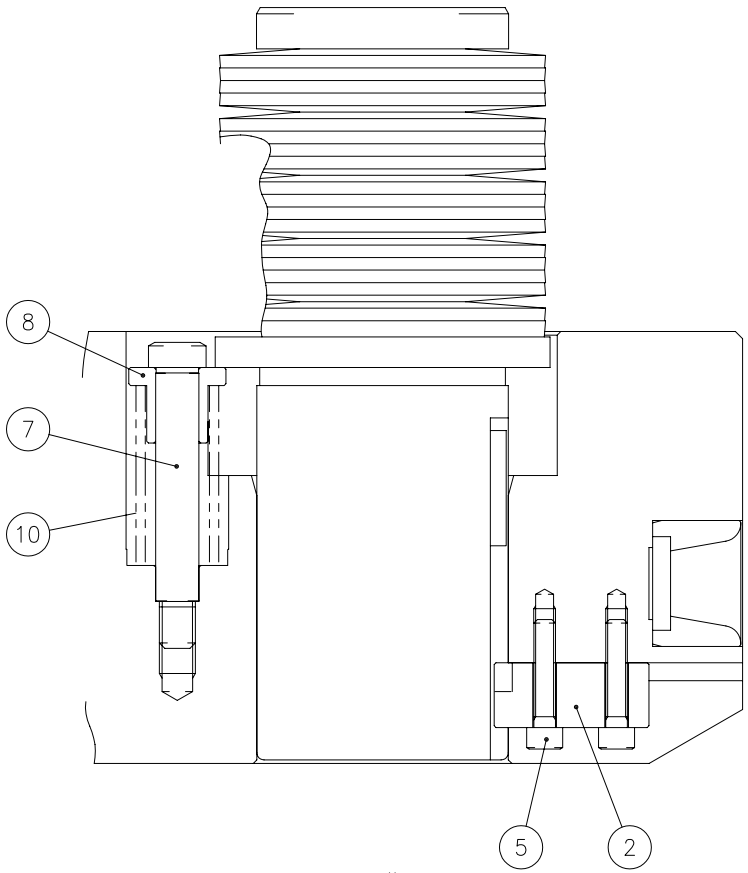

<2">

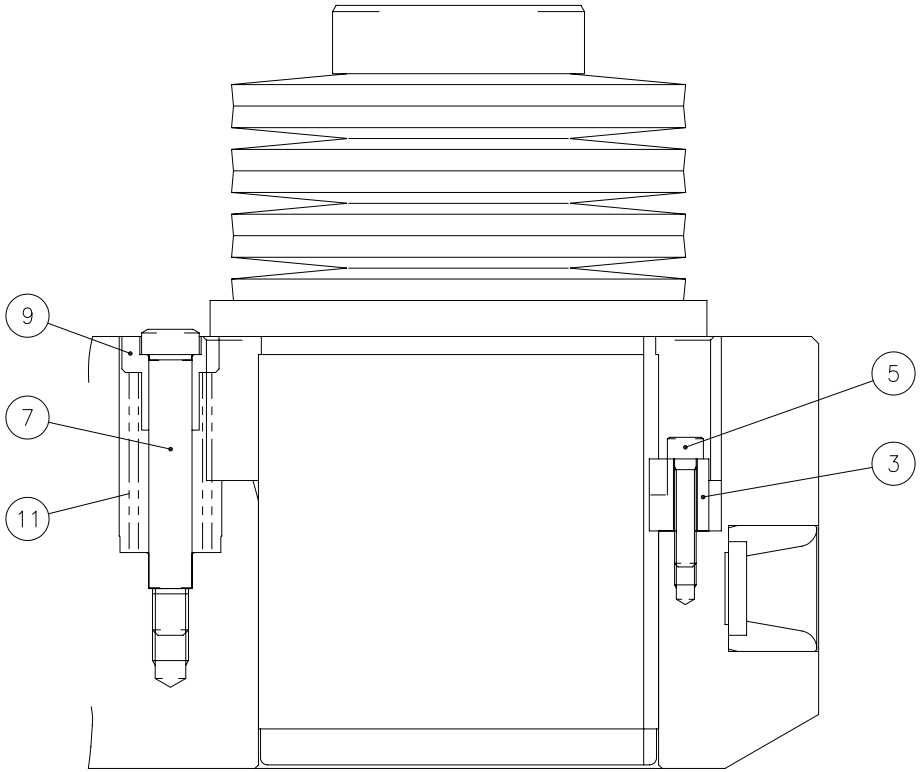

<3-1/2">

6812834
6812835

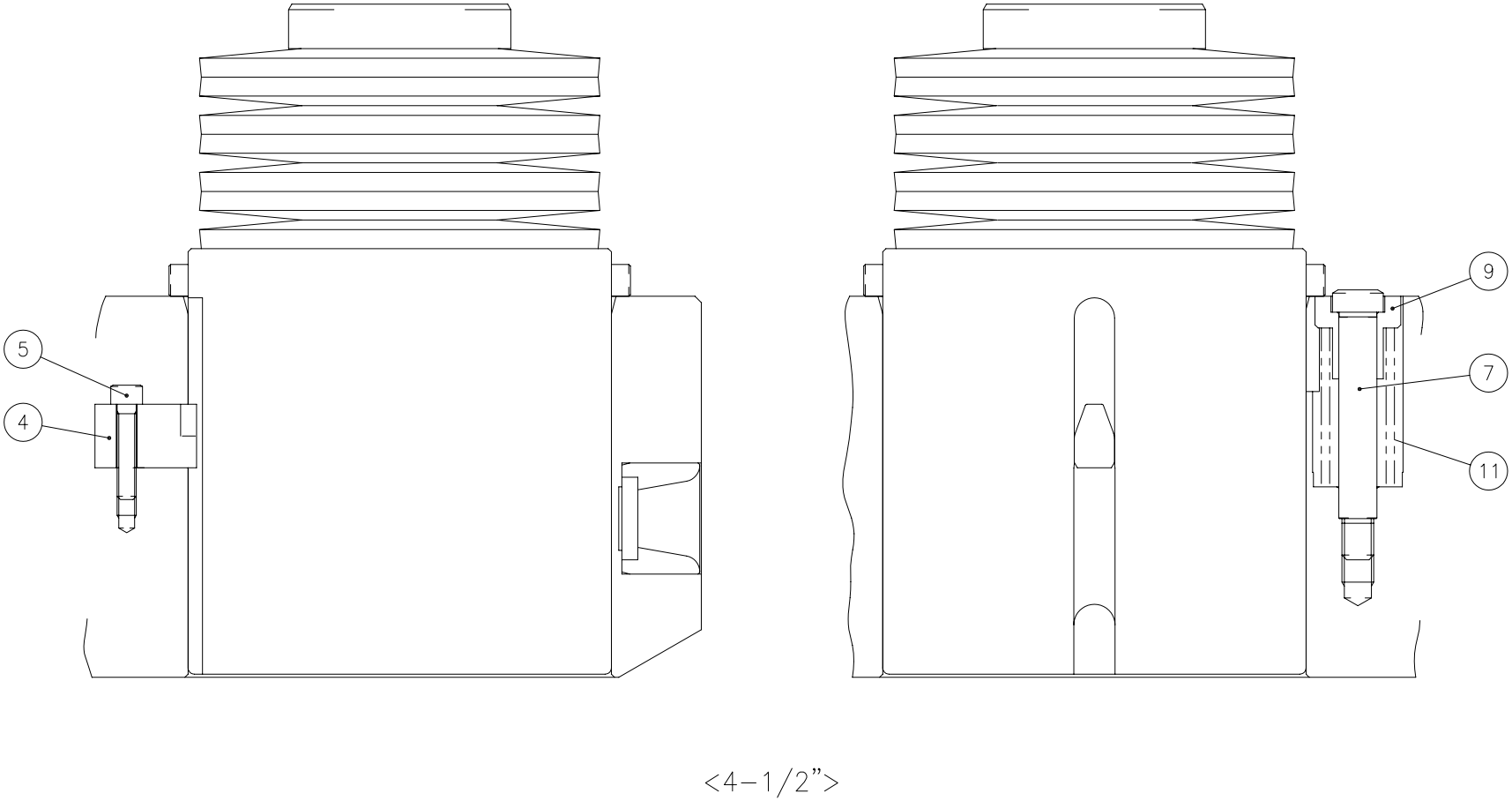

6812833

Index	Code	Parts Name	Drawing No.	Type	Maker	Q'ty	Note
1	74569848	1/2" Guide Key	3008133			48	2AI
1	74569848	1/2" Guide Key	3008133			40	4AI
2	74569850	2" Guide Key	6812864			4	
3	74569852	3-1/2" Guide Key	6812865			2	
4	74561406	4-1/2" Guide Key	7400914 B			2	2AI
5	86213043	Hex Soc Cap Screw	P330220012	M6X30		12	2AI
5	86213043	Hex Soc Cap Screw	P330220012	M6X30		10	4AI
6	79567722	Hex Soc Cap Screw	P330220009	M6X20		48	2AI
6	79567722	Hex Soc Cap Screw	P330220009	M6X20		40	4AI
7	74569846	Shoulder Screw	3204978			118	2AI
7	74569846	Shoulder Screw	3204978			96	4AI
8	74306004	Lifter Collar	5500217 B			102	2AI
8	74306004	Lifter Collar	5500217 B			88	4AI
9	74306014	Lifter Ring	5501009 C			16	2AI
9	74306014	Lifter Ring	5501009 C			8	4AI
10	74569847	Spring (1/2",1-1/4",2")	3200854			90	2AI
10	74569847	Spring (1/2",1-1/4",2")	3200854			79	4AI
11	74569851	Spring (3-1/2",4-1/2")	3204979 A			28	2AI
11	74569851	Spring (3-1/2",4-1/2")	3204979 A			17	4AI

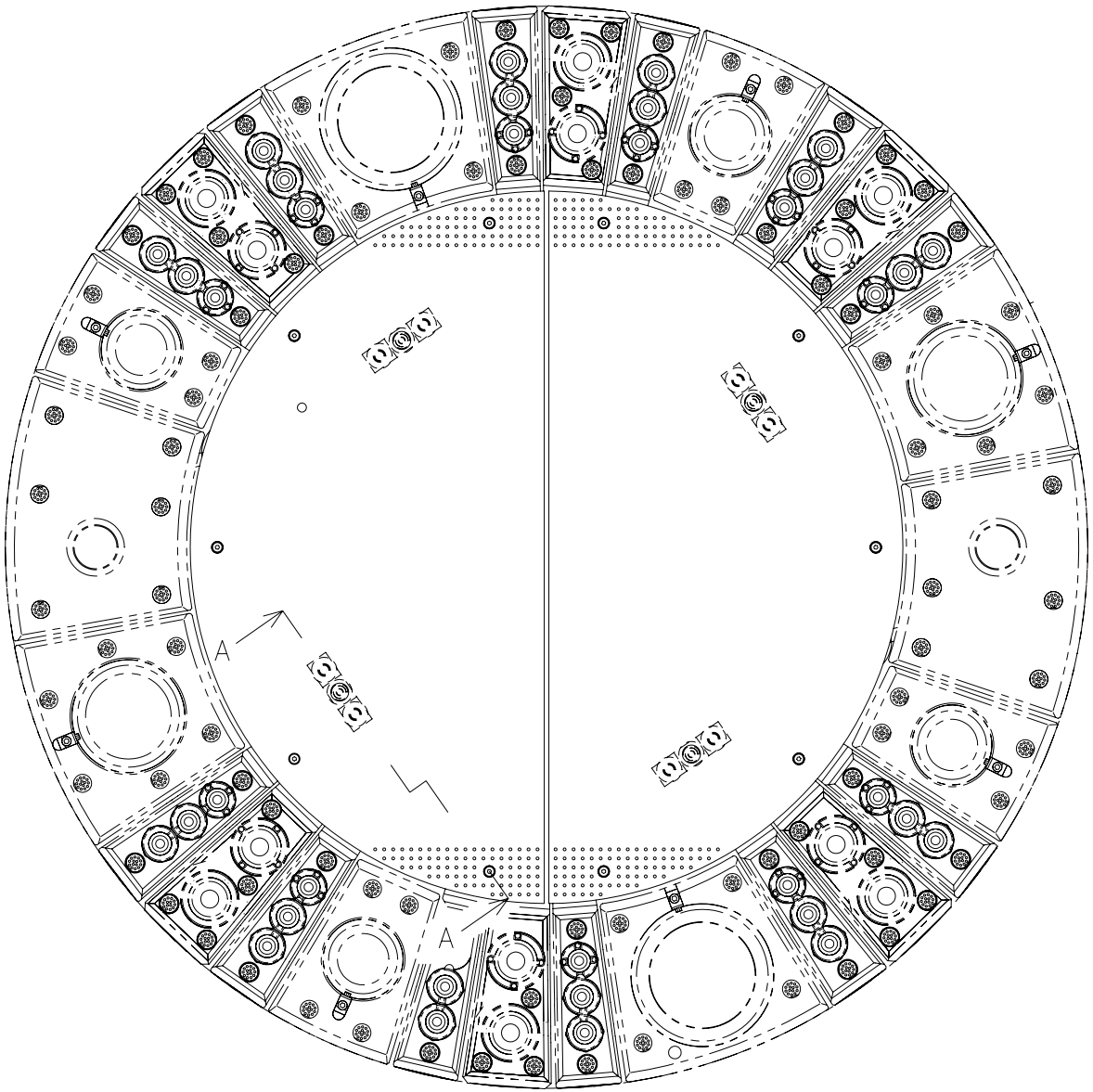

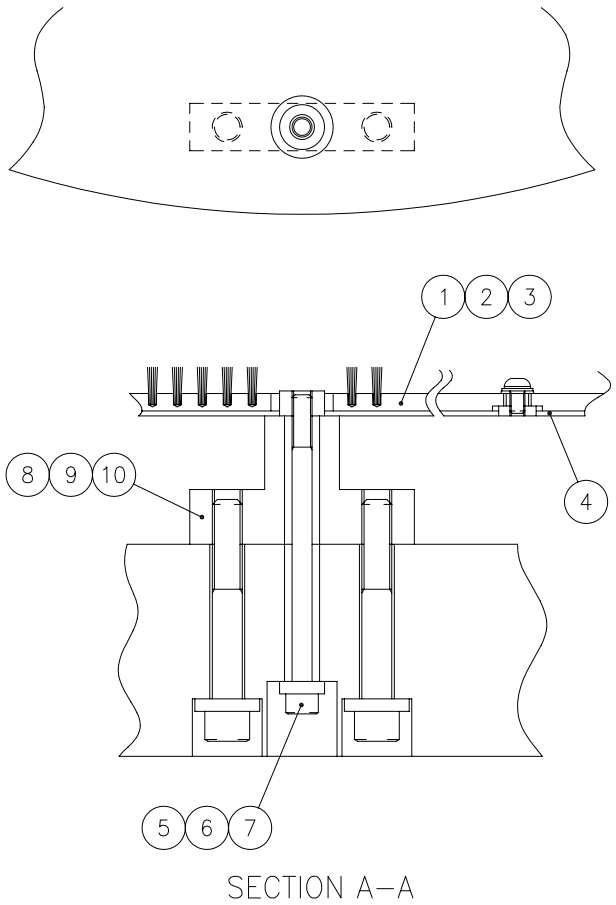

6875490

Unit No. 105

Turret B-PV(4) From Serial No.36102001 and after

Index	Code	Parts Name	Drawing No.	Type	Maker	Q'ty	Note
1	74418882	MDF Brush (Support Plate)	6875491			2	2AI
1	74419344	MDF Brush (Support Plate)	6877148			2	4AI
2	36379029	Button Head Screw	P334500013	M6X10		10	
3	79565419	Washer	P336000005	6(Regular Round)		10	
4	74418883	Brush Setting Plate	6875492			1	2AI
4	74419345	Brush Setting Plate	6877149			1	4AI
5	74707962	Hex Soc Cap Screw	P330230026	M8X120		4	2AI
5	79316161	Hex Soc Cap Screw	P330230024	M8X110		4	4AI
6	74314204	Washer (M8)	0827367			4	
7	86610326	Spring Washer	P336050006	8		4	4AI
8	74379721	Support Block	6530319 C			4	
9	52332453	Hex Soc Cap Screw	P330250016	M12X85		8	2AI
9	10558427	Hex Soc Cap Screw	P330250014	M12X75		8	4AI
10	74303703	Washer (M12)	0827014 B			8	

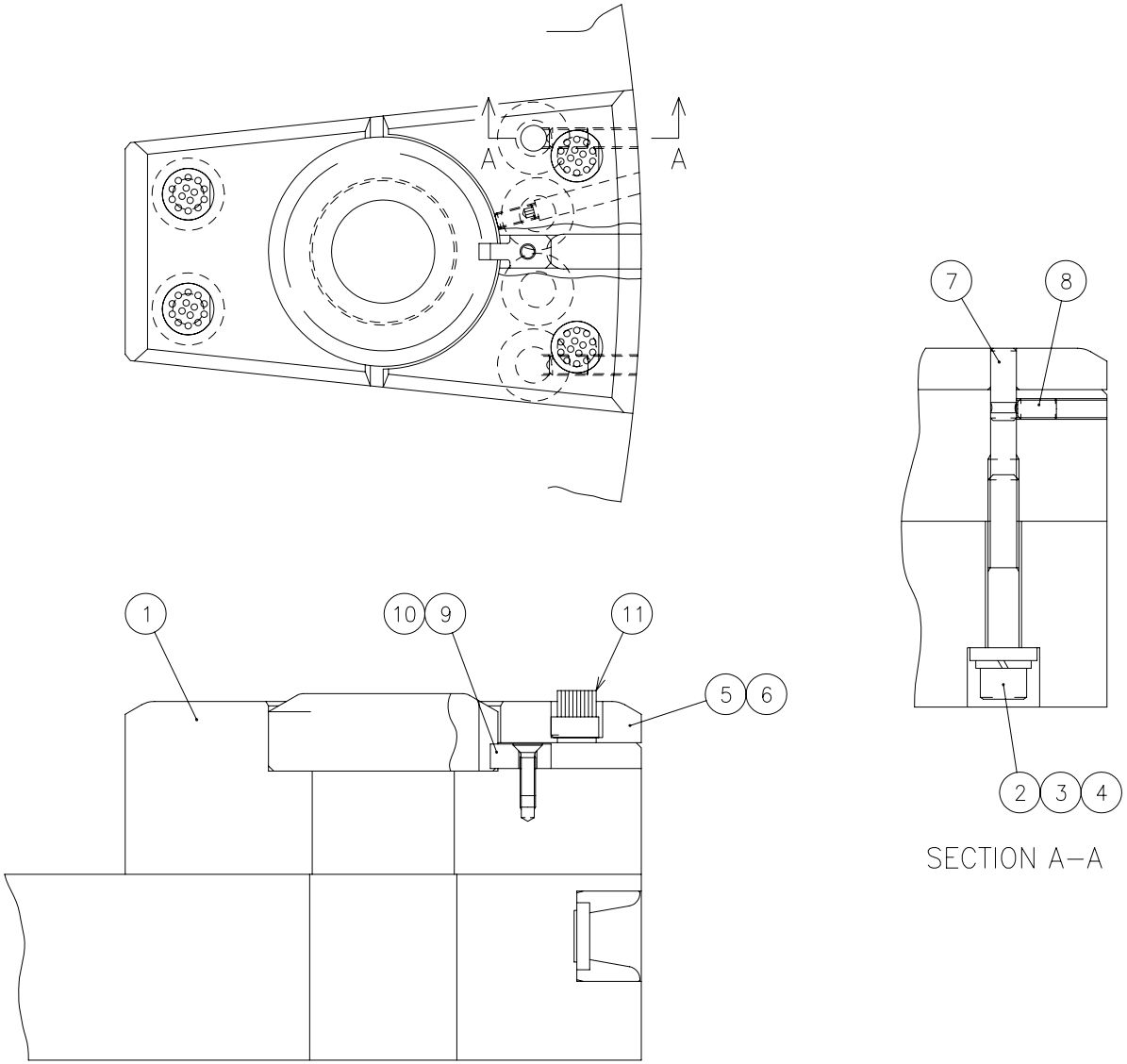

6877129

Unit No. 106

Turret B-PV(5) From Serial No.36102001 and after

Index	Code	Parts Name	Drawing No.	Type	Maker	Q'ty	Note
1	74379730	2" Die Holder	6570265			1	
2	10558427	Hex Soc Cap Screw	P330250014	M12X75		6	
3	74303703	Washer (M12)	0827014 B			6	
4	86610819	Spring Washer	P336050008	12		6	
5	74379731	2" Die Spacer	6570266			1	
6	21218020	Socket Set Screw	P330590054	M6X15(Dimple Type)		1	
7	75426232	Parallel Pin	P337048020	LC-BX10X28	NITTO SEIKO	2	
8	74563132	Ball Plunger	P338182011	BP-8-H	JEC	2	
9	74306001	Die Key	0488034 C			1	
10	74183324	Flat Head Screw	P334110030	M6X20		1	
11	74569824	Brush C-3S	6812866 A			4	

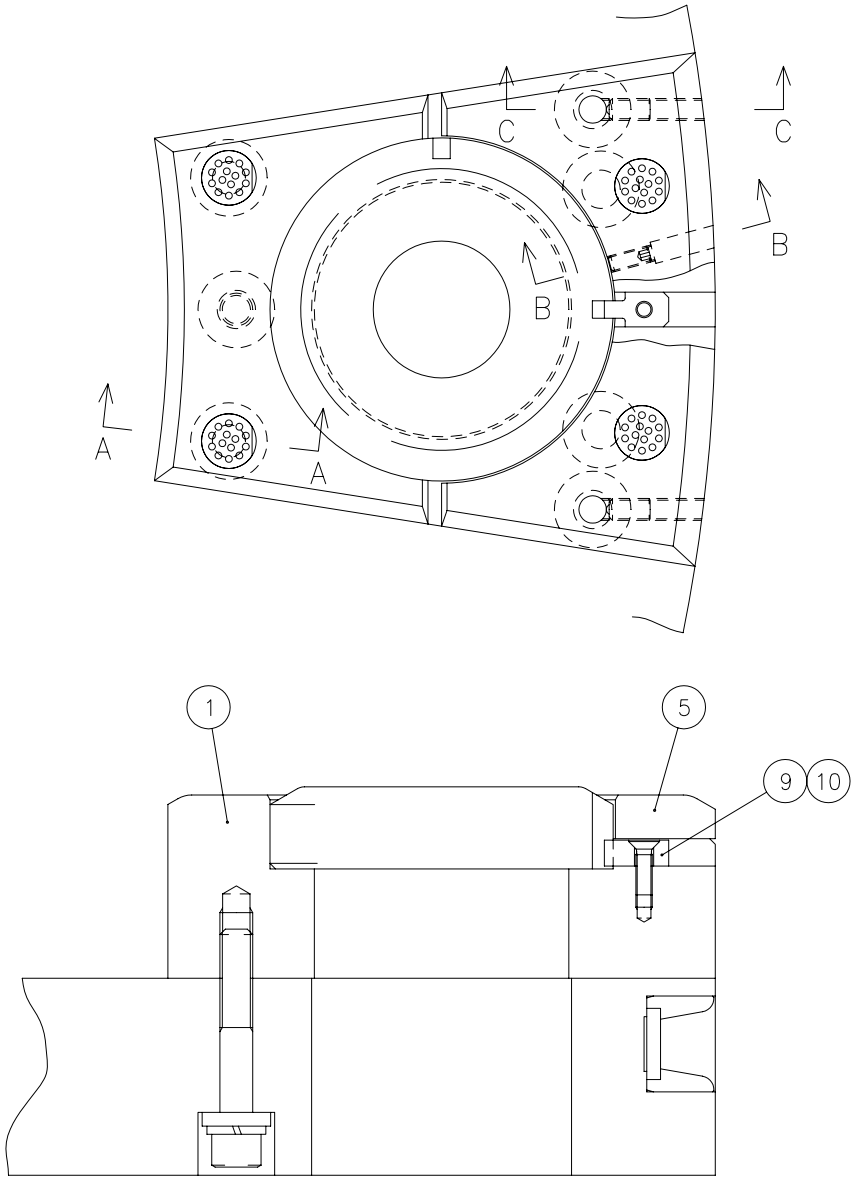

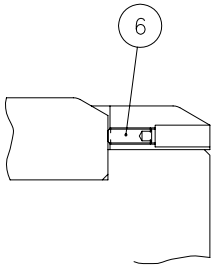

SECTION B–B

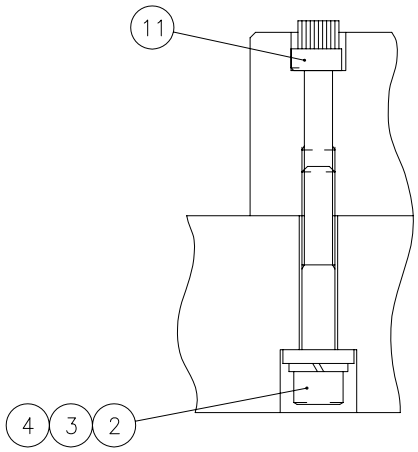

SECTION A–A

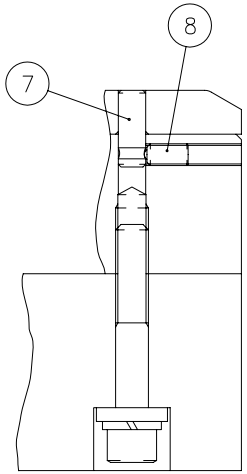

SECTION C–C

6877130

Unit No. 107

Turret B-PV(6) From Serial No.36102001 and after

Index	Code	Parts Name	Drawing No.	Type	Maker	Q'ty	Note
1	74379732	3-1/2" Die Holder	6570268			1	
2	10558427	Hex Soc Cap Screw	P330250014	M12X75		6	
3	74303703	Washer (M12)	0827014 B			6	
4	86610819	Spring Washer	P336050008	12		6	
5	74379733	3-1/2" Die Spacer	6570269			1	
6	21218020	Socket Set Screw	P330590054	M6X15(Dimple Type)		1	
7	75426232	Parallel Pin	P337048020	LC-BX10X28	NITTO SEIKO	2	
8	74563132	Ball Plunger	P338182011	BP-8-H	JEC	2	
9	74306001	Die Key	0488034 C			1	
10	74183324	Flat Head Screw	P334110030	M6X20		1	
11	74569824	Brush C-3S	6812866 A			4	

Turret B-PV(7) <4-1/2" Die Holder (For 2AI)>

From Serial No.36102001 and after

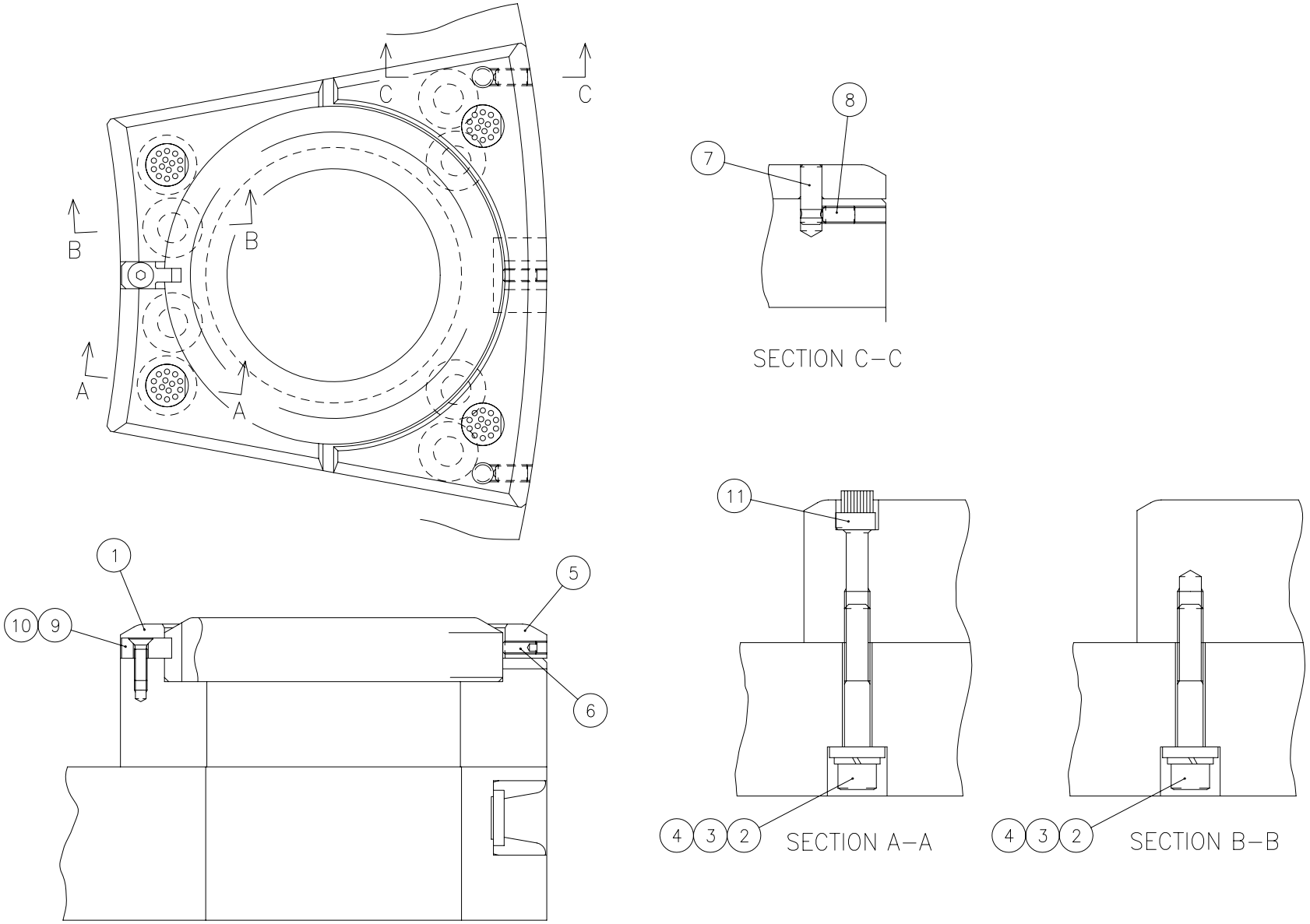

6877131

Unit No. 108

Turret B-PV(7) From Serial No.36102001 and after

Index	Code	Parts Name	Drawing No.	Type	Maker	Q'ty	Note
1	74382402	4-1/2" Die Holder	6570474 A			1	
2	10558427	Hex Soc Cap Screw	P330250014	M12X75		6	
3	74303703	Washer (M12)	0827014 B			6	
4	86610819	Spring Washer	P336050008	12		6	
5	74379738	4-1/2" Die Spacer	6570476			1	
6	21218020	Socket Set Screw	P330590054	M6X15(Dimple Type)		1	
7	75426232	Parallel Pin	P337048020	LC-BX10X28	NITTO SEIKO	2	
8	74563132	Ball Plunger	P338182011	BP-8-H	JEC	2	
9	74306001	Die Key	0488034 C			1	
10	74183324	Flat Head Screw	P334110030	M6X20		1	
11	74569824	Brush C-3S	6812866 A			4	

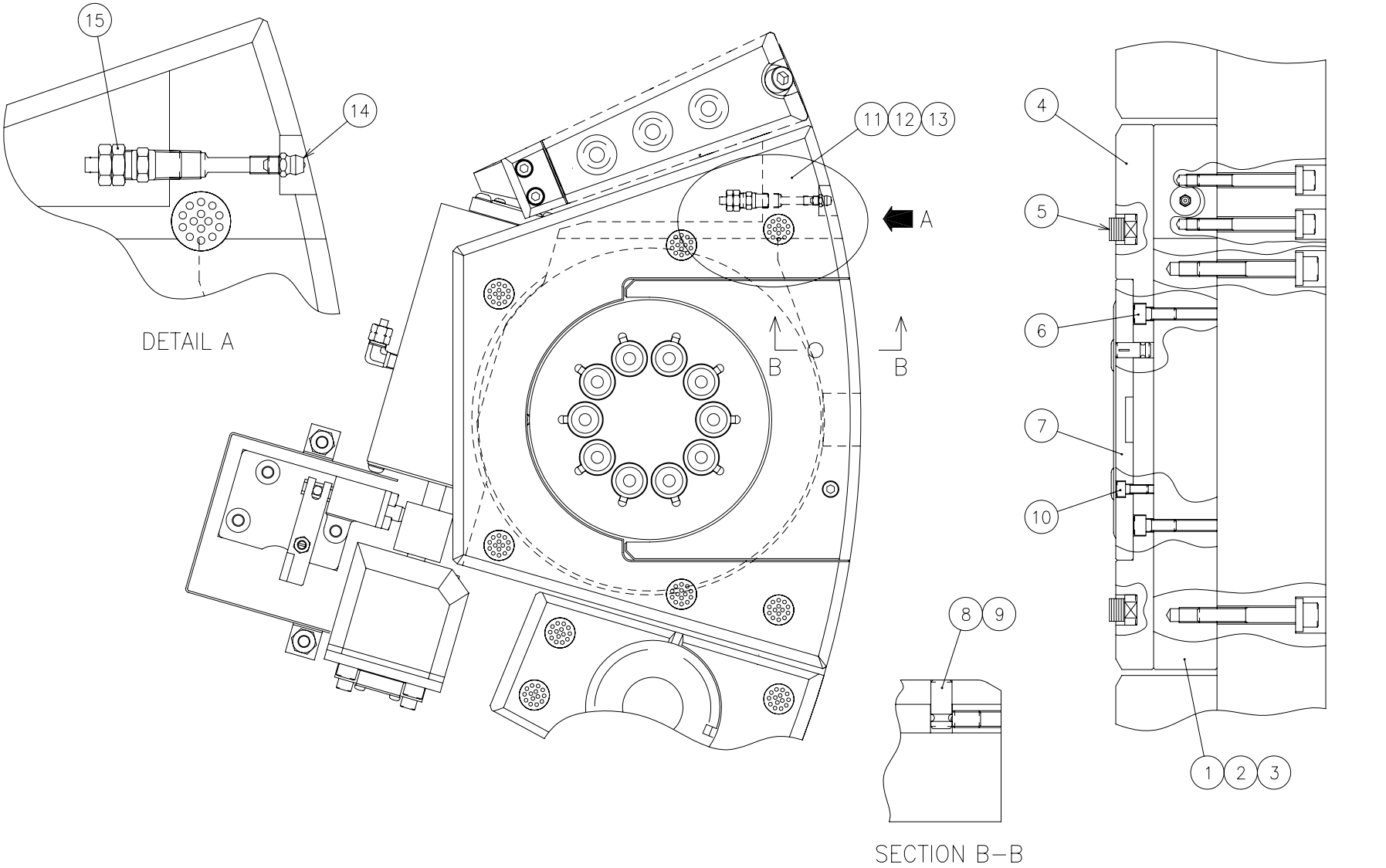
15
14
DETAIL A
11
12
13
A
B
B
4
5
6
7
10
8
9
1
2
3
SECTION B–B
6877185

Unit No. 109

Turret B-PV(8) From Serial No.36102001 and after

Index	Code	Parts Name	Drawing No.	Type	Maker	Q'ty	Note
1	74571437	4-1/2" Die Spacer (A)	6915287			1	
2	78180217	Hex Soc Cap Screw	P330240019	M10X85		3	
3	74306022	Washer (M10)	0827013 B			3	
4	74571438	4-1/2" Die Spacer (B)	6915288			1	
5	74569824	Brush C-3S	6812866 A			6	
6	79564804	Hex Soc Cap Screw	P330230006	M8X20		2	
7	74571439	4-1/2" Die Spacer (C)	6915289			1	
8	74379658	Grooved Pin	6570463			1	
9	74563132	Ball Plunger	P338182011	BP-8-H	JEC	1	
10	79564305	Hex Soc Cap Screw	P330220006	M6X15		1	
11	74571440	4-1/2" Die Spacer (D)	6915290			1	
12	10329641	Hex Soc Cap Screw	P330230019	M8X85		2	
13	74314204	Washer (M8)	0827367			2	
14	31179170	Grease Nipple	P560600002	A-MT6X1		1	
15	74379761	Bite Type Pipe Fitting	P585534027	C4N4X2-PT1/8	NITTA MOORE	1	

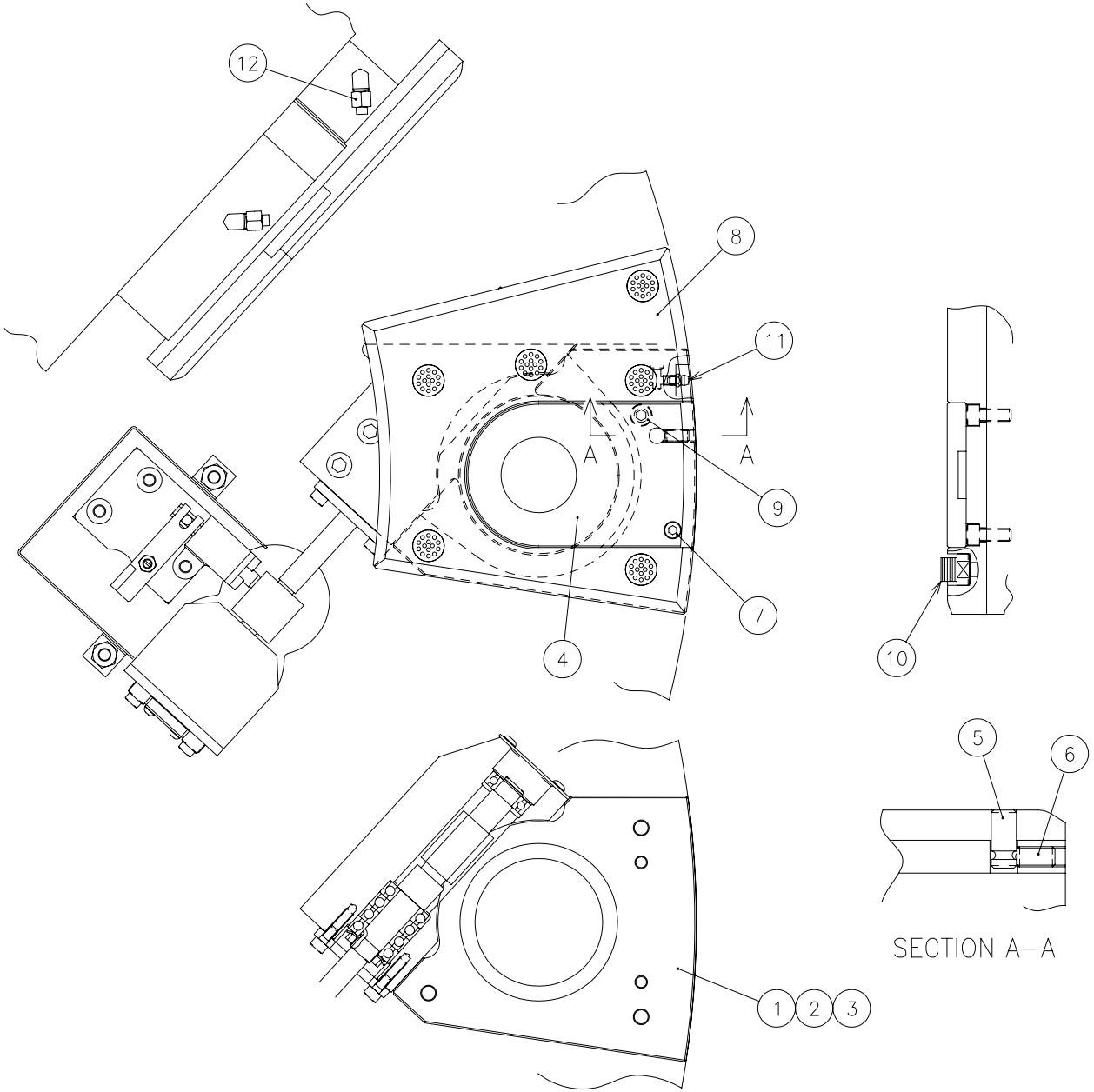

6877169

Unit No. 110

Turret B-PV(9) From Serial No.36102001 and after

Index	Code	Parts Name	Drawing No.	Type	Maker	Q'ty	Note
1	74571422	1-1/4" Die Spacer (A)	6915272			1	
2	74383549	Hex Soc Cap Screw	P330240016	M10X70		3	
3	74306022	Washer (M10)	0827013 B			3	
4	74572377	1-1/4" Die Spacer (B)	6915273 A			1	
5	74379658	Grooved Pin	6570463			1	
6	74563132	Ball Plunger	P338182011	BP-8-H	JEC	1	
7	79564305	Hex Soc Cap Screw	P330220006	M6X15		1	
8	74571424	1-1/4" Die Spacer (C)	6915274			1	
9	79564804	Hex Soc Cap Screw	P330230006	M8X20		2	
10	74569824	Brush C-3S	6812866 A			6	
11	31179170	Grease Nipple	P560600002	A-MT6X1		1	
12	74379661	Bite Type Pipe Fitting	P585564037	L4N4X2-PT1/8	NITTA MOORE	1	

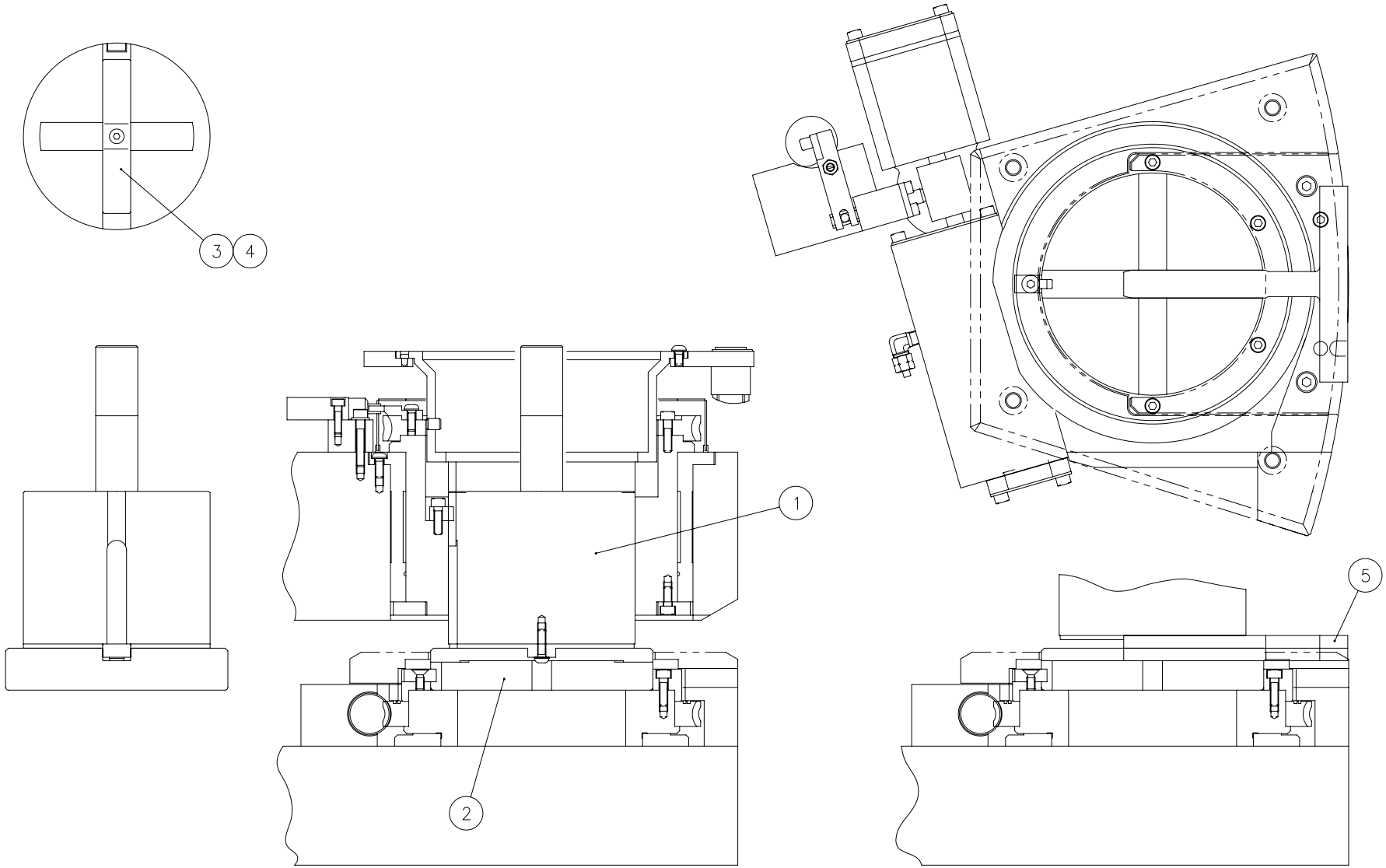

6532990B

Unit No. 111

Turret B-PV(10) From Serial No.36102001 and after

Index	Code	Parts Name	Drawing No.	Type	Maker	Q'ty	Note
1	74569422	Punch Jig (4-1/2")	6598471			1	
2	74387048	Die Jig (4-1/2")	6532992 A			1	
3	74379790	Key (4-1/2")	6532993			1	
4	74314603	Button Head Screw	P334500016	M6X20		1	
5	74569423	T-type Jig (4-1/2")	6532994 A			2	
6	74375830	T-Type Jig	6010633			1	List Only
7	36389505	Knob	P317264014	PC25X8B	IMAO Mfg	2	List Only
8	36326826	Hex Soc Cap Screw	P330230022	M8X100		2	Accessory (List Only)
9		Lubricating Oil	P238038001	GRP-SPRAY-0.3L	IWATANI Industry	1	Accessory (List Only)

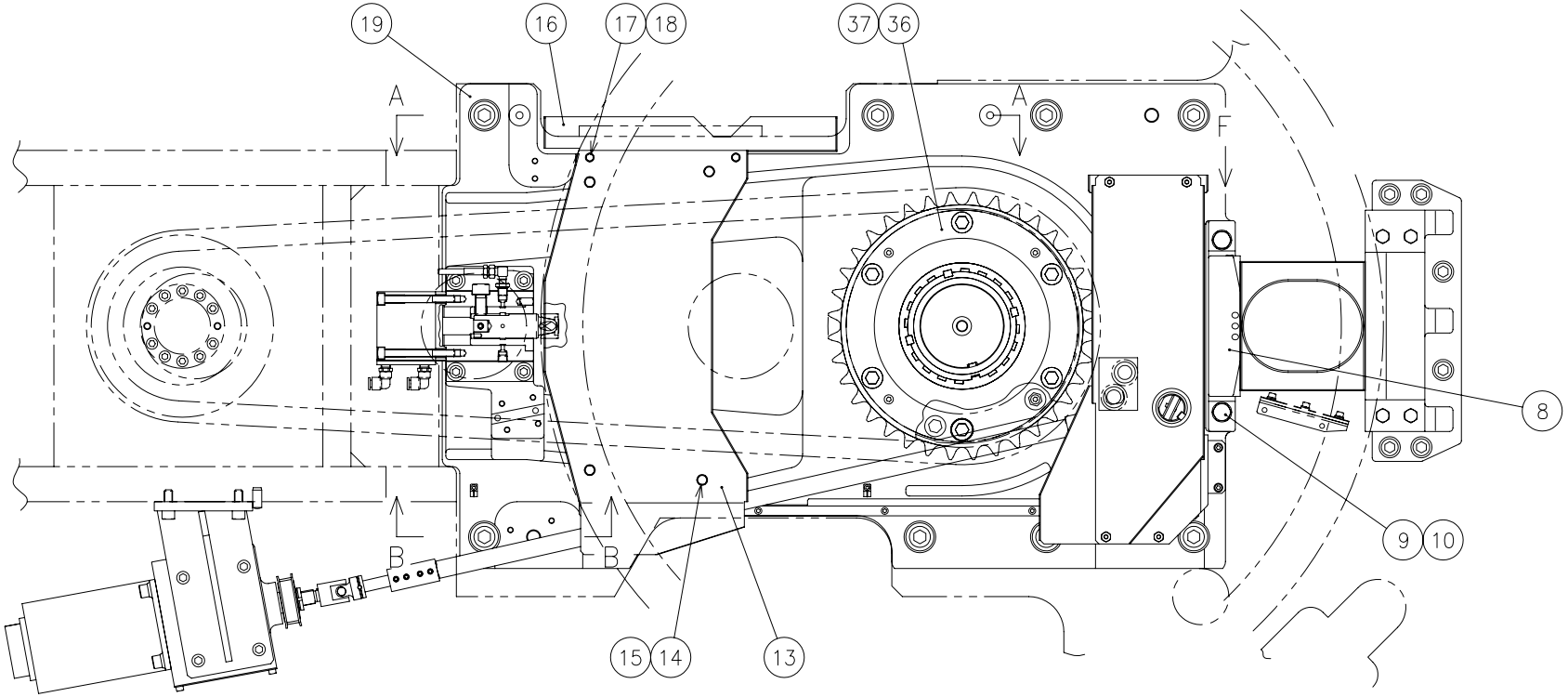

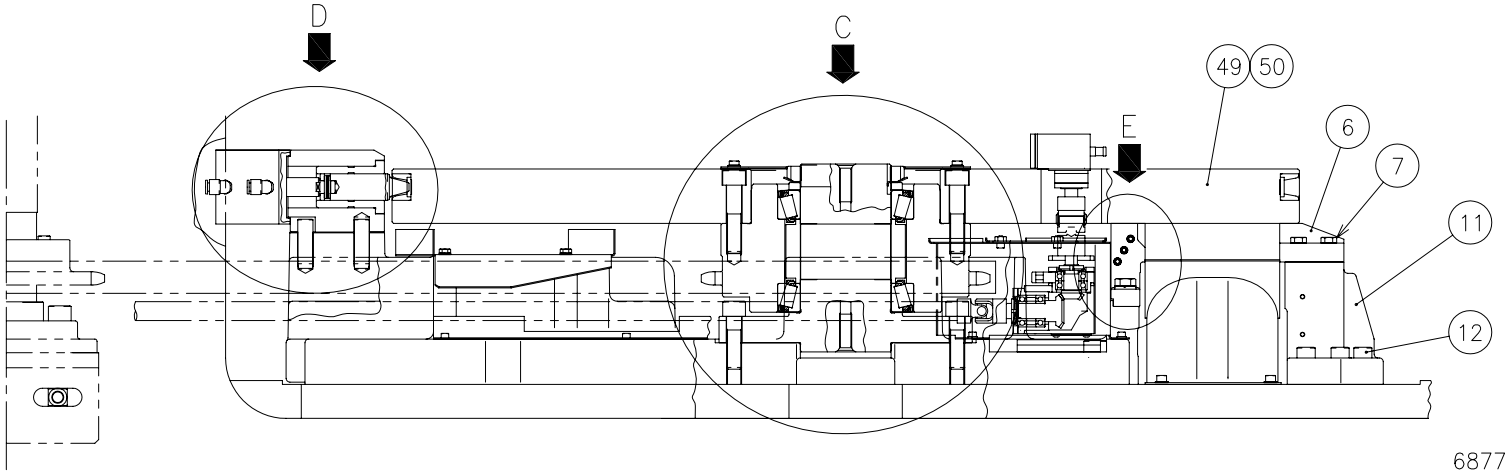

6877110#1
6877110#2

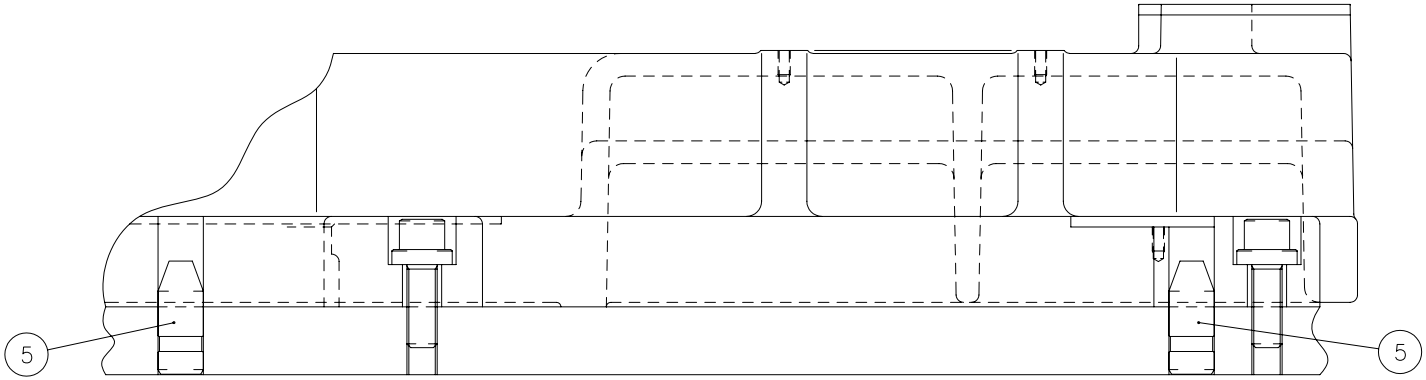

SECTION A–A

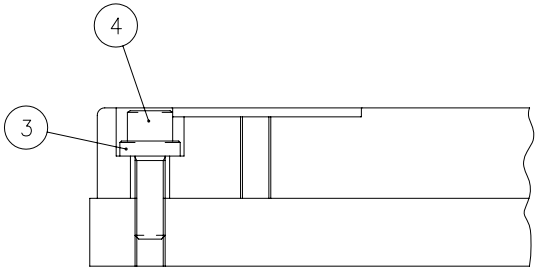

SECTION B–B

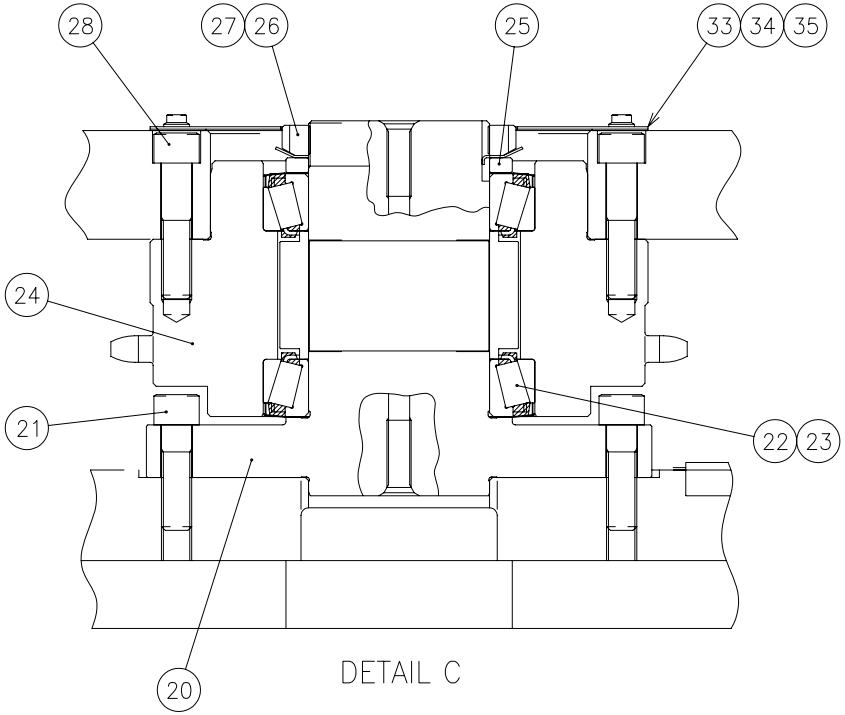

DETAIL C

6877110#1
6877110#2

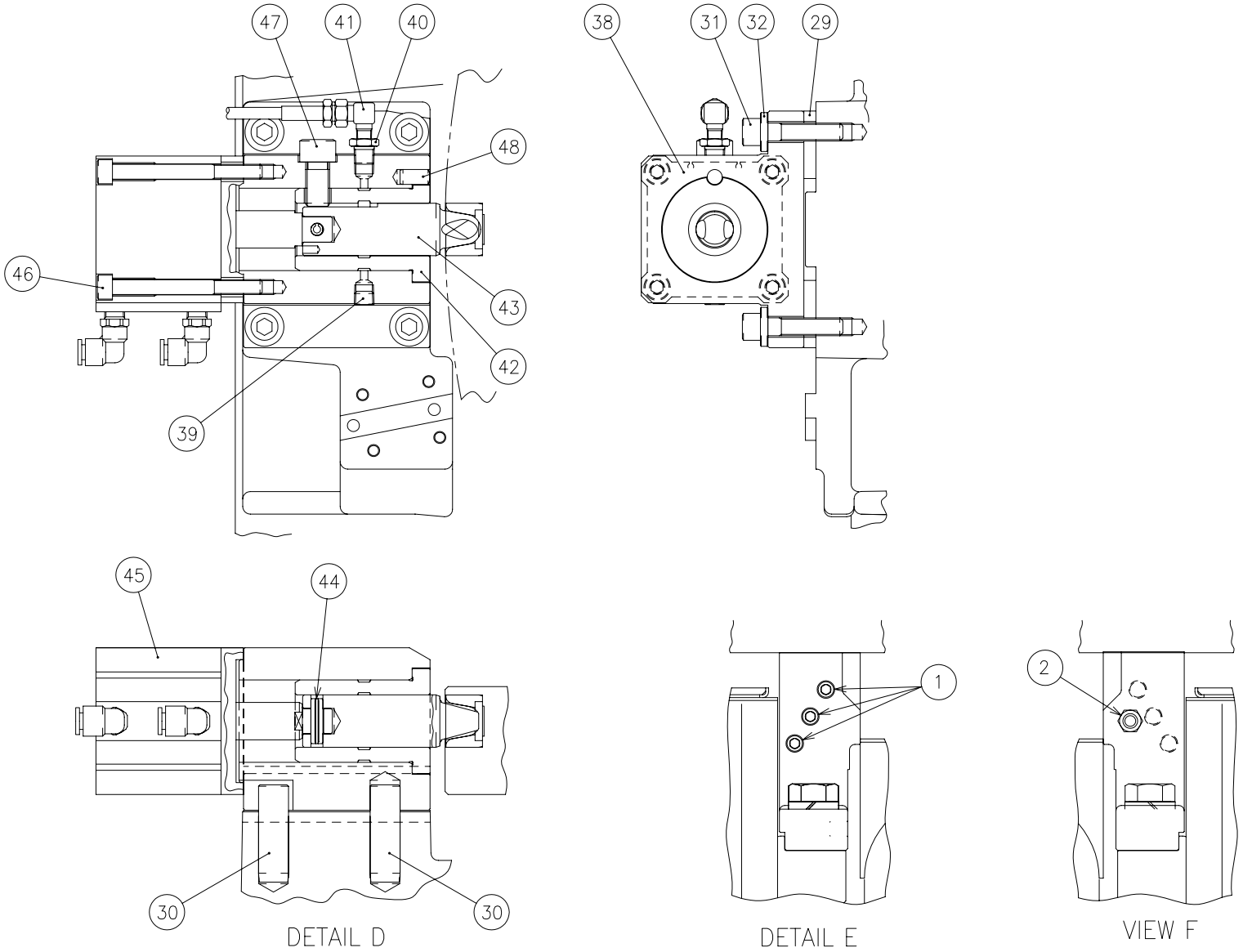

6877110#1
6877110#2

Index	Code	Parts Name	Drawing No.	Type	Maker	Q'ty	Note
1	74389708	Plug For Piping	P580208034	P10410	GOSHO Works	3	
2	74351914	Instant Fitting	P586534002	EC6-PT1/8	NITTA MOORE	1	
3	74301502	Washer	0821009 B			9	
4	71101346	Hex Soc Cap Screw	P330270008	M20X65		9	
5	74417827	Locating Pin	6874275			2	
6	74569665	Disk Support (Front)	6812584			1	
7	36147024	Bolt	P330050007	M12X50		4	
8	74418878	Disk Support (Rear)	6875489			1	
9	74303203	Bolt	P330060022	M16X55		2	
10	79566731	Spring Washer	P336050010	16		2	
11	74569666	Disk Support Block	6812585 B			1	
12	74535204	Hex Soc Cap Screw	P330260037	M16X65		6	
13	74569668	Scrap Receiver	6812588 A			1	
14	79567302	Bolt	P330030004	M8X15		4	
15	86610326	Spring Washer	P336050006	8		4	
16	74569669	Scrap Receiver Wing	6812589 A			1	
17	10442903	Bolt	P330020003	M6X12		2	
18	79564311	Spring Washer	P336050005	6		2	
19	74418896	Lower Base Assy	6875494			1	

Index	Code	Parts Name	Drawing No.	Type	Maker	Q'ty	Note
20	74419338	Bearing Shaft (Lower)	6812557			1	
21	71357839	Hex Soc Cap Screw	P330270009	M20X70		6	
22	74569663	Roller Bearing Set	7830623 A	HR32024XJL11DB	NSK	1	
23	74303127	Shield Plate	P406188005	32024XAV	FUKUDA	2	
24	74419339	Bearing Housing (Lower)	6812558			1	
25	74379119	Collar	6530298			1	
26	74563668	Crown Nut	0811674 A			1	
27	74303123	Lock Washer	P406040019	AW-24		1	
28	74722722	Hex Soc Cap Screw	P330270011	M20X80		6	
29	74577424	Spacer	6812556			2	
30	74389710	Parallel Pin	P337055079	DPS-A20-65	OKITA	2	
31	74304914	Hex Soc Cap Screw	P330250010	M12X55		4	
32	74303703	Washer (M12)	0827014 B			4	
33	74569675	Bearing Cover	6812595			1	
34	74569676	Cover Seal	6812596			1	
35	74382078	Flange Socket Bolt	P330468006	M8X15	NISSAN NEJI	4	
36	74386826	Driven Sprocket	6593831			1	
37	36322123	Hex Soc Cap Screw	P330270004	M20X45		6	
38	74569659	Index Pin Housing	6812587 A			1	

Index	Code	Parts Name	Drawing No.	Type	Maker	Q'ty	Note
39	74389708	Plug For Piping	P580208034	P10410	GOSHO Works	1	
40	74722884	Bush For Piping	P580013001	M-1/4X1/8	BAN SS	1	
41	74722994	Hose Adapter	P589223029	8021RG02	BRIDGESTON	1	
42	74379122	Index Pin Bushing	6530302			1	
43	74379123	Index Pin	6530303 B			1	
44	74722785	Spring Pin	P337030080	8X30		1	
45	74417845	Air Cylinder (Compact Type)	7831566	CDQ2B80-30-DCH5905H	SMC	1	
46	74381569	Hex Soc Cap Screw	P330240022	M10X100		4	
47	74389709	Bolt	6572869 A			1	
48	75428631	Parallel Pin	P337020056	A-10X20		1	
49	74419340	70ST Lower Turret Disk	6877113			1	2AI
49	74419341	58ST Lower Turret Disk	6877142			1	4AI
50	74302104	Bushing	0480336 K			34	2AI
50	74302104	Bushing	0480336 K			30	4AI

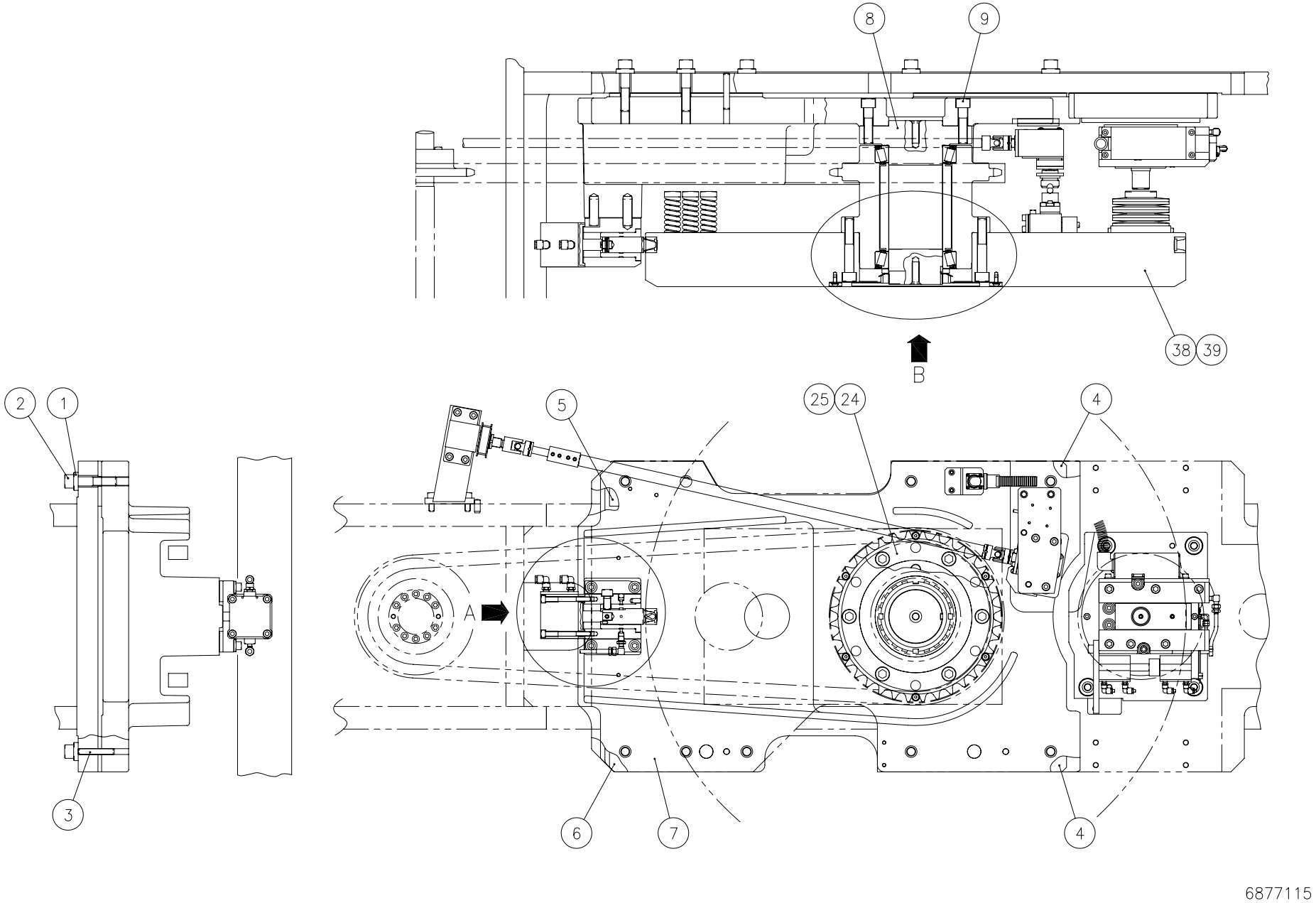
8
9
38
39
B
2
1
5
25
24
4
A
3
6
7
4
6877115

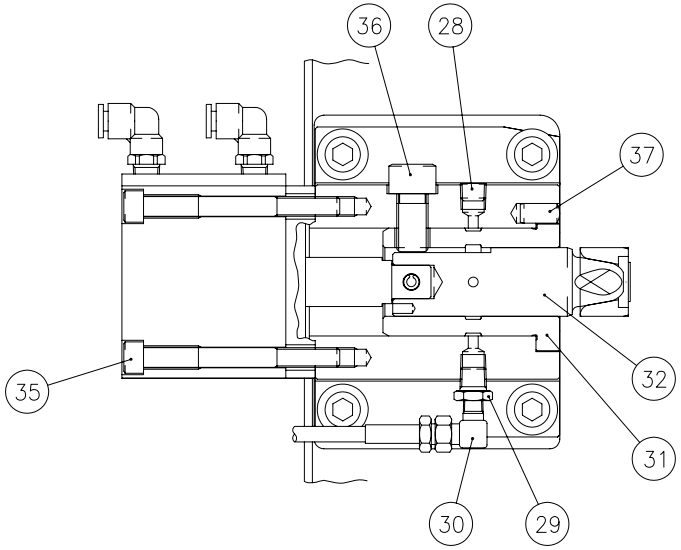

DETAIL A

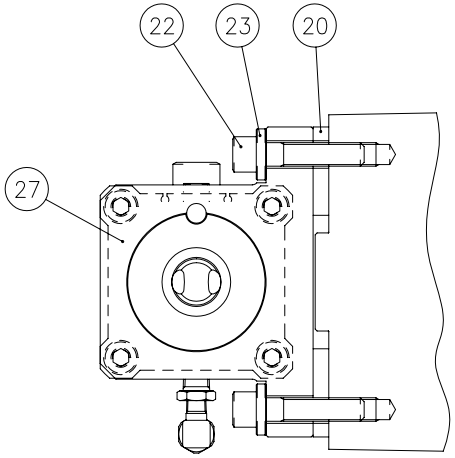

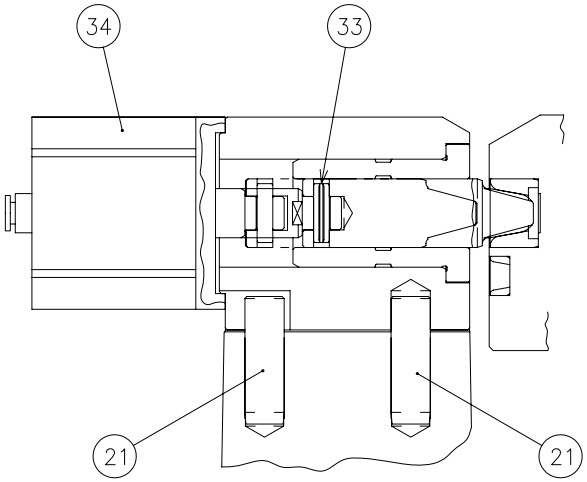

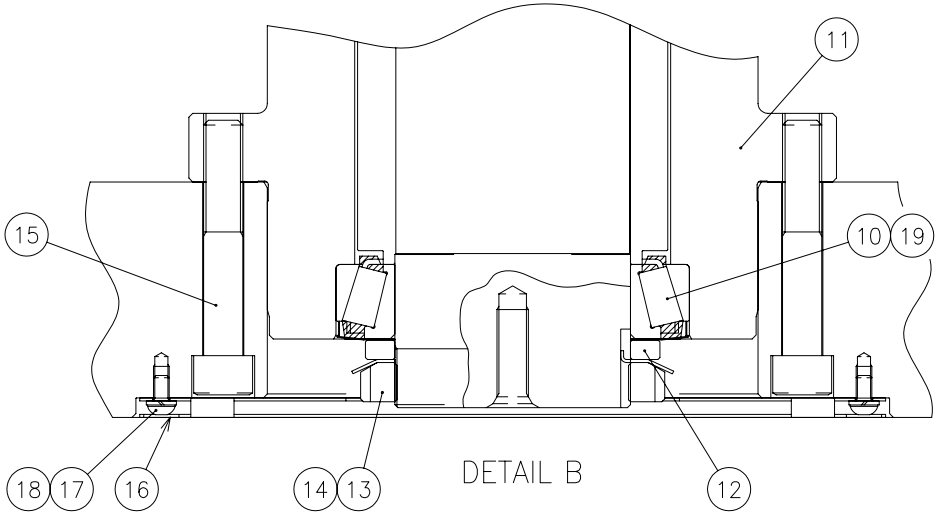

DETAIL B

6877115

Index	Code	Parts Name	Drawing No.	Type	Maker	Q'ty	Note
1	74301502	Washer	0821009 B			9	
2	36618103	Hex Soc Cap Screw	P330270013	M20X90		9	
3	74415408	Parallel Pin	P337054103	MSTM13-80	MISUMI	2	
4	74569654	Spacer (A)	6812554			2	
5	74569655	Spacer (B)	6812555			1	
6	74419342	Spacer (C)	6877116			1	
7	74419343	Upper Base Assy	6877119			1	
8	74569656	Bearing Shaft (Upper)	6812552 A			1	
9	74722722	Hex Soc Cap Screw	P330270011	M20X80		8	
10	74569657	Roller Bearing Set	7830622 A	HR32024XJL11DB	NSK	1	
11	74379117	Bearing Housing (Upper)	6530296			1	
12	74379119	Collar	6530298			1	
13	74563668	Crown Nut	0811674 A			1	
14	74303123	Lock Washer	P406040019	AW-24		1	
15	31172405	Hex Soc Cap Screw	P330270017	M20X120		6	
16	74379120	Cap	6530299 A			1	
17	10569021	Button Head Screw	P334500019	M8X15		6	
18	86610326	Spring Washer	P336050006	8		6	
19	74303127	Shield Plate	P406188005	32024XAV	FUKUDA	2	

Index	Code	Parts Name	Drawing No.	Type	Maker	Q'ty	Note
20	74577424	Spacer	6812556			2	
21	74389710	Parallel Pin	P337055079	DPS-A20-65	OKITA	2	
22	74304914	Hex Soc Cap Screw	P330250010	M12X55		4	
23	74303703	Washer (M12)	0827014 B			4	
24	74386826	Driven Sprocket	6593831			1	
25	36322123	Hex Soc Cap Screw	P330270004	M20X45		6	
26	74702340	Plug For Piping	P580208001	GM-1/8	GOSHO Works	1	List Only
27	74569659	Index Pin Housing	6812587 A			1	
28	74389708	Plug For Piping	P580208034	P10410	GOSHO Works	1	
29	74722884	Bush For Piping	P580013001	M-1/4X1/8	BAN SS	1	
30	74722994	Hose Adapter	P589223029	8021RG02	BRIDGESTON	1	
31	74379122	Index Pin Bushing	6530302			1	
32	74379123	Index Pin	6530303 B			1	
33	74722785	Spring Pin	P337030080	8X30		1	
34	74417845	Air Cylinder (Compact Type)	7831566	CDQ2B80-30-DCH5905H	SMC	1	
35	74381569	Hex Soc Cap Screw	P330240022	M10X100		4	
36	74389709	Bolt	6572869 A			1	
37	75428631	Parallel Pin	P337020056	A-10X20		1	
38	74575626	70ST Upper Turret Disk	6811080			1	2AI

From Serial No.36102001 and after

Index	Code	Parts Name	Drawing No.	Type	Maker	Q'ty	Note
38	74571410	58ST Upper Turret Disk	6811082 A			1	4AI
39	74302104	Bushing	0480336 K			34	2AI
39	74302104	Bushing	0480336 K			30	4AI

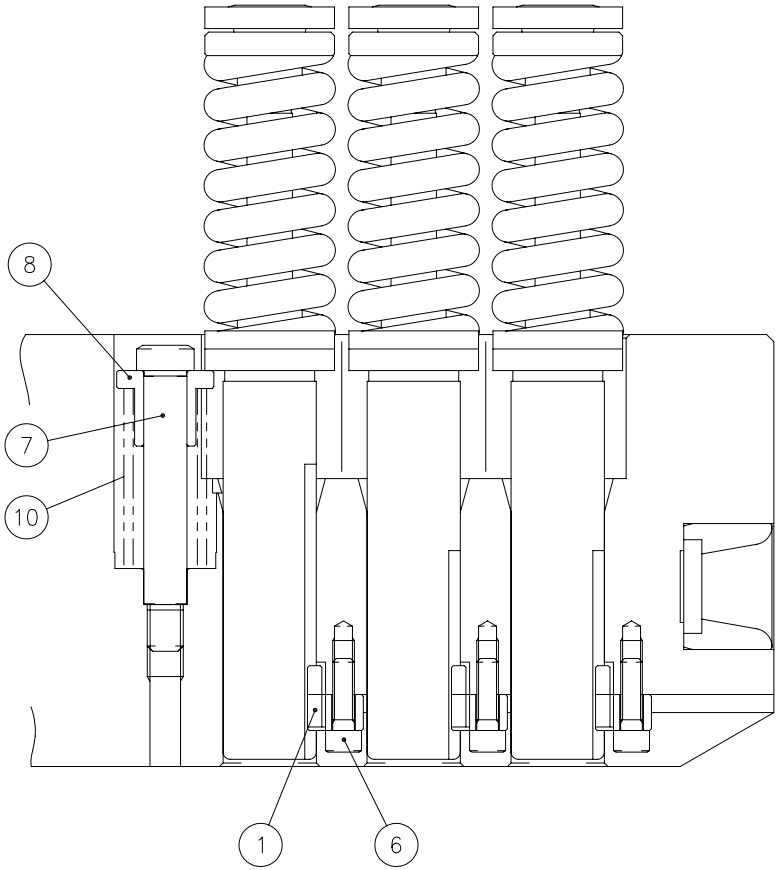

<1/2">

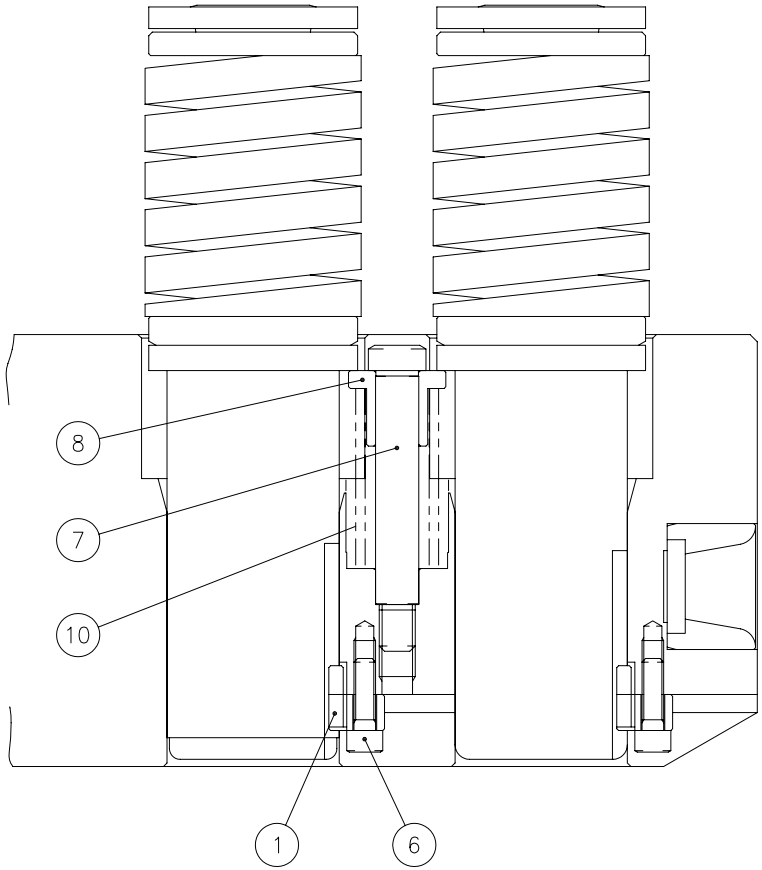

<1−1/4">

6812836
6812837

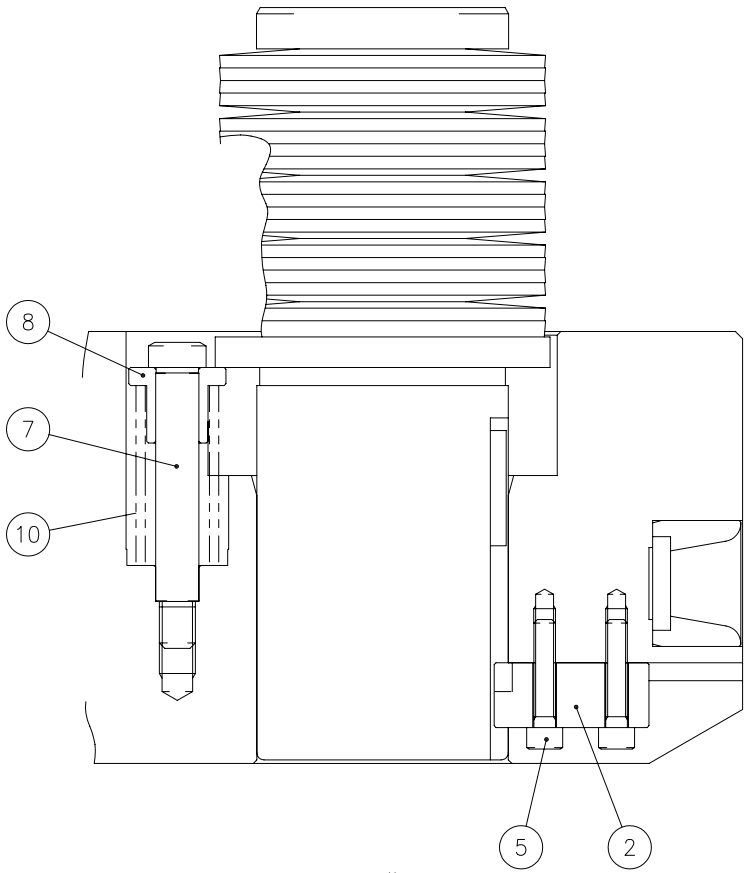

<2">

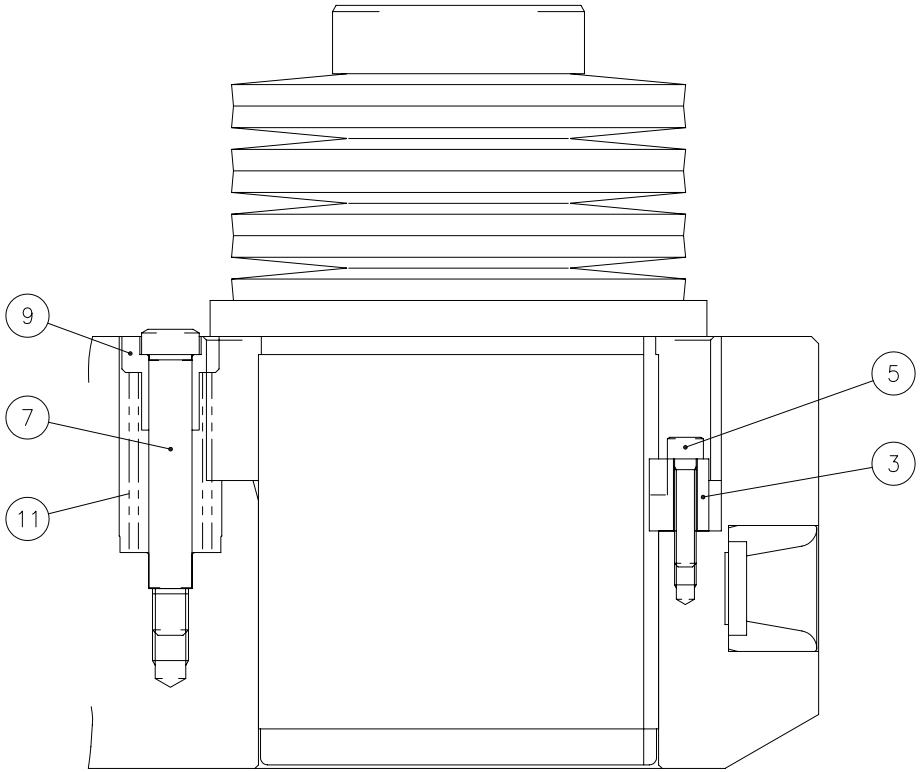

<3-1/2">

6812834
6812835

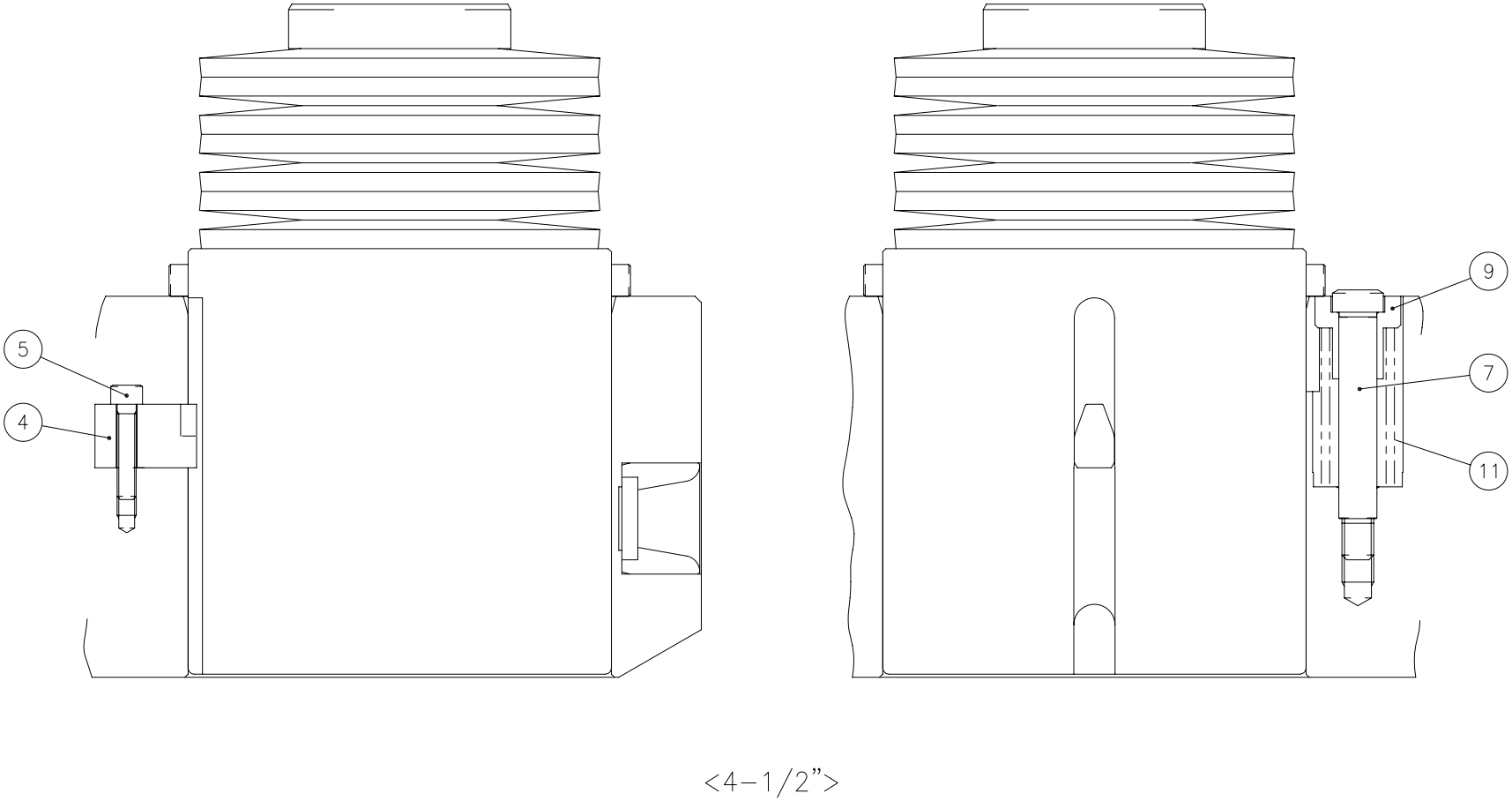

6812833

Index	Code	Parts Name	Drawing No.	Type	Maker	Q'ty	Note
1	74569848	1/2" Guide Key	3008133			48	2AI
1	74569848	1/2" Guide Key	3008133			40	4AI
2	74569850	2" Guide Key	6812864			4	
3	74569852	3-1/2" Guide Key	6812865			2	
4	74561406	4-1/2" Guide Key	7400914 B			2	2AI
5	86213043	Hex Soc Cap Screw	P330220012	M6X30		12	2AI
5	86213043	Hex Soc Cap Screw	P330220012	M6X30		10	4AI
6	79567722	Hex Soc Cap Screw	P330220009	M6X20		48	2AI
6	79567722	Hex Soc Cap Screw	P330220009	M6X20		40	4AI
7	74569846	Shoulder Screw	3204978			118	2AI
7	74569846	Shoulder Screw	3204978			96	4AI
8	74306004	Lifter Collar	5500217 B			102	2AI
8	74306004	Lifter Collar	5500217 B			88	4AI
9	74306014	Lifter Ring	5501009 C			16	2AI
9	74306014	Lifter Ring	5501009 C			8	4AI
10	74569847	Spring (1/2",1-1/4",2")	3200854			90	2AI
10	74569847	Spring (1/2",1-1/4",2")	3200854			79	4AI
11	74569851	Spring (3-1/2",4-1/2")	3204979 A			28	2AI
11	74569851	Spring (3-1/2",4-1/2")	3204979 A			17	4AI

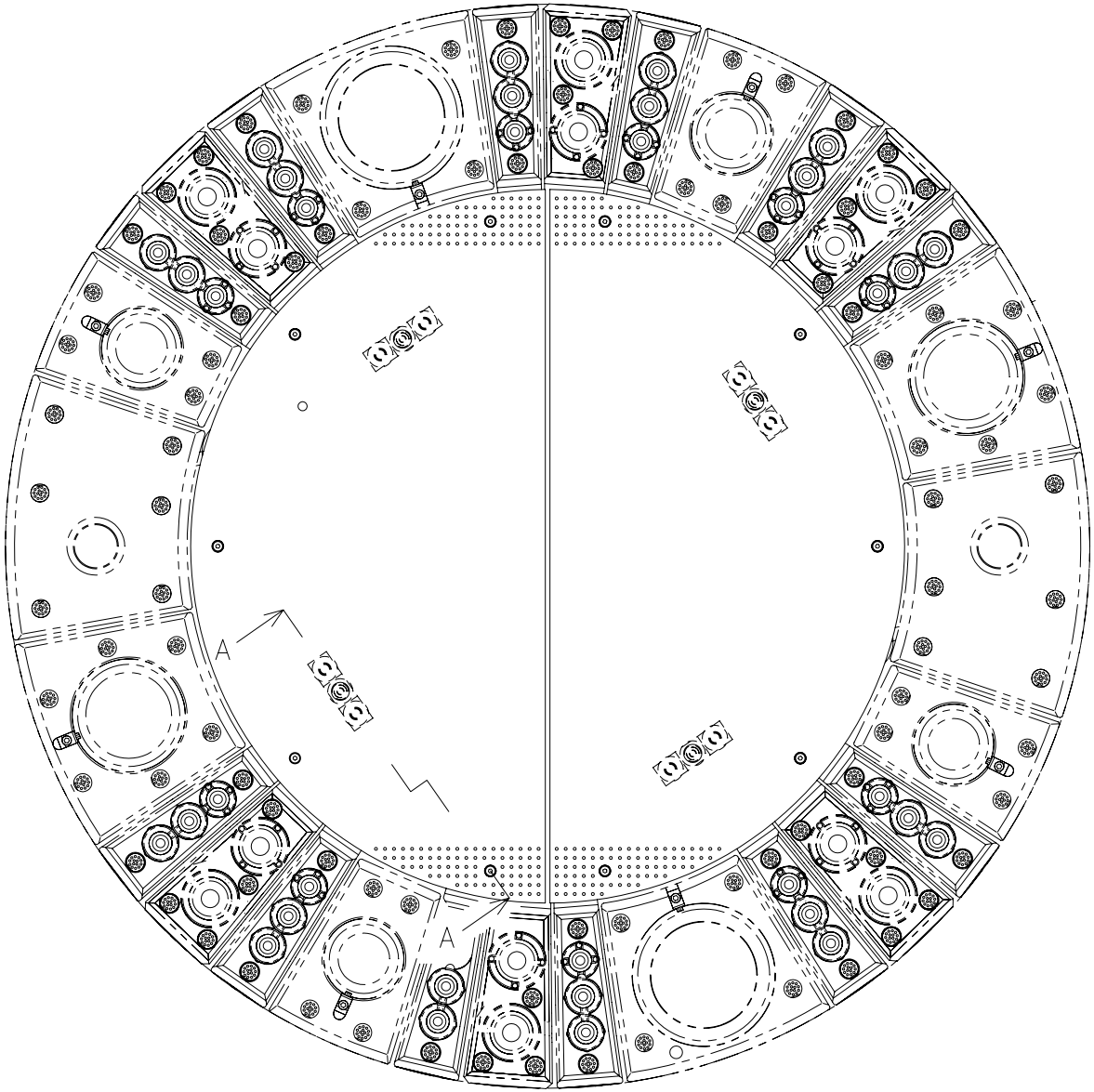

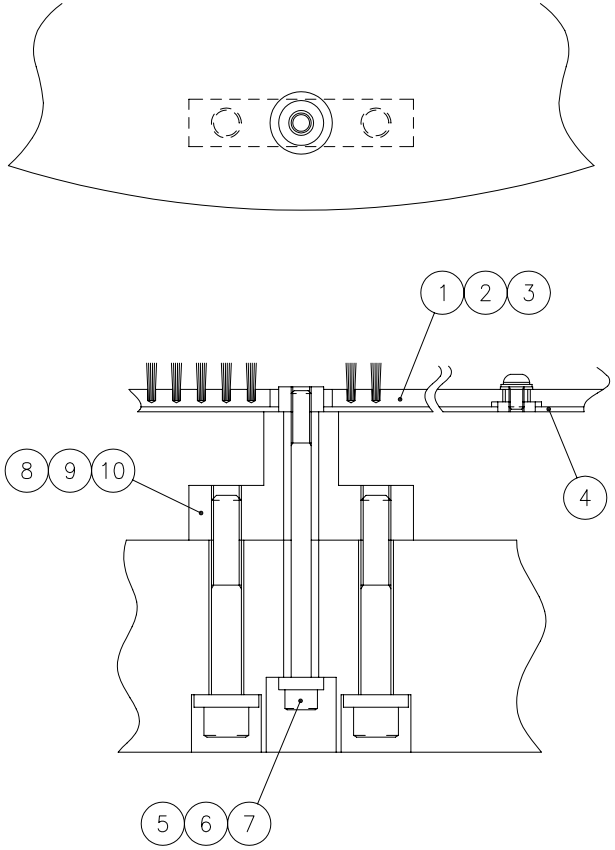

6875490

Unit No. 115

Turret B-P&F(4) From Serial No.36102001 and after

Index	Code	Parts Name	Drawing No.	Type	Maker	Q'ty	Note
1	74418882	MDF Brush (Support Plate)	6875491			2	2AI
1	74419344	MDF Brush (Support Plate)	6877148			2	4AI
2	36379029	Button Head Screw	P334500013	M6X10		10	
3	79565419	Washer	P336000005	6(Regular Round)		10	
4	74418883	Brush Setting Plate	6875492			1	2AI
4	74419345	Brush Setting Plate	6877149			1	4AI
5	74707962	Hex Soc Cap Screw	P330230026	M8X120		4	2AI
5	79316161	Hex Soc Cap Screw	P330230024	M8X110		4	4AI
6	74314204	Washer (M8)	0827367			4	
7	86610326	Spring Washer	P336050006	8		4	4AI
8	74379721	Support Block	6530319 C			4	
9	52332453	Hex Soc Cap Screw	P330250016	M12X85		8	2AI
9	10558427	Hex Soc Cap Screw	P330250014	M12X75		8	4AI
10	74303703	Washer (M12)	0827014 B			8	

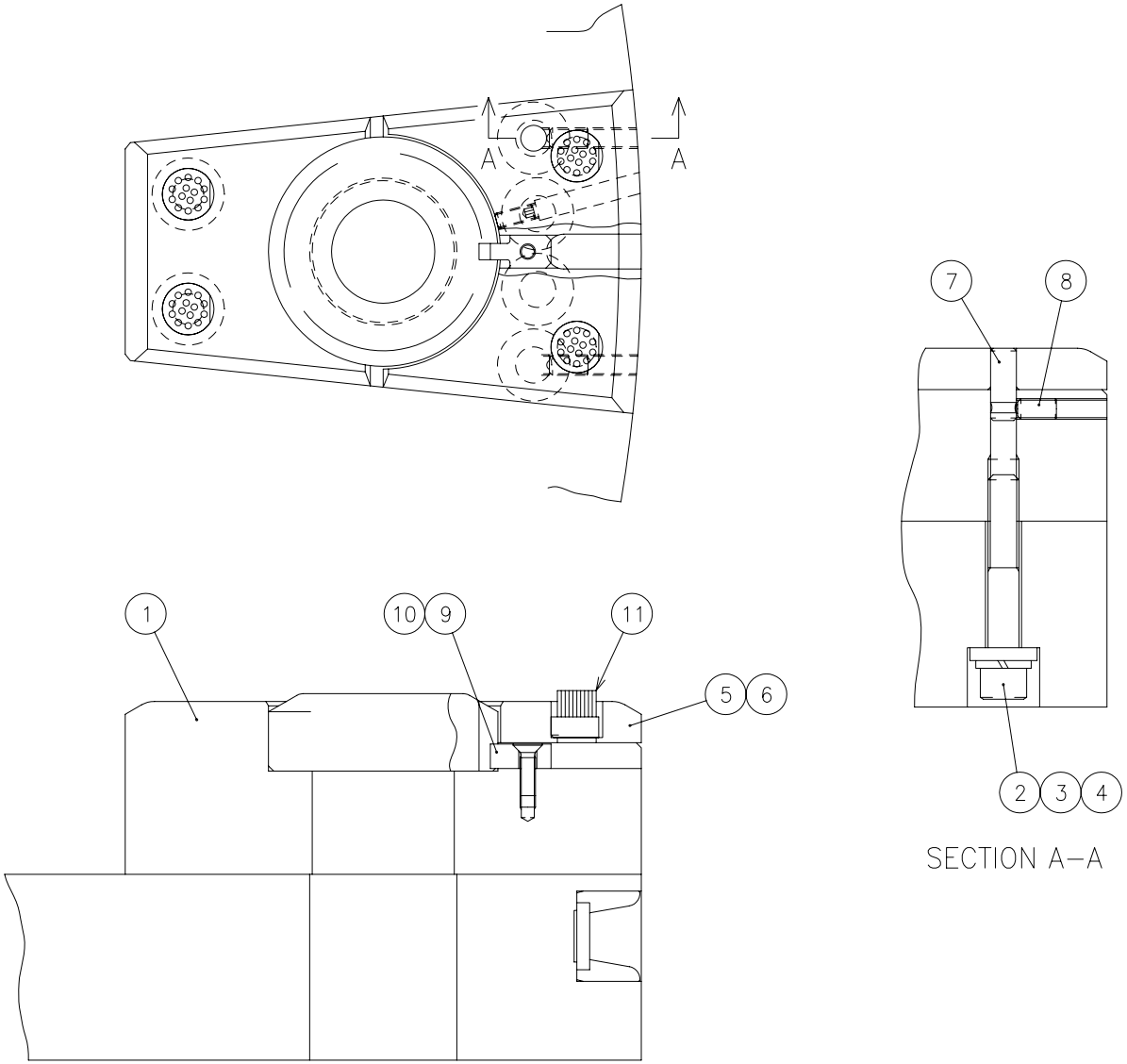

6877129

Unit No. 116

Turret B-P&F(5)

From Serial No.36102001 and after

Index	Code	Parts Name	Drawing No.	Type	Maker	Q'ty	Note
1	74379730	2" Die Holder	6570265			1	
2	10558427	Hex Soc Cap Screw	P330250014	M12X75		6	
3	74303703	Washer (M12)	0827014 B			6	
4	86610819	Spring Washer	P336050008	12		6	
5	74379731	2" Die Spacer	6570266			1	
6	21218020	Socket Set Screw	P330590054	M6X15(Dimple Type)		1	
7	75426232	Parallel Pin	P337048020	LC-BX10X28	NITTO SEIKO	2	
8	74563132	Ball Plunger	P338182011	BP-8-H	JEC	2	
9	74306001	Die Key	0488034 C			1	
10	74183324	Flat Head Screw	P334110030	M6X20		1	
11	74569824	Brush C-3S	6812866 A			4	

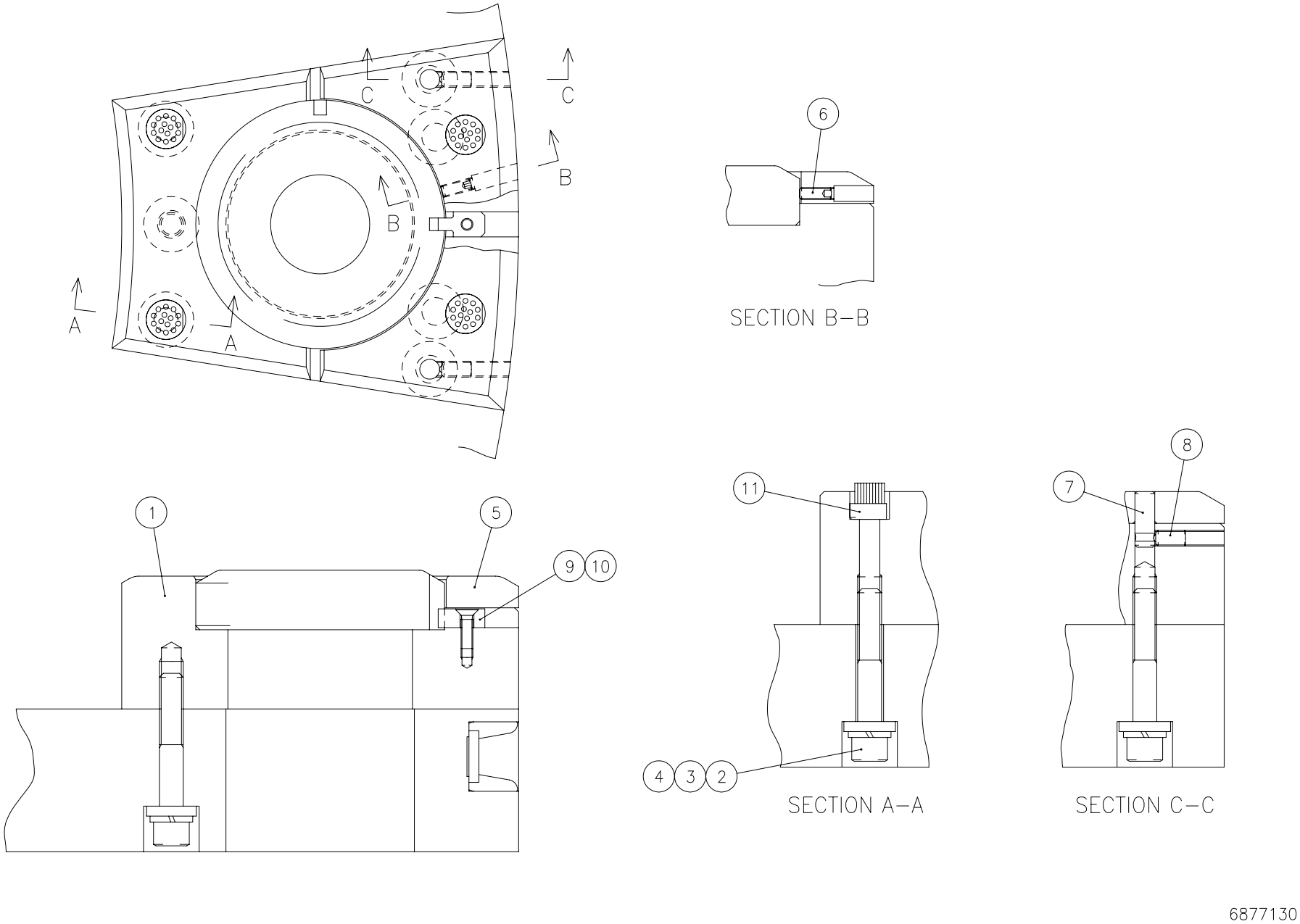
C
C
B
B
A
A
6
SECTION B–B
1
5
9
10
11
8
7
4
3
2
SECTION A–A
SECTION C–C
6877130

Unit No. 117

Turret B-P&F(6)

From Serial No.36102001 and after

Index	Code	Parts Name	Drawing No.	Type	Maker	Q'ty	Note
1	74379732	3-1/2" Die Holder	6570268			1	
2	10558427	Hex Soc Cap Screw	P330250014	M12X75		6	
3	74303703	Washer (M12)	0827014 B			6	
4	86610819	Spring Washer	P336050008	12		6	
5	74379733	3-1/2" Die Spacer	6570269			1	
6	21218020	Socket Set Screw	P330590054	M6X15(Dimple Type)		1	
7	75426232	Parallel Pin	P337048020	LC-BX10X28	NITTO SEIKO	2	
8	74563132	Ball Plunger	P338182011	BP-8-H	JEC	2	
9	74306001	Die Key	0488034 C			1	
10	74183324	Flat Head Screw	P334110030	M6X20		1	
11	74569824	Brush C-3S	6812866 A			4	

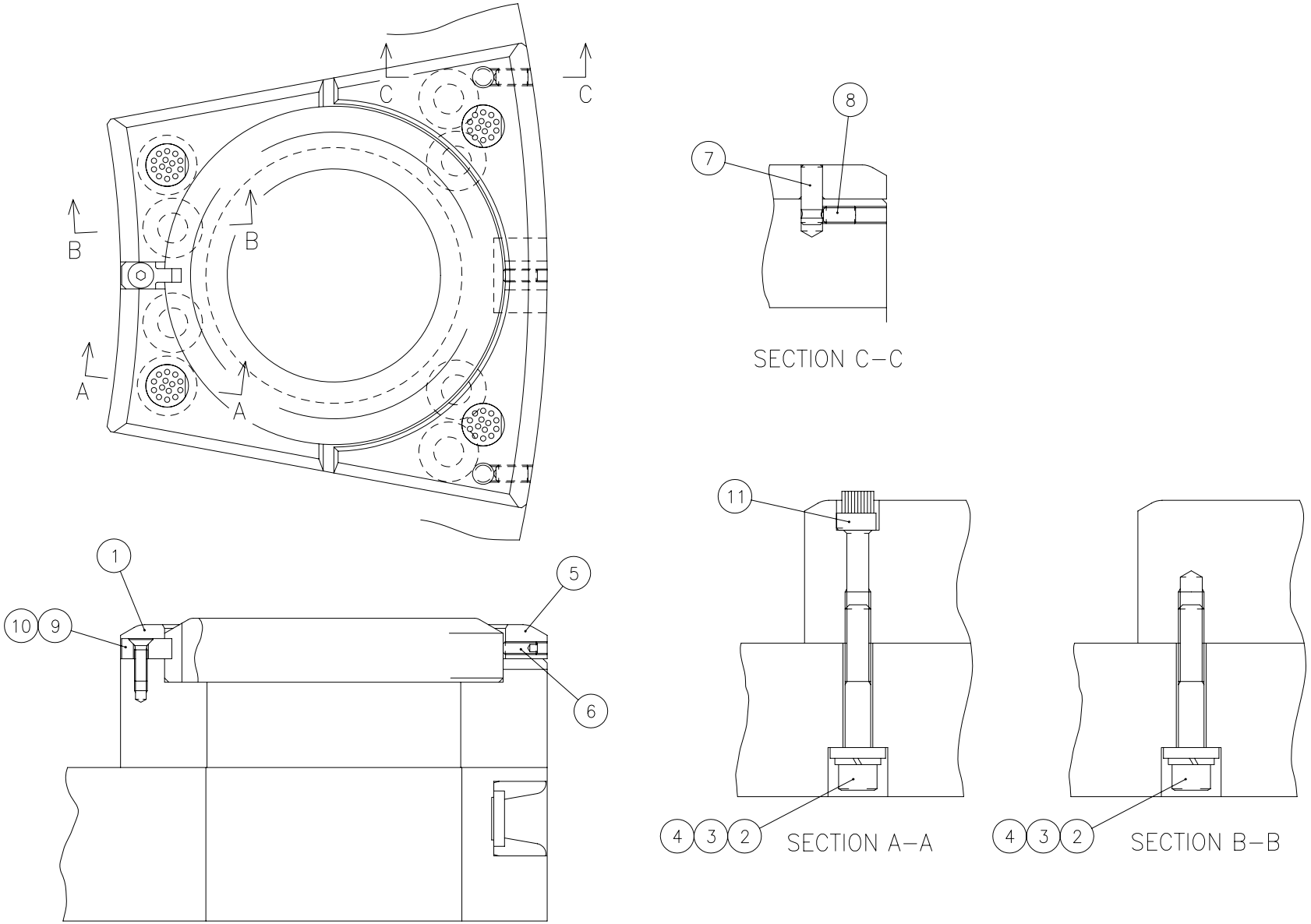

6877131

Unit No. 118

Turret B-P&F(7)

From Serial No.36102001 and after

Index	Code	Parts Name	Drawing No.	Type	Maker	Q'ty	Note
1	74382402	4-1/2" Die Holder	6570474 A			1	
2	10558427	Hex Soc Cap Screw	P330250014	M12X75		6	
3	74303703	Washer (M12)	0827014 B			6	
4	86610819	Spring Washer	P336050008	12		6	
5	74379738	4-1/2" Die Spacer	6570476			1	
6	21218020	Socket Set Screw	P330590054	M6X15(Dimple Type)		1	
7	75426232	Parallel Pin	P337048020	LC-BX10X28	NITTO SEIKO	2	
8	74563132	Ball Plunger	P338182011	BP-8-H	JEC	2	
9	74306001	Die Key	0488034 C			1	
10	74183324	Flat Head Screw	P334110030	M6X20		1	
11	74569824	Brush C-3S	6812866 A			4	

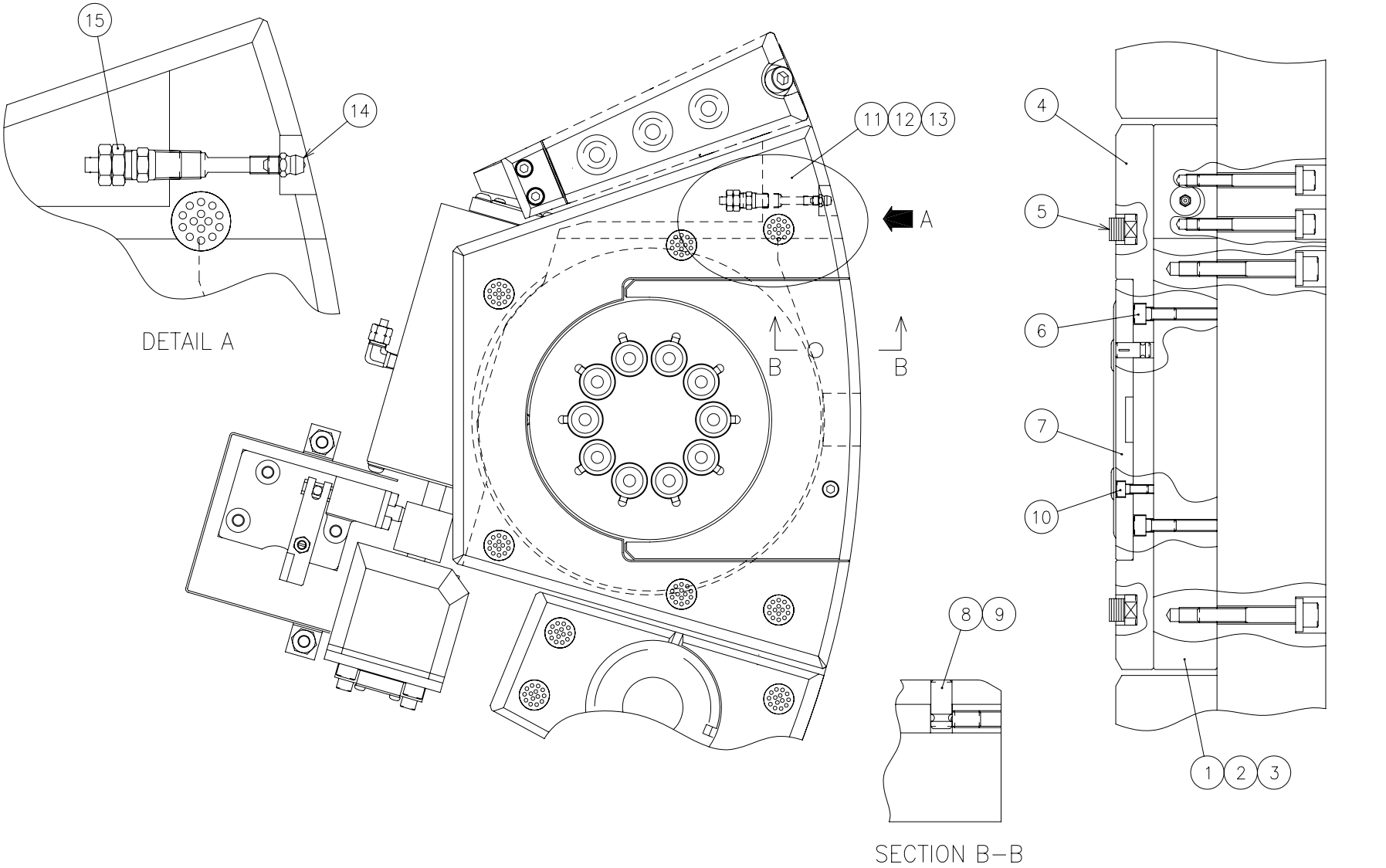
15
14
DETAIL A
11
12
13
A
B
B
4
5
6
7
10
8
9
1
2
3
SECTION B–B
6877185

Unit No. 119

Turret B-P&F(8) From Serial No.36102001 and after

Index	Code	Parts Name	Drawing No.	Type	Maker	Q'ty	Note
1	74571437	4-1/2" Die Spacer (A)	6915287			1	
2	78180217	Hex Soc Cap Screw	P330240019	M10X85		3	
3	74306022	Washer (M10)	0827013 B			3	
4	74571438	4-1/2" Die Spacer (B)	6915288			1	
5	74569824	Brush C-3S	6812866 A			6	
6	79564804	Hex Soc Cap Screw	P330230006	M8X20		2	
7	74571439	4-1/2" Die Spacer (C)	6915289			1	
8	74379658	Grooved Pin	6570463			1	
9	74563132	Ball Plunger	P338182011	BP-8-H	JEC	1	
10	79564305	Hex Soc Cap Screw	P330220006	M6X15		1	
11	74571440	4-1/2" Die Spacer (D)	6915290			1	
12	10329641	Hex Soc Cap Screw	P330230019	M8X85		2	
13	74314204	Washer (M8)	0827367			2	
14	31179170	Grease Nipple	P560600002	A-MT6X1		1	
15	74379761	Bite Type Pipe Fitting	P585534027	C4N4X2-PT1/8	NITTA MOORE	1	

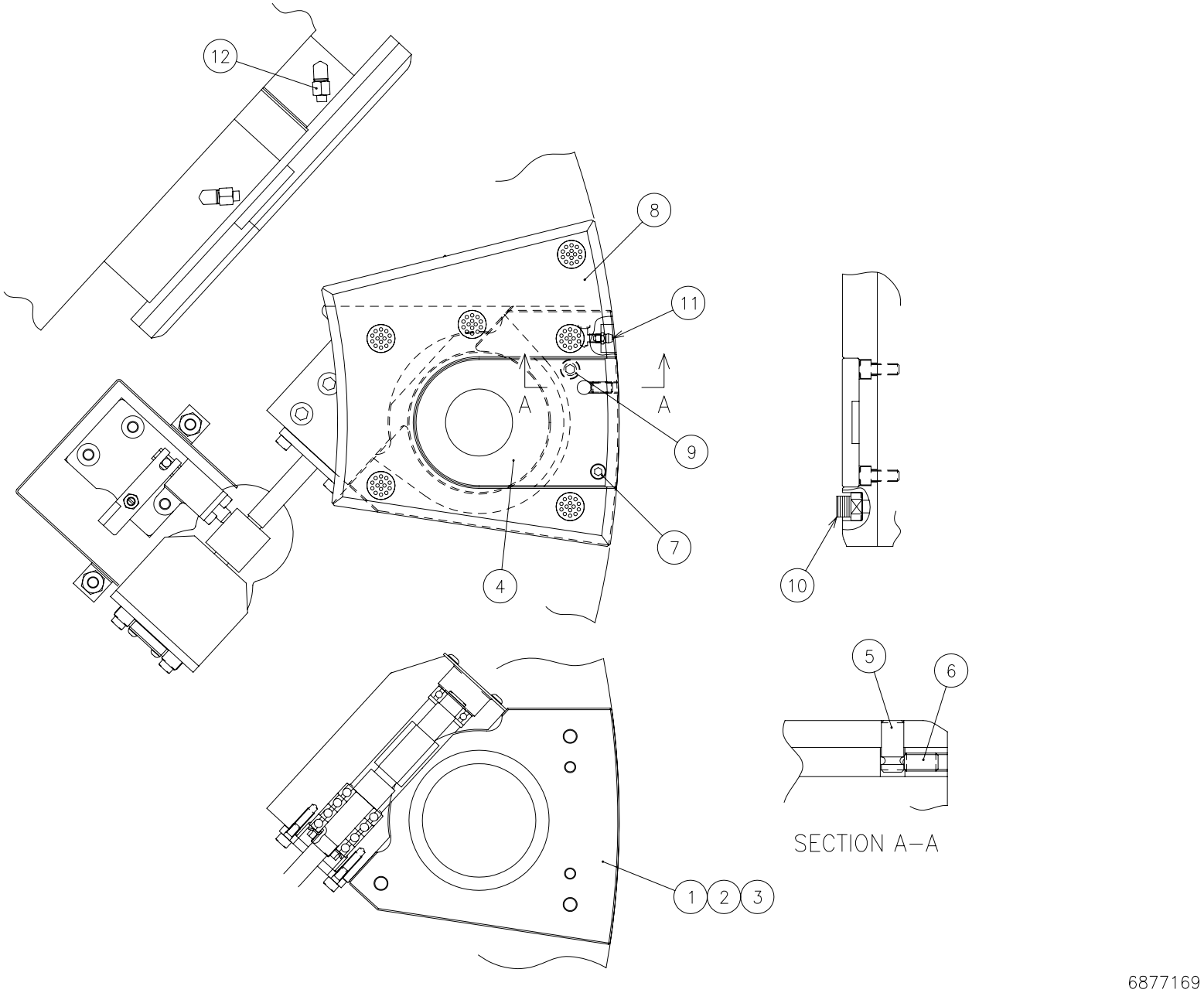
12
8
11
A
A
9
7
4
10
5
6
SECTION A–A
1
2
3
6877169

Unit No. 120

Turret B-P&F(9)

From Serial No.36102001 and after

Index	Code	Parts Name	Drawing No.	Type	Maker	Q'ty	Note
1	74571422	1-1/4" Die Spacer (A)	6915272			1	
2	74383549	Hex Soc Cap Screw	P330240016	M10X70		3	
3	74306022	Washer (M10)	0827013 B			3	
4	74572377	1-1/4" Die Spacer (B)	6915273 A			1	
5	74379658	Grooved Pin	6570463			1	
6	74563132	Ball Plunger	P338182011	BP-8-H	JEC	1	
7	79564305	Hex Soc Cap Screw	P330220006	M6X15		1	
8	74571424	1-1/4" Die Spacer (C)	6915274			1	
9	79564804	Hex Soc Cap Screw	P330230006	M8X20		2	
10	74569824	Brush C-3S	6812866 A			6	
11	31179170	Grease Nipple	P560600002	A-MT6X1		1	
12	74379661	Bite Type Pipe Fitting	P585564037	L4N4X2-PT1/8	NITTA MOORE	1	

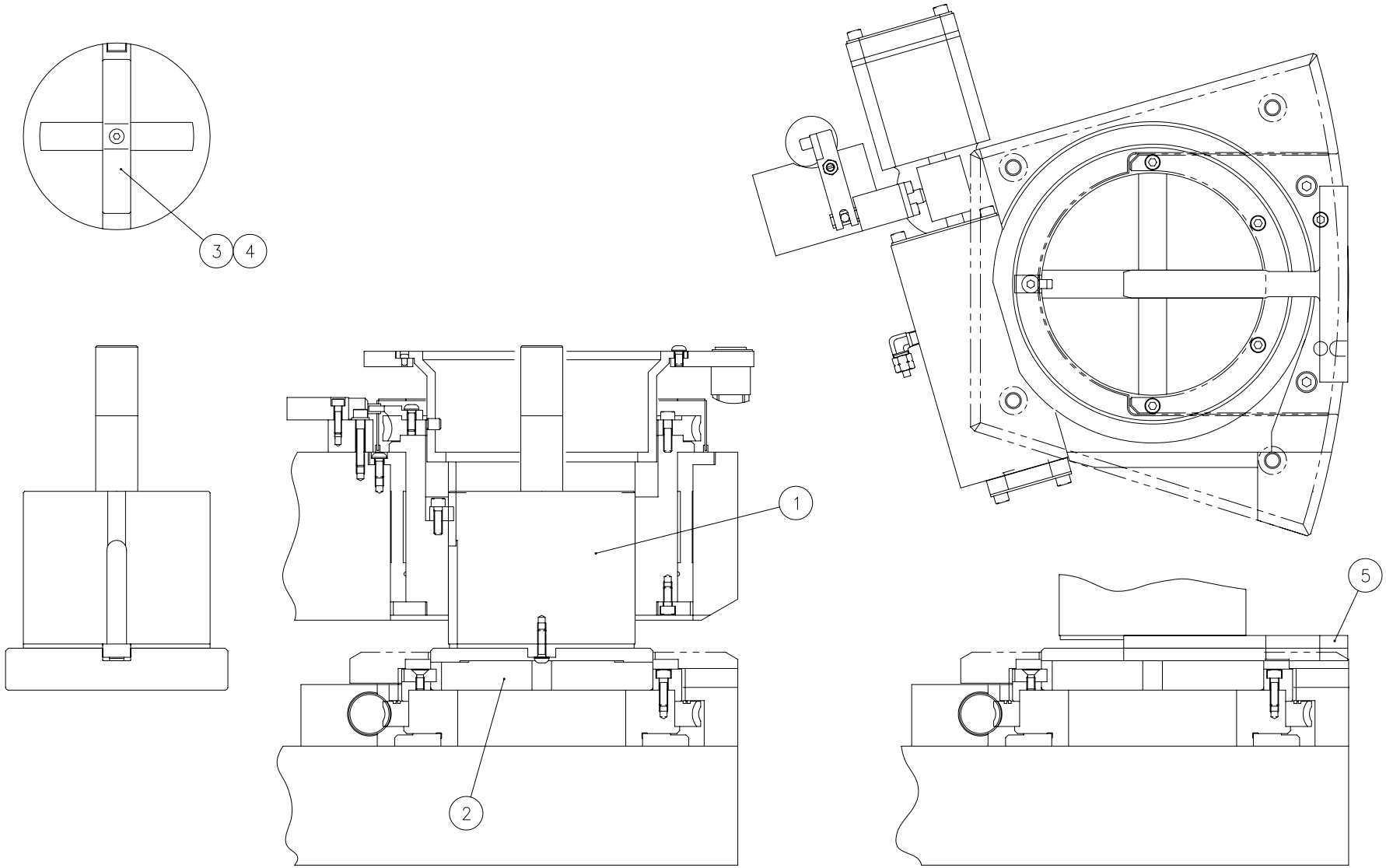

6532990B

Unit No. 121

Turret B-P&F(10) From Serial No.36102001 and after

Index	Code	Parts Name	Drawing No.	Type	Maker	Q'ty	Note
1	74569422	Punch Jig (4-1/2")	6598471			1	
2	74387048	Die Jig (4-1/2")	6532992 A			1	
3	74379790	Key (4-1/2")	6532993			1	
4	74314603	Button Head Screw	P334500016	M6X20		1	
5	74569423	T-type Jig (4-1/2")	6532994 A			2	
6	74375830	T-Type Jig	6010633			1	List Only
7	36389505	Knob	P317264014	PC25X8B	IMAO Mfg	2	List Only
8	36326826	Hex Soc Cap Screw	P330230022	M8X100		2	Accessory (List Only)
9		Lubricating Oil	P238038001	GRP-SPRAY-0.3L	IWATANI Industry	1	Accessory (List Only)

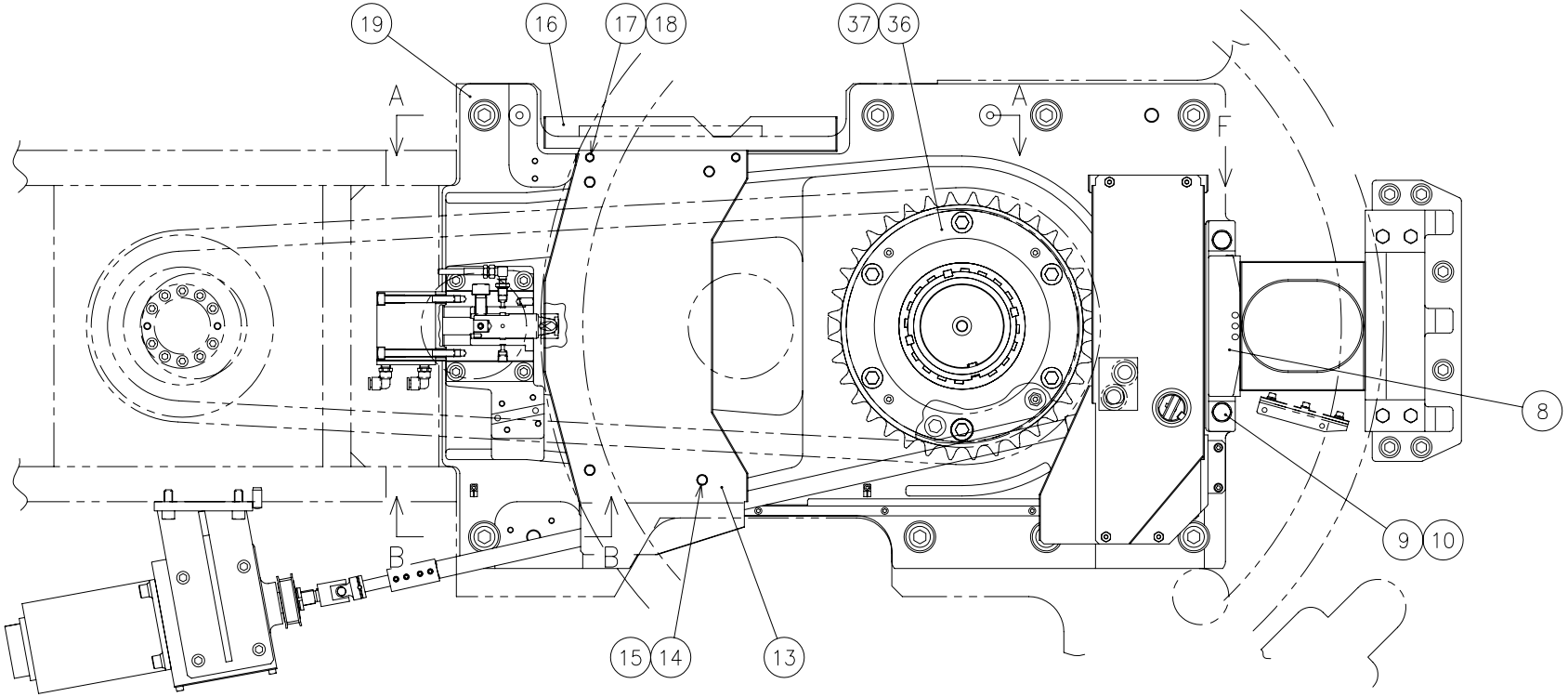

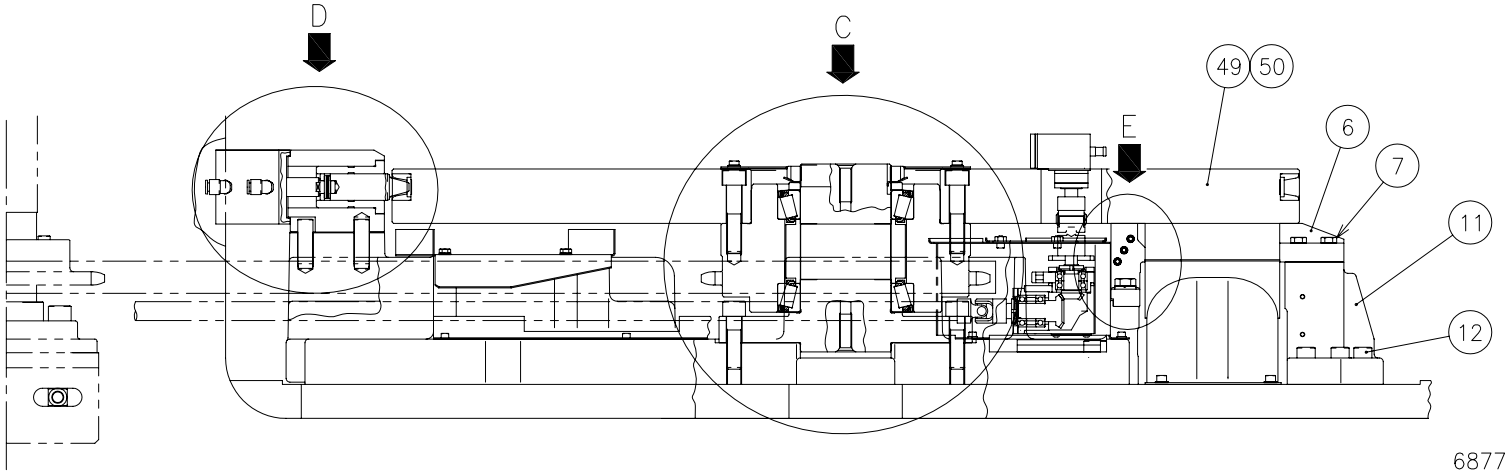

6877110#1
6877110#2

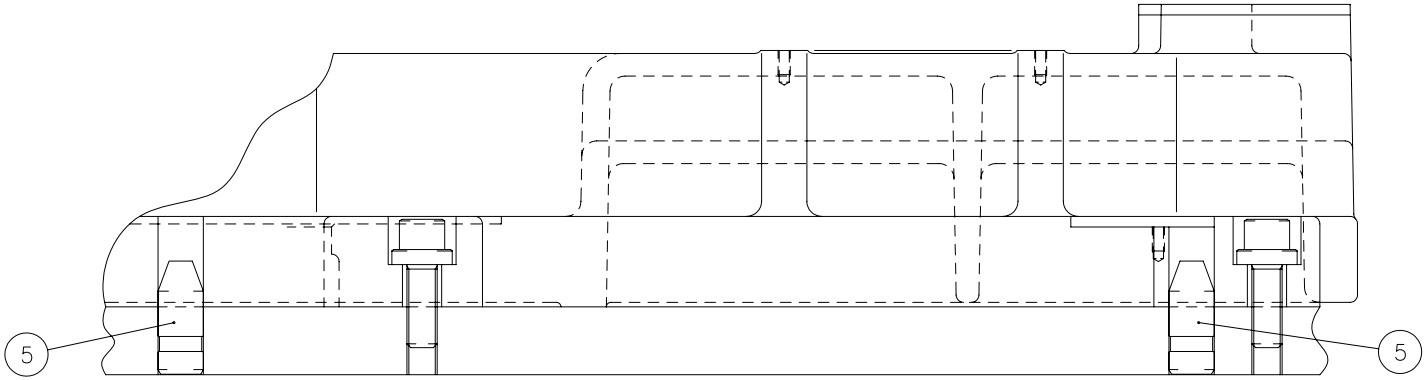

SECTION A–A

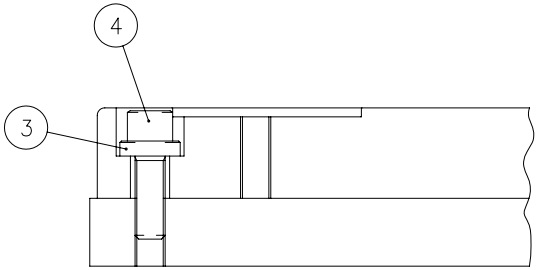

SECTION B–B

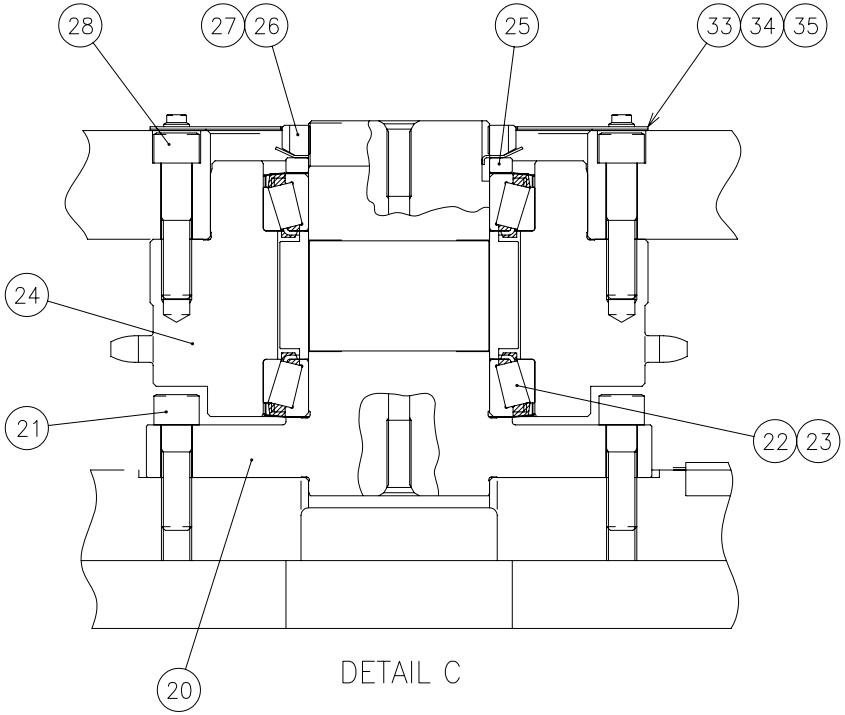

DETAIL C

6877110#1
6877110#2

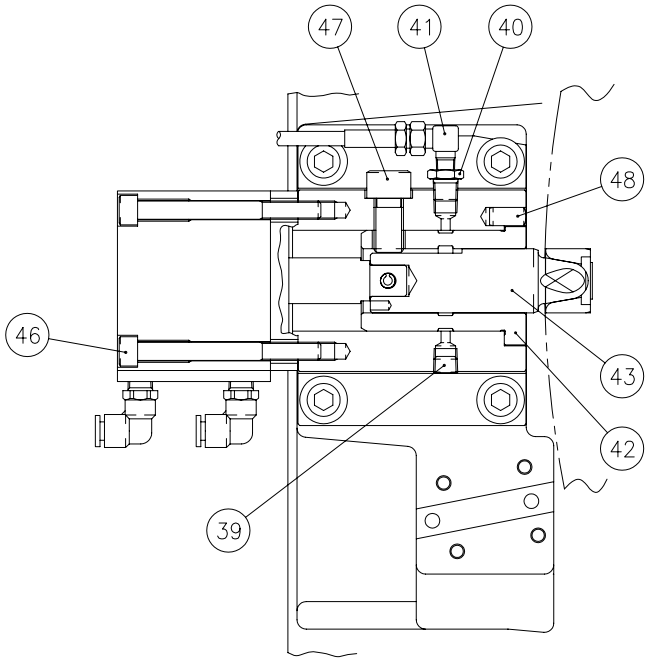

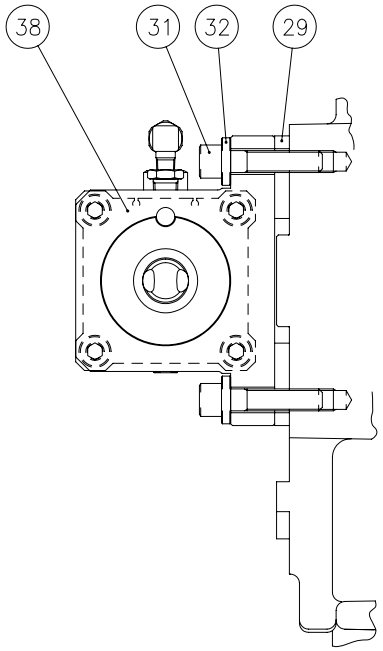

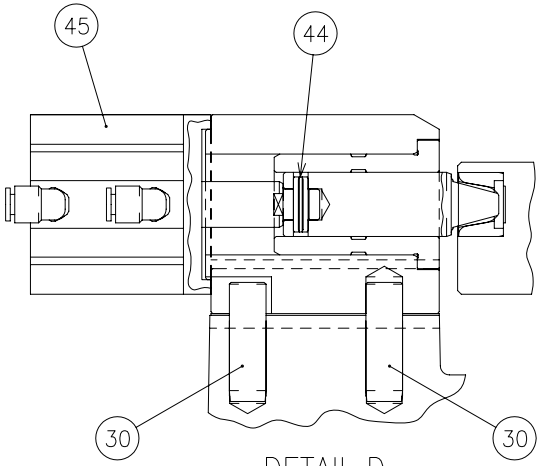

DETAIL D

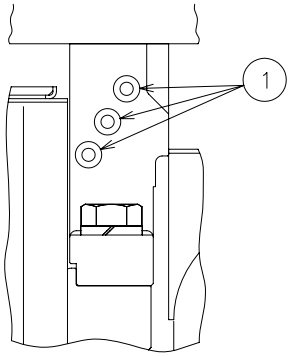

DETAIL E

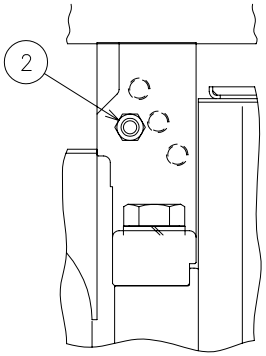

VIEW F

6877110#1
6877110#2

Turret B-P&F+PV(1) From Serial No.36102001 and after

Index	Code	Parts Name	Drawing No.	Type	Maker	Q'ty	Note
1	74351914	Instant Fitting	P586534002	EC6-PT1/8	NITTA MOORE	3	
2	74351914	Instant Fitting	P586534002	EC6-PT1/8	NITTA MOORE	1	
3	74301502	Washer	0821009 B			9	
4	71101346	Hex Soc Cap Screw	P330270008	M20X65		9	
5	74417827	Locating Pin	6874275			2	
6	74569665	Disk Support (Front)	6812584			1	
7	36147024	Bolt	P330050007	M12X50		4	
8	74418878	Disk Support (Rear)	6875489			1	
9	74303203	Bolt	P330060022	M16X55		2	
10	79566731	Spring Washer	P336050010	16		2	
11	74569666	Disk Support Block	6812585 B			1	
12	74535204	Hex Soc Cap Screw	P330260037	M16X65		6	
13	74569668	Scrap Receiver	6812588 A			1	
14	79567302	Bolt	P330030004	M8X15		4	
15	86610326	Spring Washer	P336050006	8		4	
16	74569669	Scrap Receiver Wing	6812589 A			1	
17	10442903	Bolt	P330020003	M6X12		2	
18	79564311	Spring Washer	P336050005	6		2	
19	74418896	Lower Base Assy	6875494			1	

Index	Code	Parts Name	Drawing No.	Type	Maker	Q'ty	Note
20	74419338	Bearing Shaft (Lower)	6812557			1	
21	71357839	Hex Soc Cap Screw	P330270009	M20X70		6	
22	74569663	Roller Bearing Set	7830623 A	HR32024XJL11DB	NSK	1	
23	74303127	Shield Plate	P406188005	32024XAV	FUKUDA	2	
24	74419339	Bearing Housing (Lower)	6812558			1	
25	74379119	Collar	6530298			1	
26	74563668	Crown Nut	0811674 A			1	
27	74303123	Lock Washer	P406040019	AW-24		1	
28	74722722	Hex Soc Cap Screw	P330270011	M20X80		6	
29	74577424	Spacer	6812556			2	
30	74389710	Parallel Pin	P337055079	DPS-A20-65	OKITA	2	
31	74304914	Hex Soc Cap Screw	P330250010	M12X55		4	
32	74303703	Washer (M12)	0827014 B			4	
33	74569675	Bearing Cover	6812595			1	
34	74569676	Cover Seal	6812596			1	
35	74382078	Flange Socket Bolt	P330468006	M8X15	NISSAN NEJI	4	
36	74386826	Driven Sprocket	6593831			1	
37	36322123	Hex Soc Cap Screw	P330270004	M20X45		6	
38	74569659	Index Pin Housing	6812587 A			1	

Index	Code	Parts Name	Drawing No.	Type	Maker	Q'ty	Note
39	74389708	Plug For Piping	P580208034	P10410	GOSHO Works	1	
40	74722884	Bush For Piping	P580013001	M-1/4X1/8	BAN SS	1	
41	74722994	Hose Adapter	P589223029	8021RG02	BRIDGESTON	1	
42	74379122	Index Pin Bushing	6530302			1	
43	74379123	Index Pin	6530303 B			1	
44	74722785	Spring Pin	P337030080	8X30		1	
45	74417845	Air Cylinder (Compact Type)	7831566	CDQ2B80-30-DCH5905H	SMC	1	
46	74381569	Hex Soc Cap Screw	P330240022	M10X100		4	
47	74389709	Bolt	6572869 A			1	
48	75428631	Parallel Pin	P337020056	A-10X20		1	
49	74419340	70ST Lower Turret Disk	6877113			1	2AI
49	74419341	58ST Lower Turret Disk	6877142			1	4AI
50	74302104	Bushing	0480336 K			34	2AI
50	74302104	Bushing	0480336 K			30	4AI

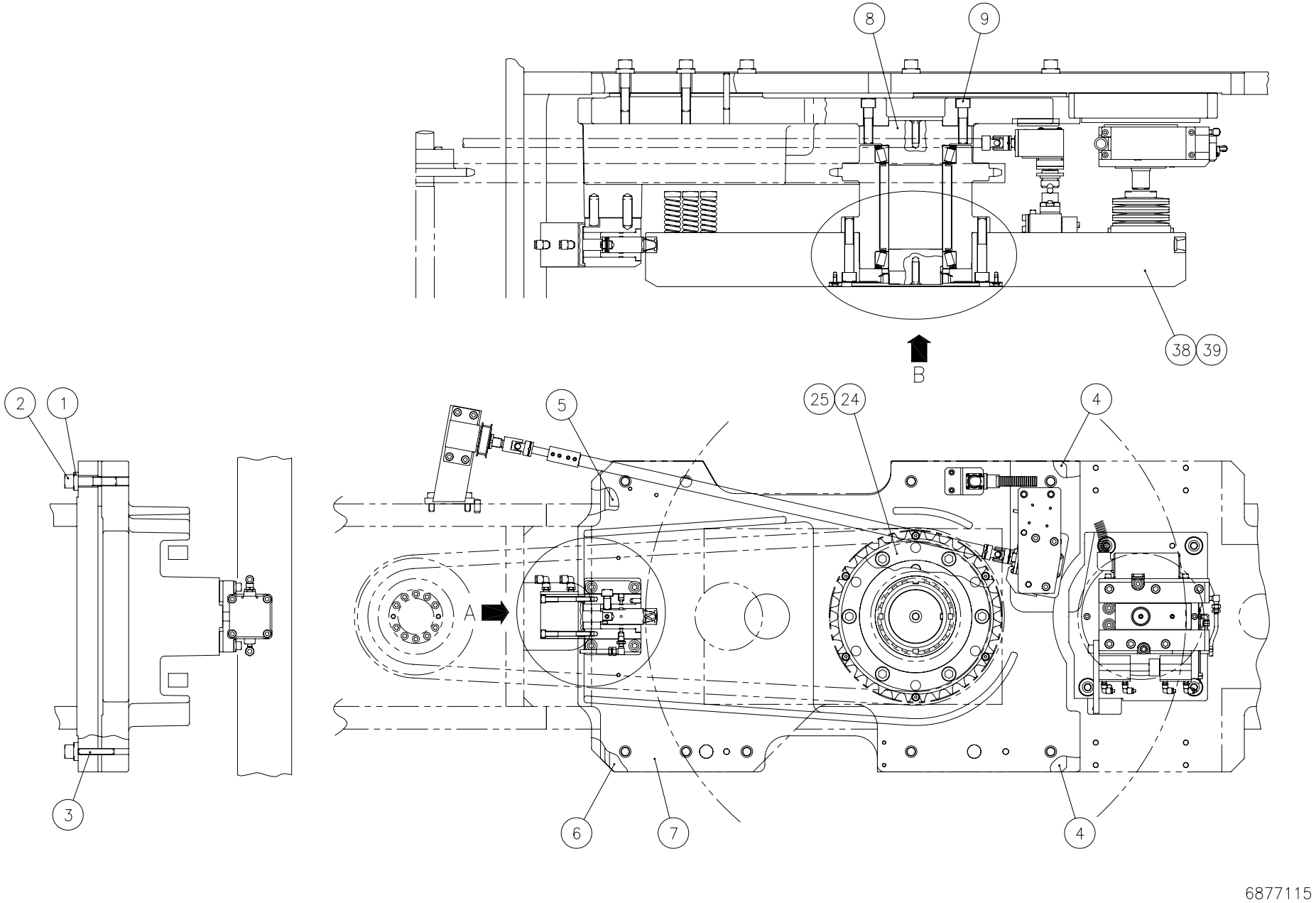
8
9
38
39
B
2
1
5
25
24
4
A
3
6
7
4
6877115

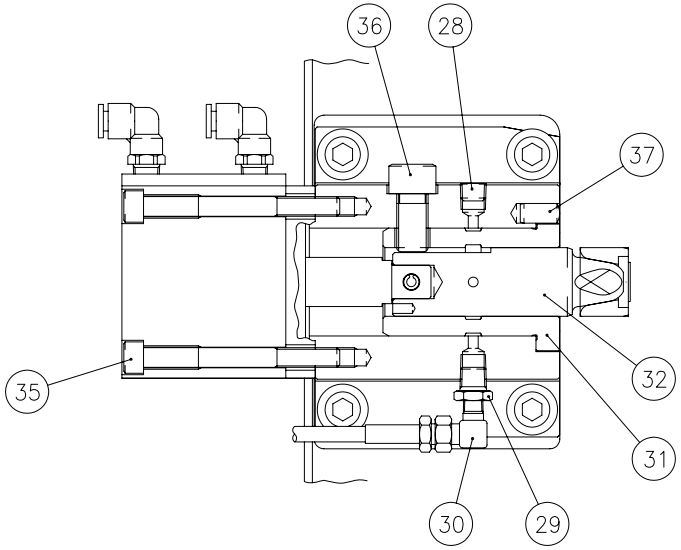

DETAIL A

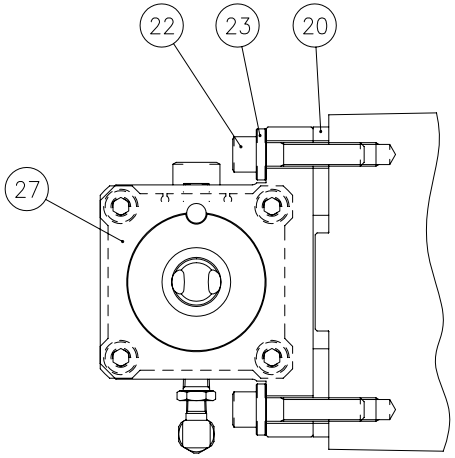

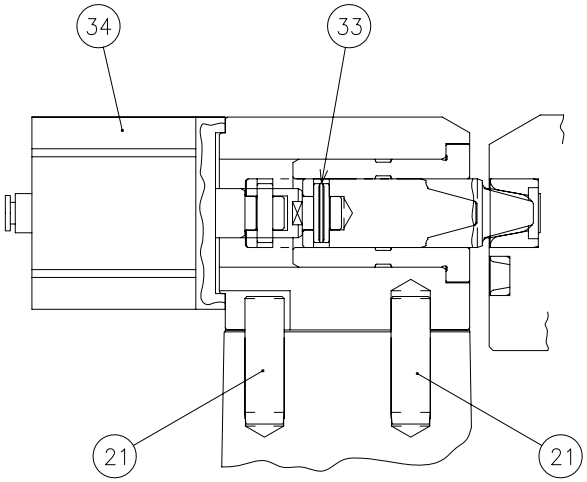

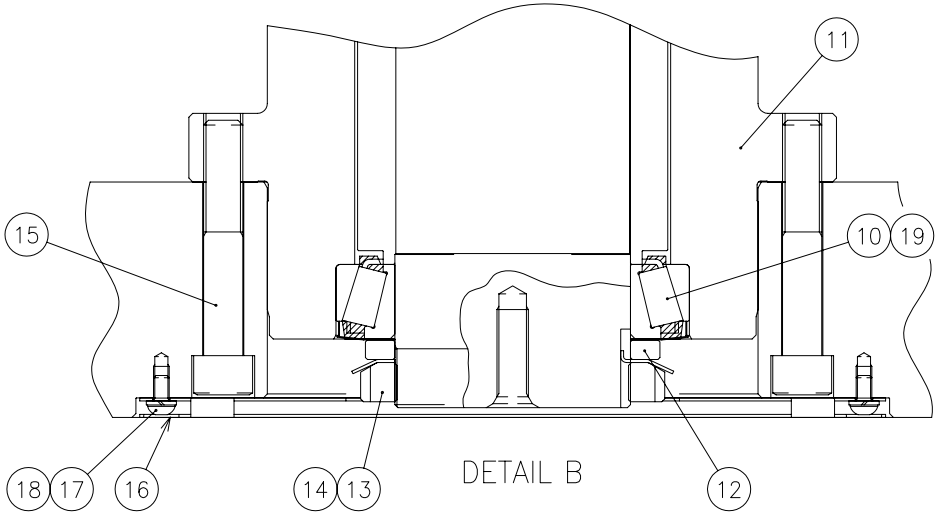

DETAIL B

6877115

Index	Code	Parts Name	Drawing No.	Type	Maker	Q'ty	Note
1	74301502	Washer	0821009 B			9	
2	36618103	Hex Soc Cap Screw	P330270013	M20X90		9	
3	74415408	Parallel Pin	P337054103	MSTM13-80	MISUMI	2	
4	74569654	Spacer (A)	6812554			2	
5	74569655	Spacer (B)	6812555			1	
6	74419342	Spacer (C)	6877116			1	
7	74419343	Upper Base Assy	6877119			1	
8	74569656	Bearing Shaft (Upper)	6812552 A			1	
9	74722722	Hex Soc Cap Screw	P330270011	M20X80		8	
10	74569657	Roller Bearing Set	7830622 A	HR32024XJL11DB	NSK	1	
11	74379117	Bearing Housing (Upper)	6530296			1	
12	74379119	Collar	6530298			1	
13	74563668	Crown Nut	0811674 A			1	
14	74303123	Lock Washer	P406040019	AW-24		1	
15	31172405	Hex Soc Cap Screw	P330270017	M20X120		6	
16	74379120	Cap	6530299 A			1	
17	10569021	Button Head Screw	P334500019	M8X15		6	
18	86610326	Spring Washer	P336050006	8		6	
19	74303127	Shield Plate	P406188005	32024XAV	FUKUDA	2	

Index	Code	Parts Name	Drawing No.	Type	Maker	Q'ty	Note
20	74577424	Spacer	6812556			2	
21	74389710	Parallel Pin	P337055079	DPS-A20-65	OKITA	2	
22	74304914	Hex Soc Cap Screw	P330250010	M12X55		4	
23	74303703	Washer (M12)	0827014 B			4	
24	74386826	Driven Sprocket	6593831			1	
25	36322123	Hex Soc Cap Screw	P330270004	M20X45		6	
26	74702340	Plug For Piping	P580208001	GM-1/8	GOSHO Works	1	List Only
27	74569659	Index Pin Housing	6812587 A			1	
28	74389708	Plug For Piping	P580208034	P10410	GOSHO Works	1	
29	74722884	Bush For Piping	P580013001	M-1/4X1/8	BAN SS	1	
30	74722994	Hose Adapter	P589223029	8021RG02	BRIDGESTON	1	
31	74379122	Index Pin Bushing	6530302			1	
32	74379123	Index Pin	6530303 B			1	
33	74722785	Spring Pin	P337030080	8X30		1	
34	74417845	Air Cylinder (Compact Type)	7831566	CDQ2B80-30-DCH5905H	SMC	1	
35	74381569	Hex Soc Cap Screw	P330240022	M10X100		4	
36	74389709	Bolt	6572869 A			1	
37	75428631	Parallel Pin	P337020056	A-10X20		1	
38	74575626	70ST Upper Turret Disk	6811080			1	2AI

Index	Code	Parts Name	Drawing No.	Type	Maker	Q'ty	Note
38	74571410	58ST Upper Turret Disk	6811082 A			1	4AI
39	74302104	Bushing	0480336 K			34	2AI
39	74302104	Bushing	0480336 K			30	4AI

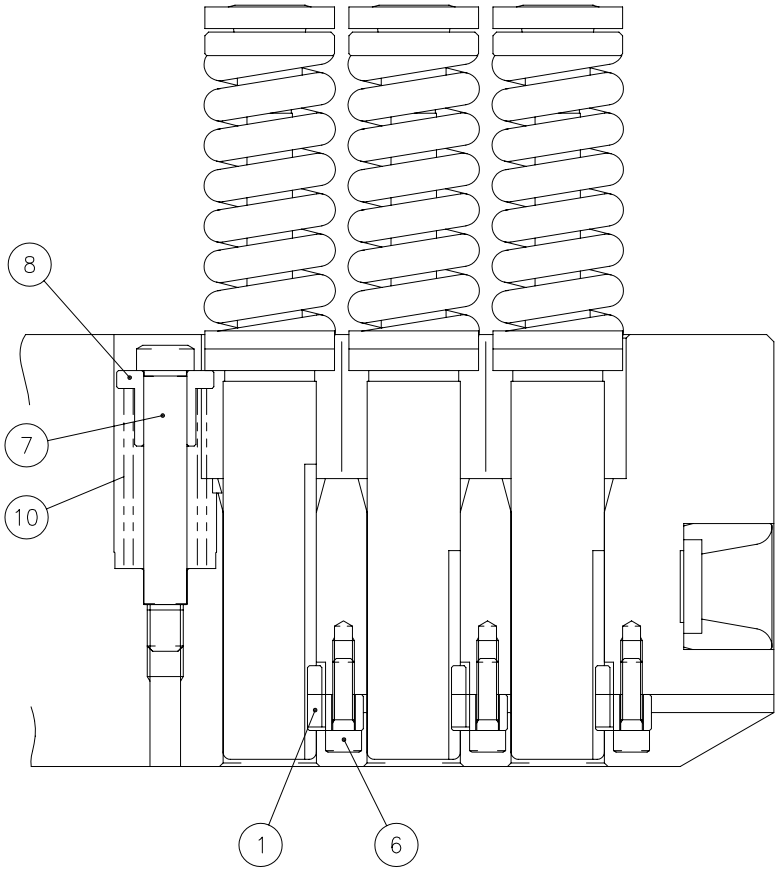

<1/2">

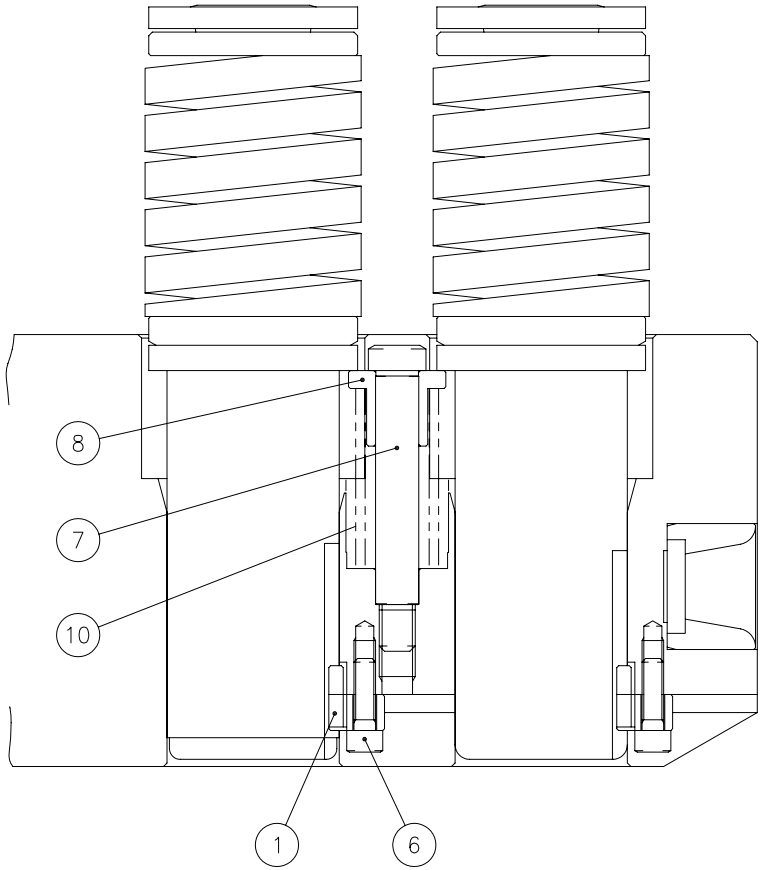

<1−1/4">

6812836
6812837

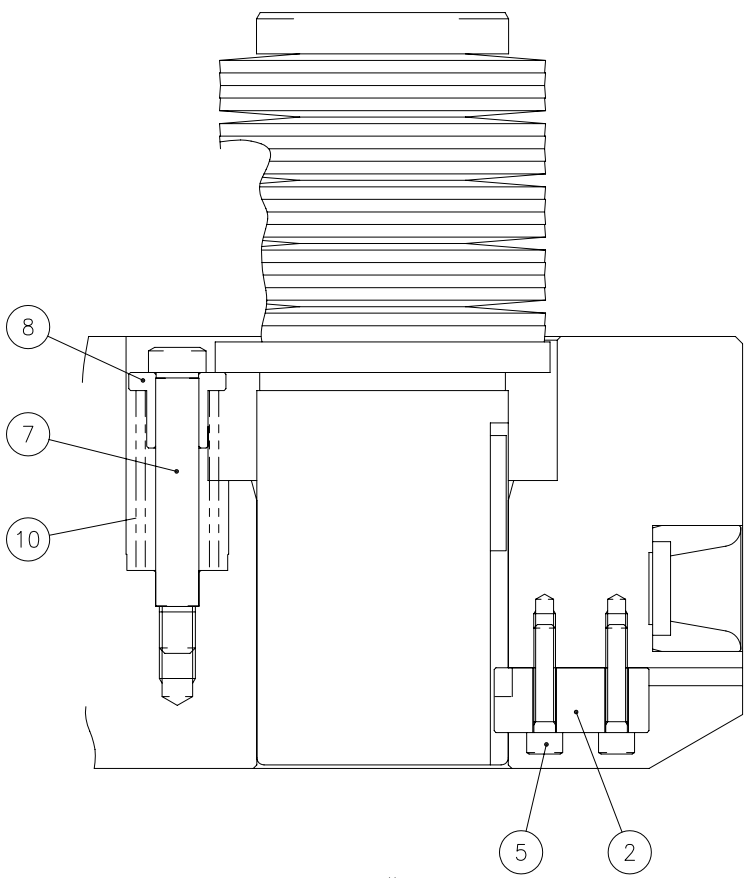

<2">

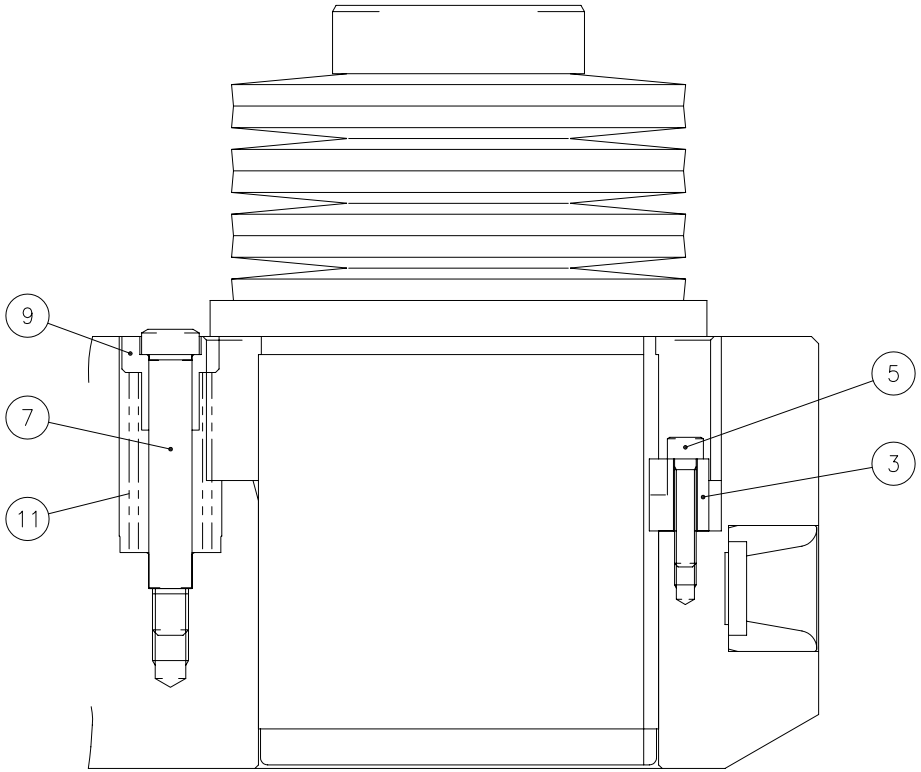

<3-1/2">

6812834
6812835

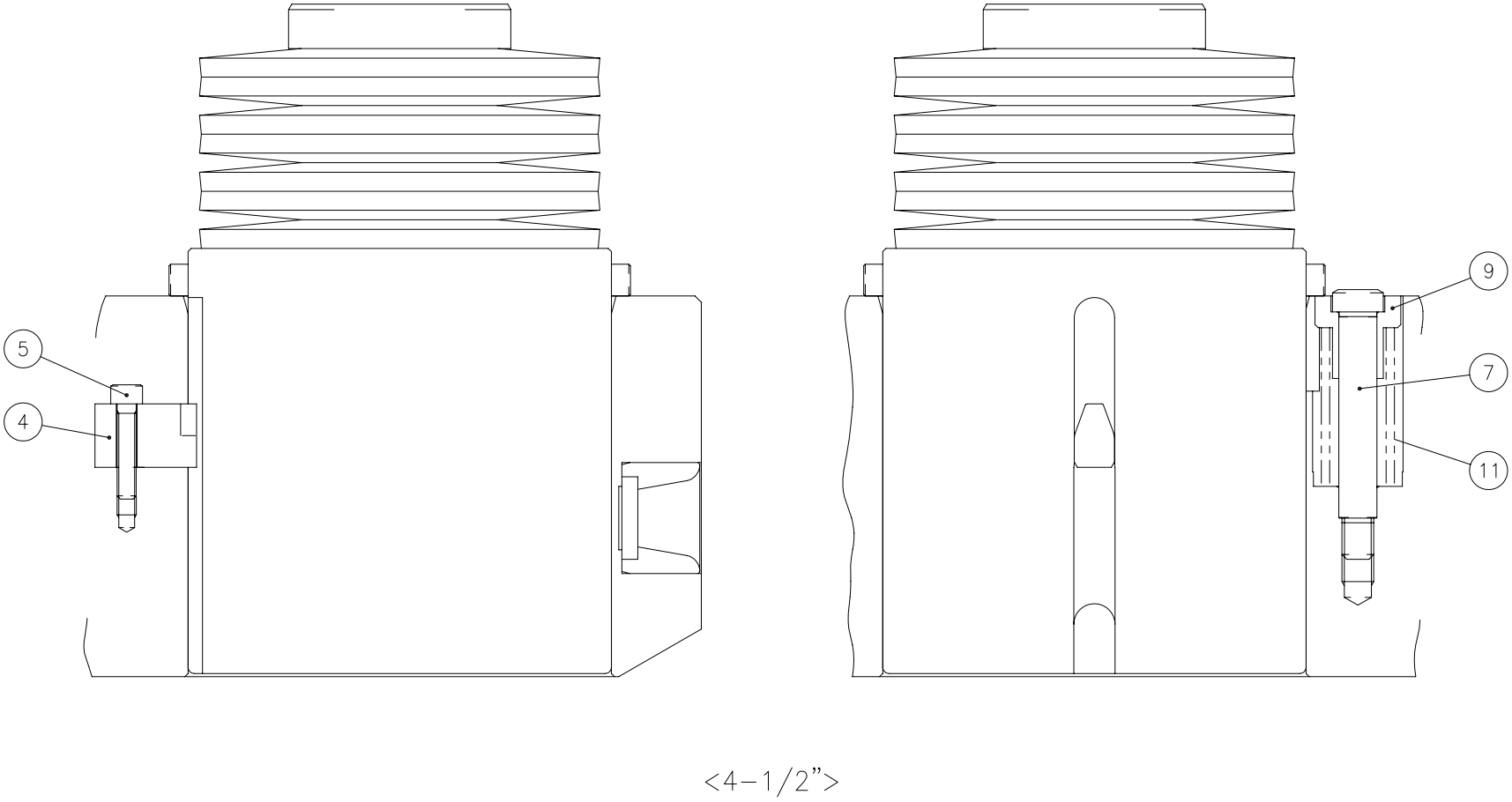

6812833

Index	Code	Parts Name	Drawing No.	Type	Maker	Q'ty	Note
1	74569848	1/2" Guide Key	3008133			48	2AI
1	74569848	1/2" Guide Key	3008133			40	4AI
2	74569850	2" Guide Key	6812864			4	
3	74569852	3-1/2" Guide Key	6812865			2	
4	74561406	4-1/2" Guide Key	7400914 B			2	2AI
5	86213043	Hex Soc Cap Screw	P330220012	M6X30		12	2AI
5	86213043	Hex Soc Cap Screw	P330220012	M6X30		10	4AI
6	79567722	Hex Soc Cap Screw	P330220009	M6X20		48	2AI
6	79567722	Hex Soc Cap Screw	P330220009	M6X20		40	4AI
7	74569846	Shoulder Screw	3204978			118	2AI
7	74569846	Shoulder Screw	3204978			96	4AI
8	74306004	Lifter Collar	5500217 B			102	2AI
8	74306004	Lifter Collar	5500217 B			88	4AI
9	74306014	Lifter Ring	5501009 C			16	2AI
9	74306014	Lifter Ring	5501009 C			8	4AI
10	74569847	Spring (1/2",1-1/4",2")	3200854			90	2AI
10	74569847	Spring (1/2",1-1/4",2")	3200854			79	4AI
11	74569851	Spring (3-1/2",4-1/2")	3204979 A			28	2AI
11	74569851	Spring (3-1/2",4-1/2")	3204979 A			17	4AI

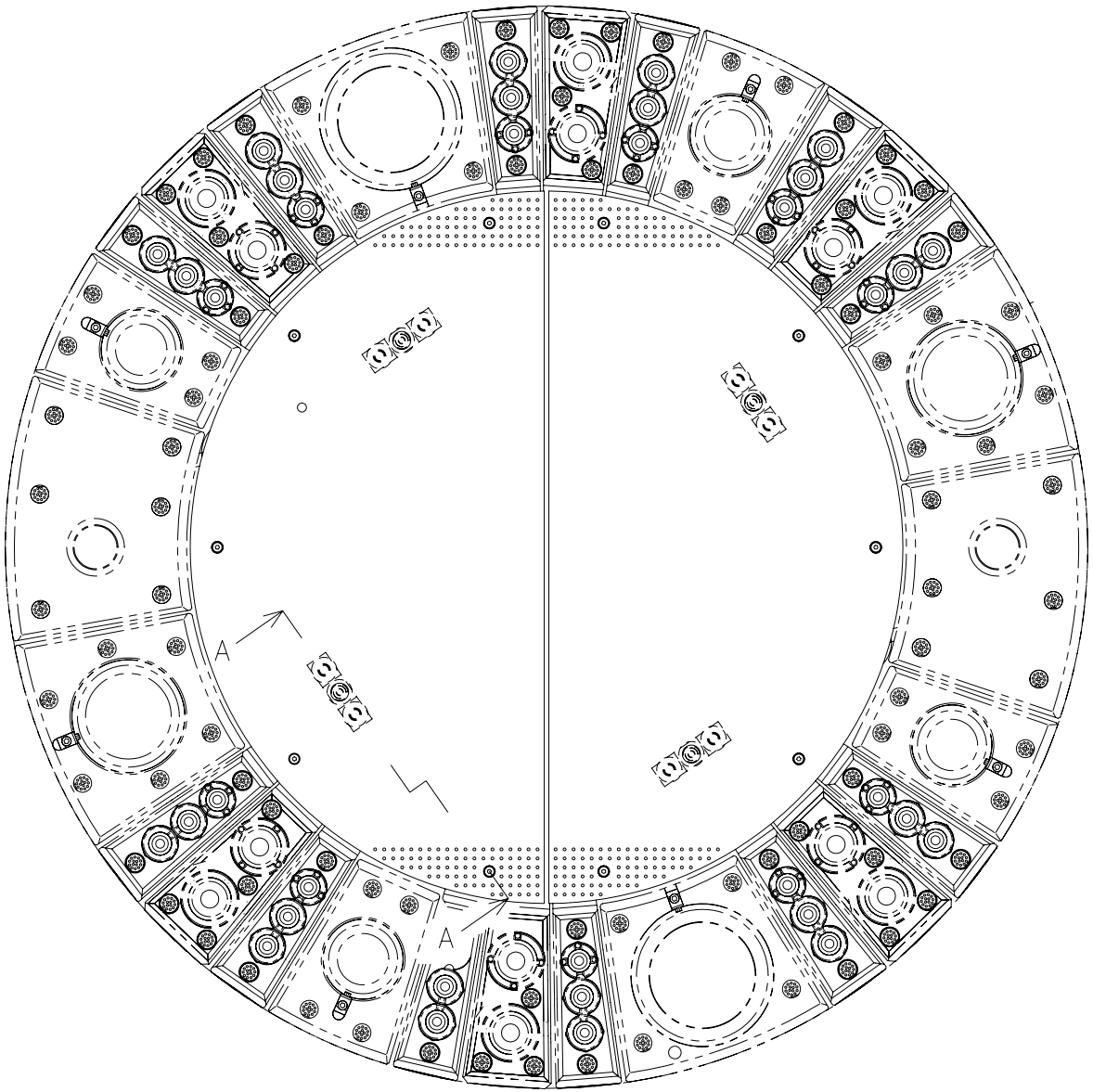

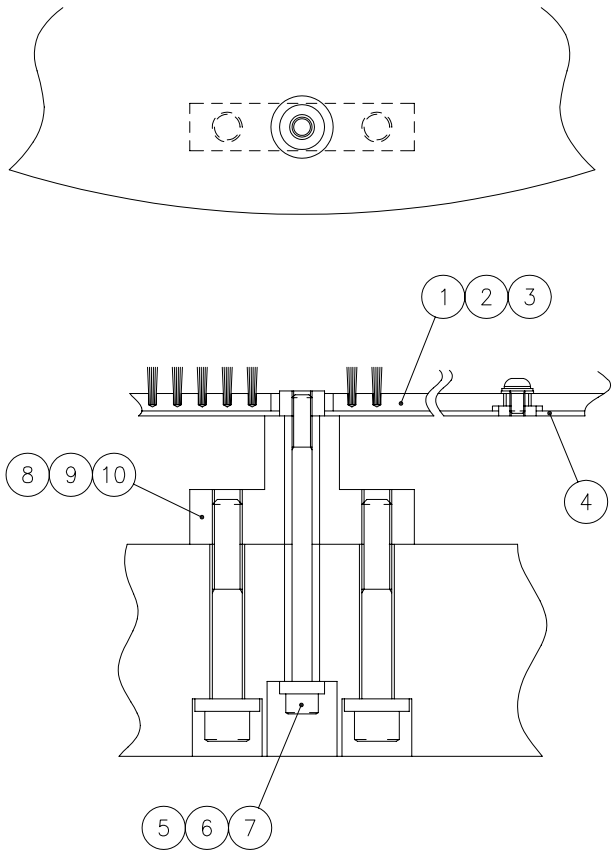

SECTION A–A

6875490

Unit No. 125

Turret B-P&F+PV(4) From Serial No.36102001 and after

Index	Code	Parts Name	Drawing No.	Type	Maker	Q'ty	Note
1	74418882	MDF Brush (Support Plate)	6875491			2	2AI
1	74419344	MDF Brush (Support Plate)	6877148			2	4AI
2	36379029	Button Head Screw	P334500013	M6X10		10	
3	79565419	Washer	P336000005	6(Regular Round)		10	
4	74418883	Brush Setting Plate	6875492			1	2AI
4	74419345	Brush Setting Plate	6877149			1	4AI
5	74707962	Hex Soc Cap Screw	P330230026	M8X120		4	2AI
5	79316161	Hex Soc Cap Screw	P330230024	M8X110		4	4AI
6	74314204	Washer (M8)	0827367			4	
7	86610326	Spring Washer	P336050006	8		4	4AI
8	74379721	Support Block	6530319 C			4	
9	52332453	Hex Soc Cap Screw	P330250016	M12X85		8	2AI
9	10558427	Hex Soc Cap Screw	P330250014	M12X75		8	4AI
10	74303703	Washer (M12)	0827014 B			8	

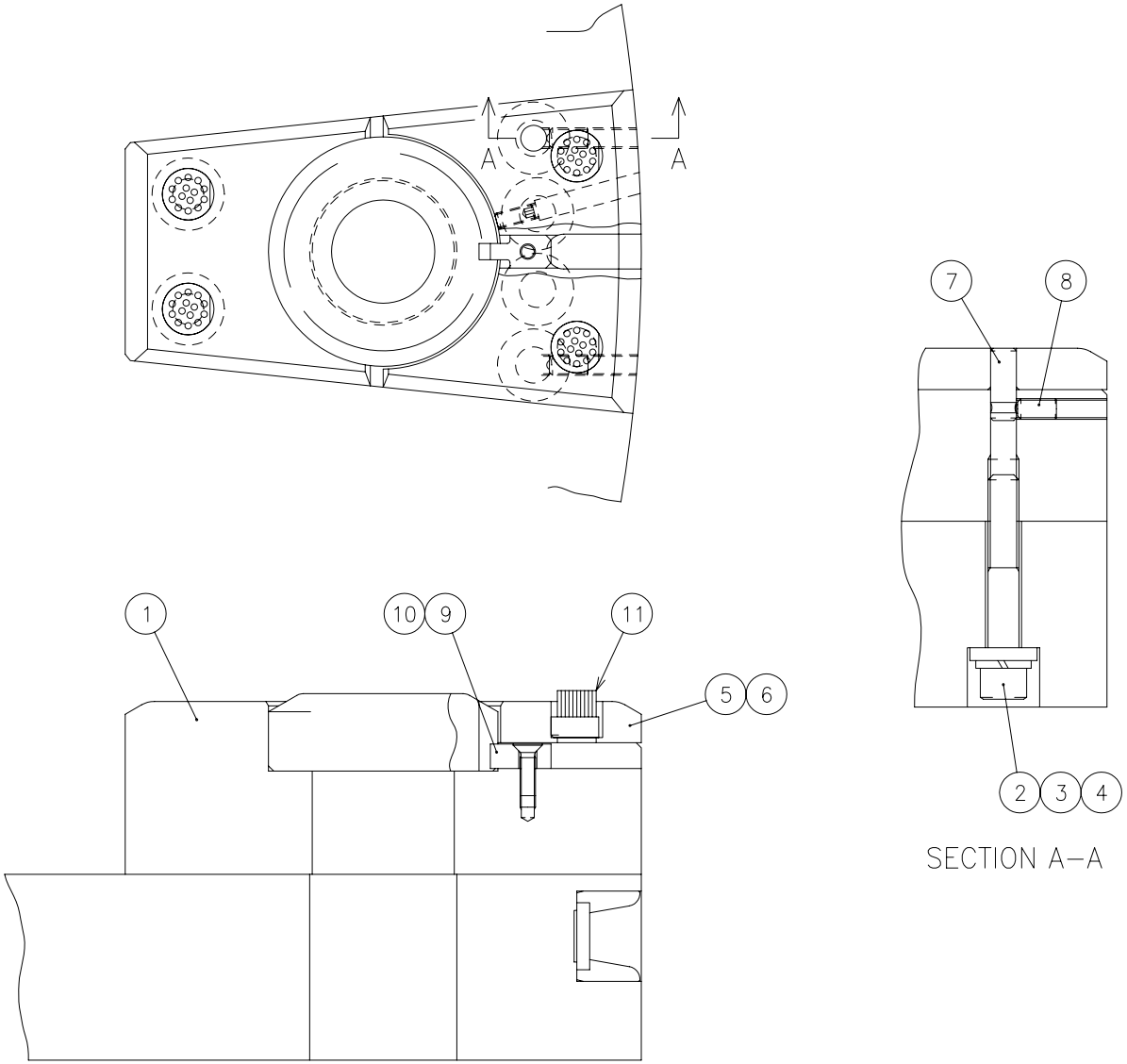

6877129

Unit No. 126

Turret B-P&F+PV(5) From Serial No.36102001 and after

Index	Code	Parts Name	Drawing No.	Type	Maker	Q'ty	Note
1	74379730	2" Die Holder	6570265			1	
2	10558427	Hex Soc Cap Screw	P330250014	M12X75		6	
3	74303703	Washer (M12)	0827014 B			6	
4	86610819	Spring Washer	P336050008	12		6	
5	74379731	2" Die Spacer	6570266			1	
6	21218020	Socket Set Screw	P330590054	M6X15(Dimple Type)		1	
7	75426232	Parallel Pin	P337048020	LC-BX10X28	NITTO SEIKO	2	
8	74563132	Ball Plunger	P338182011	BP-8-H	JEC	2	
9	74306001	Die Key	0488034 C			1	
10	74183324	Flat Head Screw	P334110030	M6X20		1	
11	74569824	Brush C-3S	6812866 A			4	

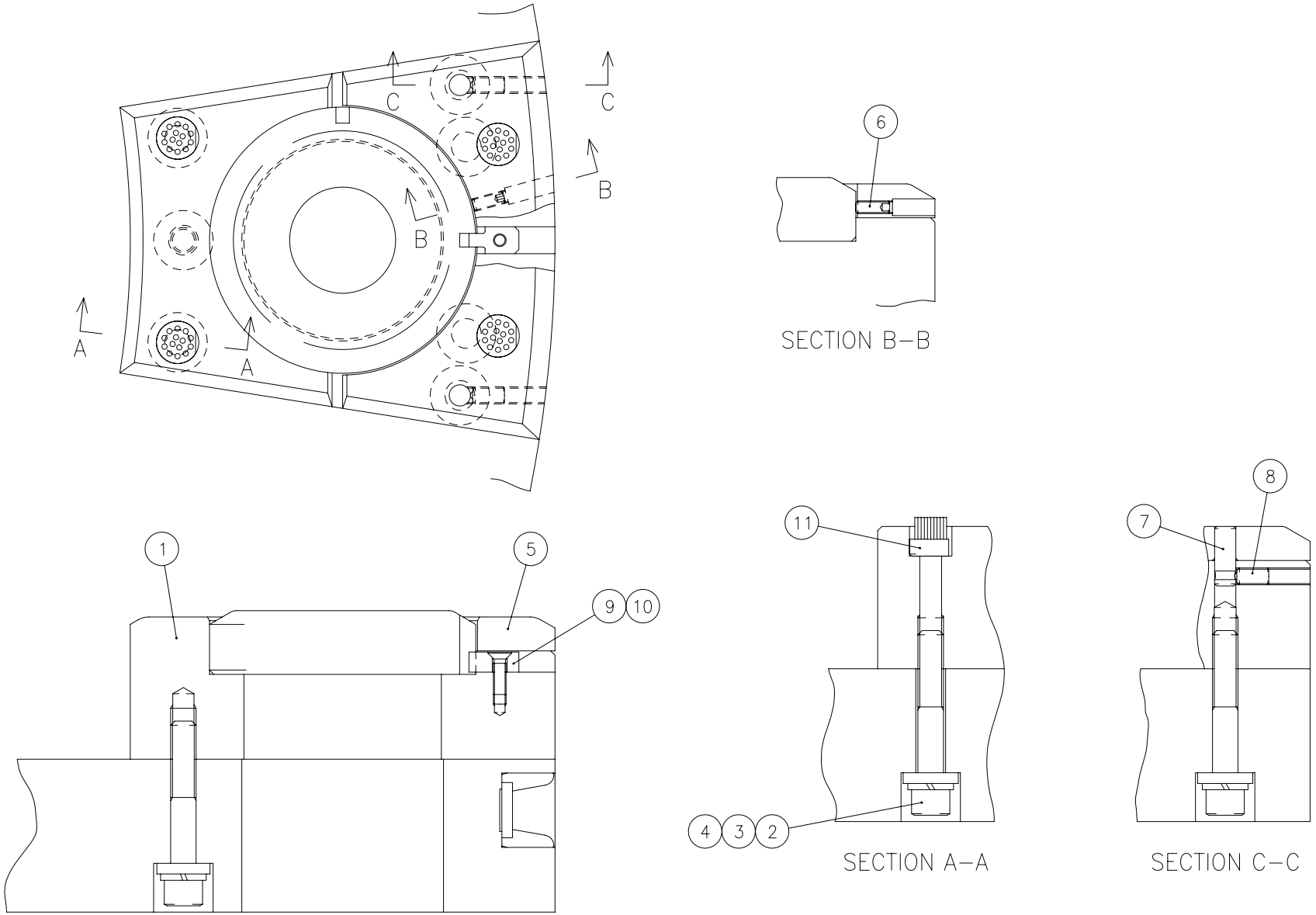
C
C
B
B
A
A
6
SECTION B–B
1
5
9
10
11
8
7
4
3
2
SECTION A–A
SECTION C–C
6877130

Unit No. 127

Turret B-P&F+PV(6) From Serial No.36102001 and after

Index	Code	Parts Name	Drawing No.	Type	Maker	Q'ty	Note
1	74379732	3-1/2" Die Holder	6570268			1	
2	10558427	Hex Soc Cap Screw	P330250014	M12X75		6	
3	74303703	Washer (M12)	0827014 B			6	
4	86610819	Spring Washer	P336050008	12		6	
5	74379733	3-1/2" Die Spacer	6570269			1	
6	21218020	Socket Set Screw	P330590054	M6X15(Dimple Type)		1	
7	75426232	Parallel Pin	P337048020	LC-BX10X28	NITTO SEIKO	2	
8	74563132	Ball Plunger	P338182011	BP-8-H	JEC	2	
9	74306001	Die Key	0488034 C			1	
10	74183324	Flat Head Screw	P334110030	M6X20		1	
11	74569824	Brush C-3S	6812866 A			4	

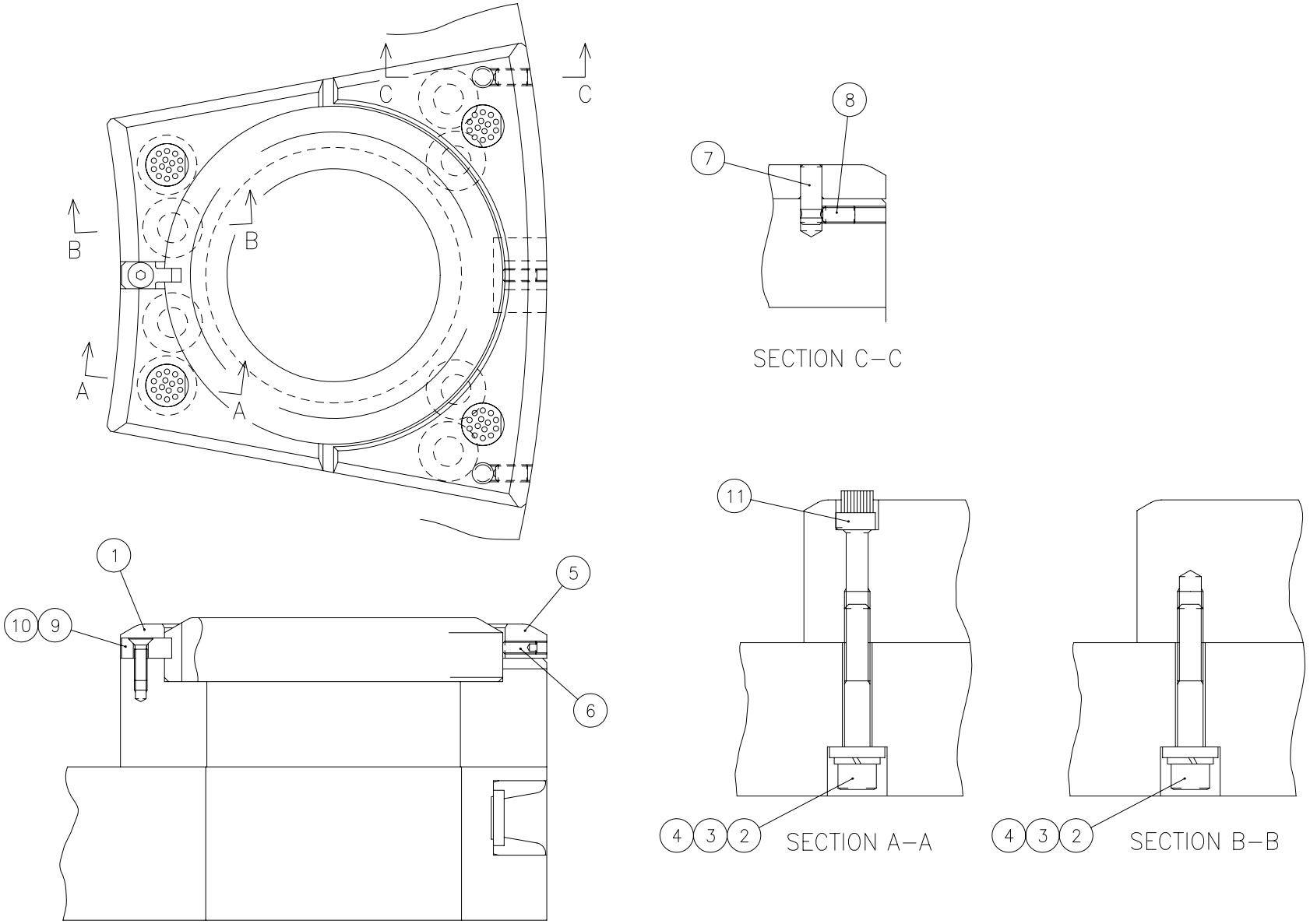

6877131

Unit No. 128

Turret B-P&F+PV(7) From Serial No.36102001 and after

Index	Code	Parts Name	Drawing No.	Type	Maker	Q'ty	Note
1	74382402	4-1/2" Die Holder	6570474 A			1	
2	10558427	Hex Soc Cap Screw	P330250014	M12X75		6	
3	74303703	Washer (M12)	0827014 B			6	
4	86610819	Spring Washer	P336050008	12		6	
5	74379738	4-1/2" Die Spacer	6570476			1	
6	21218020	Socket Set Screw	P330590054	M6X15(Dimple Type)		1	
7	75426232	Parallel Pin	P337048020	LC-BX10X28	NITTO SEIKO	2	
8	74563132	Ball Plunger	P338182011	BP-8-H	JEC	2	
9	74306001	Die Key	0488034 C			1	
10	74183324	Flat Head Screw	P334110030	M6X20		1	
11	74569824	Brush C-3S	6812866 A			4	

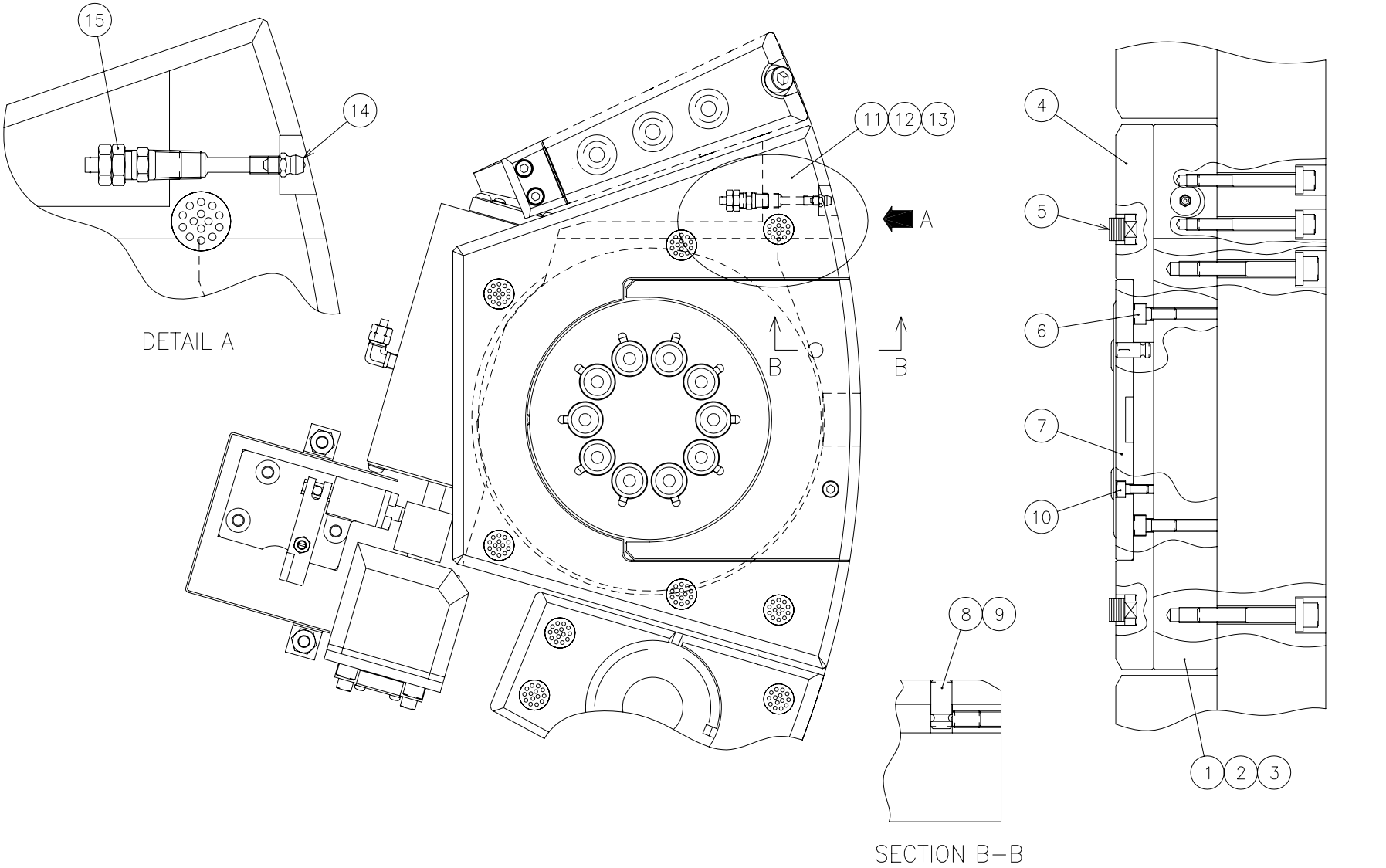
15
14
DETAIL A
11
12
13
A
B
B
4
5
6
7
10
8
9
1
2
3
SECTION B–B
6877185

Unit No. 129

Turret B-P&F+PV(8) From Serial No.36102001 and after

Index	Code	Parts Name	Drawing No.	Type	Maker	Q'ty	Note
1	74571437	4-1/2" Die Spacer (A)	6915287			1	
2	78180217	Hex Soc Cap Screw	P330240019	M10X85		3	
3	74306022	Washer (M10)	0827013 B			3	
4	74571438	4-1/2" Die Spacer (B)	6915288			1	
5	74569824	Brush C-3S	6812866 A			6	
6	79564804	Hex Soc Cap Screw	P330230006	M8X20		2	
7	74571439	4-1/2" Die Spacer (C)	6915289			1	
8	74379658	Grooved Pin	6570463			1	
9	74563132	Ball Plunger	P338182011	BP-8-H	JEC	1	
10	79564305	Hex Soc Cap Screw	P330220006	M6X15		1	
11	74571440	4-1/2" Die Spacer (D)	6915290			1	
12	10329641	Hex Soc Cap Screw	P330230019	M8X85		2	
13	74314204	Washer (M8)	0827367			2	
14	31179170	Grease Nipple	P560600002	A-MT6X1		1	
15	74379761	Bite Type Pipe Fitting	P585534027	C4N4X2-PT1/8	NITTA MOORE	1	

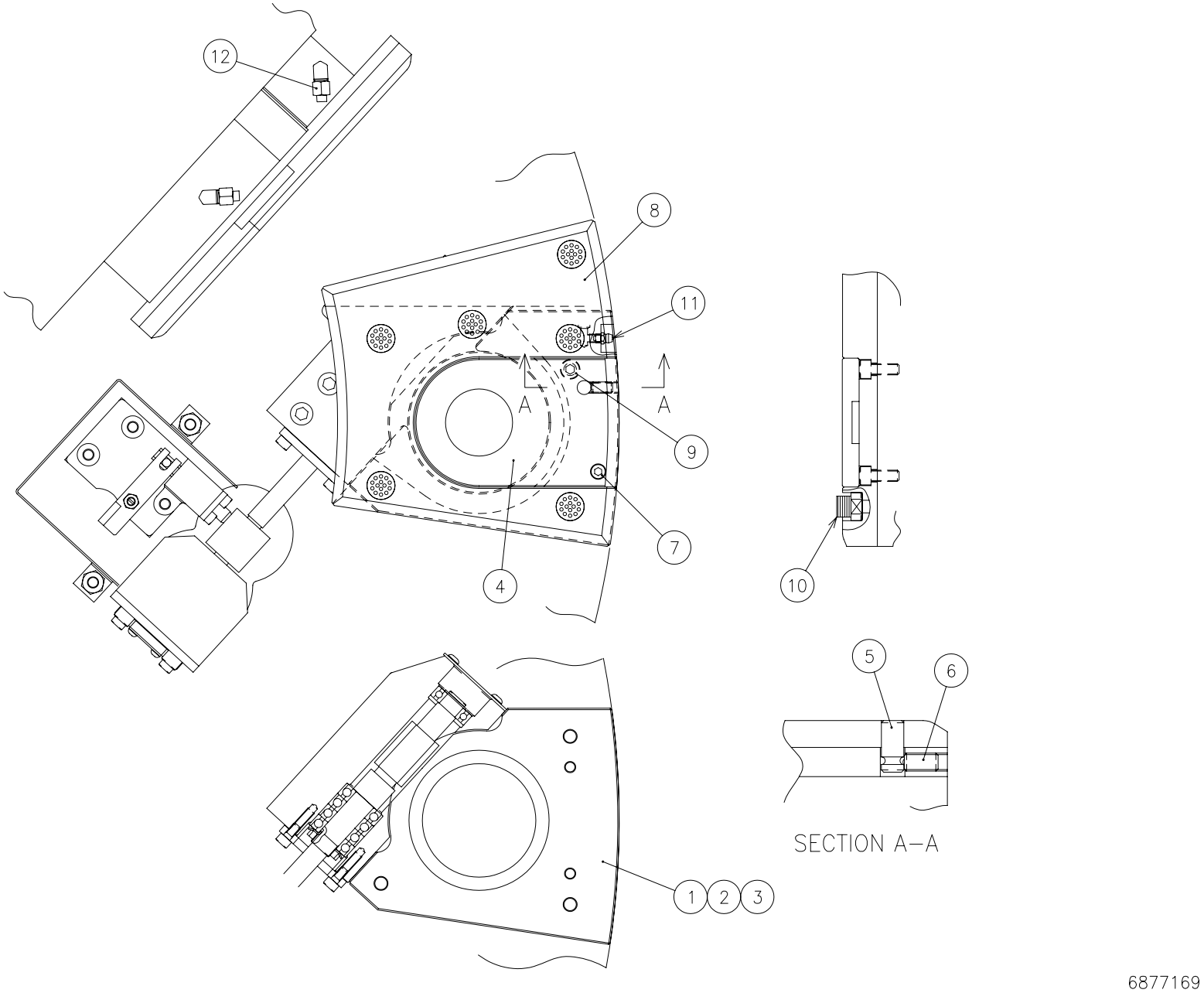
12
8
11
A
A
9
7
4
10
5
6
SECTION A–A
1
2
3
6877169

Unit No. 130

Turret B-P&F+PV(9) From Serial No.36102001 and after

Index	Code	Parts Name	Drawing No.	Type	Maker	Q'ty	Note
1	74571422	1-1/4" Die Spacer (A)	6915272			1	
2	74383549	Hex Soc Cap Screw	P330240016	M10X70		3	
3	74306022	Washer (M10)	0827013 B			3	
4	74572377	1-1/4" Die Spacer (B)	6915273 A			1	
5	74379658	Grooved Pin	6570463			1	
6	74563132	Ball Plunger	P338182011	BP-8-H	JEC	1	
7	79564305	Hex Soc Cap Screw	P330220006	M6X15		1	
8	74571424	1-1/4" Die Spacer (C)	6915274			1	
9	79564804	Hex Soc Cap Screw	P330230006	M8X20		2	
10	74569824	Brush C-3S	6812866 A			6	
11	31179170	Grease Nipple	P560600002	A-MT6X1		1	
12	74379661	Bite Type Pipe Fitting	P585564037	L4N4X2-PT1/8	NITTA MOORE	1	

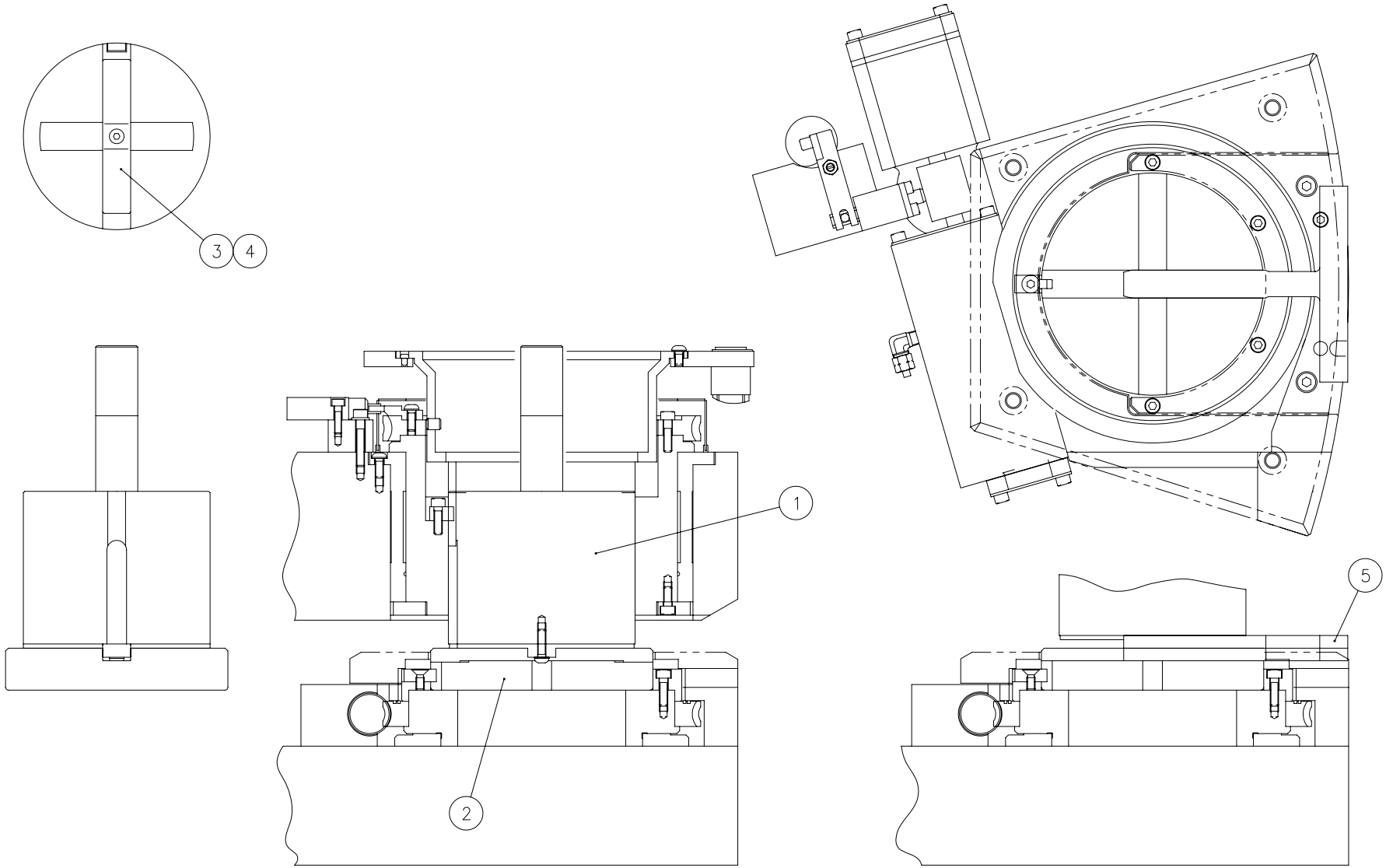

6532990B

Unit No. 131

Turret B-P&F+PV(10) From Serial No.36102001 and after

Index	Code	Parts Name	Drawing No.	Type	Maker	Q'ty	Note
1	74569422	Punch Jig (4-1/2")	6598471			1	
2	74387048	Die Jig (4-1/2")	6532992 A			1	
3	74379790	Key (4-1/2")	6532993			1	
4	74314603	Button Head Screw	P334500016	M6X20		1	
5	74569423	T-type Jig (4-1/2")	6532994 A			2	
6	74375830	T-Type Jig	6010633			1	List Only
7	36389505	Knob	P317264014	PC25X8B	IMAO Mfg	2	List Only
8	36326826	Hex Soc Cap Screw	P330230022	M8X100		2	Accessory (List Only)
9		Lubricating Oil	P238038001	GRP-SPRAY-0.3L	IWATANI Industry	1	Accessory (List Only)

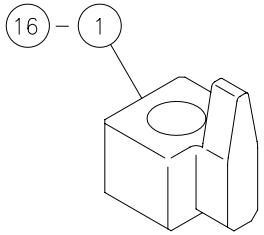

<1/2">

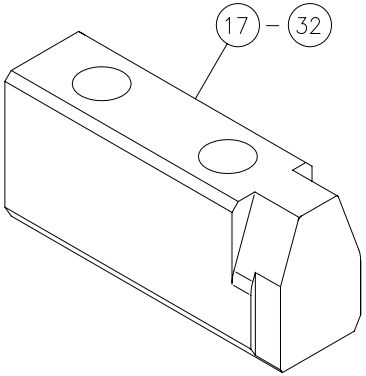

<2">

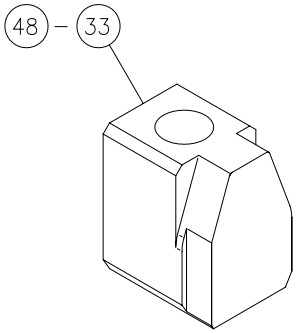

<3–1/2">

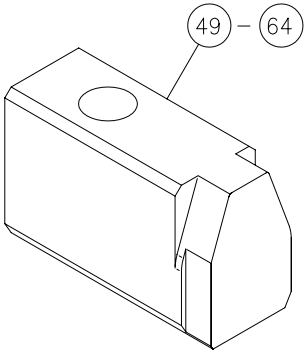

<4–1/2">

740091495

Index	Code	Parts Name	Drawing No.	Type	Maker	Q'ty	Note
1	74419346	1/2" Eccentric Key CW 0.01	300813399			1	
2	74419347	1/2" Eccentric Key CW 0.02	300813398			1	
3	74419348	1/2" Eccentric Key CW 0.03	300813397			1	
4	74419349	1/2" Eccentric Key CW 0.04	300813396			1	
5	74419350	1/2" Eccentric Key CW 0.05	300813395			1	
6	74419351	1/2" Eccentric Key CW 0.06	300813394			1	
7	74419352	1/2" Eccentric Key CW 0.08	300813392			1	
8	74419353	1/2" Eccentric Key CW 0.10	300813390			1	
9	74419354	1/2" Eccentric Key CCW 0.01	300813301			1	
10	74419355	1/2" Eccentric Key CCW 0.02	300813302			1	
11	74419356	1/2" Eccentric Key CCW 0.03	300813303			1	
12	74419357	1/2" Eccentric Key CCW 0.04	300813304			1	
13	74419358	1/2" Eccentric Key CCW 0.05	300813305			1	
14	74419359	1/2" Eccentric Key CCW 0.06	300813306			1	
15	74419360	1/2" Eccentric Key CCW 0.08	300813308			1	
16	74419361	1/2" Eccentric Key CCW 0.10	300813310			1	
17	74419362	2" Eccentric Key CW 0.01	681286499A			1	
18	74419363	2" Eccentric Key CW 0.02	681286498A			1	
19	74419364	2" Eccentric Key CW 0.03	681286497A			1	

Index	Code	Parts Name	Drawing No.	Type	Maker	Q'ty	Note
20	74419365	2" Eccentric Key CW 0.04	681286496A			1	
21	74419366	2" Eccentric Key CW 0.05	681286495A			1	
22	74419367	2" Eccentric Key CW 0.06	681286494A			1	
23	74419368	2" Eccentric Key CW 0.08	681286492A			1	
24	74419369	2" Eccentric Key CW 0.10	681286490A			1	
25	74419370	2" Eccentric Key CCW 0.01	681286401A			1	
26	74419371	2" Eccentric Key CCW 0.02	681286402A			1	
27	74419372	2" Eccentric Key CCW 0.03	681286403A			1	
28	74419373	2" Eccentric Key CCW 0.04	681286404A			1	
29	74419374	2" Eccentric Key CCW 0.05	681286405A			1	
30	74419375	2" Eccentric Key CCW 0.06	681286406A			1	
31	74419376	2" Eccentric Key CCW 0.08	681286408A			1	
32	74419377	2" Eccentric Key CCW 0.10	681286410A			1	
33	74419378	3•1/2" Eccentric Key CW 0.01	681286599A			1	
34	74419379	3•1/2" Eccentric Key CW 0.02	681286598A			1	
35	74419380	3•1/2" Eccentric Key CW 0.03	681286597A			1	
36	74419381	3•1/2" Eccentric Key CW 0.04	681286596A			1	
37	74419382	3•1/2" Eccentric Key CW 0.05	681286595A			1	
38	74419383	3•1/2" Eccentric Key CW 0.06	681286594A			1	

Index	Code	Parts Name	Drawing No.	Type	Maker	Q'ty	Note
39	74419384	3•1/2" Eccentric Key CW 0.08	681286592A			1	
40	74419385	3•1/2" Eccentric Key CW 0.10	681286590A			1	
41	74419386	3•1/2" Eccentric Key CCW 0.01	681286501A			1	
42	74419387	3•1/2" Eccentric Key CCW 0.02	681286502A			1	
43	74419388	3•1/2" Eccentric Key CCW 0.03	681286503A			1	
44	74419389	3•1/2" Eccentric Key CCW 0.04	681286504A			1	
45	74419390	3•1/2" Eccentric Key CCW 0.05	681286505A			1	
46	74419391	3•1/2" Eccentric Key CCW 0.06	681286506A			1	
47	74419392	3•1/2" Eccentric Key CCW 0.08	681286508A			1	
48	74419393	3•1/2" Eccentric Key CCW 0.10	681286510A			1	
49	74417015	4•1/2" Eccentric Key CW 0.01	740091499			1	
50	74417014	4•1/2" Eccentric Key CW 0.02	740091498			1	
51	74417013	4•1/2" Eccentric Key CW 0.03	740091497			1	
52	74417012	4•1/2" Eccentric Key CW 0.04	740091496			1	
53	74417011	4•1/2" Eccentric Key CW 0.05	740091495			1	
54	74417010	4•1/2" Eccentric Key CW 0.06	740091494			1	
55	74417009	4•1/2" Eccentric Key CW 0.08	740091492			1	
56	74417008	4•1/2" Eccentric Key CW 0.10	740091490			1	
57	74417000	4•1/2" Eccentric Key CCW 0.01	740091401			1	

Index	Code	Parts Name	Drawing No.	Type	Maker	Q'ty	Note
58	74417001	4•1/2" Eccentric Key CCW 0.02	740091402			1	
59	74417002	4•1/2" Eccentric Key CCW 0.03	740091403			1	
60	74417003	4•1/2" Eccentric Key CCW 0.04	740091404			1	
61	74417004	4•1/2" Eccentric Key CCW 0.05	740091405			1	
62	74417005	4•1/2" Eccentric Key CCW 0.06	740091406			1	
63	74417006	4•1/2" Eccentric Key CCW 0.08	740091408			1	
64	74417007	4•1/2" Eccentric Key CCW 0.10	740091410			1	

From Serial No.36102001 and after

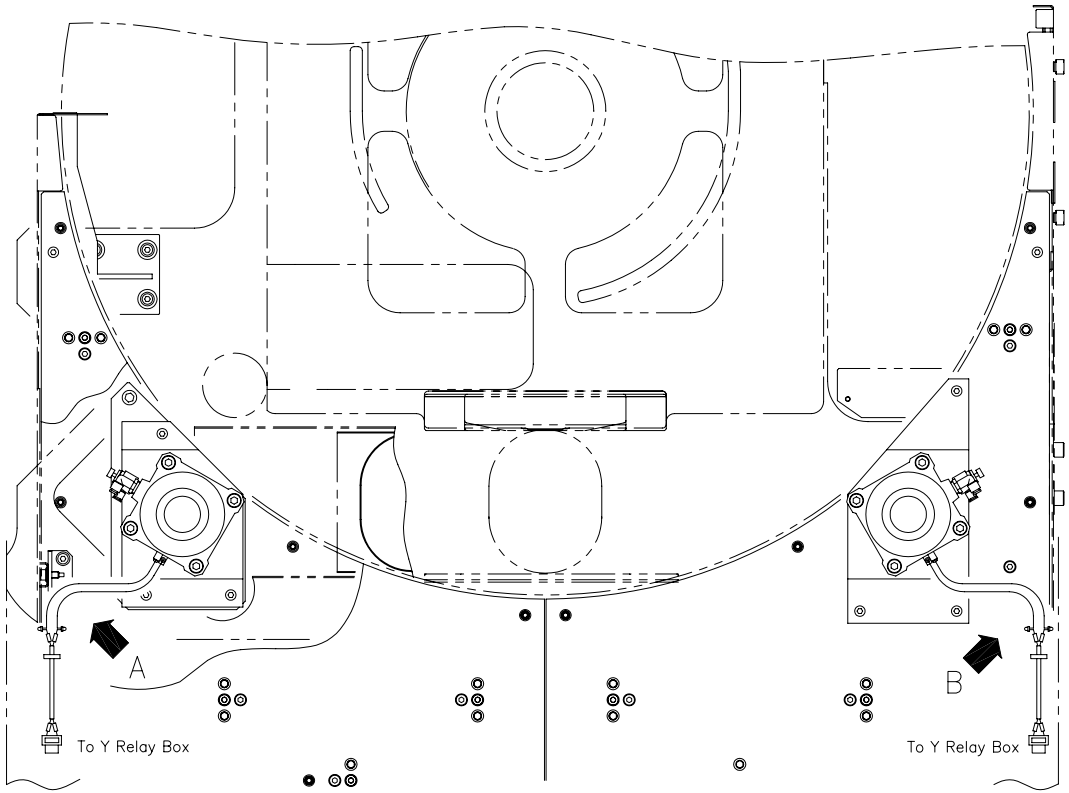

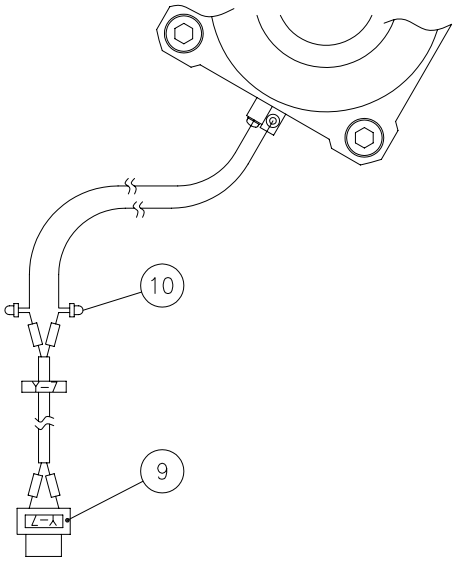

DETAIL A

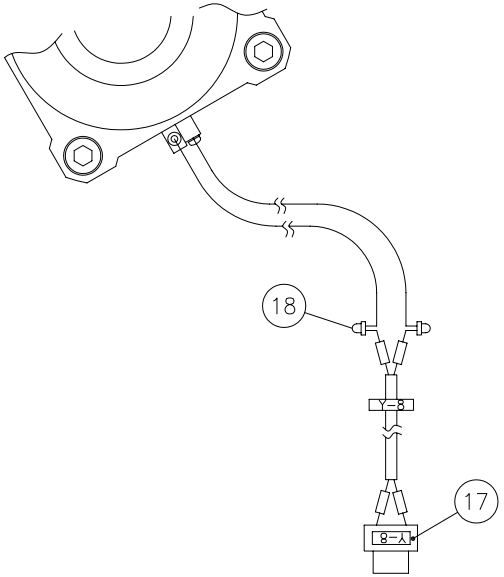

DETAIL B

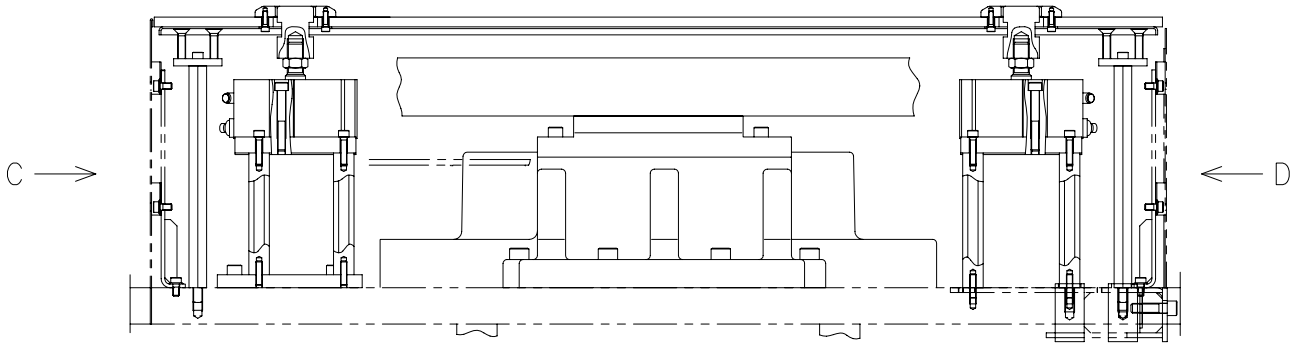

6876365A

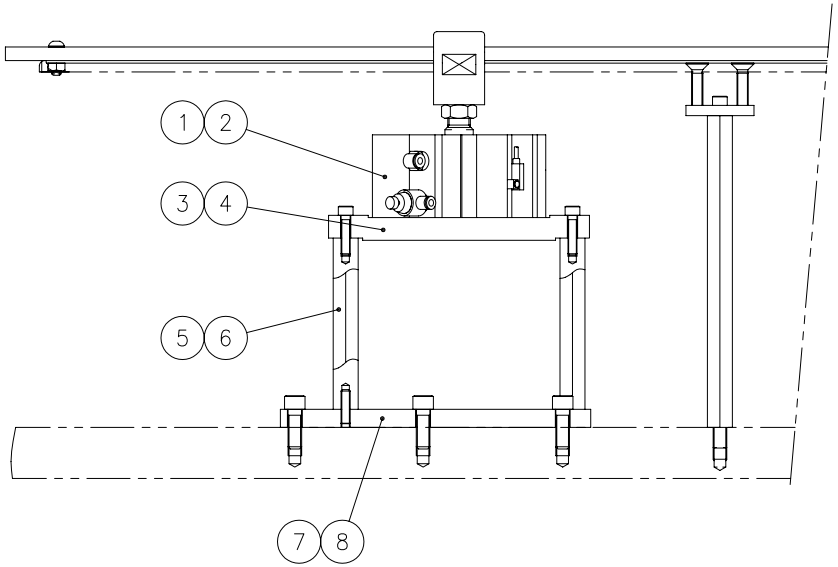

VIEW C

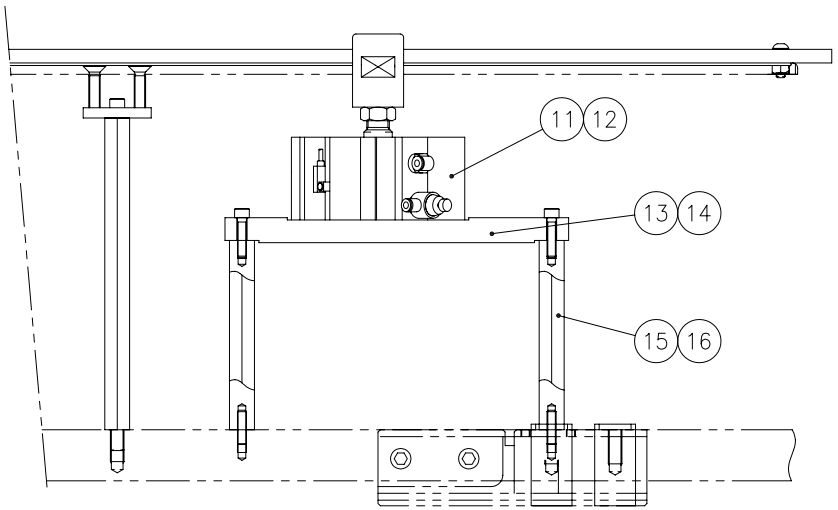

VIEW D

6876365A

Unit No. 133

Support Cylinder

From Serial No.36102001 and after

Index	Code	Parts Name	Drawing No.	Type	Maker	Q'ty	Note
1	74570188	Air Cylinder	7832801	CDQ2B100C	SMC	1	
2	71357836	Hex Soc Cap Screw	P330240018	M10X80		4	
3	74570189	Spacer (Front)	6820376			1	
4	10443022	Hex Soc Cap Screw	P330230009	M8X35		3	
5	74570190	Plate (For Repositioning)(F)	6820377	H22		3	
6	13240902	Socket Set Screw	P330550043	M8X30(Flat-end)		3	
7	74570191	Front Repositioning Base	6820378			1	
8	36110743	Hex Soc Cap Screw	P330250006	M12X35		3	
9	74419144	Cable Y-7	6877630			1	
10	74382938	Terminal	P869150001	CE-1		2	
11	74570188	Air Cylinder	7832801	CDQ2B100C	SMC	1	
12	71357836	Hex Soc Cap Screw	P330240018	M10X80		4	
13	74570192	Spacer (Rear)	6813181			1	
14	10443022	Hex Soc Cap Screw	P330230009	M8X35		3	
15	74570193	Plate (For Repositioning)(R)	6813182	H22		3	
16	13240902	Socket Set Screw	P330550043	M8X30(Flat-end)		3	
17	74419145	Cable Y-8	6877631			1	
18	74382938	Terminal	P869150001	CE-1		2	

From Serial No.36102001 and after

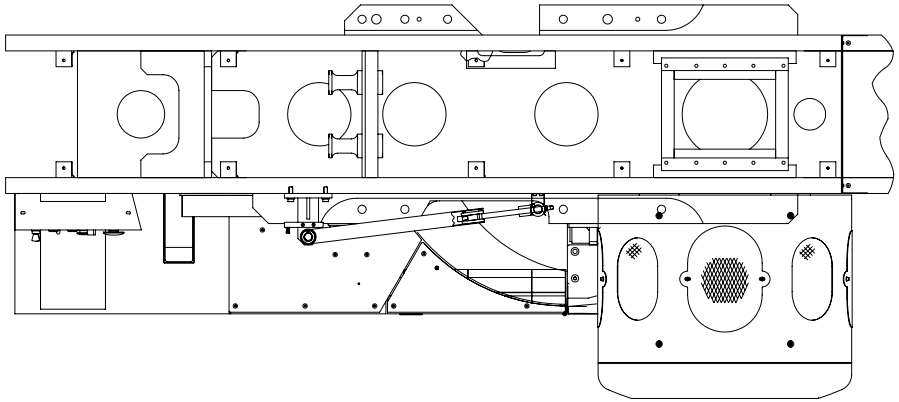

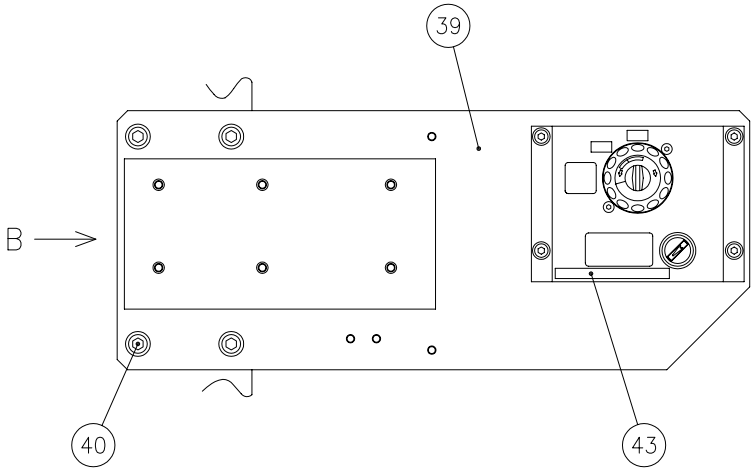

DETAIL A

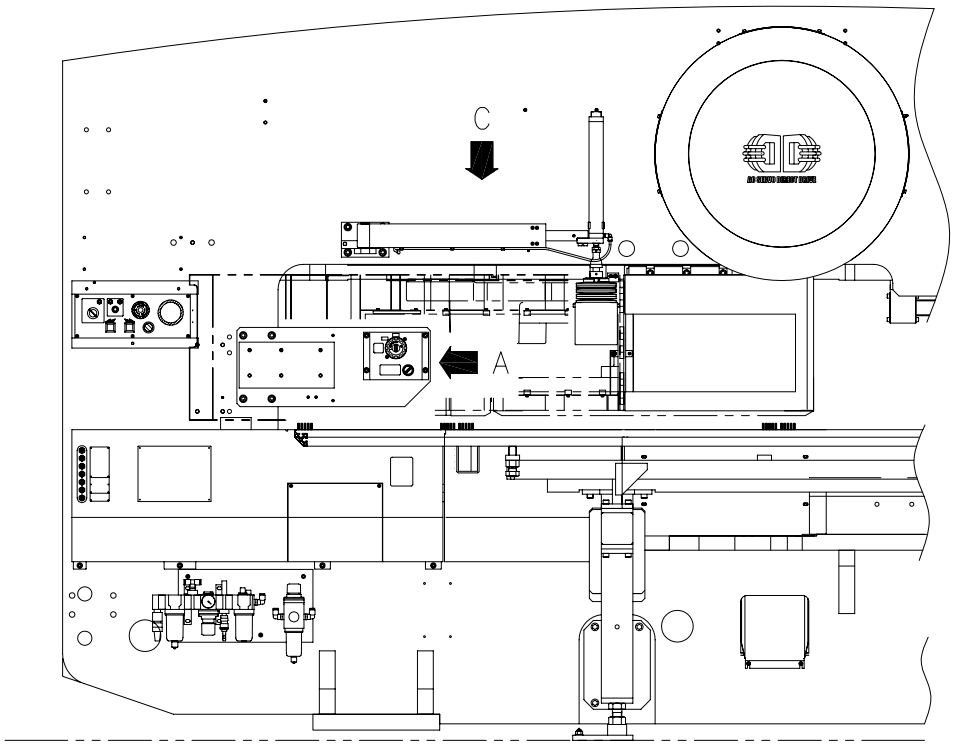

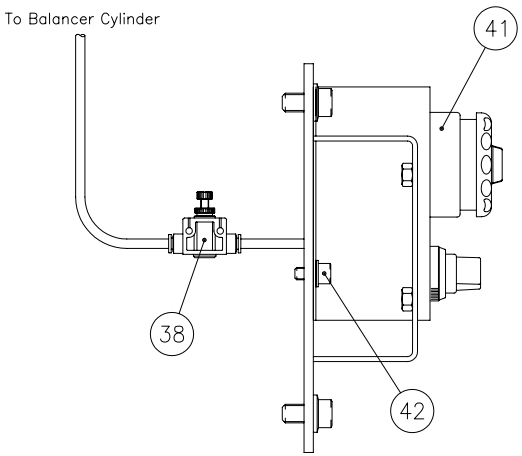

VIEW B

6879650
(6876385)

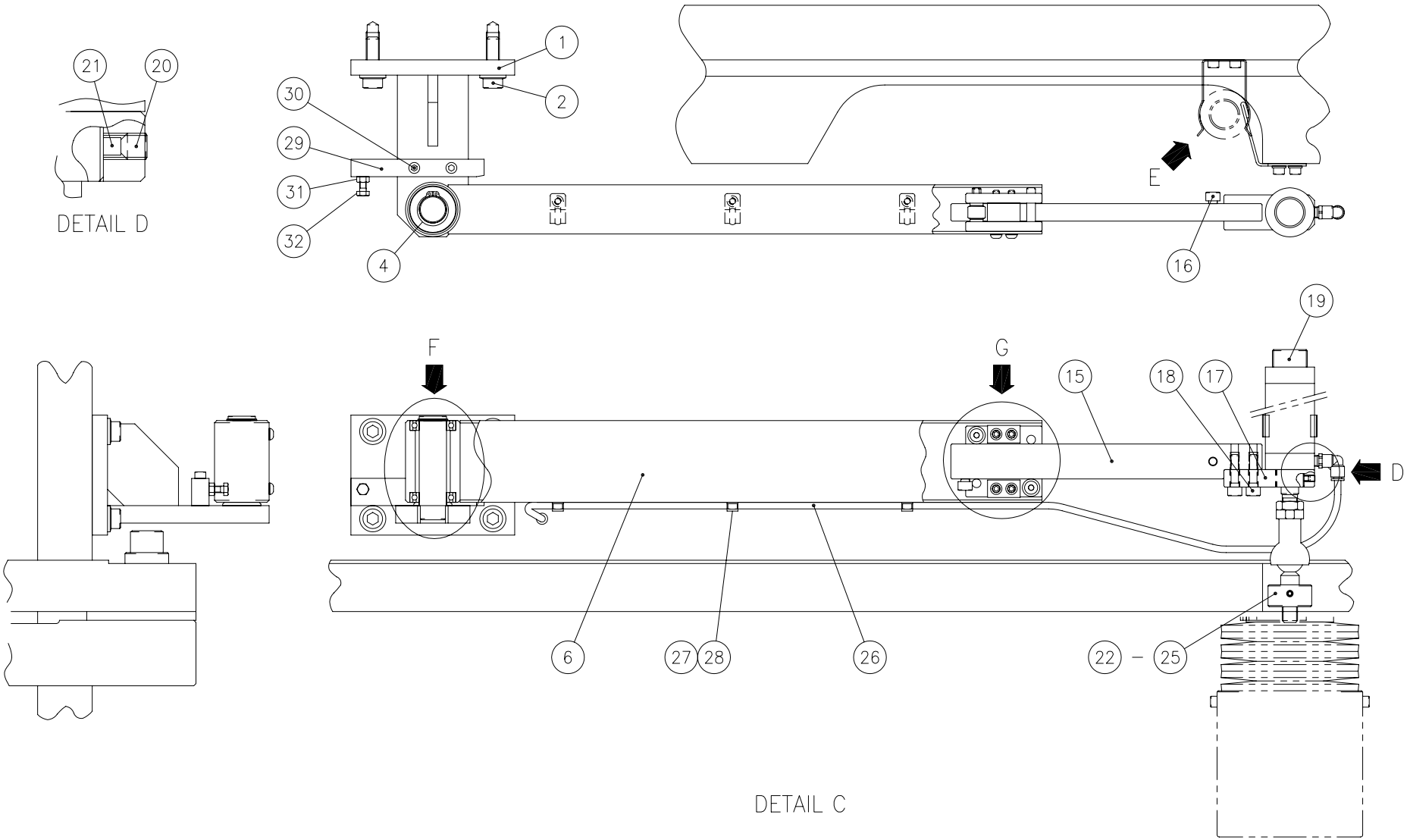

6879650
(6876385)

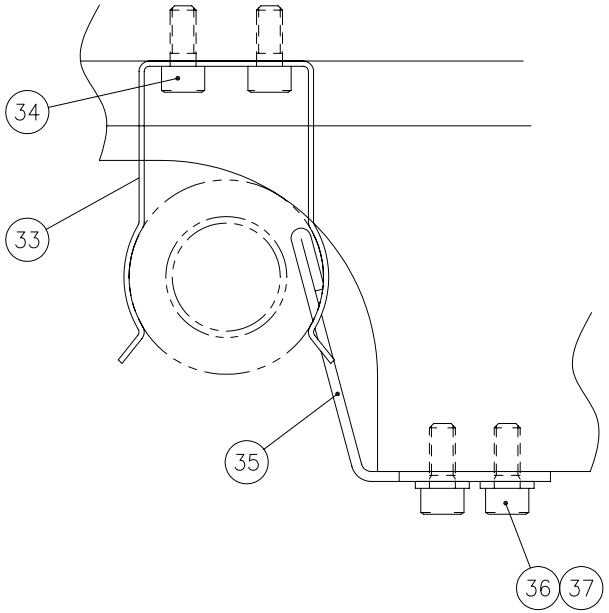

DETAIL E

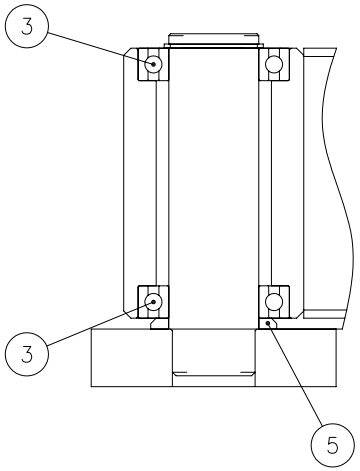

DETAIL F

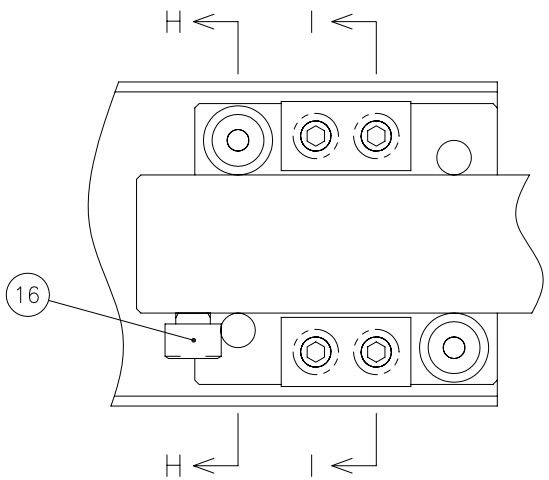

DETAIL G

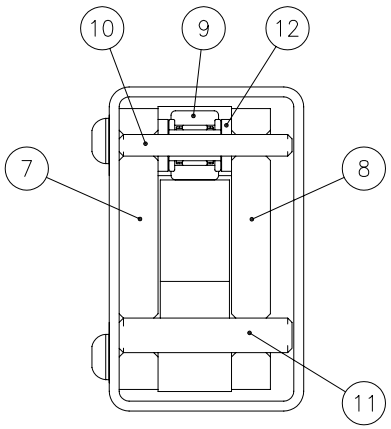

SECTION H–H

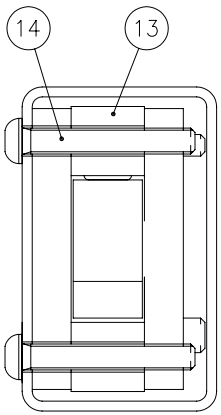

SECTION I–I

6879650
(6876385)

Unit No. 134

Balancer

From Serial No.36102001 and after

Index	Code	Parts Name	Drawing No.	Type	Maker	Q'ty	Note
1	74417171	Arm Bracket	6876241 A			1	
2	45251766	Flange Socket Bolt	P330468033	M12X30	NISSAN NEJI	4	
3	74417172	Deep Groove Ball Bearing	P400010693	6905ZZ	NSK(equality)	2	
4	86264209	Locating Snap Ring	P406108046	STW-25	OCHIAI	1	
5	74417173	Collar	6876247			1	
6	74419394	Balancer Arm	6879147			1	
7	74417175	Roller Bracket (A)	6876243			1	
8	74417176	Roller Bracket (B)	6876244			1	
9	74573647	Roller Follower	P409112065	NART5UUR	THK & other	2	
10	74417177	Guide Bar	P446207042	SFJ5-40	MISUMI	2	
11	74417178	Guide Bar	P446207043	SFJ8-40	MISUMI	2	
12	74417179	Washer	P336238209	WSSB12-5-2	MISUMI	4	
13	74569937	Spacer	6813522			2	
14	10383468	Button Head Screw	P334500037	M6X40		4	
15	74417180	Slider	6876245			1	
16	10323205	Hex Soc Cap Screw	P330230001	M8X10		2	
17	74417181	Cylinder Holder	6876246 A			1	
18	79568702	Hex Soc Cap Screw	P330230008	M8X30		2	
19	74418906	Air Cylinder	7831574	CMA2-00-40-300	CKD	1	

Index	Code	Parts Name	Drawing No.	Type	Maker	Q'ty	Note
20	74306405	Socket Set Screw	P330590017	M6X6(Cup-end)		1	
21	74335701	Insert	0806073			1	
22	74380550	Floating Joint	P409202004	RBI14D	THK	1	
23	31185141	Accessory For Air Cylinder	P550082061	NT-04	SMC	1	
24	74345216	Knob	0819298			1	
25	86620204	Socket Set Screw	P330590019	M6X10(Cup-end)		2	
26	74570235	Plastic Hose	P230222129	U2-4-6X4(Black)-3.5M	NITTA MOORE	1	
27	74563689	Saddle For Conduct	P381017105	PZ0106(D6.2)	DAIWA DENGYO	2	
28	31183033	Hex Soc Cap Screw	P330220003	M6X10		2	
29	74571365	Stopper	6813526 A			1	
30	86283301	Hex Soc Cap Screw	P330220013	M6X35		2	
31	79573514	Nut	P332000071	M6(Type-1)		1	
32	74560323	Bolt	P330020026	M6X30(All-thread)		1	
33	74309526	Catch	6018249 A			1	
34	31183033	Hex Soc Cap Screw	P330220003	M6X10		2	
35	74419395	Cylinder Stopper	6879561			1	
36	31183033	Hex Soc Cap Screw	P330220003	M6X10		2	
37	79565419	Washer	P336000005	6(Regular Round)		2	
38	74568665	Air Flow Control Valve	P555007016	ESU6	NITTA MOORE	1	

Index	Code	Parts Name	Drawing No.	Type	Maker	Q'ty	Note
39	74418907	Control Panel Bracket	6876388			1	
40	45252279	Flange Socket Bolt	P330468035	M12X20	NISSAN NEJI	4	
41	74573237	Balancer Operation Panel	7832785 A	TSB-E-AMA-BAL-UN176-	CKD	1	
42	74382078	Flange Socket Bolt	P330468006	M8X15	NISSAN NEJI	4	
43	74563020	Legend Plate (Balancer)(3)	7408813			1	English
43	74563023	Legend Plate (Balancer)(3)	7408833			1	French
43	74563022	Legend Plate (Balancer)(3)	7408828			1	German
43	74563021	Legend Plate (Balancer)(3)	7408823			1	Italian
43	74419396	Legend Plate (Balancer)(3)	6817541			1	Chinese

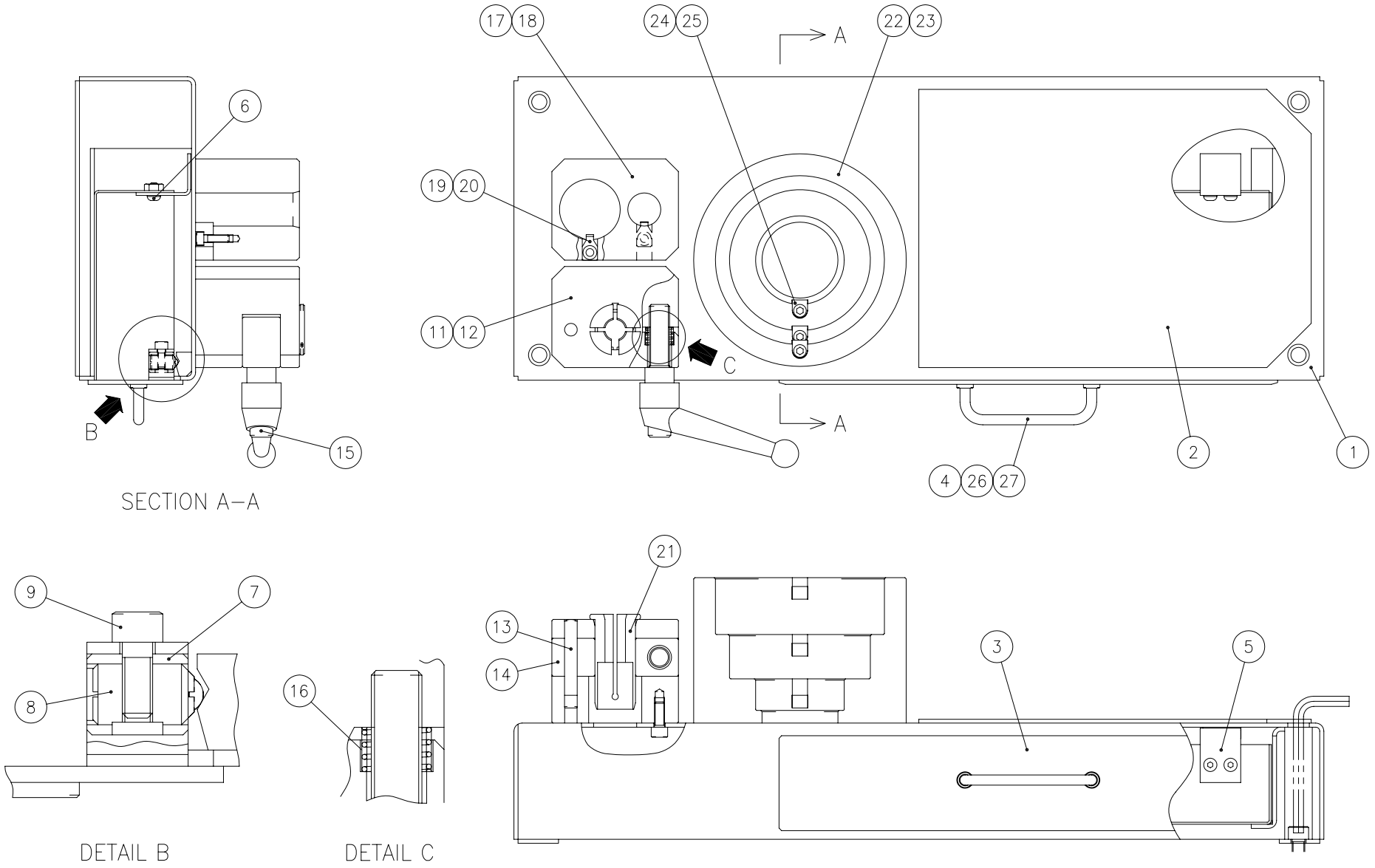
17
18
24
25
22
23
A
6
19
20
11
12
C
B
15
A
2
1
4
26
27
SECTION A–A
21
9
7
13
14
3
5
8
16
DETAIL B
DETAIL C
0819310A

Unit No. 135

Punch Assembling Jig

From Serial No.36102001 and after

Index	Code	Parts Name	Drawing No.	Type	Maker	Q'ty	Note
1	75428102	Workbench	0819311			1	
2	75428103	Rubber Sheet	0819312	E8/2U0/V10,SG (Green)		1	
3	75428104	Case	0819313			1	
4	71366861	Grip	P317122010	A-1042-C-6	TAKIGEN	1	
5	75428105	Stopper	0819314			2	
6	36379029	Button Head Screw	P334500013	M6X10		4	
7	75428109	Latchet Block	0827066			1	
8	74570287	Ball Plunger	P338182013	BP-12-H	JEC	1	
9	79564305	Hex Soc Cap Screw	P330220006	M6X15		2	
10	74165506	Belt Wrench	P350333001	BW-2	Super Tool	1	List Only
11	74346301	Clamp Body	0827058 B			1	
12	79564804	Hex Soc Cap Screw	P330230006	M8X20		4	
13	74570288	Parallel Pin	P337020064	A-10X70		1	
14	74306032	Clamper	0827059			1	
15	74372401	Lever	P437354016	KR16X50	IMAO Mfg	1	
16	74306101	Return Spring	0827060			1	
17	74346207	Short Diameter Jig	0828087			1	
18	79564804	Hex Soc Cap Screw	P330230006	M8X20		4	
19	74306160	Key	0828067			2	

Punch Assembling Jig

From Serial No.36102001 and after

Index	Code	Parts Name	Drawing No.	Type	Maker	Q'ty	Note
20	79567722	Hex Soc Cap Screw	P330220009	M6X20		2	
21	74563867	Bushing	0827073 A			1	
22	74306110	Die Jig	0828086			1	
23	79566121	Hex Soc Cap Screw	P330230007	M8X25		4	
24	74306161	Key	0828088 A			3	
25	79567722	Hex Soc Cap Screw	P330220009	M6X20		3	
26	74570294	Decorative Washer	P336258003	A-1042-W-3	TAKIGEN	1	
27	79573416	Hex Soc Cap Screw	P330210003	M5X10		2	

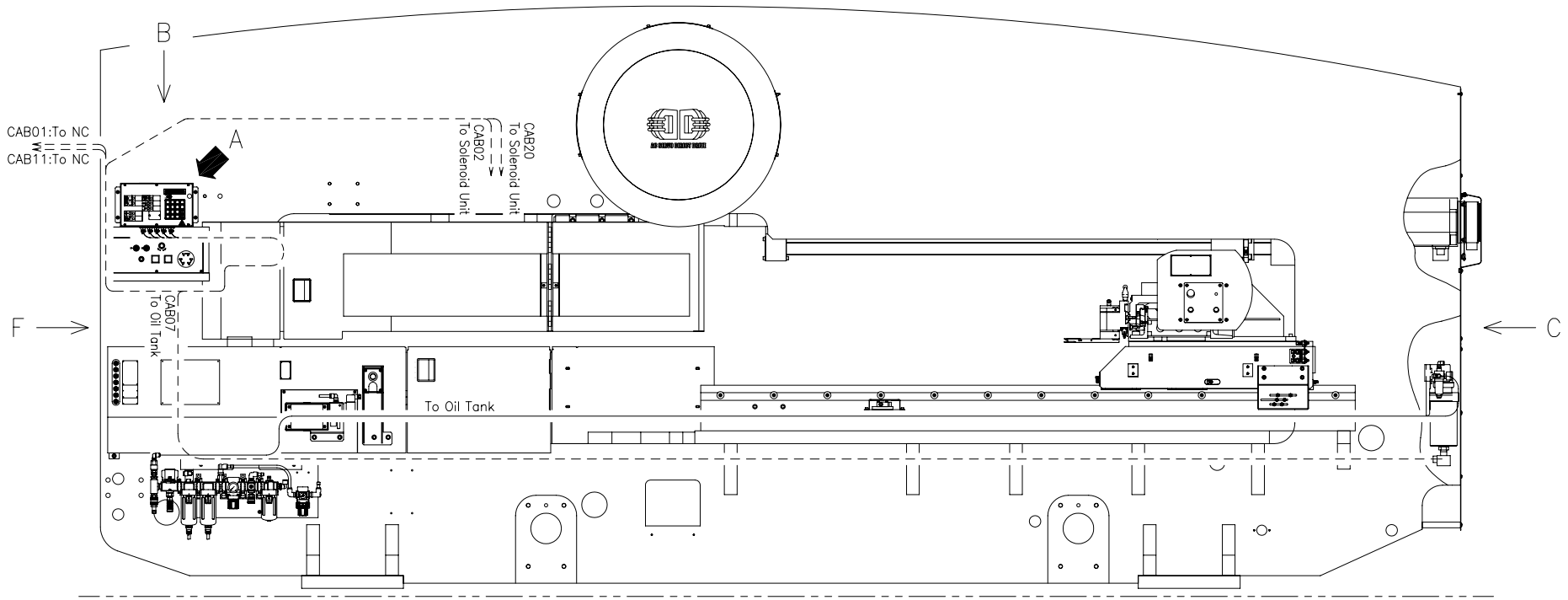

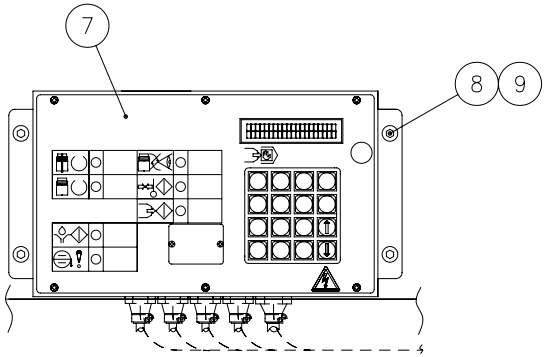

DETAIL A

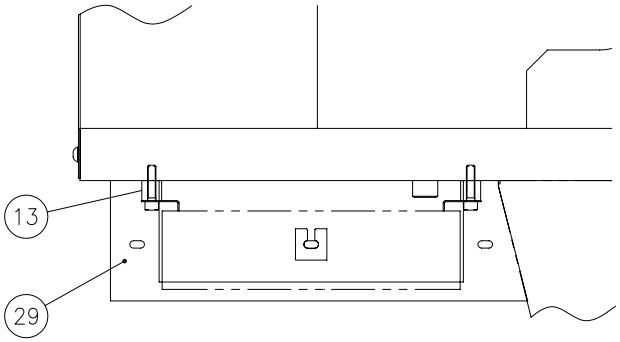

VIEW B

6877746
(6877745)

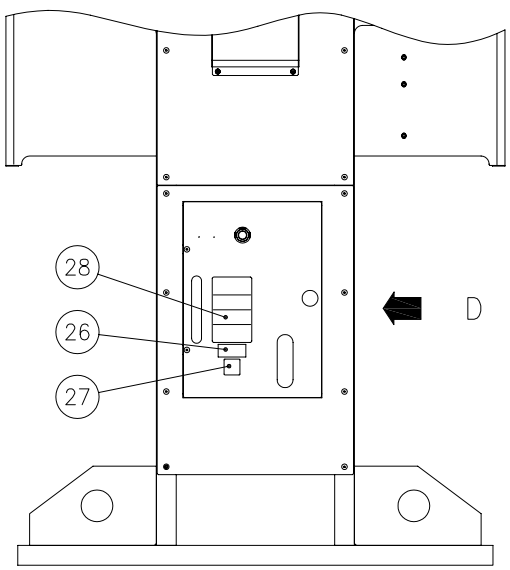

VIEW C

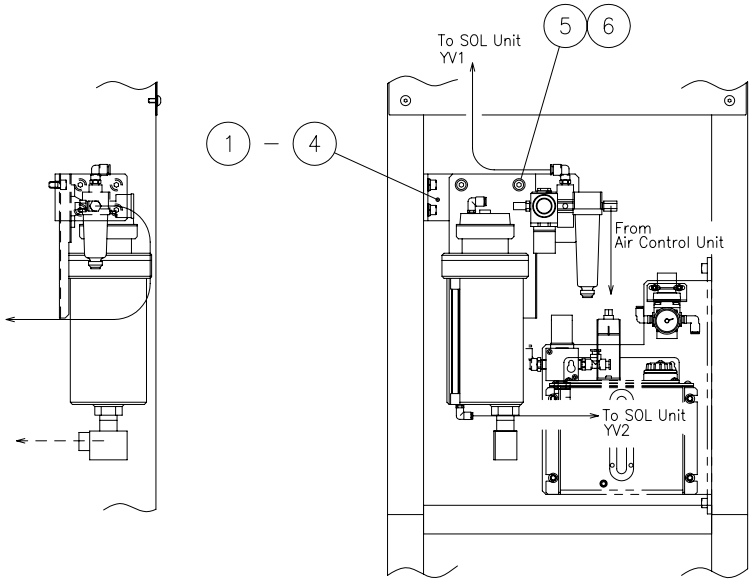

DETAIL D

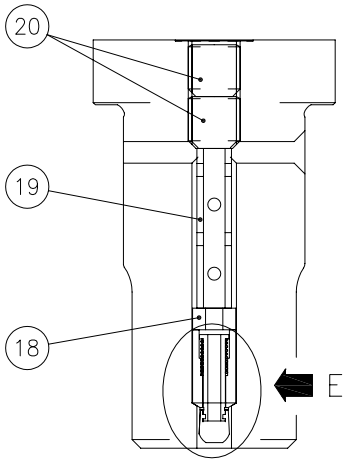

Punch Detail

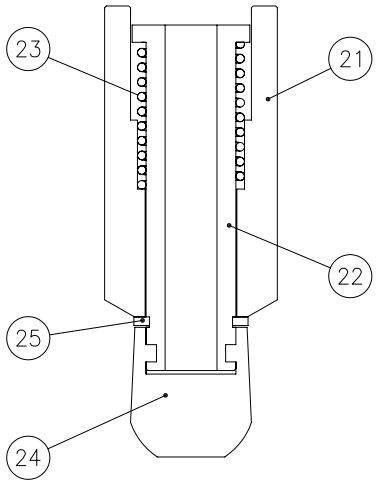

DETAIL E

6877746
(6877745)

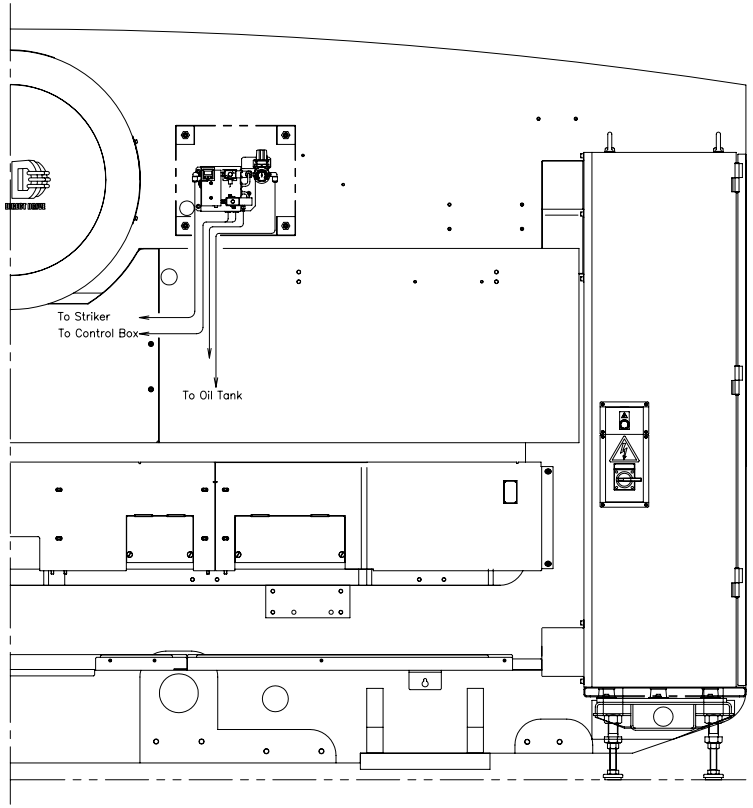

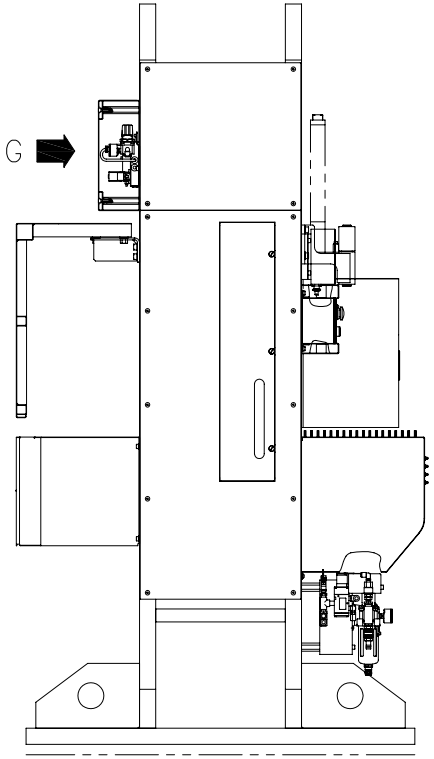

VIEW F

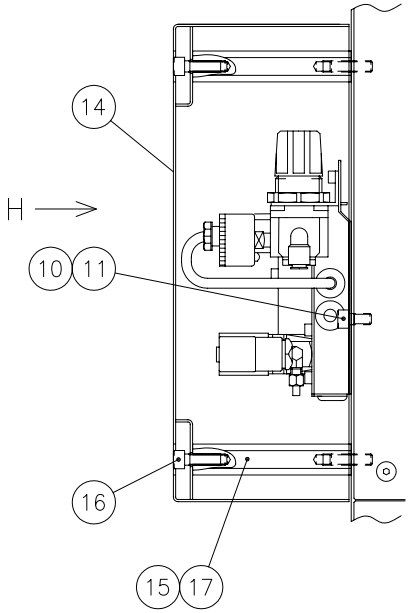

DETAIL G

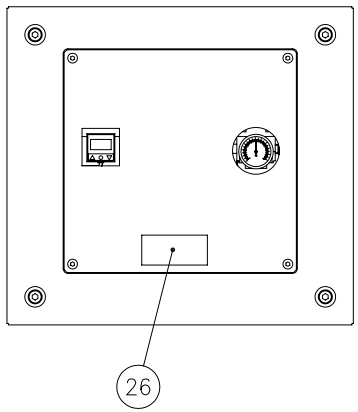

VIEW H

6877746
(6877745)

Air Blower V•EX(1) From Serial No.36102001 and after

Index	Code	Parts Name	Drawing No.	Type	Maker	Q'ty	Note
1	74415727	Bracket (Tank)	6829101			1	
2	79566121	Hex Soc Cap Screw	P330230007	M8X25		4	
3	86610326	Spring Washer	P336050006	8		4	
4	79567109	Washer	P336000006	8(Regular Round)		4	
5	79565423	Hex Soc Cap Screw	P330230004	M8X15		2	
6	79567109	Washer	P336000006	8(Regular Round)		2	
7	74417184	Air Blow V (EX) Unit	7831555			1	EXP
7	74417185	Air Blow V (EX) Unit	7831556			1	CE
8	79565423	Hex Soc Cap Screw	P330230004	M8X15		4	
9	79567109	Washer	P336000006	8(Regular Round)		4	
10	79565423	Hex Soc Cap Screw	P330230004	M8X15		3	
11	79567109	Washer	P336000006	8(Regular Round)		3	
12		Lubricating Oil	P238025010	1L	AMADA	1	List Only
13	74571442	Spacer (Air Blow)	6822953			2	
14	74417186	Sensor SOL Unit Cover	6876587			1	
15	74417187	Stud (Unit)	6876593	H22		4	
16	74382078	Flange Socket Bolt	P330468006	M8X15	NISSAN NEJI	4	
17	13240902	Socket Set Screw	P330550043	M8X30(Flat-end)		4	
18	74417189	Collar	6872941			1	

Index	Code	Parts Name	Drawing No.	Type	Maker	Q'ty	Note
19	74417190	Pipe	6872942			1	
20	10338107	Socket Set Screw	P330550058	M12X12(Flat-end)		2	
21	74417191	Plunger Assy	783155902			1	
22	74417192	Plunger Assy	783155903			1	
23	74417193	Plunger Assy	783155904			1	
24	74417194	Plunger Assy	783155905			1	
25	86314470	C Ring		STWN5		1	
26	74386340	Legend Plate (Pneumatic)	6045138 A			2	CE,EXP
26	74419461	Legend Plate (Pneumatic)	6817500			2	Chinese
27	74383832	Legend Plate (Air Blow)	6593003			1	
28	74388268	Legend Plate (Air Blow)	6502766 C			1	CE,EXP
28	74419397	Legend Plate (Air Blow)	6817503			1	Chinese
29	74419398	Sub Control Box Cover	6877998			1	
30	74417195	Legend Plate 2 (Caution)	680012702A			1	CE,EXP (List Only)
30	74419399	Legend Plate 2 (Caution)	6817502			1	Chinese (List Only)

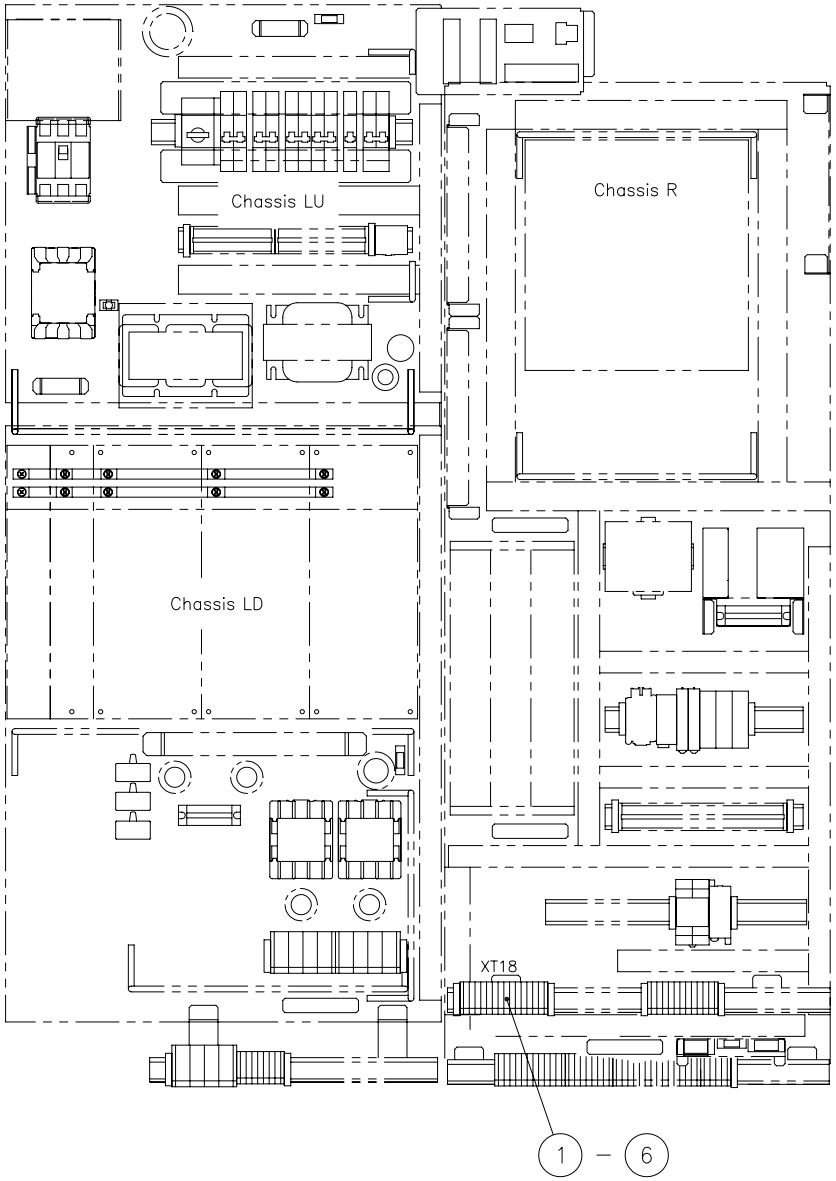

Control Panel

6701376#1

Air Blower V•EX(2) From Serial No.36102001 and after

Index	Code	Parts Name	Drawing No.	Type	Maker	Q'ty	Note
1	75428211	Block Terminal	P864002026	BN15MW	IDEC	14	XT18
2	31182112	Terminal Parts	P864052019	BNE15W	IDEC	2	(XT18)
3	31201097	Terminal Parts	P864052020	BNJ26FW	IDEC	1	(XT18)
4	74418908	Terminal Label	P864072063	BNM7(114)	IDEC	1	(XT18)
5	74418909	Terminal Cover	P864062101	BNC230(125)	IDEC	1	(XT18)
6	74418910	WP116	670285316			1	

Work Jamming Sensor(1) <For STD>

From Serial No.36102001 and after

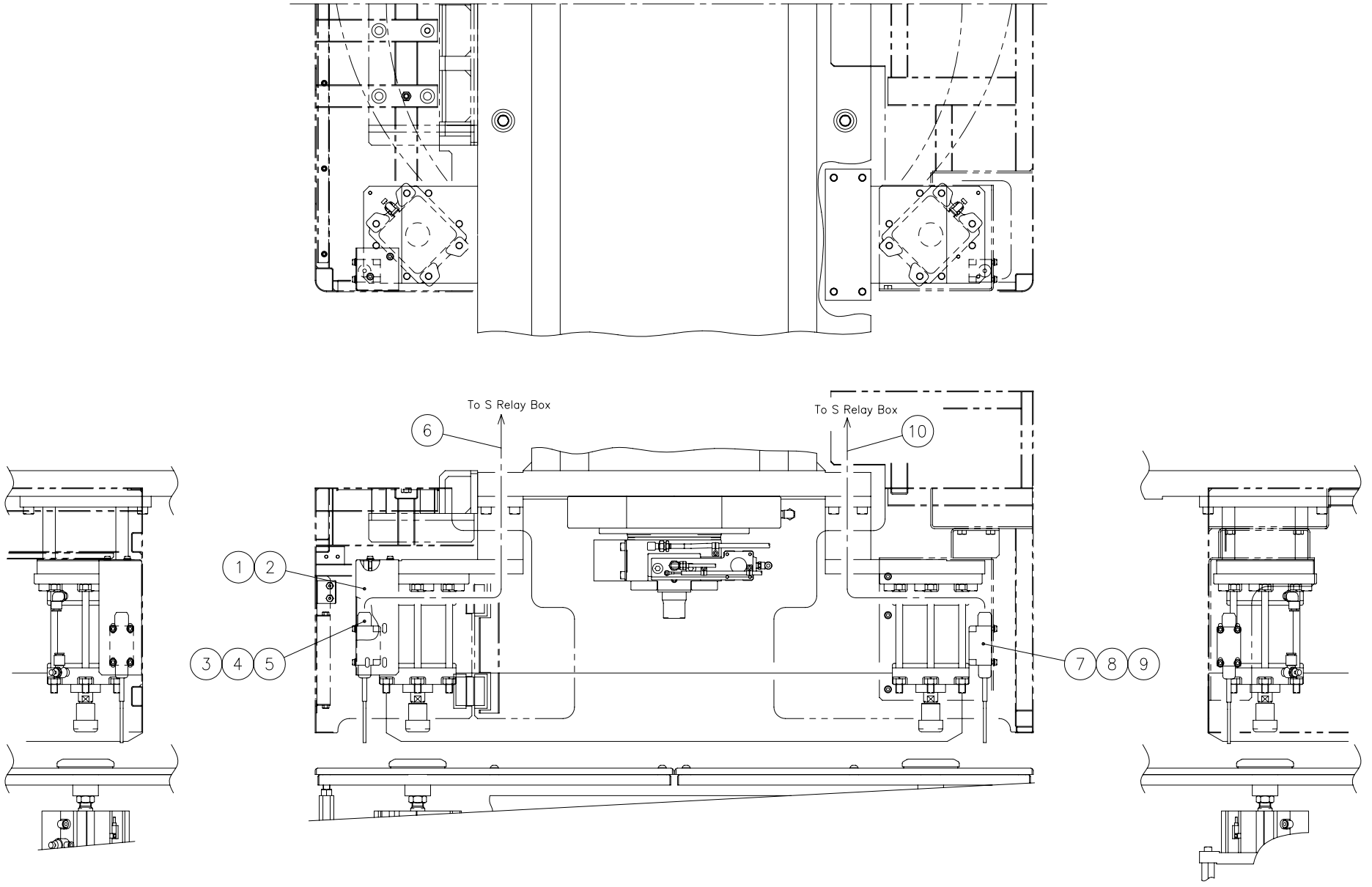

Unit No. 138

Work Jamming Sensor(1) From Serial No.36102001 and after

Index	Code	Parts Name	Drawing No.	Type	Maker	Q'ty	Note
1	74419401	Sensor Bracket	6878004			1	
2	45252001	Flange Socket Bolt	P330460003	M6X15		2	
3	74570313	Limit Switch	P828003037	8LS3-J	YAMATAKE	1	
4	45252001	Flange Socket Bolt	P330460003	M6X15		4	
5	74570314	Accessory For Limit Switch	P828103002	PA4-N2	YAMATAKE	1	
6	74419146	Cable (S-12B)	6876372 A			1	
7	74570313	Limit Switch	P828003037	8LS3-J	YAMATAKE	1	
8	45252001	Flange Socket Bolt	P330460003	M6X15		4	
9	74570314	Accessory For Limit Switch	P828103002	PA4-N2	YAMATAKE	1	
10	74419147	Cable (S-12A)	6876374 A			1	

Work Jamming Sensor(2) <For Multi Tapping>

From Serial No.36102001 and after

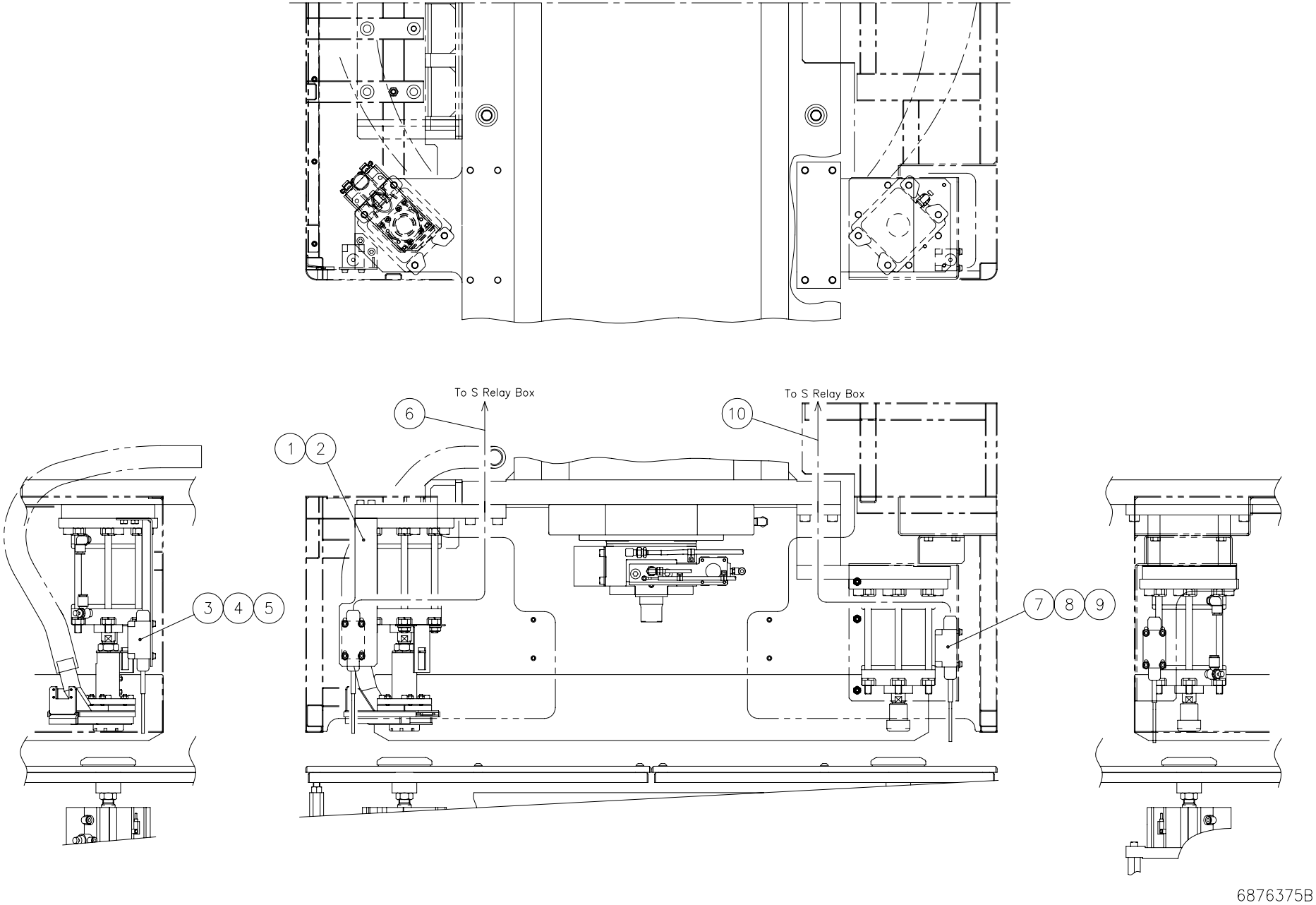

Unit No. 139

Work Jamming Sensor(2) From Serial No.36102001 and after

Index	Code	Parts Name	Drawing No.	Type	Maker	Q'ty	Note
1	74419402	Sensor Bracket MTDT	6878904			1	
2	44420153	Flange Socket Bolt	P330468016	M8X35	NISSAN NEJI	2	
3	74570313	Limit Switch	P828003037	8LS3-J	YAMATAKE	1	
4	45252001	Flange Socket Bolt	P330460003	M6X15		4	
5	74570314	Accessory For Limit Switch	P828103002	PA4-N2	YAMATAKE	1	
6	74419146	Cable (S-12B)	6876372 A			1	
7	74570313	Limit Switch	P828003037	8LS3-J	YAMATAKE	1	
8	45252001	Flange Socket Bolt	P330460003	M6X15		4	
9	74570314	Accessory For Limit Switch	P828103002	PA4-N2	YAMATAKE	1	
10	74419147	Cable (S-12A)	6876374 A			1	

From Serial No.36102001 and after

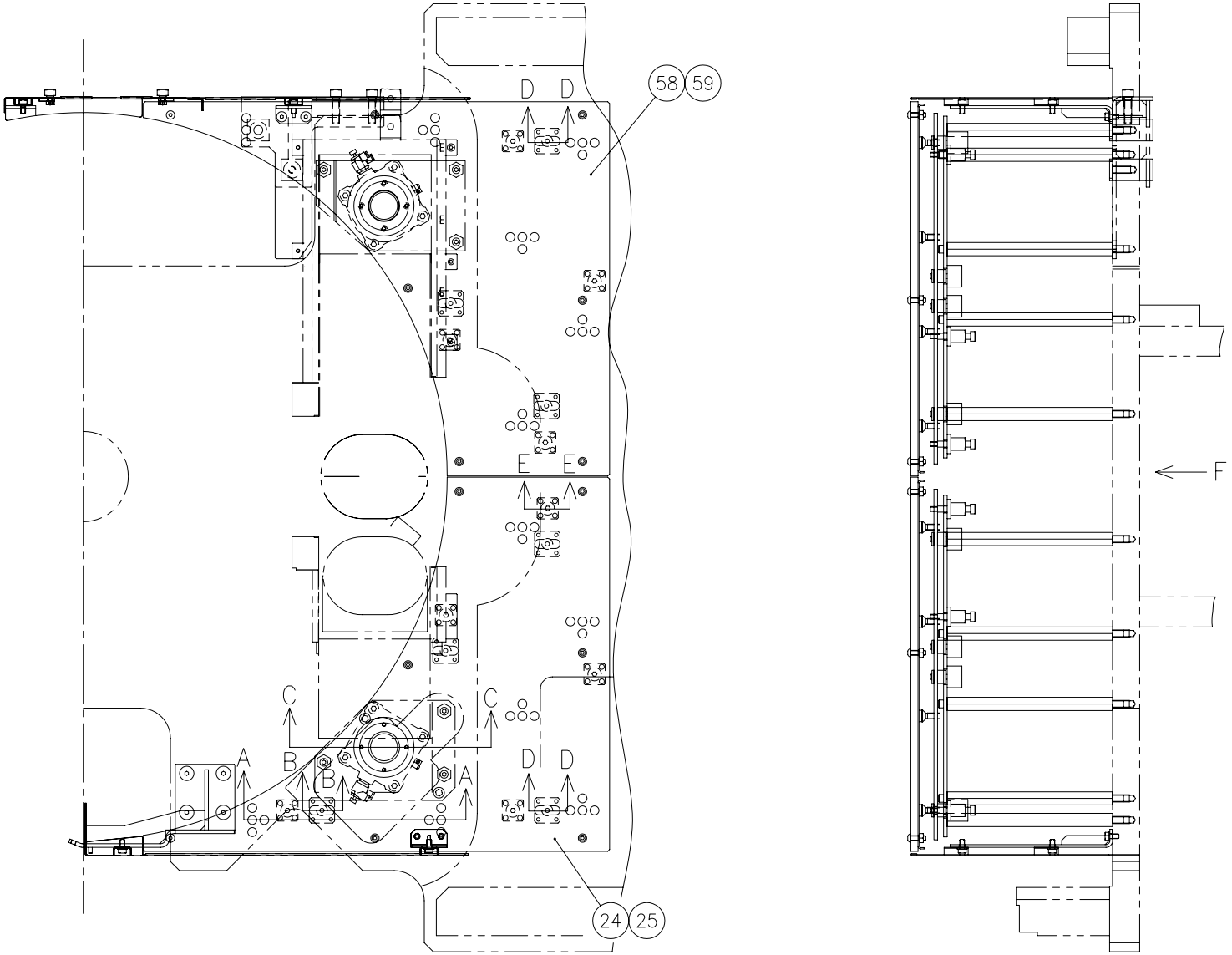

6875530A

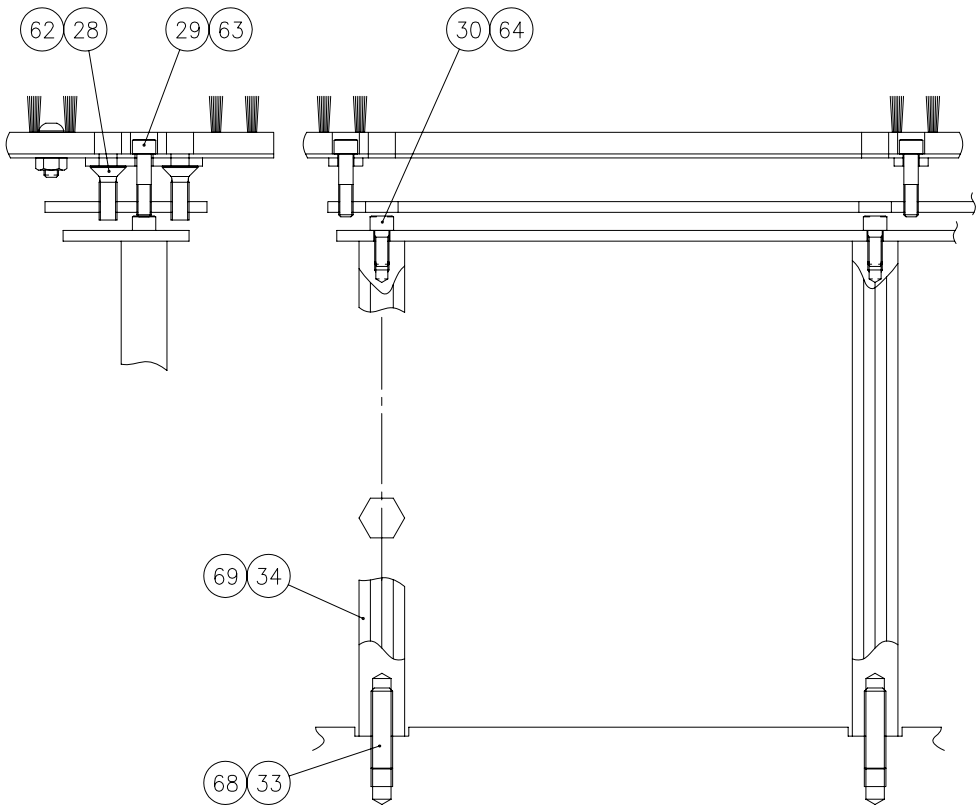

SECTION A–A

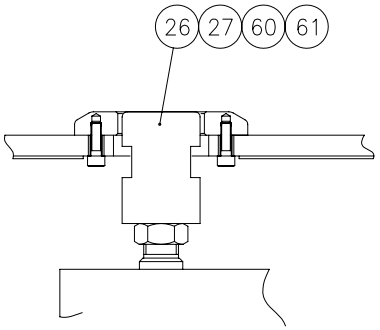

SECTION C–C

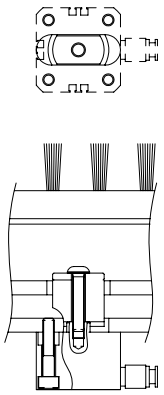

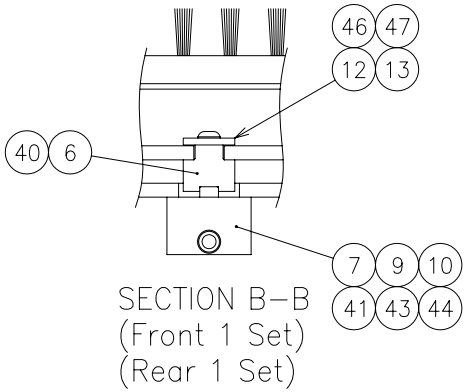

SECTION B–B
(Front 1 Set)
(Rear 1 Set)

6875530A

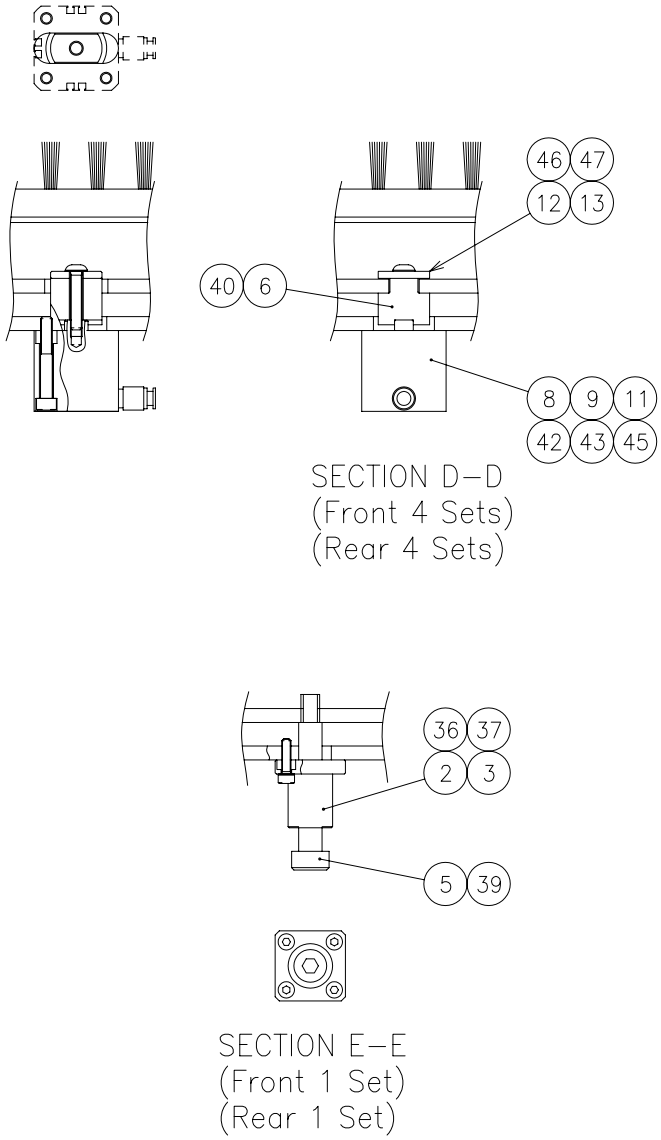
46 47
12 13
40 6
8 9 11
42 43 45
SECTION D–D
(Front 4 Sets)
(Rear 4 Sets)
36 37
2 3
5 39
SECTION E–E
(Front 1 Set)
(Rear 1 Set)

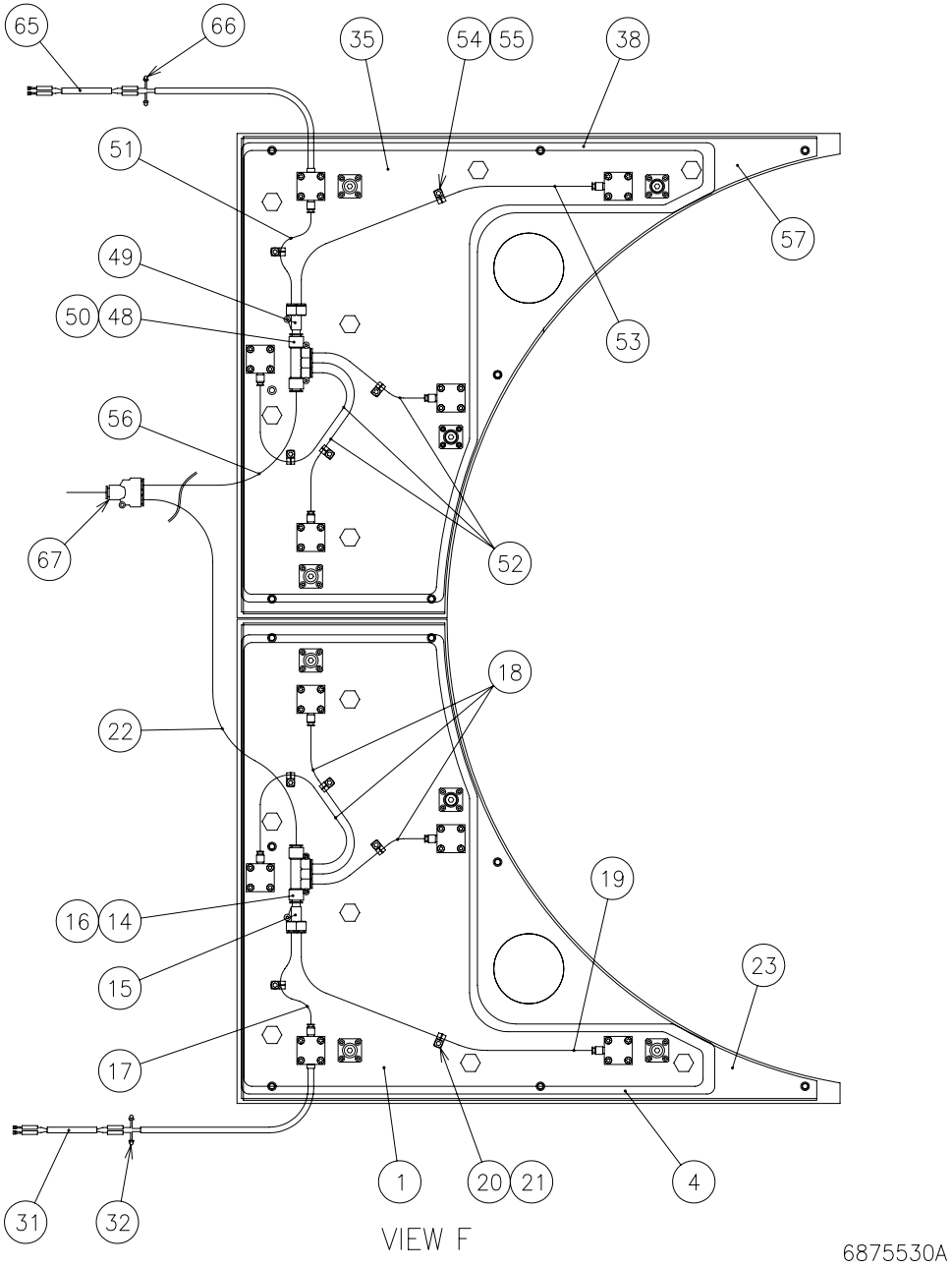
65
66
35
54 55
38
51
57
49
50 48
53
56
67
52
18
22
19
16 14
23
15
17
1
20 21
4
31
32
VIEW F
6875530A

Unit No. 140

Floating Brush(1) From Serial No.36102001 and after

Index	Code	Parts Name	Drawing No.	Type	Maker	Q'ty	Note
1	74419149	Cylinder Base (F)	6873720			1	
2	74419158	Way Bearing	P446002045	LMK10	THK	4	
3	86620301	Hex Soc Cap Screw	P330200018	M4X15		16	
4	74419150	Repositioning Table Base (F)	6873721			1	
5	74382660	Shoulder Bolt	P338134008	MSB10-60	MISUMI	4	
6	74419160	Cylinder Collar	6873548			5	
7	74565357	Pneumatic Cylinder	P550006176	SSD-X-20-5	CKD	4	
8	74565356	Pneumatic Cylinder	P550006178	SSD-XL-20-5-T0H-D	CKD	1	
9	74565358	Instant Fitting	P586538091	GWS6-M5-S	CKD	5	
10	79316111	Hex Soc Cap Screw	P330210010	M5X25		16	
11	10443103	Hex Soc Cap Screw	P330210012	M5X35		4	
12	74565360	Washer	7407545			5	
13	71371539	Button Head Screw	P334500061	M5X25		5	
14	74568611	Instant Fitting	P586703001	KM13-06-10-3	SMC	1	
15	74419161	Instant Fitting	P586628088	GWP610-Y	CKD	1	
16	86631339	Hex Soc Cap Screw	P330200022	M4X25		2	
17	71371426	Plastic Hose	P230222084	N2-4-6X4(Black)-0.2M	NITTA MOORE	1	
18	71371426	Plastic Hose	P230222163	N2-4-6X4(Black)-0.3M	NITTA MOORE	3	
19	71371426	Plastic Hose	P230222170	N2-4-6X4(Black)-0.5M	NITTA MOORE	1	

Floating Brush(1) From Serial No.36102001 and after

Index	Code	Parts Name	Drawing No.	Type	Maker	Q'ty	Note
20	74563689	Saddle For Conduct	P381017105	PZ0106(D6.2)	DAIWA DENGYO	5	
21	31183033	Hex Soc Cap Screw	P330220003	M6X10		5	
22	71371423	Plastic Hose	P230242076	N2-4-10X8(Black)-1.5M	NITTA MOORE	1	
23	74419151	Repositioning Brush Base (F)	6872228 A			1	
24	74419152	MDF Brush (Repositioning F)	6879268			1	
25	74722756	Button Head Screw	P334500021	M8X25		7	
26	74379286	Support Ring	6573538			1	Front
27	79567722	Hex Soc Cap Screw	P330220009	M6X20		4	Front
28	74379291	Flat Head Bolt	P334520028	M10X30		12	
29	10443022	Hex Soc Cap Screw	P330230009	M8X35		6	
30	79564804	Hex Soc Cap Screw	P330230006	M8X20		6	
31	74418221	Cable FB-6	6524951			1	
32	74382938	Terminal	P869150001	CE-1		2	
33	74386882	Socket Set Screw	P330550118	M12X45(Flat-end)		1	
34	74417382	Stud (Table Base)	6873284			1	
35	74419157	Cylinder Base (R)	6873725			1	
36	74419158	Way Bearing	P446002045	LMK10	THK	4	
37	86620301	Hex Soc Cap Screw	P330200018	M4X15		16	
38	74419159	Repositioning Table Base (R)	6873726			1	

Floating Brush(1) From Serial No.36102001 and after

Index	Code	Parts Name	Drawing No.	Type	Maker	Q'ty	Note
39	74382660	Shoulder Bolt	P338134008	MSB10-60	MISUMI	4	
40	74419160	Cylinder Collar	6873548			5	
41	74565357	Pneumatic Cylinder	P550006176	SSD-X-20-5	CKD	4	
42	74565356	Pneumatic Cylinder	P550006178	SSD-XL-20-5-T0H-D	CKD	1	
43	74565358	Instant Fitting	P586538091	GWS6-M5-S	CKD	5	
44	79316111	Hex Soc Cap Screw	P330210010	M5X25		16	
45	10443103	Hex Soc Cap Screw	P330210012	M5X35		4	
46	74565360	Washer	7407545			5	
47	71371539	Button Head Screw	P334500061	M5X25		5	
48	74568611	Instant Fitting	P586703001	KM13-06-10-3	SMC	1	
49	74419161	Instant Fitting	P586628088	GWP610-Y	CKD	1	
50	86631339	Hex Soc Cap Screw	P330200022	M4X25		2	
51	71371426	Plastic Hose	P230222084	N2-4-6X4(Black)-0.2M	NITTA MOORE	1	
52	71371426	Plastic Hose	P230222163	N2-4-6X4(Black)-0.3M	NITTA MOORE	3	
53	71371426	Plastic Hose	P230222170	N2-4-6X4(Black)-0.5M	NITTA MOORE	1	
54	74563689	Saddle For Conduct	P381017105	PZ0106(D6.2)	DAIWA DENGYO	5	
55	31183033	Hex Soc Cap Screw	P330220003	M6X10		5	
56	71371423	Plastic Hose	P230242076	N2-4-10X8(Black)-1.5M	NITTA MOORE	1	
57	74419163	Repositioning Brush Base (R)	6872232 A			1	

Floating Brush(1) From Serial No.36102001 and after

Index	Code	Parts Name	Drawing No.	Type	Maker	Q'ty	Note
58	74419164	MDF Brush (Repositioning R)	6879269			1	
59	74722756	Button Head Screw	P334500021	M8X25		7	
60	74379286	Support Ring	6573538			1	Rear
61	79567722	Hex Soc Cap Screw	P330220009	M6X20		4	Rear
62	74379291	Flat Head Bolt	P334520028	M10X30		12	
63	10443022	Hex Soc Cap Screw	P330230009	M8X35		6	
64	79564804	Hex Soc Cap Screw	P330230006	M8X20		6	
65	74418222	Cable FB-7	6524952			1	
66	74382938	Terminal	P869150001	CE-1		2	
67	10375623	Instant Fitting	P586624003	EYB10-10	NITTA MOORE	1	
68	74386882	Socket Set Screw	P330550118	M12X45(Flat-end)		1	
69	74417382	Stud (Table Base)	6873284			1	

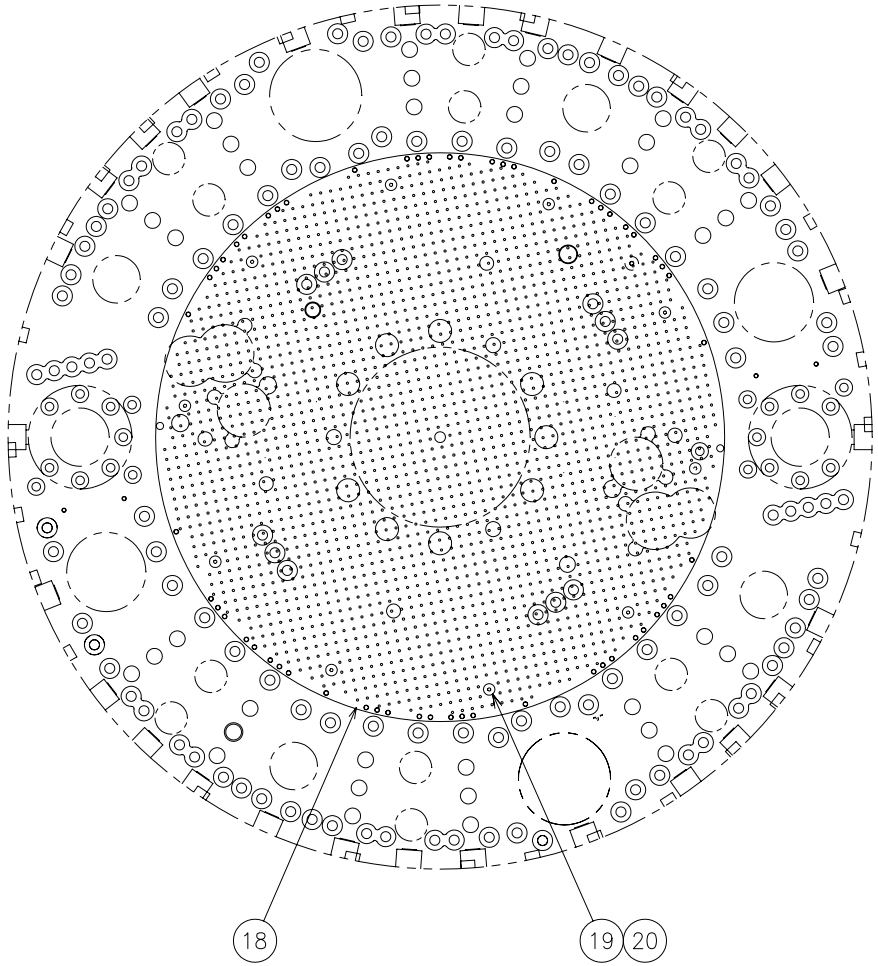

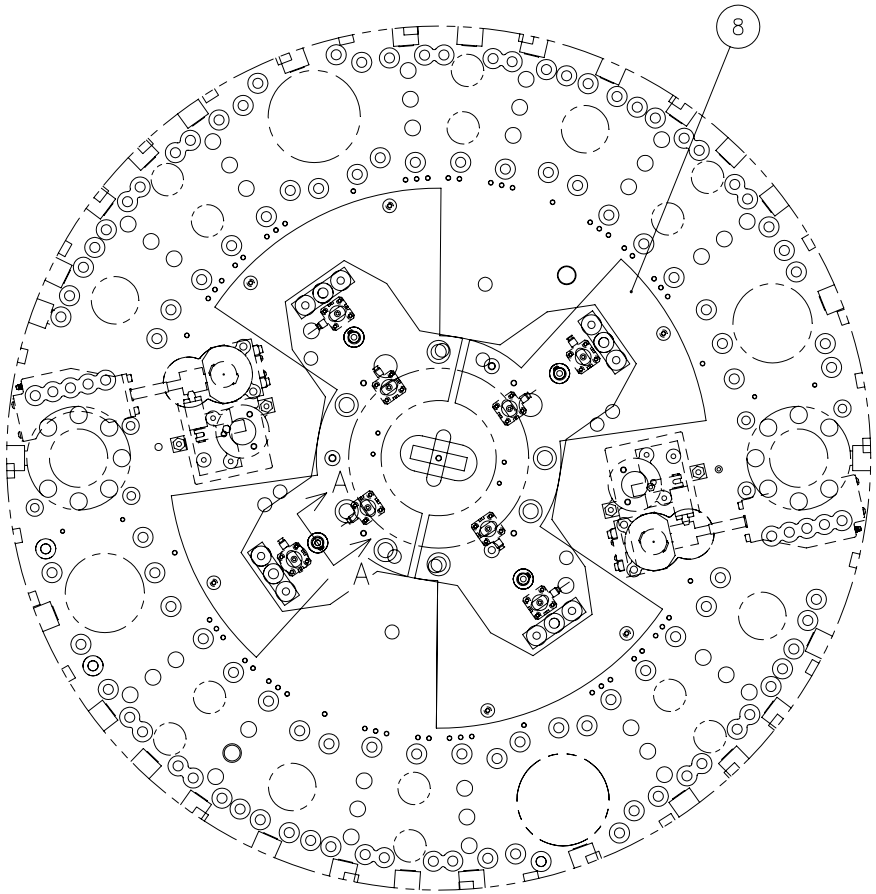

DETAIL Table Plate Base

6879570
(6875535A)

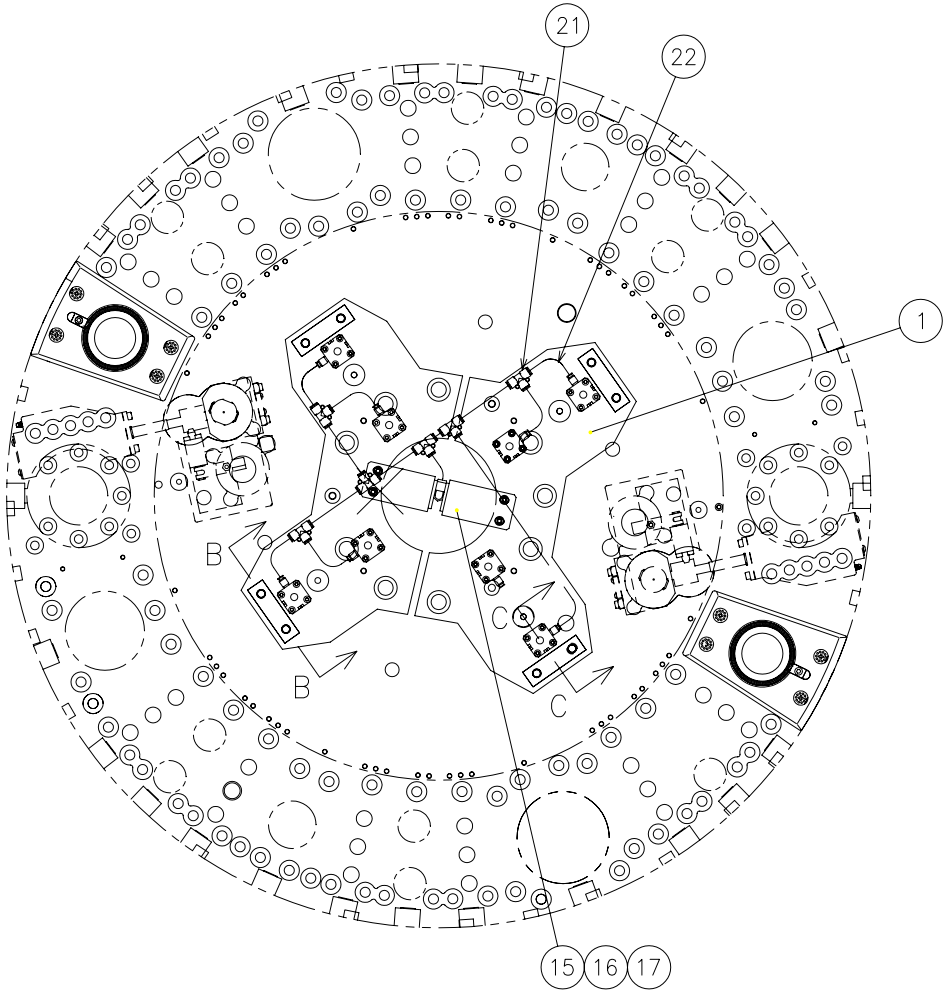

DETAIL Table Support Plate

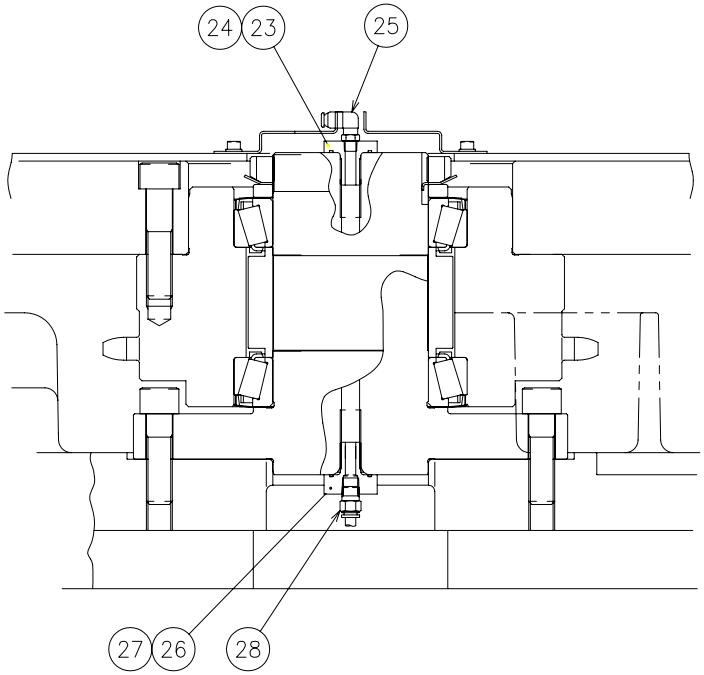

DETAIL Piping of Shaft

6879570
(6875535A)

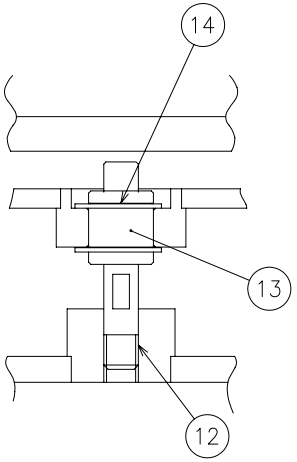

SECTION A–A

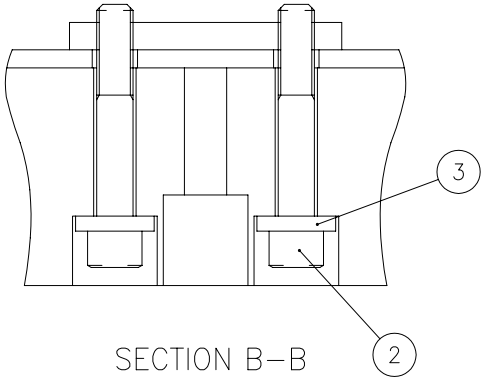

SECTION B–B

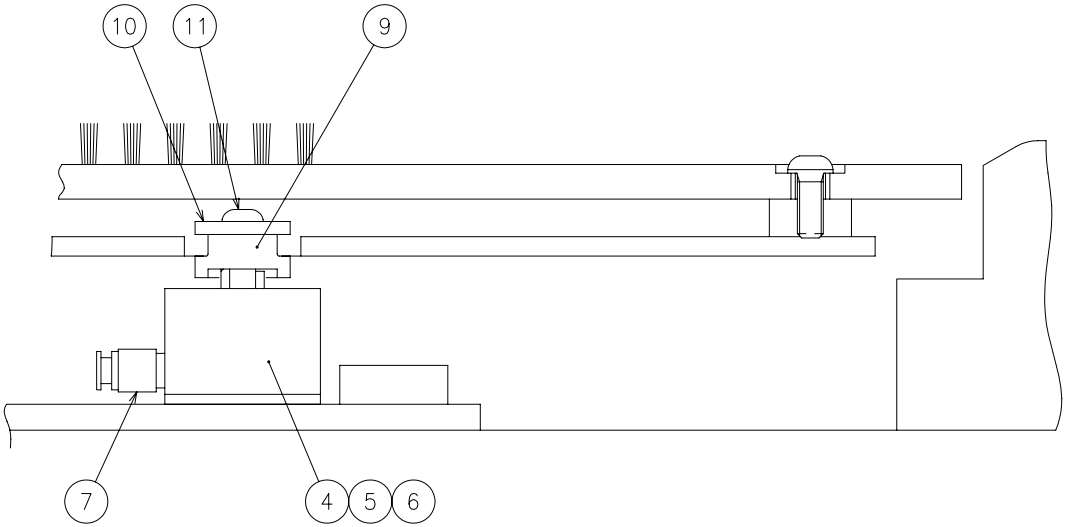

SECTION C–C

6879570
(6875535A)

Unit No. 141

Floating Brush(2) From Serial No.36102001 and after

Index	Code	Parts Name	Drawing No.	Type	Maker	Q'ty	Note
1	74419403	Table Plate Support	6879571			2	
2	10558427	Hex Soc Cap Screw	P330250014	M12X75		8	
3	74303703	Washer (M12)	0827014 B			8	
4	74565357	Pneumatic Cylinder	P550006176	SSD-X-20-5	CKD	8	
5	74811247	Spacer	6823219			8	
6	79316111	Hex Soc Cap Screw	P330210010	M5X25		32	
7	74565358	Instant Fitting	P586538091	GWS6-M5-S	CKD	8	
8	74419404	Table Plate Base (2AI)	6879572			1	2AI
8	74419405	Table Plate Base (4AI)	6879576			1	4AI
9	74811249	Collar (2)	6823213			8	
10	74565360	Washer	7407545			8	
11	74355302	Button Head Screw	P334500041	M5X15		8	
12	74565367	Linear Shaft	6911494 A			4	
13	74419165	Way Bearing	P446002046	LM8SGA	THK	4	
14	78183414	Locating Snap Ring	P406108038	STW-15	OCHIAI	8	
15	74811250	Connector Guide	6823218			2	
16	10340501	Hex Soc Cap Screw	P330220002	M6X8		4	
17	79565419	Washer	P336000005	6(Regular Round)		4	
18	74419406	MDF Brush (V)(2AI)	6879573			1	2AI

Unit No. 141

Floating Brush(2) From Serial No.36102001 and after

Index	Code	Parts Name	Drawing No.	Type	Maker	Q'ty	Note
18	74419407	MDF Brush (V)(4AI)	6879577			1	4AI
19	74300624	Button Head Screw	P334500015	M6X15		8	
20	79565419	Washer	P336000005	6(Regular Round)		8	
21	31184093	Instant Fitting	P586593007	KQ2T06-00	SMC	7	
22	74570235	Plastic Hose	P230222139	U2-4-6X4(Black)-2M	NITTA MOORE	1	
23	74565372	Bushing	7407029			1	
24	74565374	O Ring	P590032023	S29	NOK	1	
25	74313229	Rotary Joint	7931047	RL6-01	HASHIMOTO Rubber	1	
26	74565373	Bushing (Lower)	7407548			1	
27	74565374	O Ring	P590032023	S29	NOK	1	
28	74565375	Instant Fitting	P586535044	WN-10-02	JUNKOSHA	1	

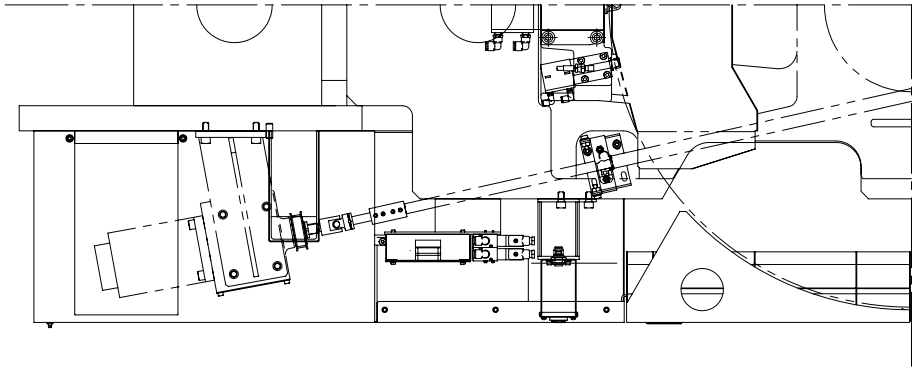

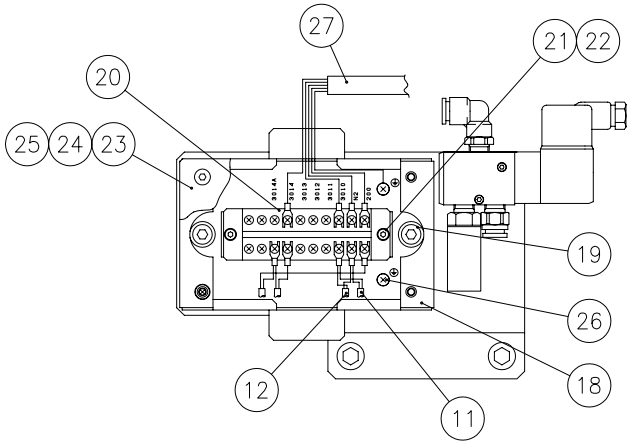

DETAIL Relay Box

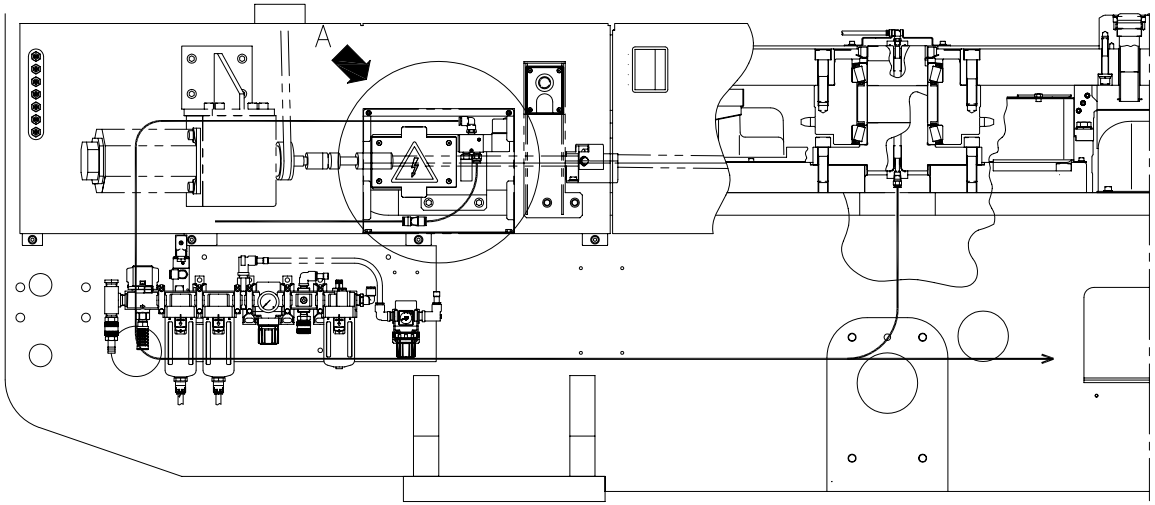

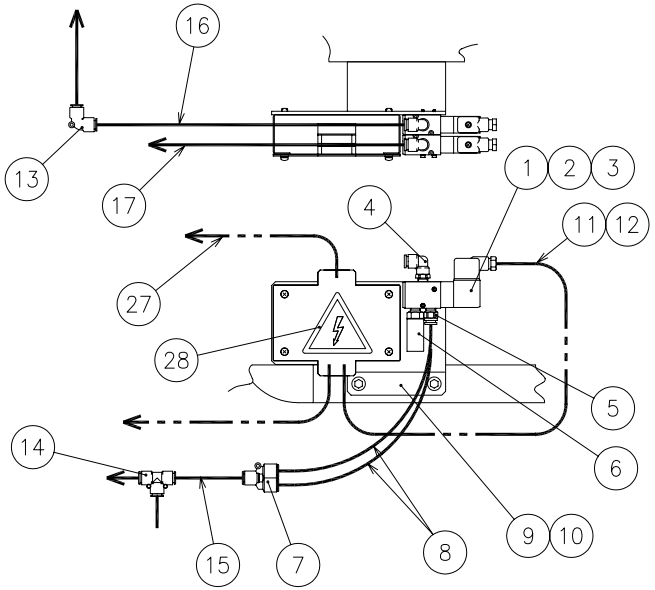

DETAIL A

6877930

Unit No. 142

Floating Brush(3) From Serial No.36102001 and after

Index	Code	Parts Name	Drawing No.	Type	Maker	Q'ty	Note
1	74565376	Air Directional Valve	P556002083	VP342-5D-02A	SMC	2	
2	74811252	Hex Soc Cap Screw	P330200064	M3X60		2	
3	36368119	Washer	P336000002	3(Small Round)		2	
4	10421366	Instant Fitting	P586564006	EL10-PT1/4	NITTA MOORE	2	
5	74722943	Instant Fitting	P586534007	EC10-PT1/4	NITTA MOORE	2	
6	74383602	Silencer	P557032005	AN200-02	SMC	2	
7	10375623	Instant Fitting	P586624003	EYB10-10	NITTA MOORE	1	
8	71371423	Plastic Hose	P230242088	N2-4-10X8(Black)-1M	NITTA MOORE	1	
9	74811253	Solenoid Plate	6875840			1	
10	79568704	Hex Soc Cap Screw	P330250004	M12X25		2	
11	74565382	Cable FB-1	7407562			1	
12	74565382	Cable FB-1	7407562			1	
13	74379550	Instant Fitting	P586564016	EUL10	NITTA MOORE	1	
14	74379378	Instant Fitting	P586604013	EUT10	NITTA MOORE	1	
15	71371423	Plastic Hose	P230242096	N2-4-10X8(Black)-2.5M	NITTA MOORE	1	
16	71371423	Plastic Hose	P230242096	N2-4-10X8(Black)-2.5M	NITTA MOORE	1	
17	71371423	Plastic Hose	P230242076	N2-4-10X8(Black)-1.5M	NITTA MOORE	1	
18	74419167	Relay Box (BF)	6877934			1	
19	75420814	Flange Socket Bolt	P330468011	M8X10	NISSAN NEJI	2	

Floating Brush(3) From Serial No.36102001 and after

Index	Code	Parts Name	Drawing No.	Type	Maker	Q'ty	Note
20	74565381	Block Terminal	P864002060	BTB15C10	IDEC	1	
21	86620301	Hex Soc Cap Screw	P330200018	M4X15		2	
22	79573511	Washer	P336000003	4(Small Round)		2	
23	74419168	Relay Box Cover (BF)	6877935			1	
24	74419169	Packing (BF)	6877936			1	
25	74570033	Pan Head Screw with Washer	P334200134	M5X10(Chromate P-4)		4	
26	74569811	Pan Head Screw with Washer	P334200113	M4X6(Chromate P-4)		3	
27	74419170	Cable BF	6877937			1	
28	74379098	Charging Mark	P360200003	JISB6015-80H		1	

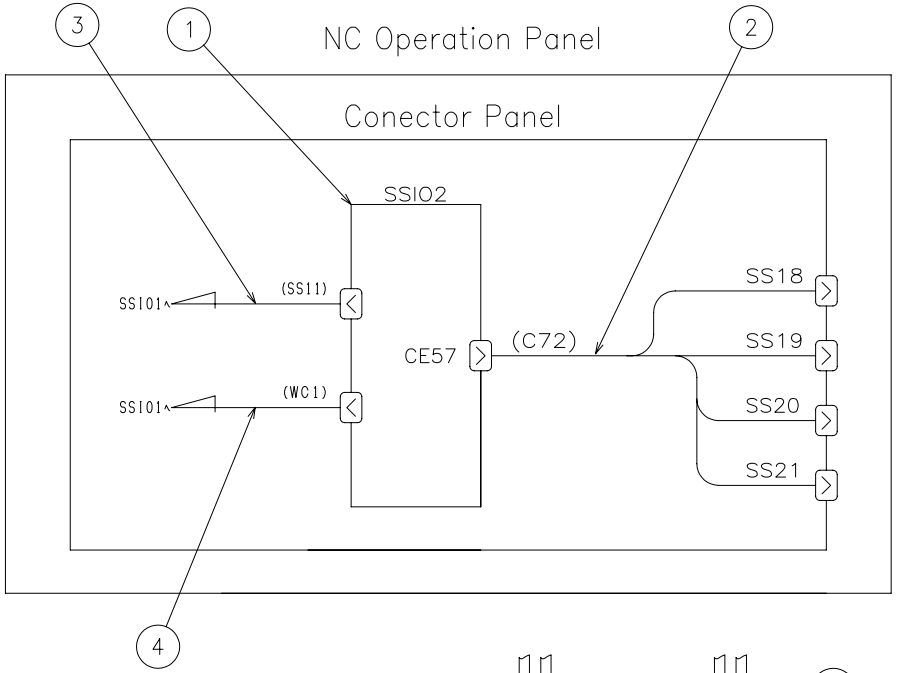

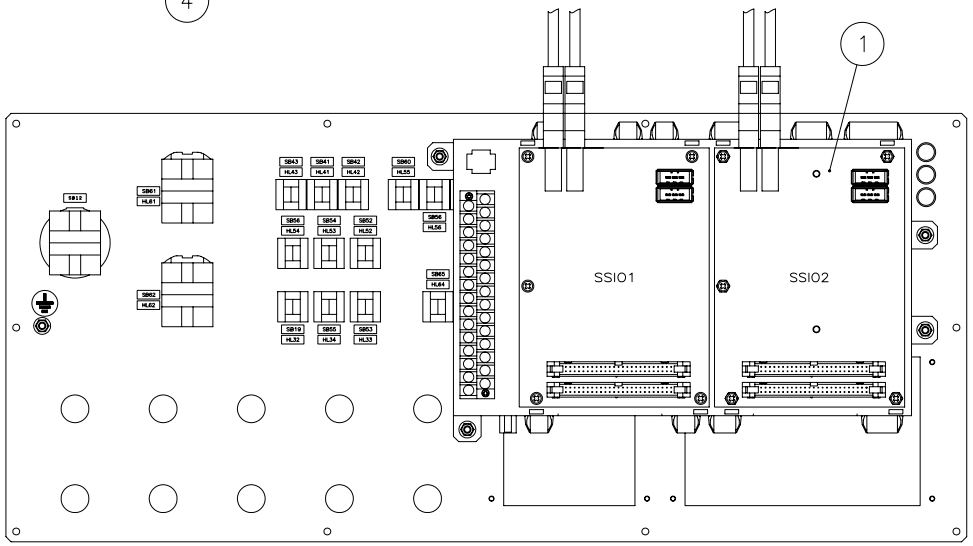

NC Operation Panel(Rear)

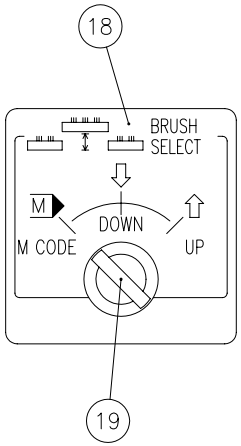

6703219A
6703245
6707930
6707951
6707952

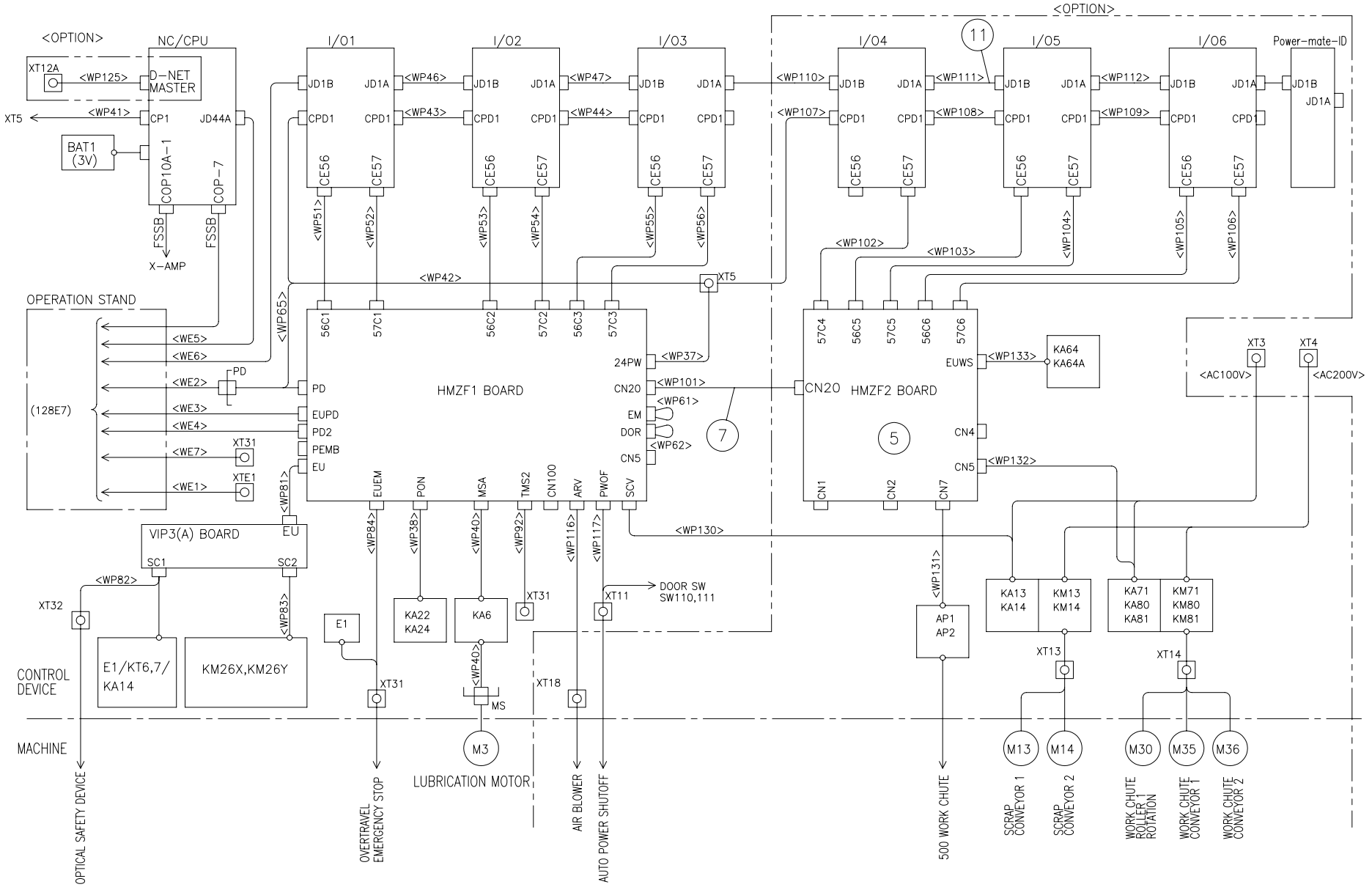
<OPTION>
NC/CPU
XT12A
<WP125>
D-NET MASTER
XT5
<WP41>
CP1
JD44A
BAT1 (3V)
COP10A-1
COP-7
FSSB
X-AMP
I/01
I/02
I/03
I/04
I/05
I/06
Power-mate-ID
JD1B
JD1A
CPD1
CE56
CE57
<WP46>
<WP47>
<WP43>
<WP44>
<WP110>
<WP111>
<WP112>
<WP107>
<WP108>
<WP109>
<WP51>
<WP52>
<WP53>
<WP54>
<WP55>
<WP56>
<WP102>
<WP103>
<WP104>
<WP105>
<WP106>
<WP42>
<WP65>
OPERATION STAND
(128E7)
<WE5>
<WE6>
<WE2>
<WE3>
<WE4>
<WE7>
<WE1>
PD
XT31
XTE1
HMZF1 BOARD
56C1
57C1
56C2
57C2
56C3
57C3
24PW
CN20
EM
DOR
CN5
<WP37>
<WP101>
<WP61>
<WP62>
EUPD
PD2
PEMB
EU
<WP81>
EUEM
PON
MSA
TMS2
CN100
ARV
PWOF
SCV
HMZF2 BOARD
57C4
56C5
57C5
56C6
57C6
EUWS
<WP133>
KA64
KA64A
CN4
CN5
<WP132>
CN1
CN2
CN7
XT3
XT4
<AC100V>
<AC200V>
VIP3(A) BOARD
SC1
SC2
<WP82>
<WP83>
XT32
E1/KT6,7/KA14
KM26X,KM26Y
CONTROL DEVICE
MACHINE
<WP84>
<WP38>
<WP40>
<WP92>
<WP116>
<WP117>
<WP130>
<WP131>
E1
KA22
KA24
KA6
MS
M3
LUBRICATION MOTOR
XT18
XT11
DOOR SW
SW110,111
AP1
AP2
KA13
KA14
KM13
KM14
KA71
KA80
KA81
KM71
KM80
KM81
XT13
XT14
M13
M14
M30
M35
M36
OPTICAL SAFETY DEVICE
OVERTRAVEL EMERGENCY STOP
AIR BLOWER
AUTO POWER SHUTOFF
500 WORK CHUTE
SCRAP CONVEYOR 1
SCRAP CONVEYOR 2
WORK CHUTE ROLLER 1 ROTATION
WORK CHUTE CONVEYOR 1
WORK CHUTE CONVEYOR 2
670779126

Floating Brush(4) From Serial No.36102001 and after

Index	Code	Parts Name	Drawing No.	Type	Maker	Q'ty	Note
1	71369424	Accessory (Program Controller)	P767485288	A20B-2002-0521	FANUC	1	SSIO2
2	74419466	Cable (C72)	670526003A			1	
3	74572012	Cable (SS11)	670246008			1	
4	74572014	Cable (WC1)	670246010			1	
5	74577622	HMZF2 Board	6702384 A	B6201C-HMZF2-000		1	
6	71369424	Accessory (Program Controller)	P767485288	A20B-2002-0521	FANUC	1	IO5OR6 (List Only)
7	74418951	WP101	670285301			1	
8	74418953	WP126	670285326			1	List Only
9	74418954	WP127	670285327			1	List Only
10	74418938	WP128	670285328			1	List Only
11	74418939	WP111	670285311			1	
12	74416177	I/O Bracket	6702651			1	List Only
13	74416178	Stay (for I/O)	6702652 B			1	List Only
14	74417687	Stay For Board	P870078003	G-1070	NICS	2	List Only
15	74418042	CN Bracket (3510)	6705912			1	List Only
16	36541317	Push Rivet	P339308008	P3555B	SHINAGAWA	4	List Only
17	74419004	WP162	670285362			1	List Only
18	74419173	Brush	6705132			1	
19	74416372	Key Select Switch	P820004089	AH165-SPK3B22	FUJI Electric	1	SA79

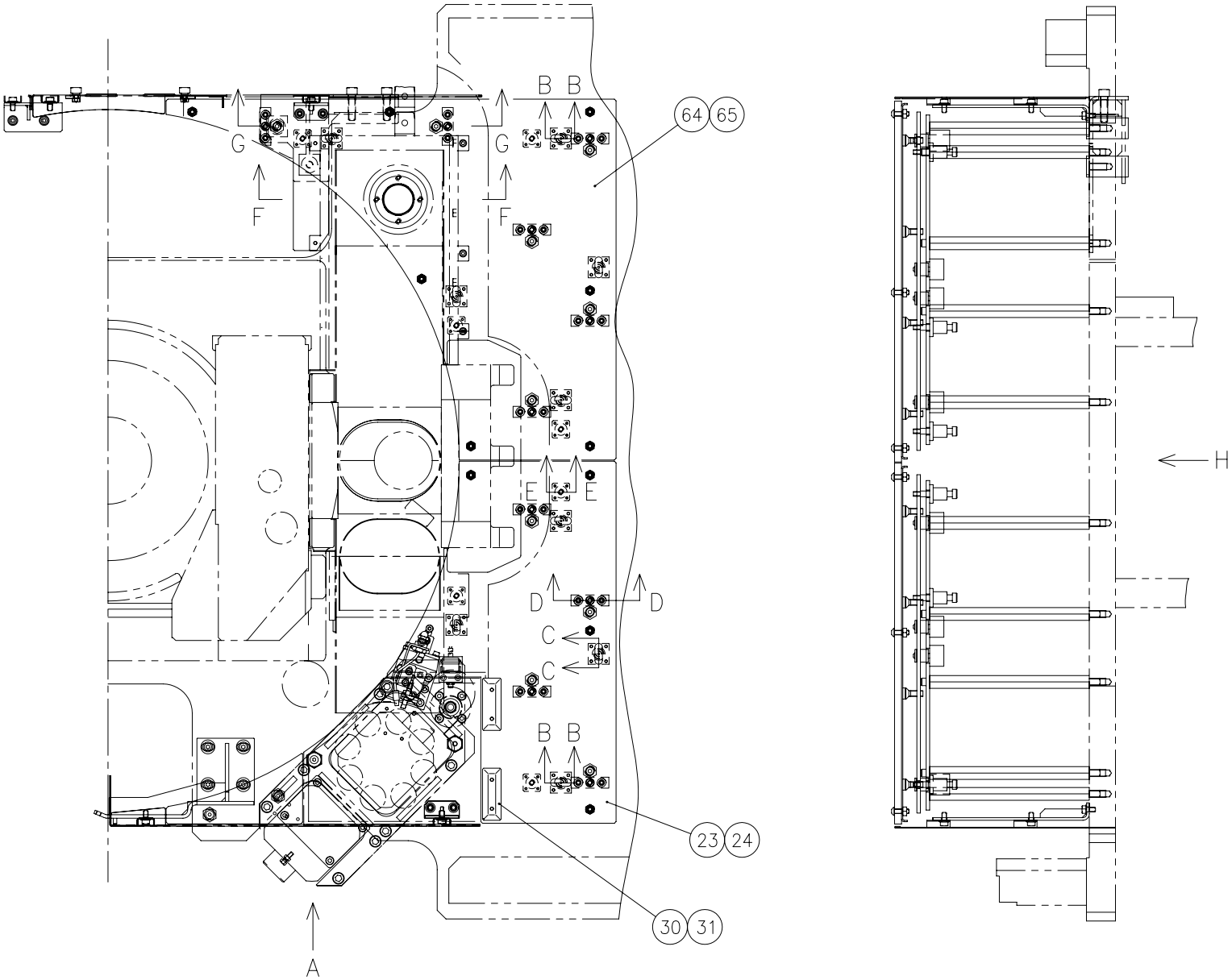
B B
64 65
G
G
F
F
E
E
D
D
C
C
B B
23 24
30 31
A
H
6875530A

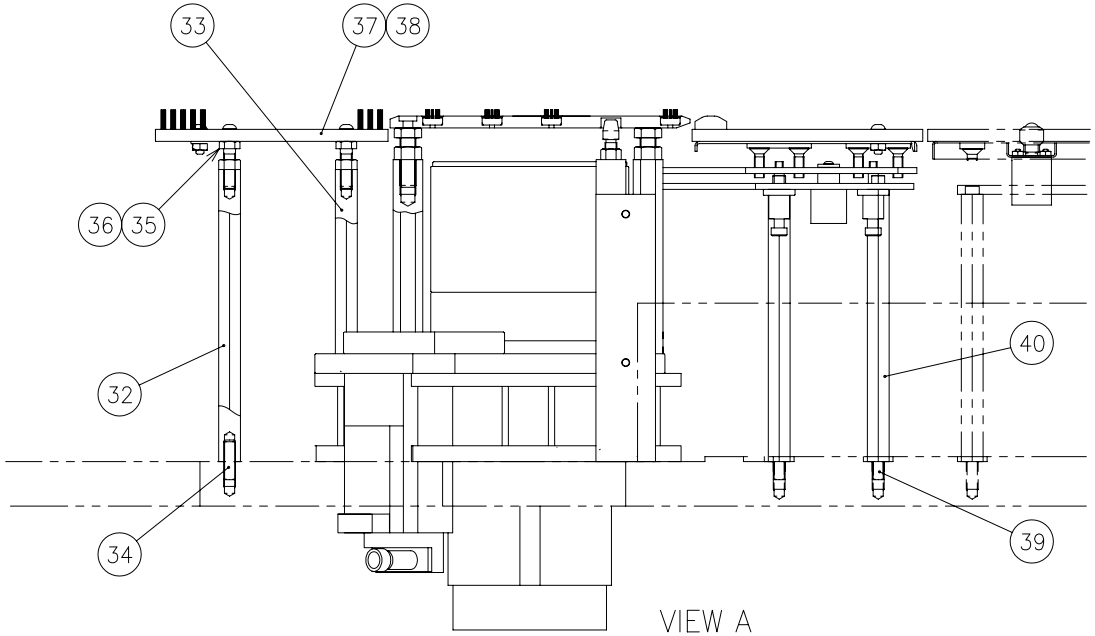
33
37
38
36
35
32
34
40
39
VIEW A

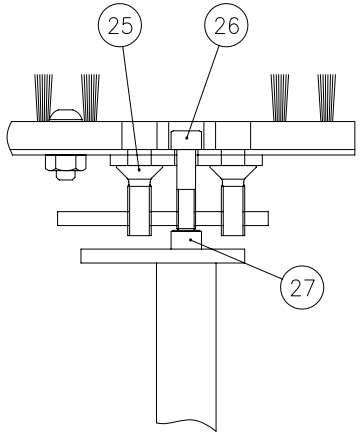
25
26
27
SECTION D–D
(4 Sets)

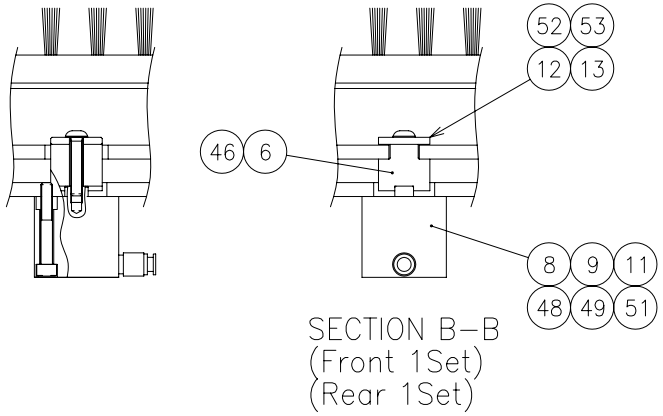
52
53
12
13
46
6
8
9
11
48
49
51
SECTION B–B
(Front 1Set)
(Rear 1Set)

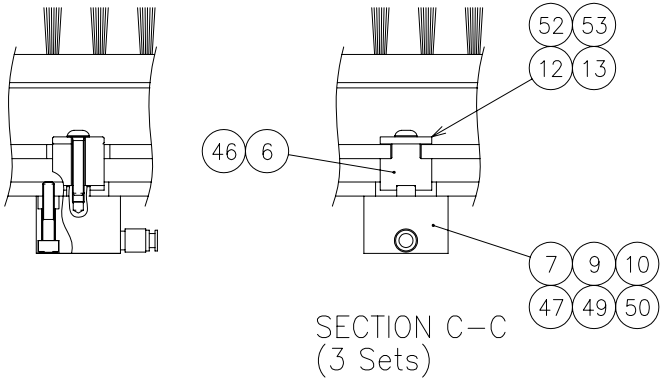
52
53
12
13
46
6
7
9
10
47
49
50
SECTION C–C
(3 Sets)

6875530A

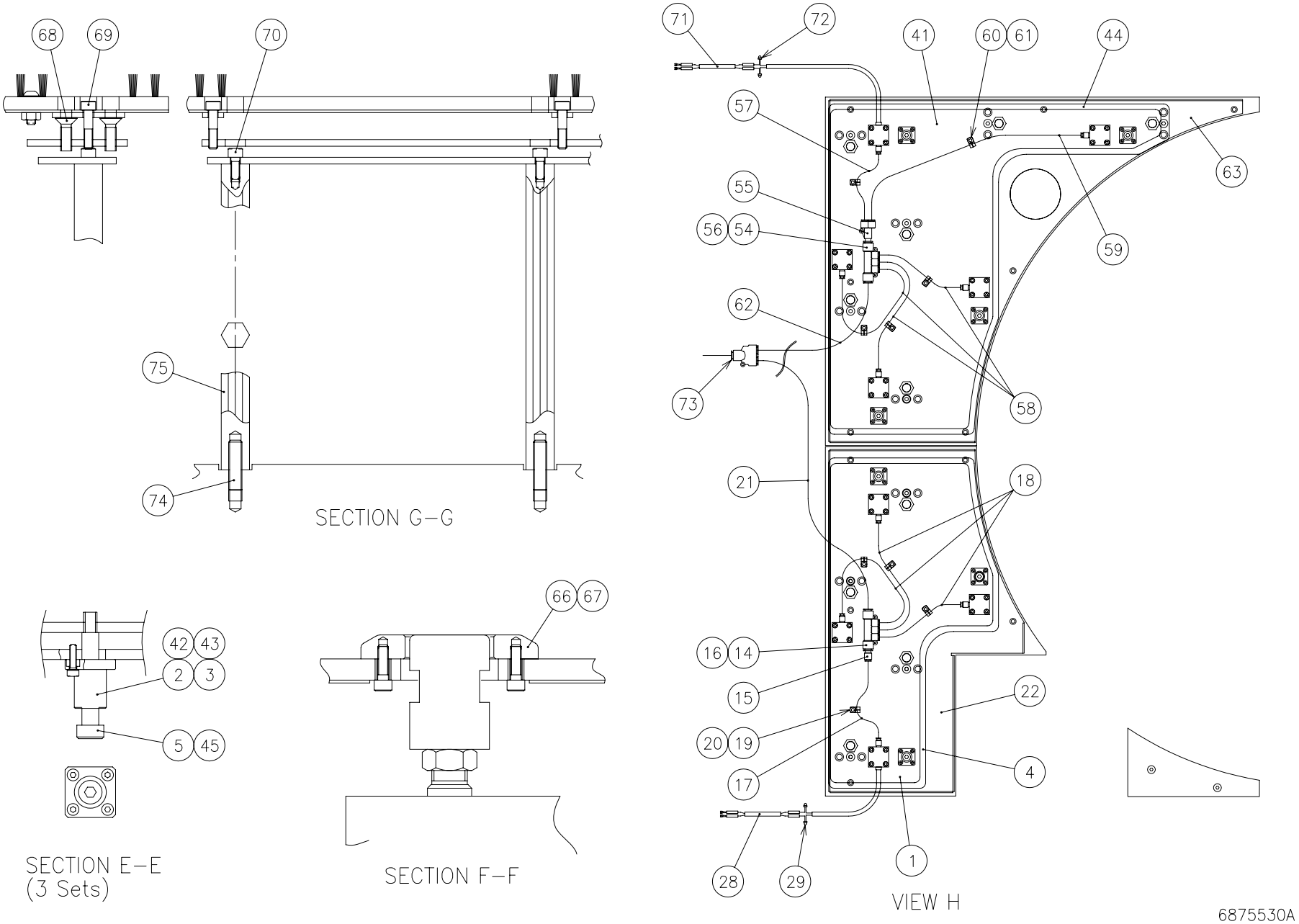
68
69
70
75
74
SECTION G-G
42
43
2
3
5
45
SECTION E-E
(3 Sets)
66
67
SECTION F-F
71
72
41
60
61
44
57
63
55
56
54
59
62
73
58
21
18
16
14
15
22
20
19
17
4
28
29
1
VIEW H
6875530A

Unit No. 144

Floating Brush (Multi Tapping)(1) From Serial No.36102001 and after

Index	Code	Parts Name	Drawing No.	Type	Maker	Q'ty	Note
1	74419153	Cylinder Base F (M/T)	6873722			1	
2	74419158	Way Bearing	P446002045	LMK10	THK	3	
3	86620301	Hex Soc Cap Screw	P330200018	M4X15		12	
4	74419154	Repositioning Brush Base(F-MT)	6873723			1	
5	74382660	Shoulder Bolt	P338134008	MSB10-60	MISUMI	3	
6	74419160	Cylinder Collar	6873548			4	
7	74565357	Pneumatic Cylinder	P550006176	SSD-X-20-5	CKD	3	
8	74565356	Pneumatic Cylinder	P550006178	SSD-XL-20-5-T0H-D	CKD	1	
9	74565358	Instant Fitting	P586538091	GWS6-M5-S	CKD	4	
10	79316111	Hex Soc Cap Screw	P330210010	M5X25		12	
11	10443103	Hex Soc Cap Screw	P330210012	M5X35		4	
12	74565360	Washer	7407545			4	
13	71371539	Button Head Screw	P334500061	M5X25		4	
14	74568611	Instant Fitting	P586703001	KM13-06-10-3	SMC	1	
15	36162361	Instant Fitting	P586653010	KQ2R06-10	SMC	1	
16	86631339	Hex Soc Cap Screw	P330200022	M4X25		2	
17	71371426	Plastic Hose	P230222084	N2-4-6X4(Black)-0.2M	NITTA MOORE	1	
18	71371426	Plastic Hose	P230222163	N2-4-6X4(Black)-0.3M	NITTA MOORE	3	
19	74563689	Saddle For Conduct	P381017105	PZ0106(D6.2)	DAIWA DENGYO	4	

Floating Brush (Multi Tapping)(1) From Serial No.36102001 and after

Index	Code	Parts Name	Drawing No.	Type	Maker	Q'ty	Note
20	31183033	Hex Soc Cap Screw	P330220003	M6X10		4	
21	71371423	Plastic Hose	P230242076	N2-4-10X8(Black)-1.5M	NITTA MOORE	1	
22	74419155	Repositioning Brush Base (F)	6873727 A			1	
23	74419156	MDF Brush (Repositioning F)M/T	6873728			1	
24	74722756	Button Head Screw	P334500021	M8X25		5	
25	74379291	Flat Head Bolt	P334520028	M10X30		8	
26	10443022	Hex Soc Cap Screw	P330230009	M8X35		4	
27	79564804	Hex Soc Cap Screw	P330230006	M8X20		4	
28	74418221	Cable FB-6	6524951			1	
29	74382938	Terminal	P869150001	CE-1		2	
30	74570351	Support Plate (MT)	6592190			2	
31	79565422	Hex Soc Cap Screw	P330220011	M6X25		4	
32	74570349	Stud (MT1)	6821394	H22		1	
33	74570350	Stud (MT3)	6821403	H22		1	
34	74388378	Socket Set Screw	P330550065	M12X40(Flat-end)		2	
35	74570348	Adjustable Bolt	6813254			2	
36	31183535	Nut	P332000007	M12		2	
37	74575096	MDF Brush (MT1)	6823641			1	
38	74722756	Button Head Screw	P334500021	M8X25		2	

Floating Brush (Multi Tapping)(1) From Serial No.36102001 and after

Index	Code	Parts Name	Drawing No.	Type	Maker	Q'ty	Note
39	74386882	Socket Set Screw	P330550118	M12X45(Flat-end)		1	
40	74417382	Stud (Table Base)	6873284			1	
41	74419157	Cylinder Base (R)	6873725			1	
42	74419158	Way Bearing	P446002045	LMK10	THK	4	
43	86620301	Hex Soc Cap Screw	P330200018	M4X15		16	
44	74419159	Repositioning Table Base (R)	6873726			1	
45	74382660	Shoulder Bolt	P338134008	MSB10-60	MISUMI	4	
46	74419160	Cylinder Collar	6873548			5	
47	74565357	Pneumatic Cylinder	P550006176	SSD-X-20-5	CKD	4	
48	74565356	Pneumatic Cylinder	P550006178	SSD-XL-20-5-T0H-D	CKD	1	
49	74565358	Instant Fitting	P586538091	GWS6-M5-S	CKD	5	
50	79316111	Hex Soc Cap Screw	P330210010	M5X25		16	
51	10443103	Hex Soc Cap Screw	P330210012	M5X35		4	
52	74565360	Washer	7407545			5	
53	71371539	Button Head Screw	P334500061	M5X25		5	
54	74568611	Instant Fitting	P586703001	KM13-06-10-3	SMC	1	
55	74419161	Instant Fitting	P586628088	GWP610-Y	CKD	1	
56	86631339	Hex Soc Cap Screw	P330200022	M4X25		2	
57	71371426	Plastic Hose	P230222084	N2-4-6X4(Black)-0.2M	NITTA MOORE	1	

Floating Brush (Multi Tapping)(1) From Serial No.36102001 and after

Index	Code	Parts Name	Drawing No.	Type	Maker	Q'ty	Note
58	71371426	Plastic Hose	P230222163	N2-4-6X4(Black)-0.3M	NITTA MOORE	3	
59	71371426	Plastic Hose	P230222170	N2-4-6X4(Black)-0.5M	NITTA MOORE	1	
60	74563689	Saddle For Conduct	P381017105	PZ0106(D6.2)	DAIWA DENGYO	5	
61	31183033	Hex Soc Cap Screw	P330220003	M6X10		5	
62	71371423	Plastic Hose	P230242076	N2-4-10X8(Black)-1.5M	NITTA MOORE	1	
63	74419163	Repositioning Brush Base (R)	6872232 A			1	
64	74419164	MDF Brush (Repositioning R)	6879269			1	
65	74722756	Button Head Screw	P334500021	M8X25		7	
66	74379286	Support Ring	6573538			1	
67	79567722	Hex Soc Cap Screw	P330220009	M6X20		4	
68	74379291	Flat Head Bolt	P334520028	M10X30		12	
69	10443022	Hex Soc Cap Screw	P330230009	M8X35		6	
70	79564804	Hex Soc Cap Screw	P330230006	M8X20		6	
71	74418222	Cable FB-7	6524952			1	
72	74382938	Terminal	P869150001	CE-1		2	
73	10375623	Instant Fitting	P586624003	EYB10-10	NITTA MOORE	1	
74	74386882	Socket Set Screw	P330550118	M12X45(Flat-end)		1	
75	74417382	Stud (Table Base)	6873284			1	

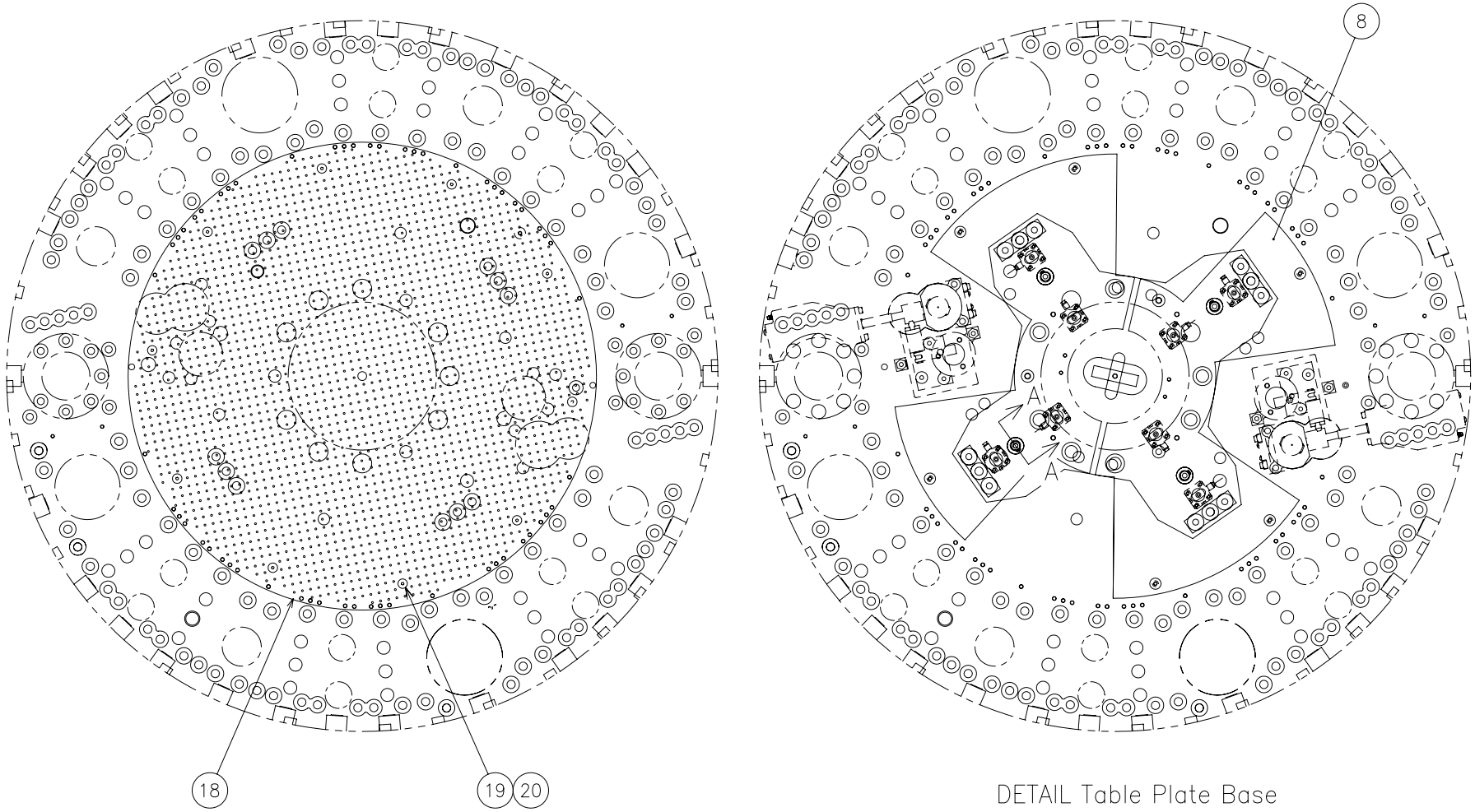

6879570
(6875535A)

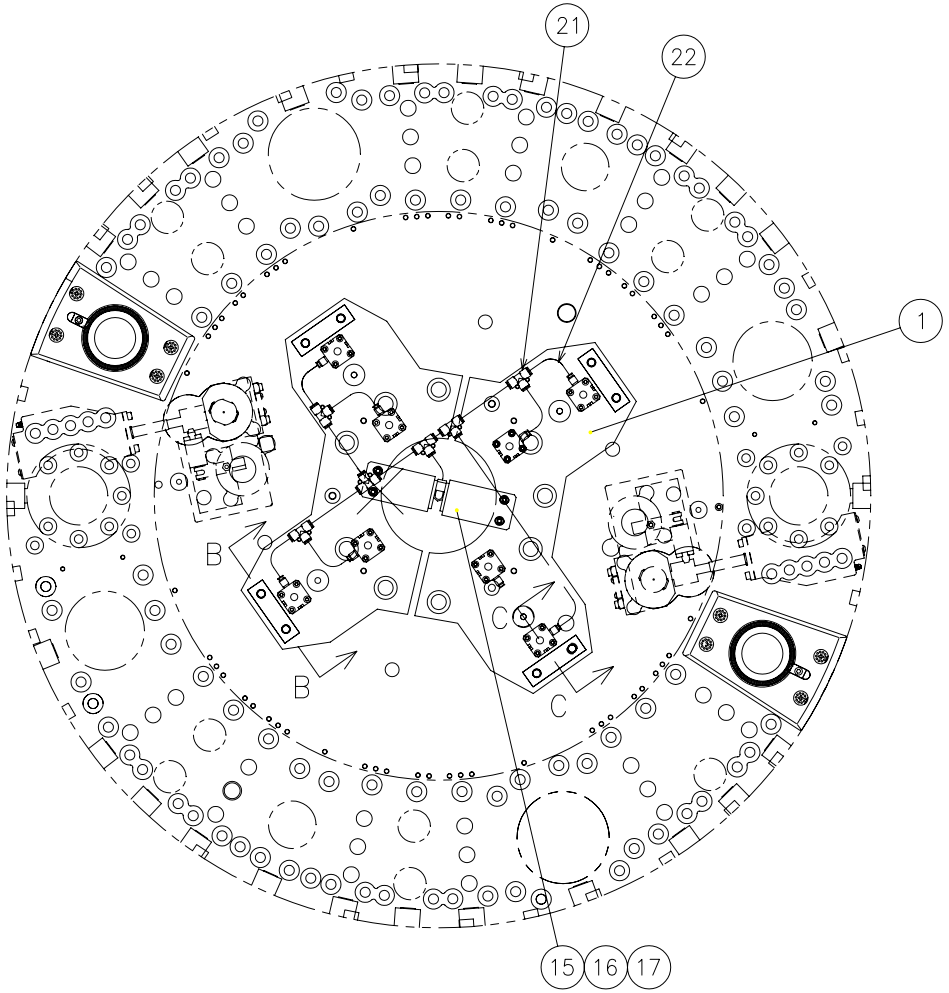

DETAIL Table Support Plate

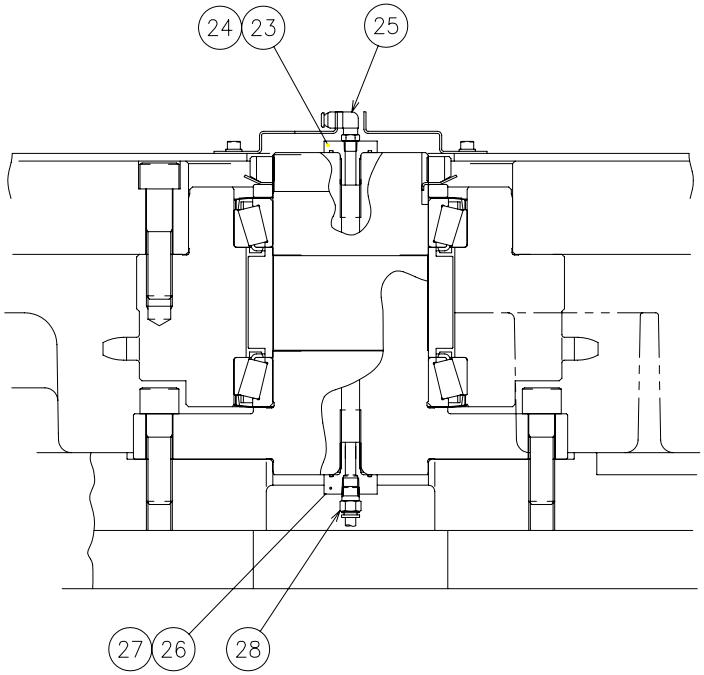

DETAIL Piping of Shaft

6879570
(6875535A)

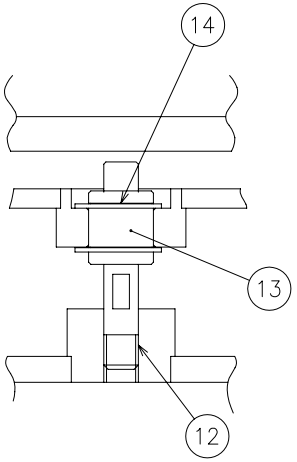

SECTION A–A

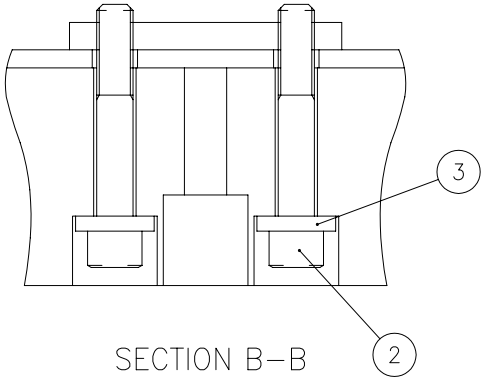

SECTION B–B

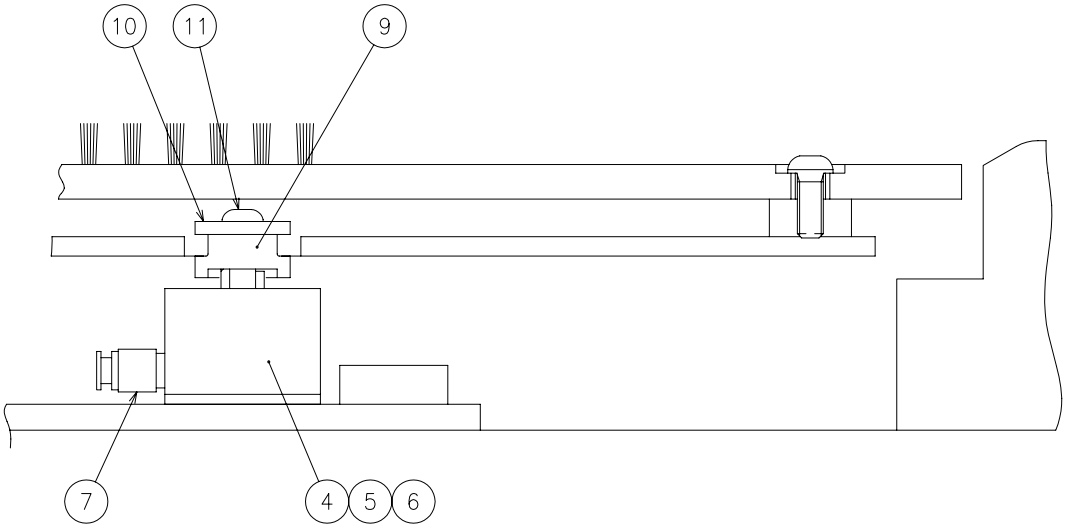

SECTION C–C

6879570
(6875535A)

Floating Brush (Multi Tapping)(2) From Serial No.36102001 and after

Index	Code	Parts Name	Drawing No.	Type	Maker	Q'ty	Note
1	74419403	Table Plate Support	6879571			2	
2	10558427	Hex Soc Cap Screw	P330250014	M12X75		8	
3	74303703	Washer (M12)	0827014 B			8	
4	74565357	Pneumatic Cylinder	P550006176	SSD-X-20-5	CKD	8	
5	74811247	Spacer	6823219			8	
6	79316111	Hex Soc Cap Screw	P330210010	M5X25		32	
7	74565358	Instant Fitting	P586538091	GWS6-M5-S	CKD	8	
8	74419404	Table Plate Base (2AI)	6879572			1	2AI
8	74419405	Table Plate Base (4AI)	6879576			1	4AI
9	74811249	Collar (2)	6823213			8	
10	74565360	Washer	7407545			8	
11	74355302	Button Head Screw	P334500041	M5X15		8	
12	74565367	Linear Shaft	6911494 A			4	
13	74419165	Way Bearing	P446002046	LM8SGA	THK	4	
14	78183414	Locating Snap Ring	P406108038	STW-15	OCHIAI	8	
15	74811250	Connector Guide	6823218			2	
16	10340501	Hex Soc Cap Screw	P330220002	M6X8		4	
17	79565419	Washer	P336000005	6(Regular Round)		4	
18	74419406	MDF Brush (V)(2AI)	6879573			1	2AI

Floating Brush (Multi Tapping)(2) From Serial No.36102001 and after

Index	Code	Parts Name	Drawing No.	Type	Maker	Q'ty	Note
18	74419407	MDF Brush (V)(4AI)	6879577			1	4AI
19	74300624	Button Head Screw	P334500015	M6X15		8	
20	79565419	Washer	P336000005	6(Regular Round)		8	
21	31184093	Instant Fitting	P586593007	KQ2T06-00	SMC	7	
22	74570235	Plastic Hose	P230222139	U2-4-6X4(Black)-2M	NITTA MOORE	1	
23	74565372	Bushing	7407029			1	
24	74565374	O Ring	P590032023	S29	NOK	1	
25	74313229	Rotary Joint	7931047	RL6-01	HASHIMOTO Rubber	1	
26	74565373	Bushing (Lower)	7407548			1	
27	74565374	O Ring	P590032023	S29	NOK	1	
28	74565375	Instant Fitting	P586535044	WN-10-02	JUNKOSHA	1	

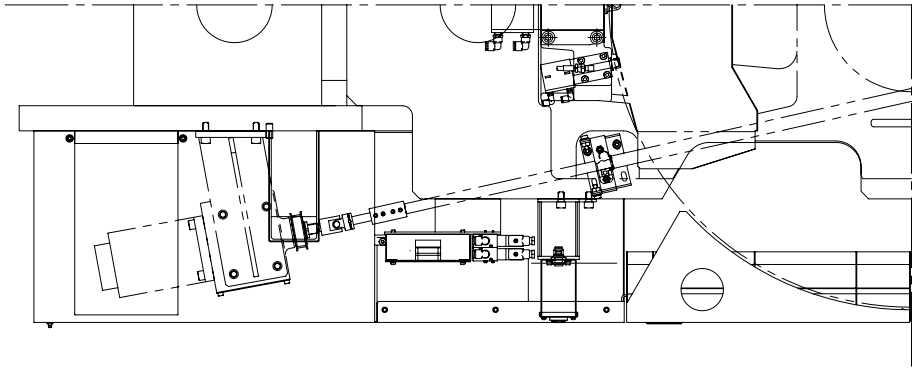

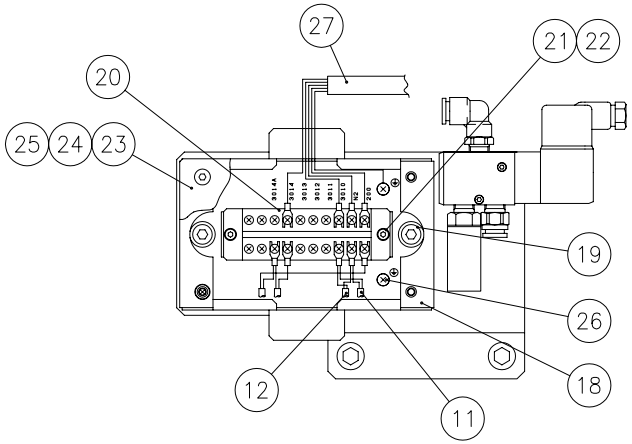

DETAIL Relay Box

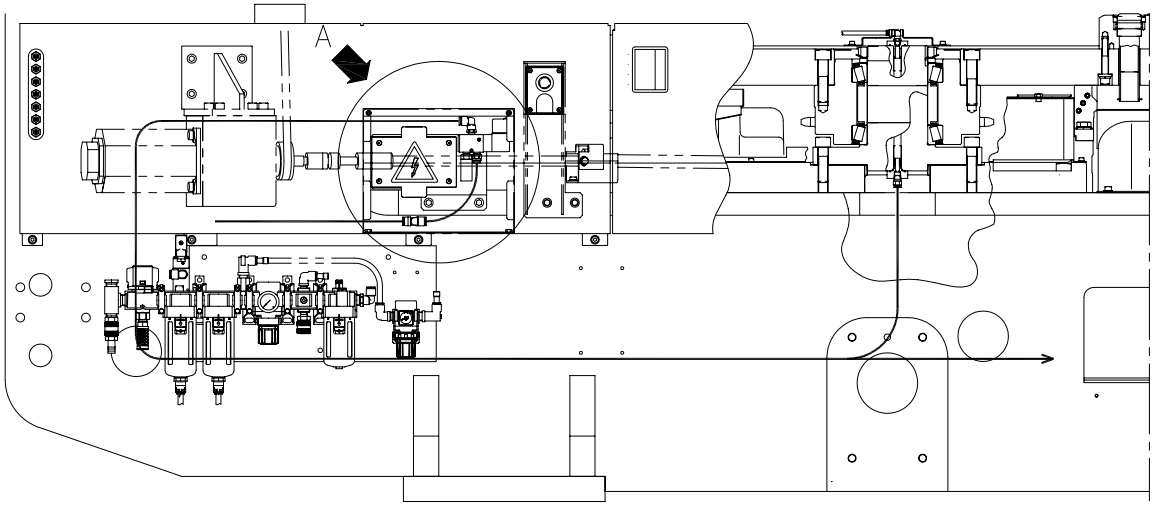

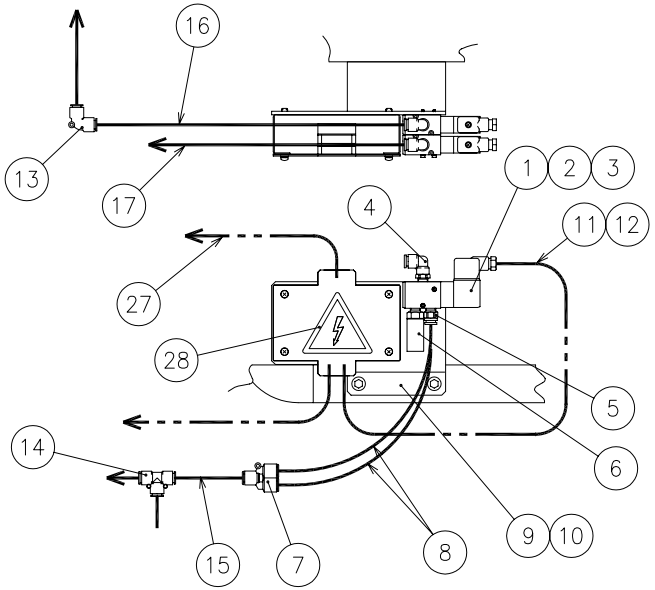

DETAIL A

6877930

Unit No. 146

Floating Brush (Multi Tapping)(3) From Serial No.36102001 and after

Index	Code	Parts Name	Drawing No.	Type	Maker	Q'ty	Note
1	74565376	Air Directional Valve	P556002083	VP342-5D-02A	SMC	2	
2	74811252	Hex Soc Cap Screw	P330200064	M3X60		2	
3	36368119	Washer	P336000002	3(Small Round)		2	
4	10421366	Instant Fitting	P586564006	EL10-PT1/4	NITTA MOORE	2	
5	74722943	Instant Fitting	P586534007	EC10-PT1/4	NITTA MOORE	2	
6	74383602	Silencer	P557032005	AN200-02	SMC	2	
7	10375623	Instant Fitting	P586624003	EYB10-10	NITTA MOORE	1	
8	71371423	Plastic Hose	P230242088	N2-4-10X8(Black)-1M	NITTA MOORE	1	
9	74811253	Solenoid Plate	6875840			1	
10	79568704	Hex Soc Cap Screw	P330250004	M12X25		2	
11	74565382	Cable FB-1	7407562			1	
12	74565382	Cable FB-1	7407562			1	
13	74379550	Instant Fitting	P586564016	EUL10	NITTA MOORE	1	
14	74379378	Instant Fitting	P586604013	EUT10	NITTA MOORE	1	
15	71371423	Plastic Hose	P230242096	N2-4-10X8(Black)-2.5M	NITTA MOORE	1	
16	71371423	Plastic Hose	P230242096	N2-4-10X8(Black)-2.5M	NITTA MOORE	1	
17	71371423	Plastic Hose	P230242076	N2-4-10X8(Black)-1.5M	NITTA MOORE	1	
18	74419167	Relay Box (BF)	6877934			1	
19	75420814	Flange Socket Bolt	P330468011	M8X10	NISSAN NEJI	2	

Floating Brush (Multi Tapping)(3) From Serial No.36102001 and after

Index	Code	Parts Name	Drawing No.	Type	Maker	Q'ty	Note
20	74565381	Block Terminal	P864002060	BTB15C10	IDEC	1	
21	86620301	Hex Soc Cap Screw	P330200018	M4X15		2	
22	79573511	Washer	P336000003	4(Small Round)		2	
23	74419168	Relay Box Cover (BF)	6877935			1	
24	74419169	Packing (BF)	6877936			1	
25	74570033	Pan Head Screw with Washer	P334200134	M5X10(Chromate P-4)		4	
26	74569811	Pan Head Screw with Washer	P334200113	M4X6(Chromate P-4)		3	
27	74419170	Cable BF	6877937			1	
28	74379098	Charging Mark	P360200003	JISB6015-80H		1	

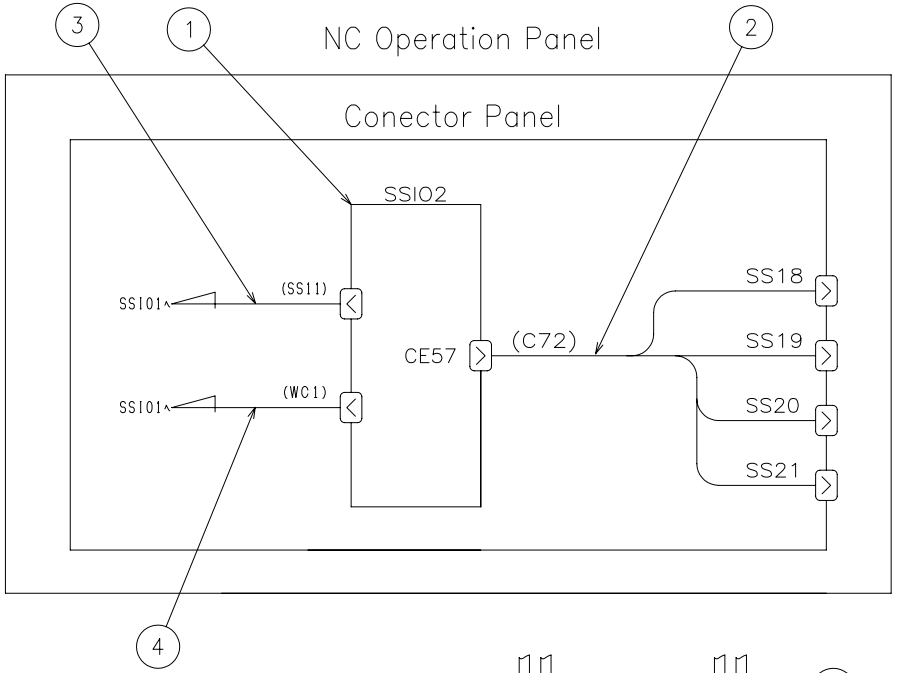

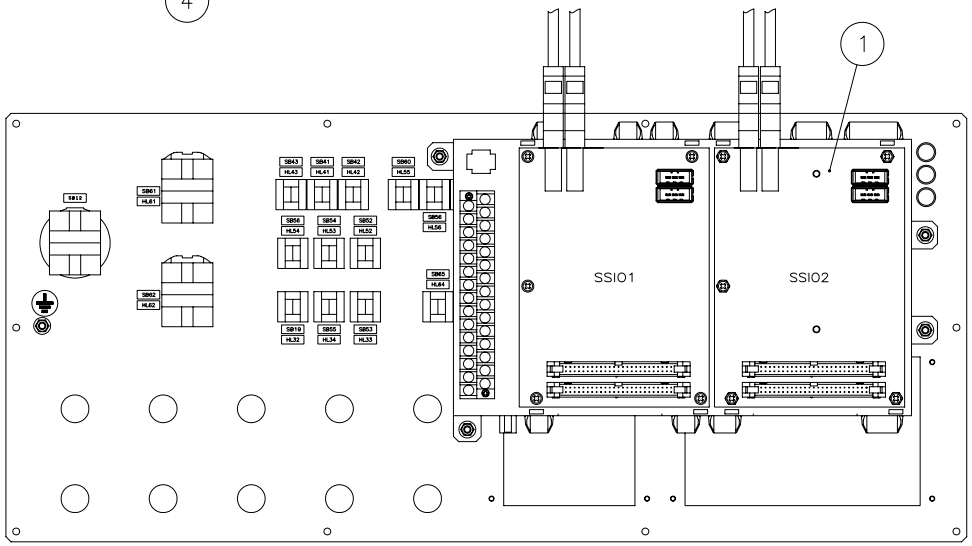

NC Operation Panel(Rear)

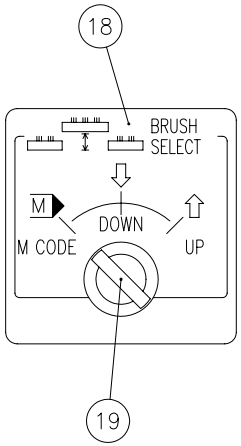

6703219A
6703245
6707930
6707951
6707952

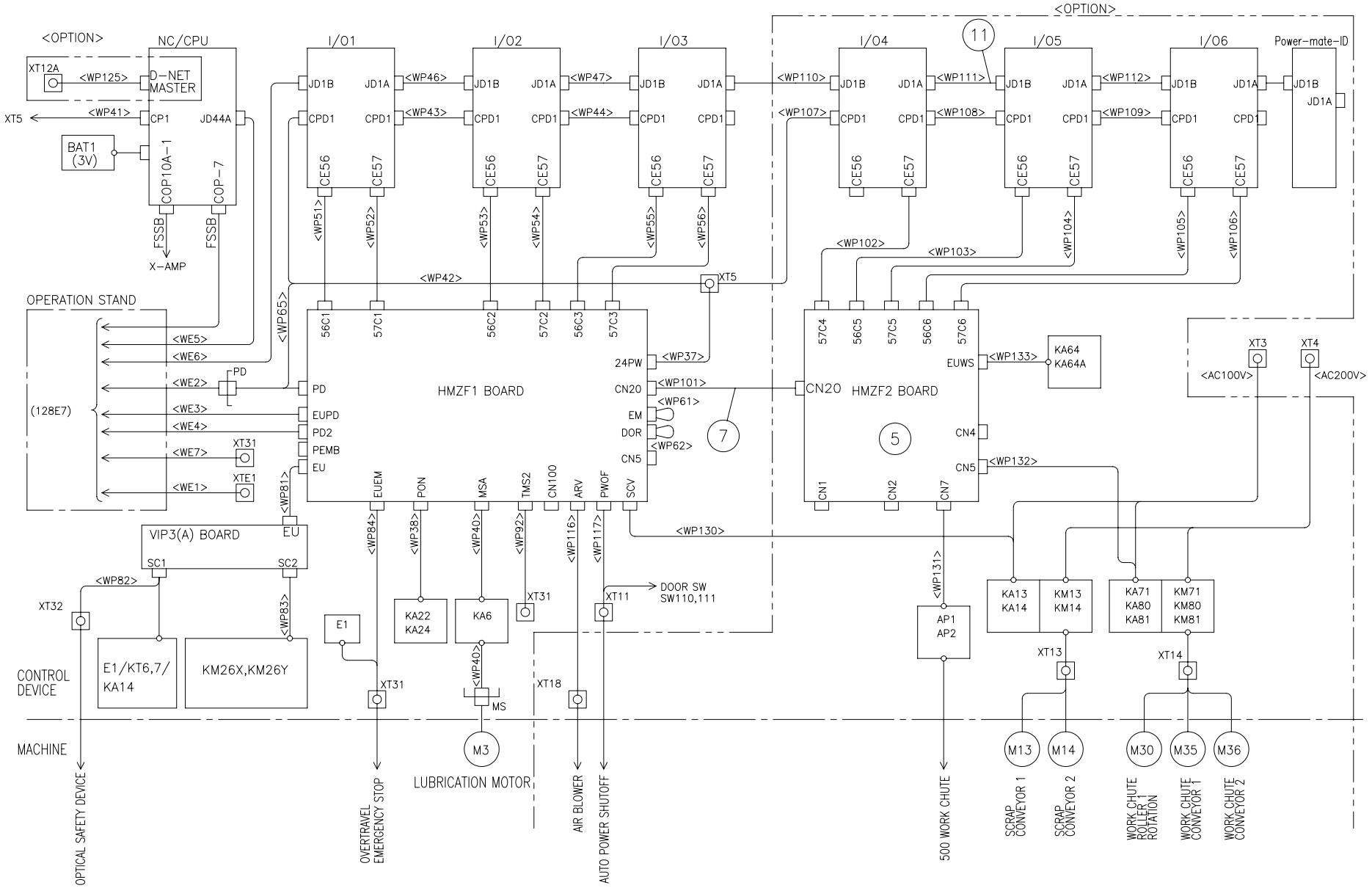
<OPTION>
NC/CPU
XT12A
<WP125>
D-NET MASTER
XT5
<WP41>
CP1
JD44A
BAT1 (3V)
COP10A-1
COP-7
FSSB
X-AMP
I/01
I/02
I/03
I/04
I/05
I/06
Power-mate-ID
JD1B
JD1A
CPD1
CE56
CE57
<WP46>
<WP47>
<WP43>
<WP44>
<WP110>
<WP111>
<WP112>
<WP107>
<WP108>
<WP109>
<WP51>
<WP52>
<WP53>
<WP54>
<WP55>
<WP56>
<WP102>
<WP103>
<WP104>
<WP105>
<WP106>
<WP42>
XT5
OPERATION STAND
(128E7)
<WE5>
<WE6>
<WE2>
<WE3>
<WE4>
<WE7>
<WE1>
PD
XT31
XTE1
<WP65>
<WP81>
HMZF1 BOARD
56C1
57C1
56C2
57C2
56C3
57C3
24PW
CN20
EM
DOR
CN5
<WP37>
<WP101>
<WP61>
<WP62>
PD
EUPD
PD2
PEMB
EU
EUEM
PON
MSA
TMS2
CN100
ARV
PWOF
SCV
HMZF2 BOARD
57C4
56C5
57C5
56C6
57C6
EUWS
<WP133>
KA64
KA64A
CN4
CN5
<WP132>
CN1
CN2
CN7
XT3
XT4
<AC100V>
<AC200V>
VIP3(A) BOARD
EU
SC1
SC2
<WP82>
<WP83>
XT32
E1/KT6,7/KA14
KM26X,KM26Y
CONTROL DEVICE
E1
<WP84>
<WP38>
<WP40>
<WP92>
<WP116>
<WP117>
<WP130>
KA22
KA24
KA6
XT31
XT11
DOOR SW
SW110,111
XT18
MS
M3
LUBRICATION MOTOR
<WP131>
AP1
AP2
KA13
KA14
KM13
KM14
KA71
KA80
KA81
KM71
KM80
KM81
XT13
XT14
M13
M14
M30
M35
M36
MACHINE
OPTICAL SAFETY DEVICE
OVERTRAVEL EMERGENCY STOP
AIR BLOWER
AUTO POWER SHUTOFF
500 WORK CHUTE
SCRAP CONVEYOR 1
SCRAP CONVEYOR 2
WORK CHUTE ROLLER 1 ROTATION
WORK CHUTE CONVEYOR 1
WORK CHUTE CONVEYOR 2
11
7
5
670779126

Floating Brush (Multi Tapping)(4) From Serial No.36102001 and after

Index	Code	Parts Name	Drawing No.	Type	Maker	Q'ty	Note
1	71369424	Accessory (Program Controller)	P767485288	A20B-2002-0521	FANUC	1	SSIO2
2	74419466	Cable (C72)	670526003A			1	
3	74572012	Cable (SS11)	670246008			1	
4	74572014	Cable (WC1)	670246010			1	
5	74577622	HMZF2 Board	6702384 A	B6201C-HMZF2-000		1	
6	71369424	Accessory (Program Controller)	P767485288	A20B-2002-0521	FANUC	1	IO5OR6 (List Only)
7	74418951	WP101	670285301			1	
8	74418953	WP126	670285326			1	List Only
9	74418954	WP127	670285327			1	List Only
10	74418938	WP128	670285328			1	List Only
11	74418939	WP111	670285311			1	
12	74416177	I/O Bracket	6702651			1	List Only
13	74416178	Stay (for I/O)	6702652 B			1	List Only
14	74417687	Stay For Board	P870078003	G-1070	NICS	2	List Only
15	74418042	CN Bracket (3510)	6705912			1	List Only
16	36541317	Push Rivet	P339308008	P3555B	SHINAGAWA	4	List Only
17	74419004	WP162	670285362			1	List Only
18	74419173	Brush	6705132			1	
19	74416372	Key Select Switch	P820004089	AH165-SPK3B22	FUJI Electric	1	SA79

From Serial No.36102001 and after

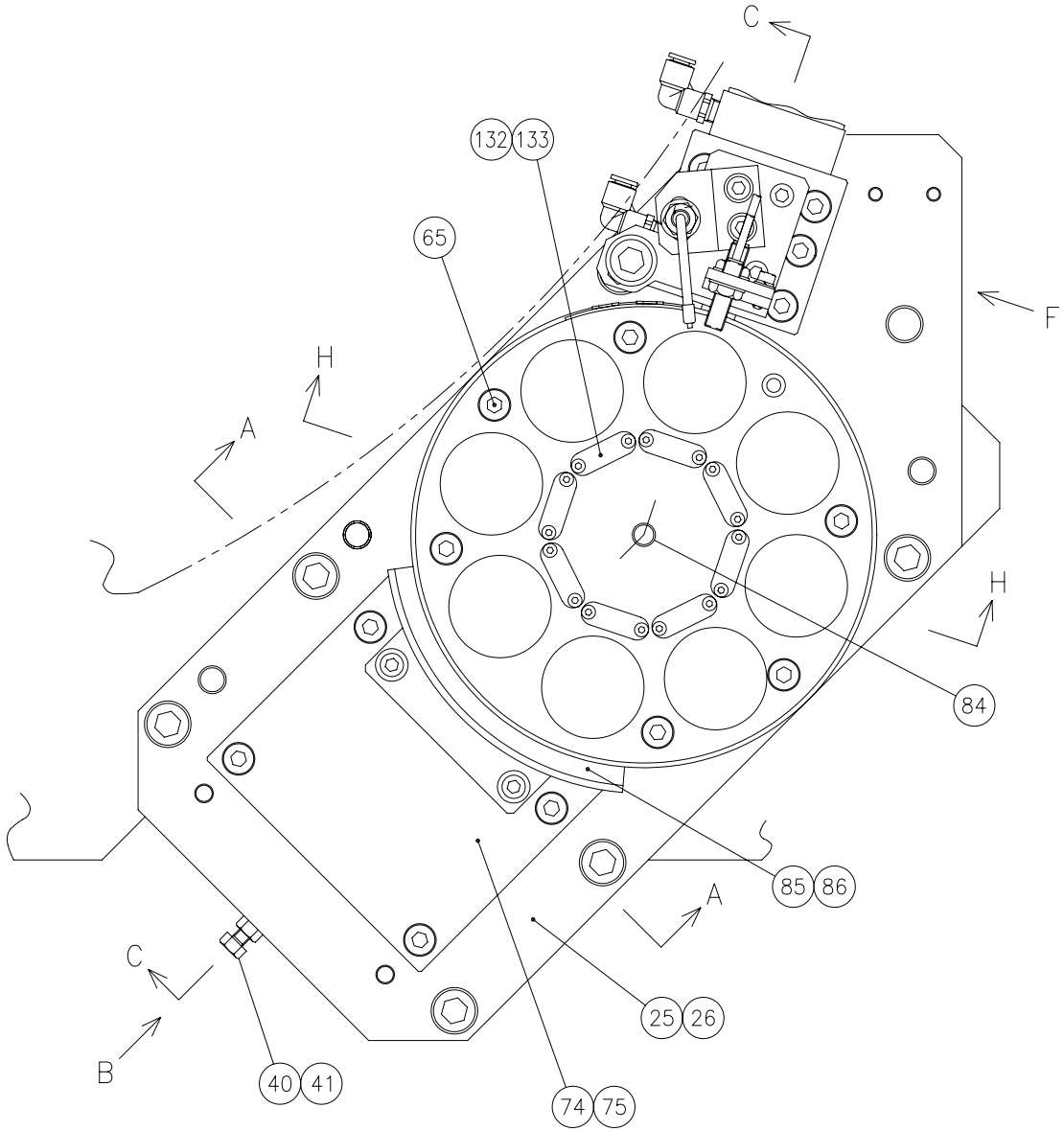

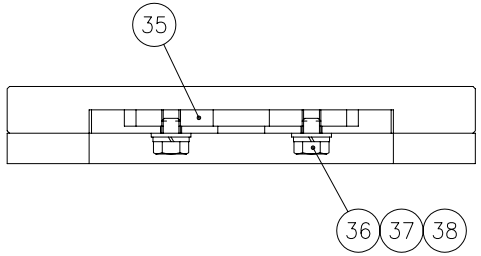

SECTION A–A

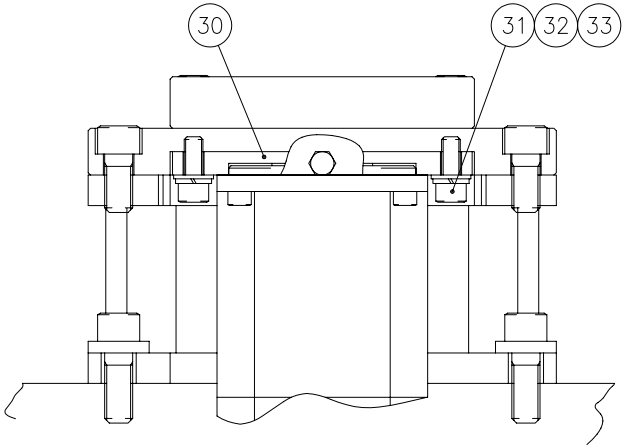

VIEW B

6875550#1
6875550#2

From Serial No.36102001 and after

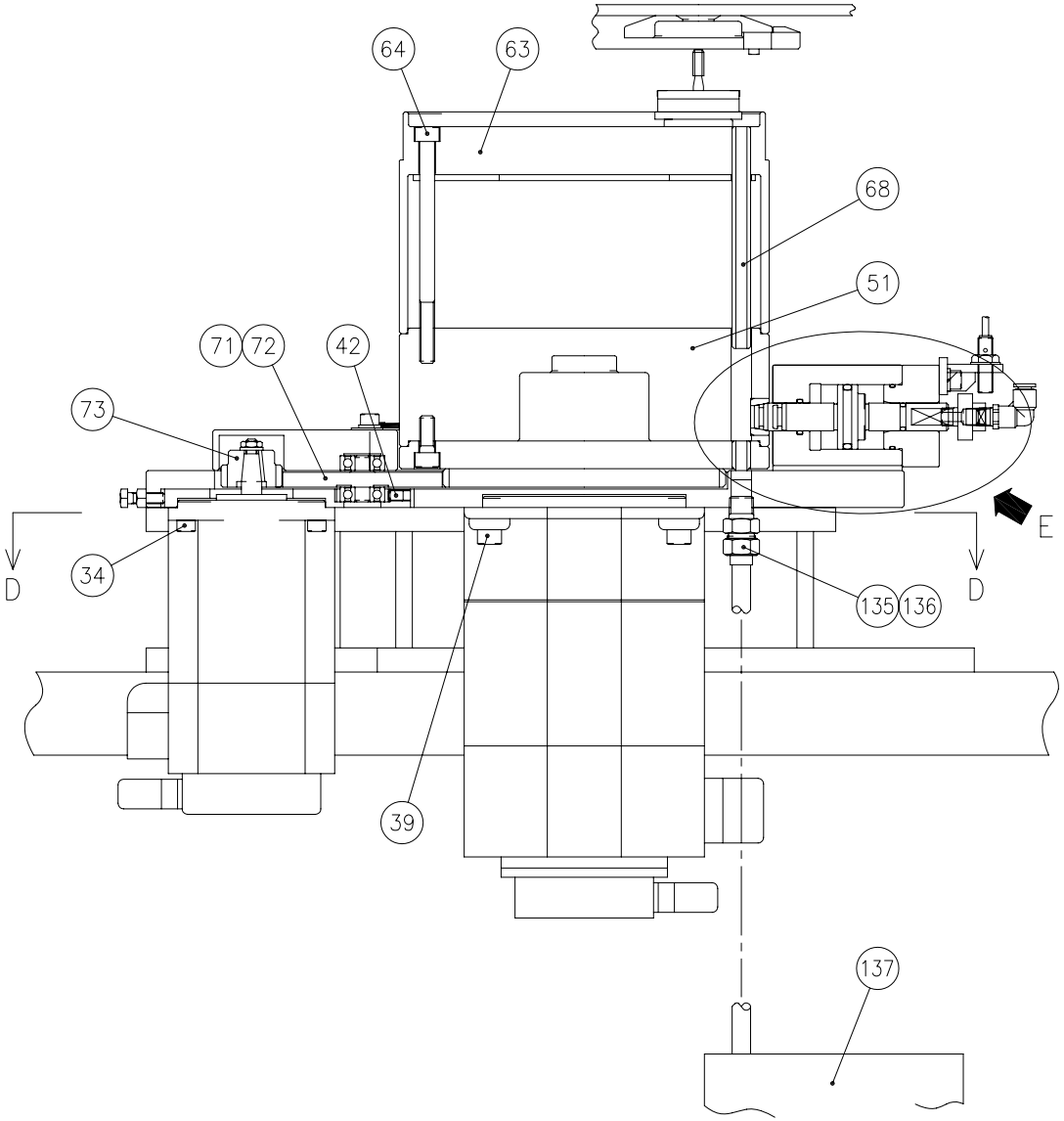

SECTION C–C

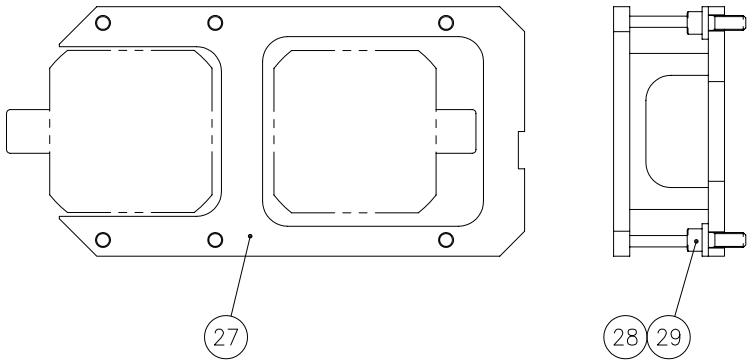

SECTION D–D

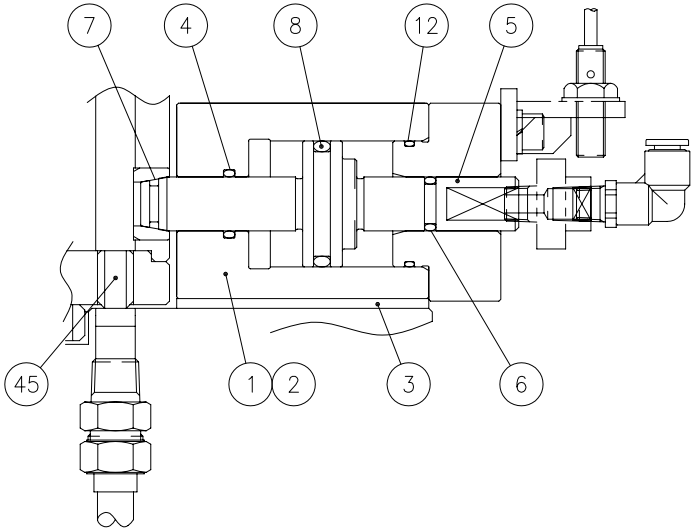

DETAIL E

6875550#1
6875550#2

From Serial No.36102001 and after

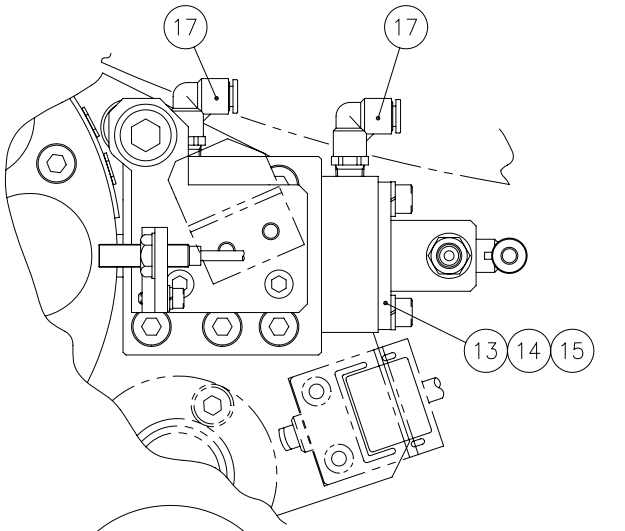

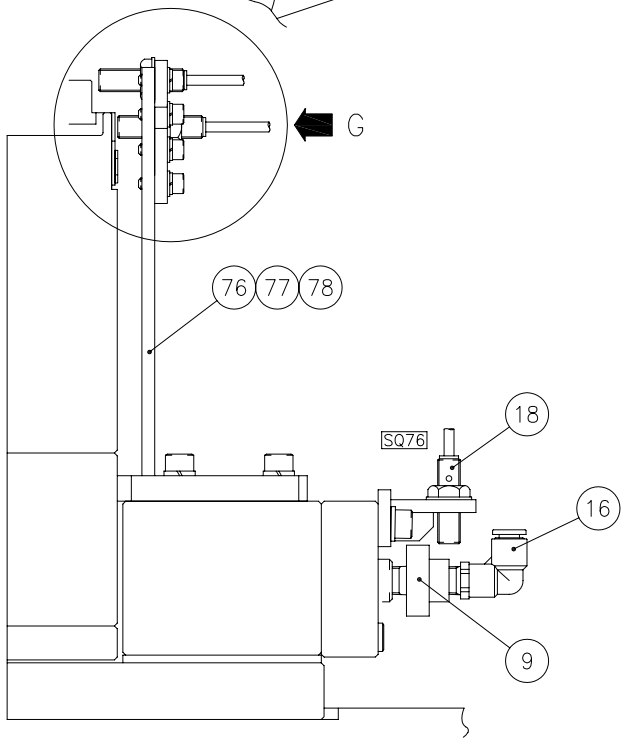

VIEW F

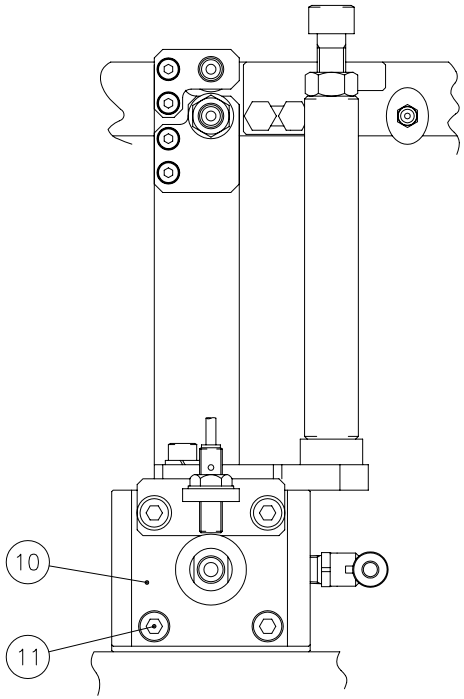

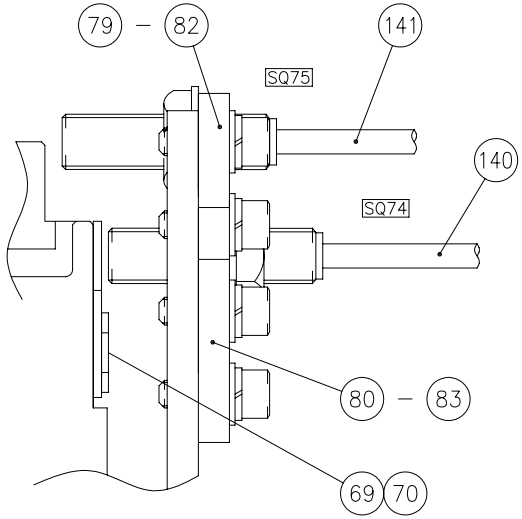

DETAIL G

6875550#1
6875550#2

From Serial No.36102001 and after

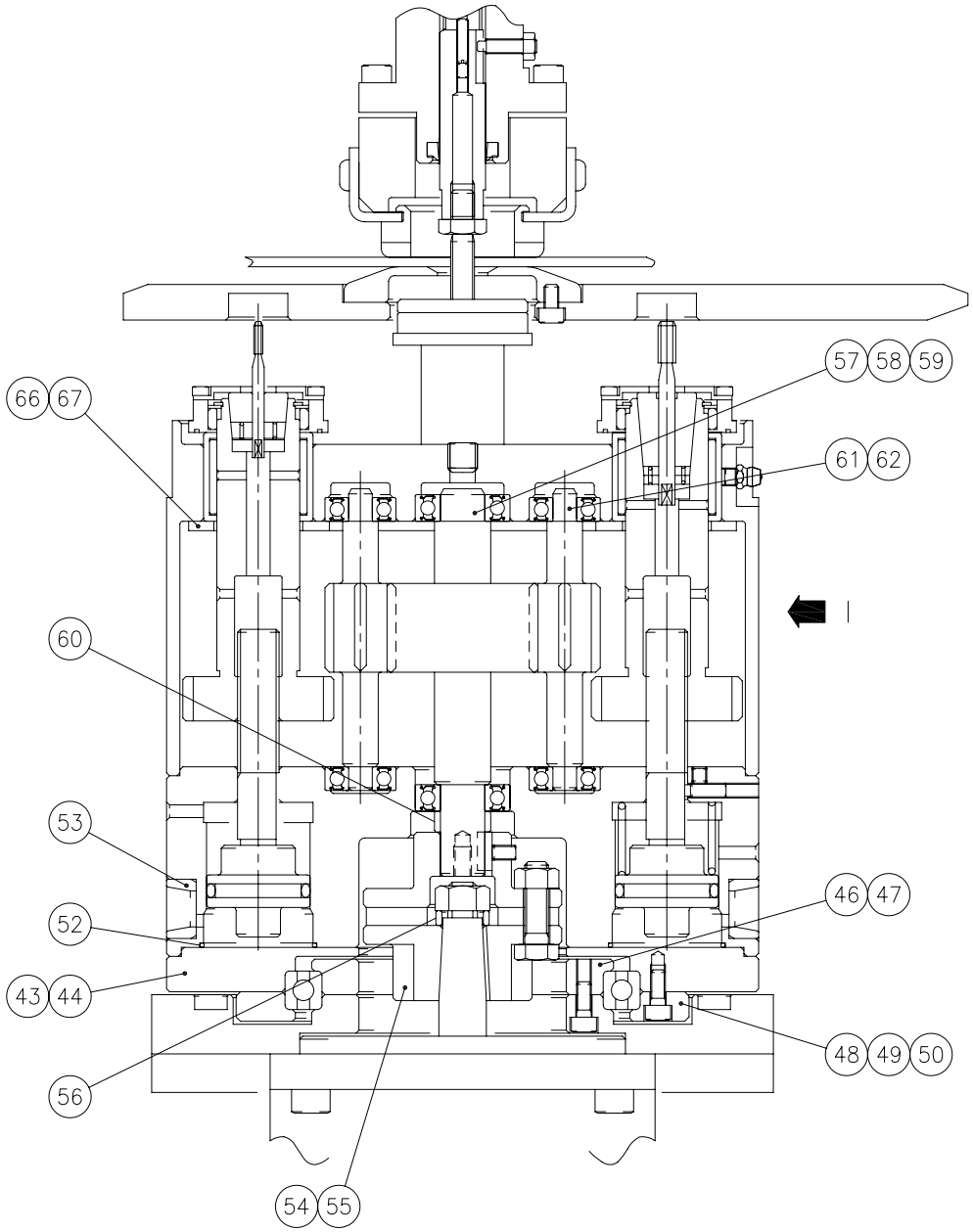

SECTION H–H

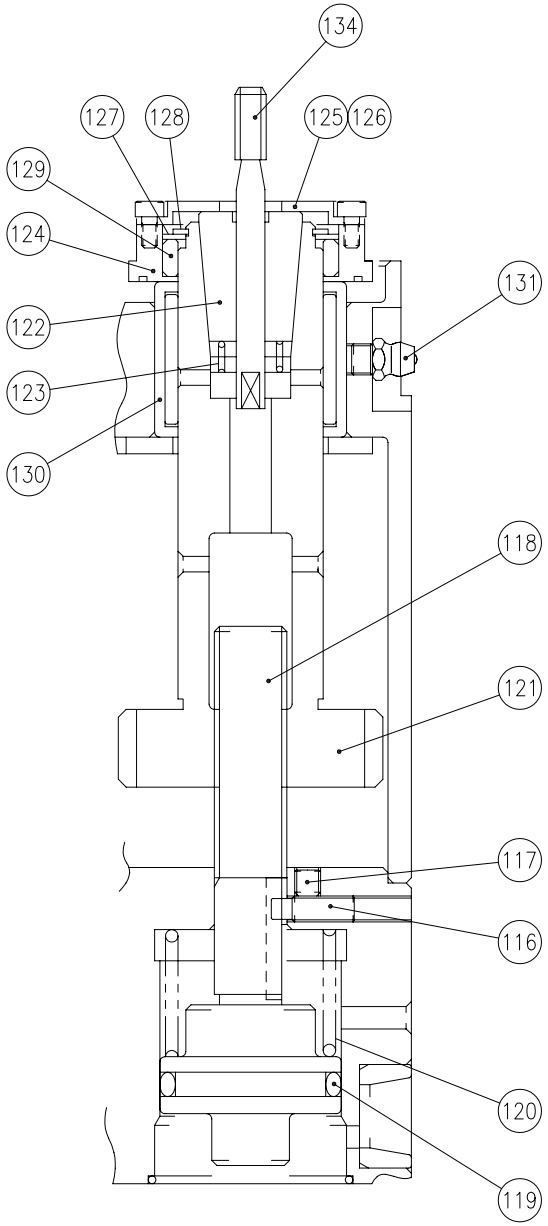

DETAIL I

6875550#1
6875550#2

From Serial No.36102001 and after

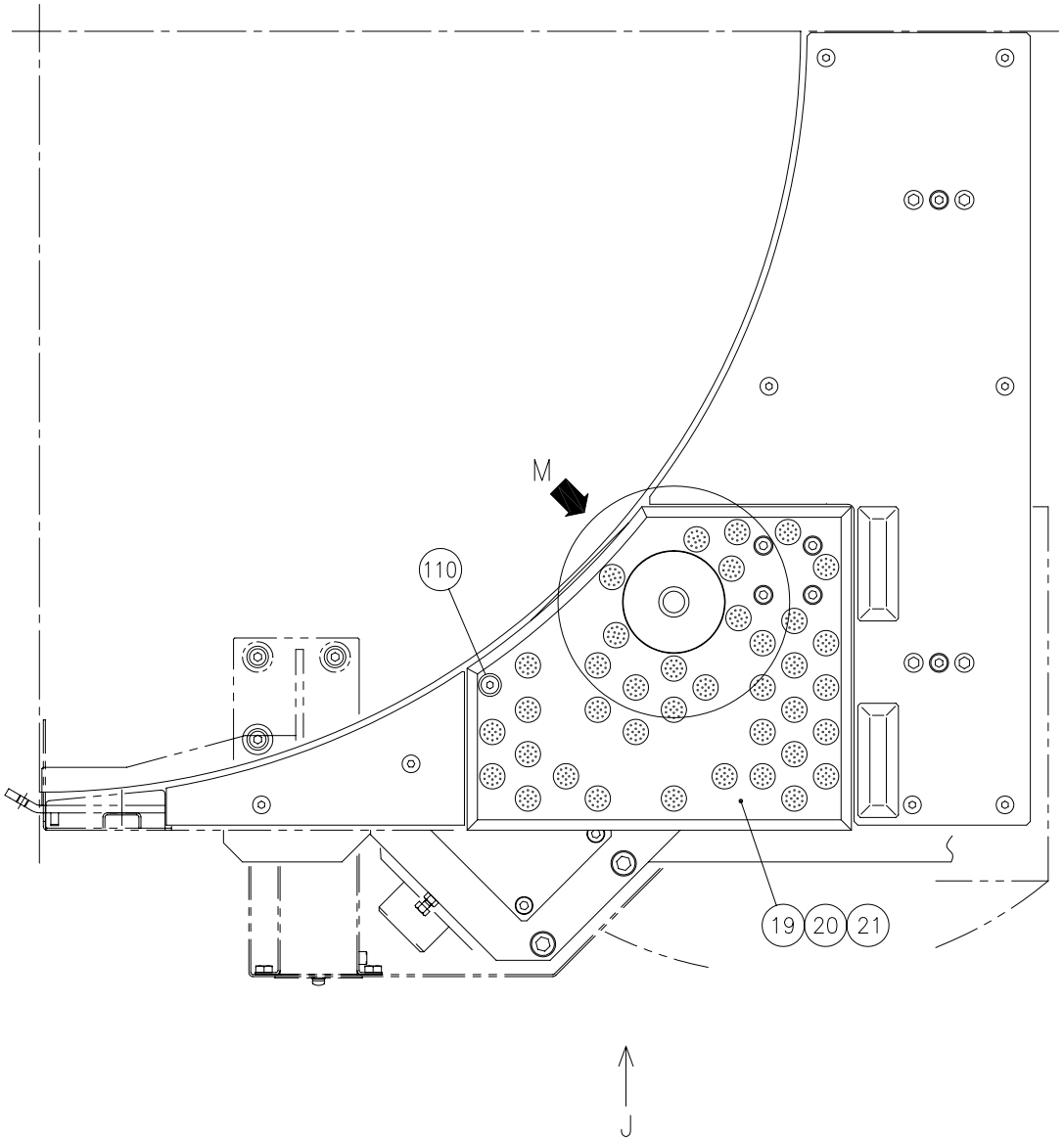

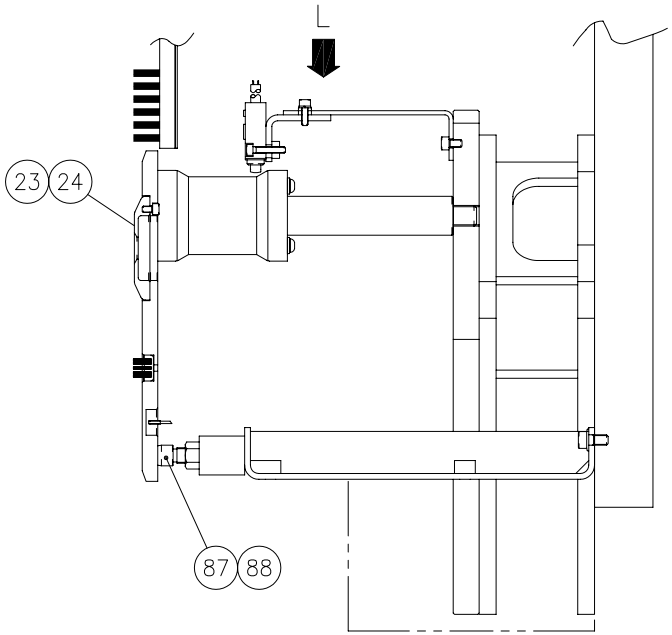

6875550#1
6875550#2

From Serial No.36102001 and after

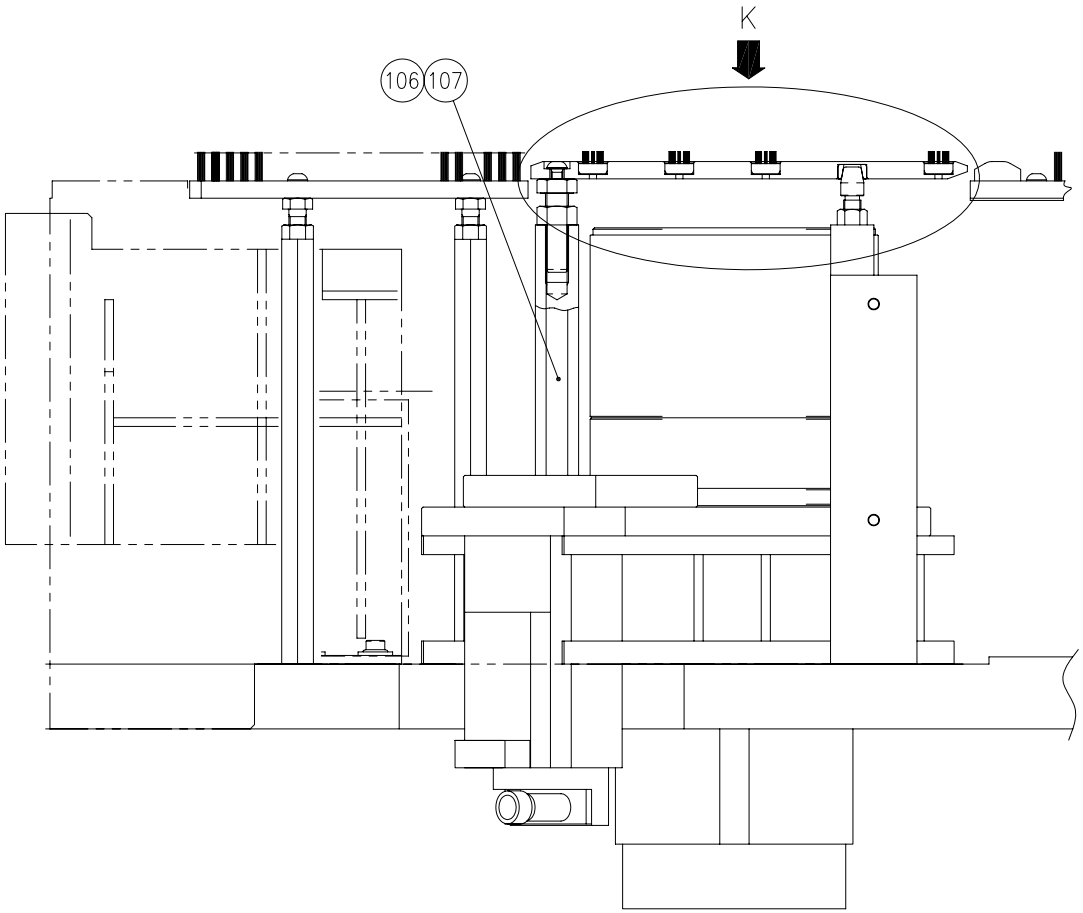

VIEW J

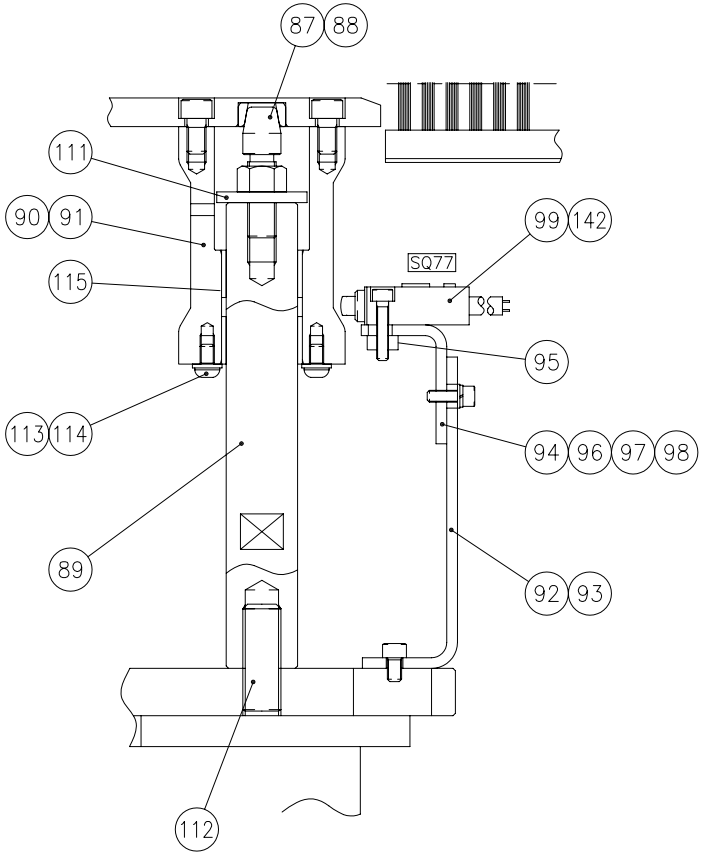

DETAIL L

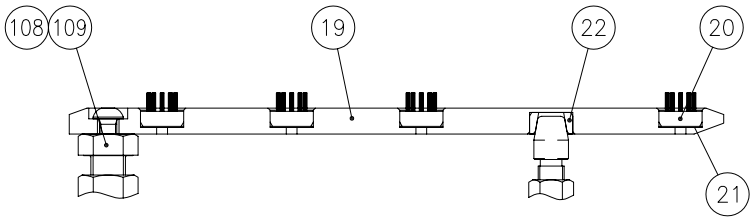

DETAIL K

6875550#1
6875550#2

From Serial No.36102001 and after

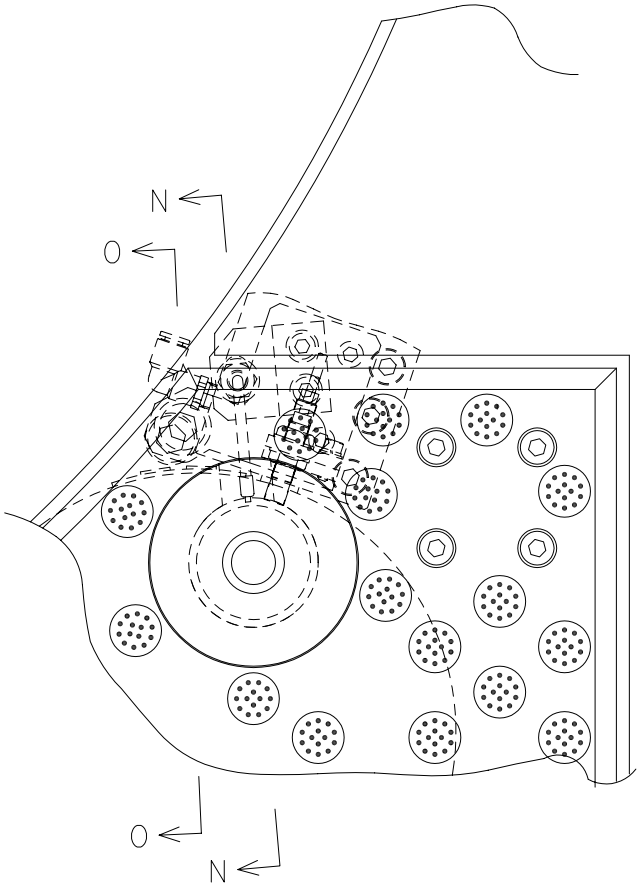

DETAIL M

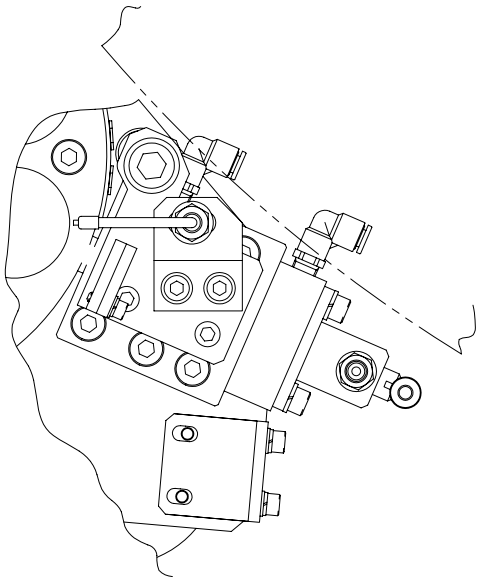

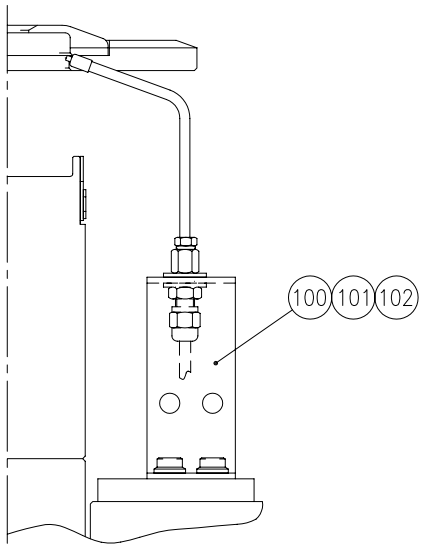

SECTION N–N

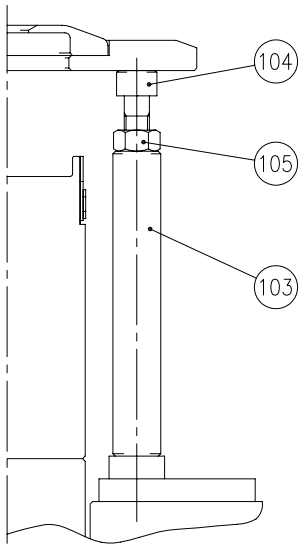

SECTION O–O

6875550#1
6875550#2

Multi Tapping(1) From Serial No.36102001 and after

Index	Code	Parts Name	Drawing No.	Type	Maker	Q'ty	Note
1	74578027	Index Pin Cylinder	6873112 A			1	
2	10571228	Hex Soc Cap Screw	P330230015	M8X65		6	
3	74701318	Index Pin Shim	6542008			1	
4	74578028	O Ring	P590000246	4D-P15		1	
5	74567131	Index Pin	6541968 D			1	
6	74570330	O Ring	P590002140	4D-P11	NOK	1	
7	74567133	Index Pin Ring	6546927			1	
8	74567134	O Ring	P590000253	4D-P29		1	
9	74570331	Index Pin Dog	6546926 B			1	
10	74578029	Cylinder Cap	6873113			1	
11	79565422	Hex Soc Cap Screw	P330220011	M6X25		2	
12	74570333	O Ring	P590002144	4D-S32	NOK	1	
13	74578031	Proximity Switch Bracket	6873114			1	
14	86283301	Hex Soc Cap Screw	P330220013	M6X35		2	
15	79564311	Spring Washer	P336050005	6		2	
16	74310045	Instant Fitting	P586564001	EL6-PT1/8	NITTA MOORE	1	
17	74310045	Instant Fitting	P586564001	EL6-PT1/8	NITTA MOORE	2	
18	74570427	Cable TAP-10-3	6820362	with FL7M-2J6HDL05(Yamatake)		1	
19	74572457	Tapping Plate	6915145 A			1	

Index	Code	Parts Name	Drawing No.	Type	Maker	Q'ty	Note
20	74570340	Brush	6573593			38	
21	74572438	Shim	6914378			38	
22	74567125	Index Pin Bushing	6541906 A			2	
23	74572458	Tapping Base	6813547 C			1	
24	36501002	Hex Soc Cap Screw	P330210002	M5X8		4	
25	74577609	Base Plate	6813549 A			1	
26	79568704	Hex Soc Cap Screw	P330250004	M12X25		6	
27	74570316	Unit Base	6821395			1	
28	36110743	Hex Soc Cap Screw	P330250006	M12X35		5	
29	74303703	Washer (M12)	0827014 B			5	
30	74567121	Block (A)	6542002 A			1	
31	79564804	Hex Soc Cap Screw	P330230006	M8X20		4	
32	86610326	Spring Washer	P336050006	8		4	
33	79567109	Washer	P336000006	8(Regular Round)		4	
34	79567722	Hex Soc Cap Screw	P330220009	M6X20		4	
35	74701317	Block (B)	6542003			1	
36	36325722	Bolt	P330030001	M8X10		2	
37	86610326	Spring Washer	P336050006	8		2	
38	79567109	Washer	P336000006	8(Regular Round)		2	

Index	Code	Parts Name	Drawing No.	Type	Maker	Q'ty	Note
39	79564804	Hex Soc Cap Screw	P330230006	M8X20		4	
40	10327561	Bolt	P330020007	M6X20		1	
41	44274544	Nut	P332000004	M6		1	
42	10443447	Socket Set Screw	P330550025	M6X8(Flat-end)		1	
43	74570317	Holder Base	6541902 D			1	
44	79564804	Hex Soc Cap Screw	P330230006	M8X20		4	
45	74701319	Drain Pipe (Lower)	6542009			1	
46	74701306	Bearing Retainer	6541903			1	
47	79567721	Hex Soc Cap Screw	P330210004	M5X12		6	
48	74701307	Main Gear	6541904 A			1	
49	74570318	Deep Groove Ball Bearing	P400010699	6819	NSK(equality)	1	
50	79567721	Hex Soc Cap Screw	P330210004	M5X12		6	
51	74570319	Lower Holder (2)	7424462 A			1	
52	74570320	O Ring	P590002139	4D-S36	NOK	8	
53	74567125	Index Pin Bushing	6541906 A			8	
54	74701334	Flexible Coupling	6541914			1	
55	10342302	Socket Set Screw	P330550017	M5X8(Flat-end)		1	
56	74701335	Collar	6541915			1	
57	74570321	Center Gear	7424464			1	

Index	Code	Parts Name	Drawing No.	Type	Maker	Q'ty	Note
58	74570322	Deep Groove Ball Bearing	P400010701	6002ZZ	NSK(equality)	2	
59	74701337	Key	6541917			1	
60	74701338	Spacer	6541918			1	
61	74570323	Idler Gear	7424465			8	
62	74570324	Ball Bearing	P400007022	628ZZ1MC3E	NSK(equality)	16	
63	74570325	Upper Holder	7424463			1	
64	74707962	Hex Soc Cap Screw	P330230026	M8X120		4	
65	79565423	Hex Soc Cap Screw	P330230004	M8X15		2	
66	74567151	Bearing Support	6541937 C			1	
67	31179338	Flat Head Bolt	P334520017	M5X8		8	
68	74570326	Drain Pipe	7424474			1	
69	74570327	Origin Dog	6810250			1	
70	74570328	Bolt	6573599			2	
71	74701309	Idler Gear	6541963 A			1	
72	74570324	Ball Bearing	P400007022	628ZZ1MC3E	NSK(equality)	2	
73	74701310	Drive Gear	6541965 A			1	
74	74570329	Gear Cover	6541966 C			1	
75	79566121	Hex Soc Cap Screw	P330230007	M8X25		4	
76	74578030	Proximity Switch Bracket	6871459			1	

Index	Code	Parts Name	Drawing No.	Type	Maker	Q'ty	Note
77	79564305	Hex Soc Cap Screw	P330220006	M6X15		2	
78	79564311	Spring Washer	P336050005	6		2	
79	74570335	Proximity Plate (Upper)	6810254			1	
80	86611902	Hex Soc Cap Screw	P330200016	M4X12		4	
81	79573507	Spring Washer	P336050003	4		4	
82	79573511	Washer	P336000003	4(Small Round)		4	
83	74570337	Proximity Plate (Lower)	6810259			1	
84	74319125	Socket Set Screw	P330550048	M10X10(Flat-end)		1	
85	74570338	Channel Brush	1542444			1	
86	74379265	Hex Soc Cap Screw	P330498009	GT-LA-M6X10	GOSHO Works	2	
87	74701388	Taper Pin	6541980 A			2	
88	31183535	Nut	P332000007	M12		2	
89	74570342	Hinge Support	6821401 A			1	
90	74570343	Hinge Holder	6915154			1	
91	79565423	Hex Soc Cap Screw	P330230004	M8X15		4	
92	74571443	LS Bracket	7424470 B			1	
93	31183033	Hex Soc Cap Screw	P330220003	M6X10		2	
94	74570345	LS Bracket (A)	7407675			1	
95	74300347	LS Setting Plate	6018063			1	

Index	Code	Parts Name	Drawing No.	Type	Maker	Q'ty	Note
96	79316109	Hex Soc Cap Screw	P330210006	M5X15		2	
97	79567114	Spring Washer	P336050004	5		2	
98	86612833	Washer	P336000004	5(Small Round)		2	
99	79316111	Hex Soc Cap Screw	P330210010	M5X25		2	
100	74578032	Nozzle Bracket	6871458			1	
101	31183033	Hex Soc Cap Screw	P330220003	M6X10		2	
102	79565419	Washer	P336000005	6(Regular Round)		2	
103	74570352	Stud (MT2)	7424472			1	
104	86610807	Hex Soc Cap Screw	P330240010	M10X40		1	
105	10427991	Nut	P332000006	M10		1	
106	74570353	Table Support	6821400 A	H26		1	
107	74388378	Socket Set Screw	P330550065	M12X40(Flat-end)		1	
108	75428644	Bolt	6140186	M16X55		1	
109	31183536	Nut	P332000009	M16		1	
110	74183316	Button Head Screw	P334500020	M8X20		1	
111	74570354	Lock Plate	6915153			1	
112	10388880	Socket Set Screw	P330550077	M16X45(Flat-end)		1	
113	36379029	Button Head Screw	P334500013	M6X10		2	
114	79565419	Washer	P336000005	6(Regular Round)		2	

Index	Code	Parts Name	Drawing No.	Type	Maker	Q'ty	Note
115	74570355	Plain Bearing	P407003176	DUB3020	DAIDO METAL	2	
116	74578015	Special Screw	P334704039	MSSG5-16	MISUMI	1	
117	21101768	Socket Set Screw	P330550015	M5X5(Flat-end)		1	
118	74578016	Lifter Piston (M2.5)	7424442 A			1	M2.5,M2.6
118	74578017	Lifter Piston (M3)	7424443 A			1	M3
118	74578018	Lifter Piston (M4)	7424444 A			1	M4
118	74578021	Lifter Piston (M5)	7424445 A			1	M5
118	74578022	Lifter Piston (M6)	7424446 A			1	M6
118	74578019	Lifter Piston (M8)	7424447 A			1	M8
119	74567134	O Ring	P590000253	4D-P29		1	
120	74701333	Return Spring	6541913			1	
121	74570365	Tapping Gear (M2.5)	7424452			1	M2.5,M2.6
121	74570366	Tapping Gear (M3)	7424453			1	M3
121	74570367	Tapping Gear (M4)	7424454			1	M4
121	74570368	Tapping Gear (M5)	7424455			1	M5
121	74570369	Tapping Gear (M6)	7424456			1	M6
121	74572440	Tapping Gear (M8)	7424457			1	M8
122	74570370	Tap Collet (M2.5)	7424459 A			1	M2.5,M2.6
122	74570371	Tap Collet (M3)	3208352			1	M3

Index	Code	Parts Name	Drawing No.	Type	Maker	Q'ty	Note
122	74570372	Tap Collet (M4)	6543496 A			1	M4
122	74570373	Tap Collet (M5)	6545673 A			1	M5
122	74570374	Tap Collet (M6)	3208359			1	M6
122	74572441	Tap Collet (M8)	3208370			1	M8
123	74701374	Return Spring	6542004			1	
124	74567152	Lock Holder	6541932 A			1	
125	74570357	Lock Cover	6915143			1	
126	86239039	Hex Soc Cap Screw	P330200001	M3X6		4	
127	74701353	Backup Plate	6541934 A			1	
128	86264209	Locating Snap Ring	P406108046	STW-25	OCHIAI	1	
129	74570358	Lock Bushing	6541007			1	
130	74567154	Ball Bearing	P402124005	NK28/30R	NTN	1	
131	10332918	Grease Nipple	P560600001	A-M6F		1	
132	74701366	Legend Plate (M2.5)	6541955 A			1	M2.5
132	74572442	Legend Plate (M2.6)	6542180			1	M2.6
132	74701367	Legend Plate (M3)	6541956 A			1	M3
132	74701368	Legend Plate (M4)	6541957 A			1	M4
132	74701369	Legend Plate (M5)	6541958 A			1	M5
132	74701370	Legend Plate (M6)	6541959 A			1	M6

Index	Code	Parts Name	Drawing No.	Type	Maker	Q'ty	Note
132	74701371	Legend Plate (M8)	6541960 A			1	M8
133	31177859	Button Head Screw	P334500001	M3X6		2	
134	74570375	Point Tap (M2.5)	7830721	V-POT-M2.5X0.45	OSG	10	M2.5(Cut Tap)
134	74575014	Point Tap (M2.6)	7830722	V-POT-M2.6X0.45	OSG	10	M2.6(Cut Tap)
134	74570376	Point Tap (M3)	7830723	V-POT-M3X0.5	OSG	10	M3(Cut Tap)
134	74570377	Point Tap (M4)	7830724	V-POT-M4X0.7	OSG	10	M4(Cut Tap)
134	74570378	Point Tap (M5)	7830607 A	V-RFT-M5X0.8	OSG	10	M5(Cut Tap)
134	74570379	Point Tap (M6)	7830608 A	V-RFT-M6X1	OSG	10	M6(Cut Tap)
134	74711135	Point Tap (M8)	7830609 A	V-RFT-M8X1.25	OSG	10	M8(Cut Tap)
134	74572447	Tap	7830779	TIN-TF(M2.5X0.45)	TANOI Mfg	10	M2.5(Rolled Tap)
134	74572448	Tap	7830780	TIN-TF(M2.6X0.45)	TANOI Mfg	10	M2.6(Rolled Tap)
134	74572443	Tap	7830707	TIN-TF(M3X0.5)	TANOI Mfg	10	M3(Rolled Tap)
134	74572444	Tap	7830708	TIN-TF(M4X0.7)	TANOI Mfg	10	M4(Rolled Tap)
134	74572445	Tap	7830709	TIN-TF(M5X0.8)	TANOI Mfg	10	M5(Rolled Tap)
134	74572446	Tap	7830710	TIN-TF(M6X1)	TANOI Mfg	10	M6(Rolled Tap)
134	74567167	Tap	P632053034	TIN-TF(2)-M8	TANOI Mfg	10	M8(Rolled Tap)
135	74722945	Instant Fitting	P586535014	PNM-10-PT1/4-BSM	JUNKOSHA	1	Accessory
136	71362092	Plastic Hose	P230243018	UH30-10(Black)-1M	JUNKOSHA	1	Accessory
137		Oil Can	P370000001	2L	NIKOTEC	1	Accessory

Unit No. 148

Multi Tapping(1) From Serial No.36102001 and after

Index	Code	Parts Name	Drawing No.	Type	Maker	Q'ty	Note
138	74578047	Multi Tap Jig (1)	6817111			1	List Only
139	74578048	Multi Tap Jig (2)	6817112			1	List Only
140	74570425	Cable TAP-1	6820360	with FL7M-2K6HLO5(Yamatake)		1	
141	74570426	Cable TAP-10-2	6820361	with FL7M-2K6HL05(Yamatake)		1	
142	74570428	Cable TAP-10-4	6820363	with D4C-1301(OMRON)		1	

Multi Tapping(2)-1/3 <Tap Break Detection (Cutting)>

From Serial No.36102001 and after

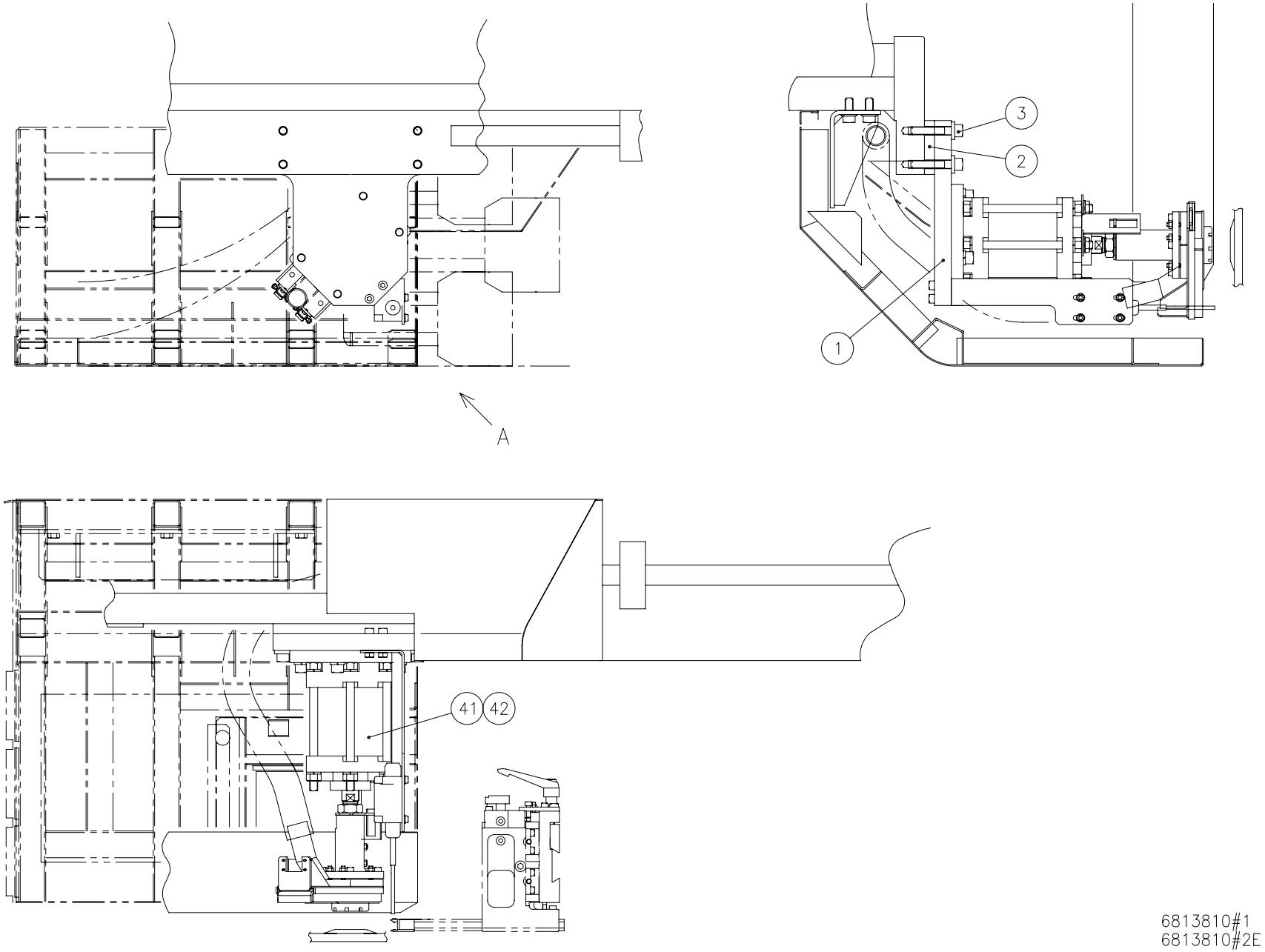

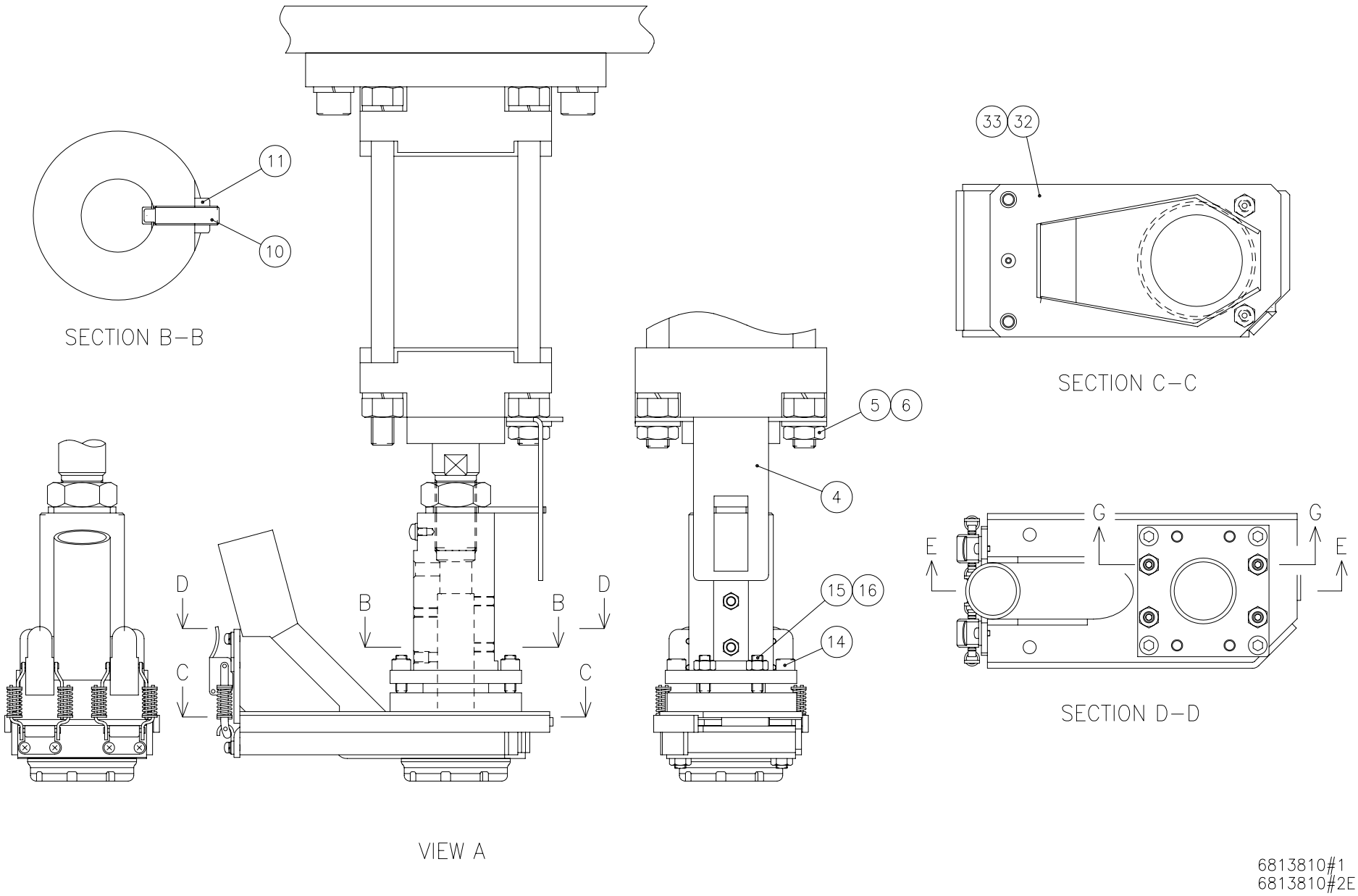
11
10
SECTION B–B
33
32
SECTION C–C
5
6
4
15
16
14
D
B
B
D
C
C
G
G
E
E
SECTION D–D
VIEW A
6813810#1
6813810#2E

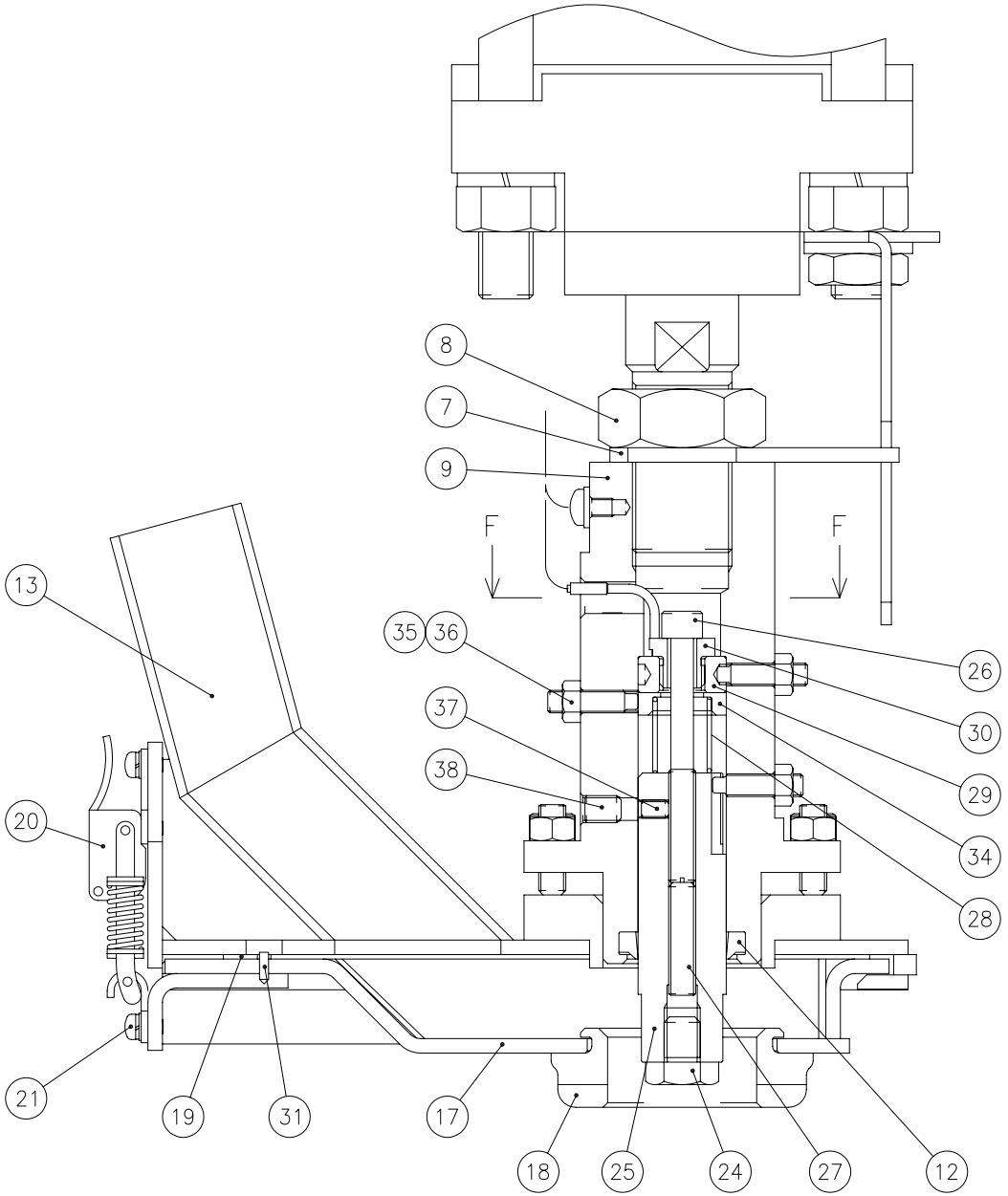

SECTION E–E

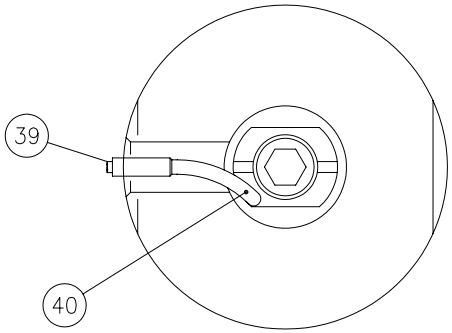

SECTION F–F

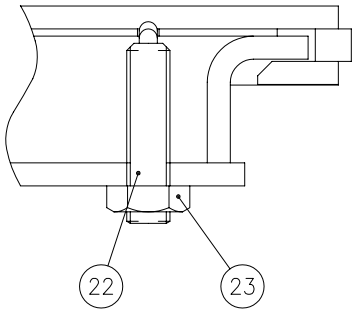

SECTION G–G

6813810#1
6813810#2E

Unit No. 149

Multi Tapping(2) From Serial No.36102001 and after

Index	Code	Parts Name	Drawing No.	Type	Maker	Q'ty	Note
1	74570383	Cylinder Base	6813826			1	
2	74570384	Spacer	6813827			1	
3	36527151	Hex Soc Cap Screw	P330250012	M12X65		4	
4	74570385	Bracket	6810282			1	
5	36386818	Nut	P332000020	M12(Thin)		2	
6	86613931	Washer	P336000008	12(Regular Round)		2	
7	74570386	Retainer	6810283			1	
8	74567178	Accessory For Air Cylinder	P550082063	NT-08	SMC	1	
9	74570387	Cylinder Head	6810284 C			1	
10	74570388	Socket Set Screw	P330570015	M5X20(Dog-end)		2	
11	78186244	Nut	P332000016	M5(Thin)		2	
12	74570389	Wiper Ring	P590302001	DSI-20	NOK	1	
13	74570390	Absorber Duct (Upper)	6810296 A			1	
14	79565422	Hex Soc Cap Screw	P330220011	M6X25		4	
15	10443415	Socket Set Screw	P330550031	M6X20(Flat-end)		4	
16	44274544	Nut	P332000004	M6		4	
17	74418143	Absorber Duct (Lower)	6817177			1	
18	74418144	Urethane Absorber (L)	6817178			1	Brush Table 3.2mm
18	74578846	Urethane Absorber (H)	6817179			1	Brush Table 4.5mm

Index	Code	Parts Name	Drawing No.	Type	Maker	Q'ty	Note
19	74570394	Absorber Duct Rubber	6810299 A			1	
20	74575019	Latch	P317422011	C-7-2	TAKIGEN	2	Brush Table 3.2mm
20	74570395	Latch	P317422002	C-1007-2	TAKIGEN	2	Brush Table 4.5mm
21	74575020	Pan Head Screw with Washer	P334200144	M3X6(Chromate P-4)		8	Brush Table 3.2mm
21	74560868	Pan Head Screw	P334100003	M3X6		4	Brush Table 4.5mm
22	74570396	Spring Plunger	P338104021	NPJL6-3	MISUMI	2	
23	86282914	Nut	P332000017	M6(Thin)		2	
24	74570397	Stop Pin	6810276			1	
25	74570398	Detecting Slider	6810287 B			1	
26	74570399	Bolt	6810288 C			1	
27	71150145	Socket Set Screw	P330550032	M6X25(Flat-end)		1	
28	74570401	Return Spring	6810289 A			1	
29	74570402	Insulator	6810290 C			1	
30	74570403	Screw	6810274 B			1	
31	10375162	Spring Pin	P337030002	2X6		1	Brush Table 3.2mm
31	74418913	Spring Pin	P337030001	2X5		1	Brush Table 4.5mm
32	74570394	Absorber Duct Rubber	6810299 A			2	Accessory
33	74570397	Stop Pin	6810276			2	Accessory
34	74418145	Collar	6810293 B			1	

Index	Code	Parts Name	Drawing No.	Type	Maker	Q'ty	Note
35	74570388	Socket Set Screw	P330570015	M5X20(Dog-end)		1	
36	78186244	Nut	P332000016	M5(Thin)		1	
37	10380090	Socket Set Screw	P330550009	M4X6(Flat-end)		1	
38	10443447	Socket Set Screw	P330550025	M6X8(Flat-end)		1	
39	74570405	Vinyl Cord (P.V.C)	P342208003	ME15EU13-0.5M	JUNKOSHA	1	
40	74569474	Tube	P230348005	A-1.5X0.2(Black)	SEI	1	
41	74419408	Air Cylinder (Repositioning)	7831583	CA2G80-60-DCI0897I	SMC	1	
42	36110743	Hex Soc Cap Screw	P330250006	M12X35		4	

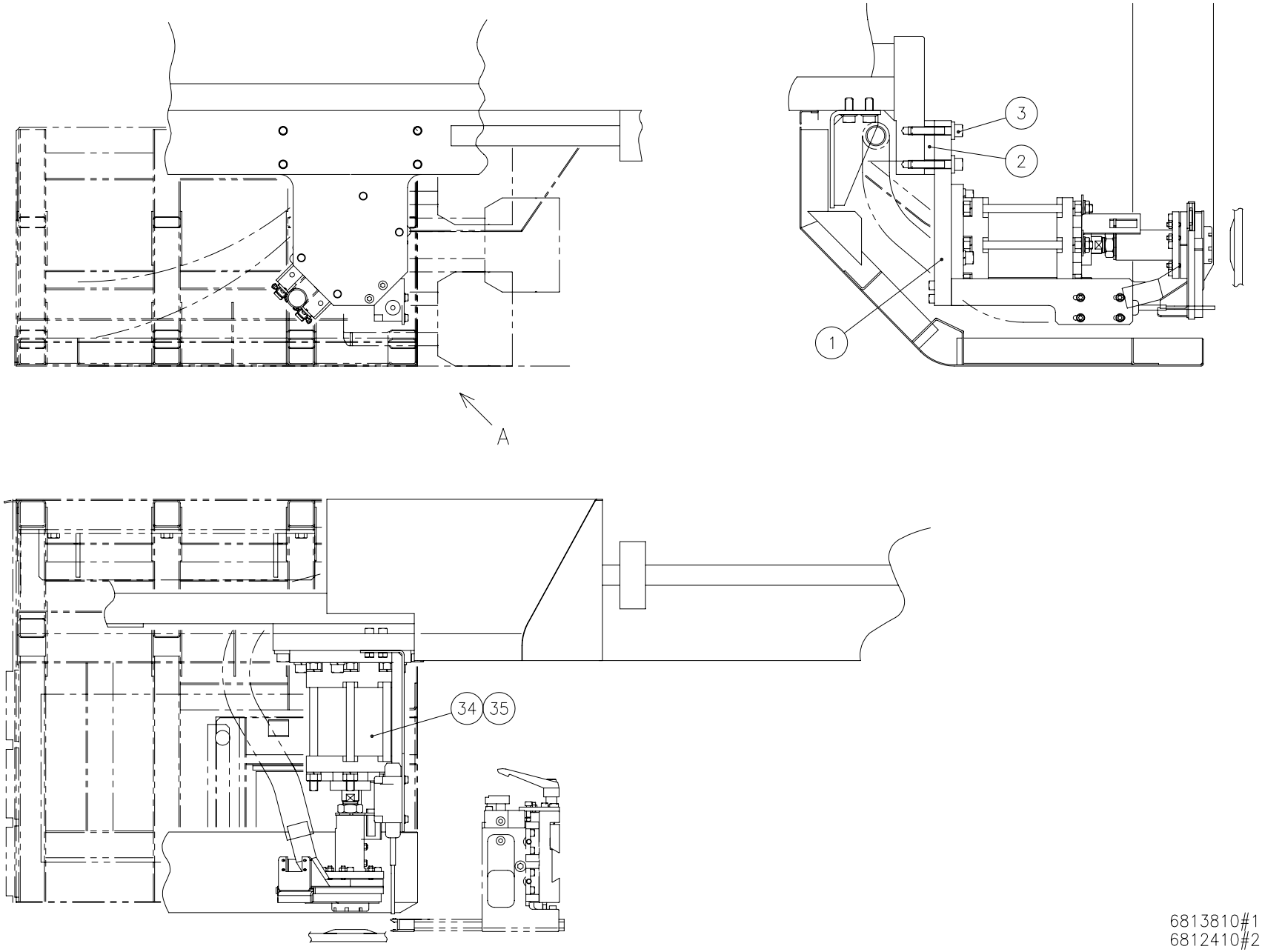
3
2
1
A
34
35
6813810#1
6812410#2

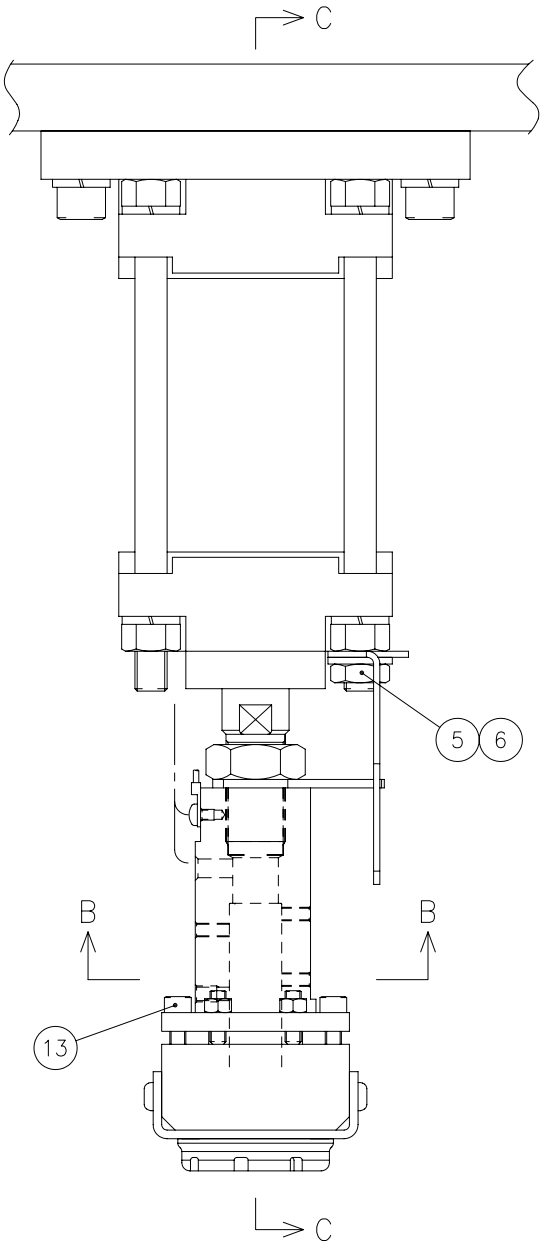

VIEW A

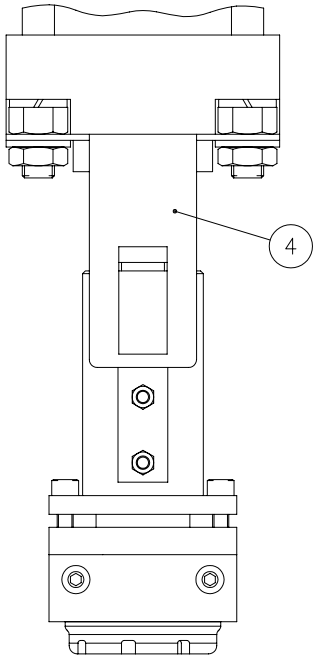

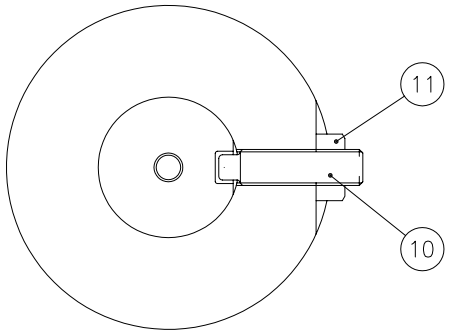

SECTION B–B

6813810#1
6812410#2

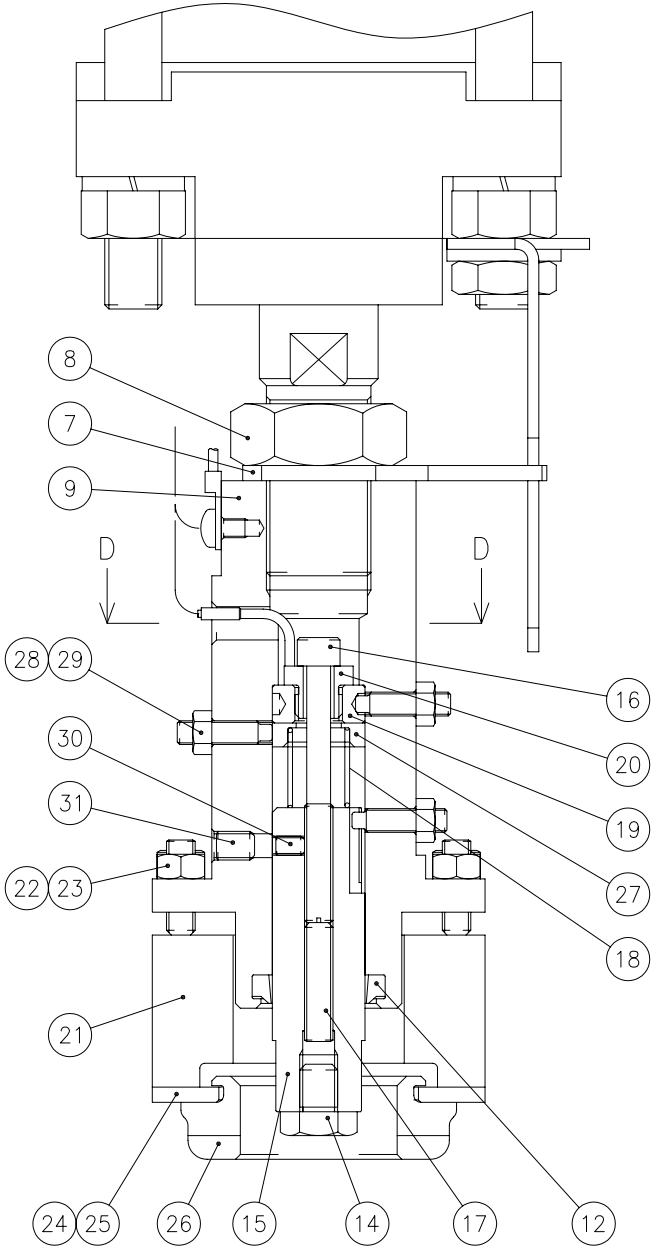

SECTION C–C

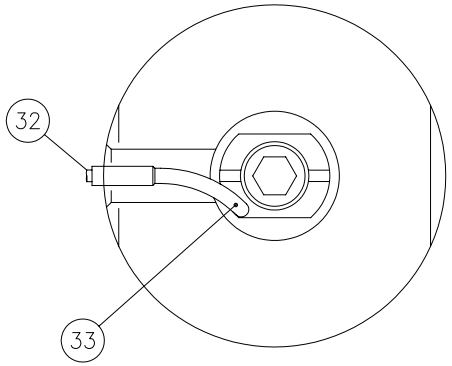

SECTION D–D

6813810#1
6812410#2

Index	Code	Parts Name	Drawing No.	Type	Maker	Q'ty	Note
1	74570383	Cylinder Base	6813826			1	
2	74570384	Spacer	6813827			1	
3	36527151	Hex Soc Cap Screw	P330250012	M12X65		4	
4	74570385	Bracket	6810282			1	
5	36386818	Nut	P332000020	M12(Thin)		2	
6	86613931	Washer	P336000008	12(Regular Round)		2	
7	74570386	Retainer	6810283			1	
8	74567178	Accessory For Air Cylinder	P550082063	NT-08	SMC	1	
9	74570387	Cylinder Head	6810284 C			1	
10	74570388	Socket Set Screw	P330570015	M5X20(Dog-end)		2	
11	78186244	Nut	P332000016	M5(Thin)		2	
12	74570389	Wiper Ring	P590302001	DSI-20	NOK	1	
13	31178117	Hex Soc Cap Screw	P330220010	M6X22		4	
14	74570397	Stop Pin	6810276			1	
15	74570398	Detecting Slider	6810287 B			1	
16	74570399	Bolt	6810288 C			1	
17	71150145	Socket Set Screw	P330550032	M6X25(Flat-end)		1	
18	74570401	Return Spring	6810289 A			1	
19	74570402	Insulator	6810290 C			1	

Index	Code	Parts Name	Drawing No.	Type	Maker	Q'ty	Note
20	74570403	Screw	6810274 B			1	
21	74577610	Block (for Urethane)	7409471 A			1	
22	10443415	Socket Set Screw	P330550031	M6X20(Flat-end)		4	
23	44274544	Nut	P332000004	M6		4	
24	74578847	Bracket (for Urethane)	6817315			1	
25	74300624	Button Head Screw	P334500015	M6X15		4	
26	74418144	Urethane Absorber (L)	6817178			1	Brush Table 3.2mm
26	74578846	Urethane Absorber (H)	6817179			1	Brush Table 4.5mm
27	74418145	Collar	6810293 B			1	
28	74570388	Socket Set Screw	P330570015	M5X20(Dog-end)		1	
29	78186244	Nut	P332000016	M5(Thin)		1	
30	10380090	Socket Set Screw	P330550009	M4X6(Flat-end)		1	
31	10443447	Socket Set Screw	P330550025	M6X8(Flat-end)		1	
32	74570405	Vinyl Cord (P.V.C)	P342208003	ME15EU13-0.5M	JUNKOSHA	1	
33	74569474	Tube	P230348005	A-1.5X0.2(Black)	SEI	1	
34	74419408	Air Cylinder (Repositioning)	7831583	CA2G80-60-DCI0897I	SMC	1	
35	36110743	Hex Soc Cap Screw	P330250006	M12X35		4	

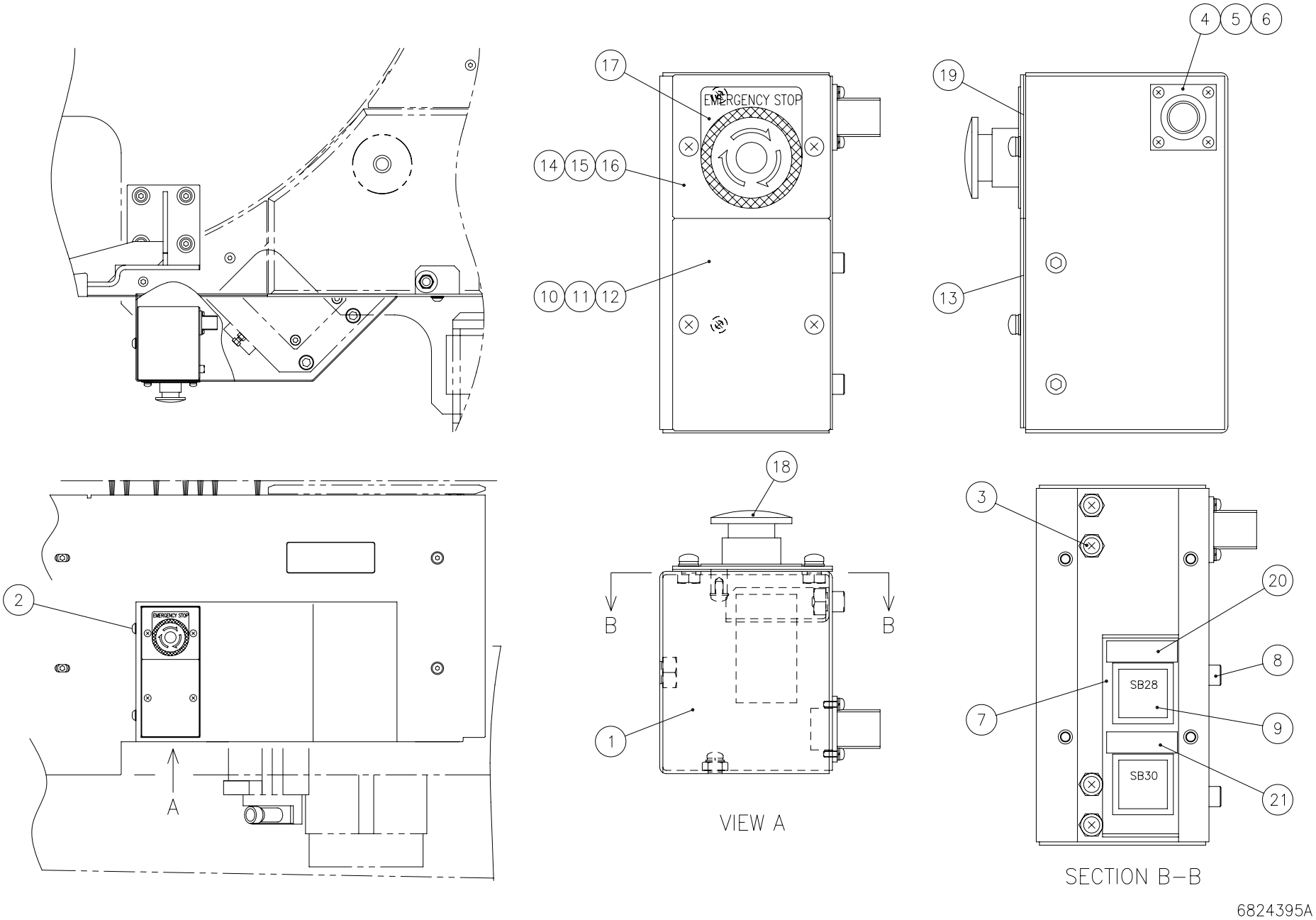
EMERGENCY STOP
SB28
SB30
A
B
B
VIEW A
SECTION B–B
6824395A

Index	Code	Parts Name	Drawing No.	Type	Maker	Q'ty	Note
1	74571446	M/T Operation Box	6824410			1	
2	10569021	Button Head Screw	P334500019	M8X15		2	
3	74569811	Pan Head Screw with Washer	P334200113	M4X6(Chromate P-4)		4	
4	74388447	Plastic R Connector	P862032007	206705-1	AMP	1	9P
5	74379484	Plug Type Terminal	P862142002	66099-2	AMP	9	
6	74569454	Pan Head Screw with Washer	P334200145	M3X8(Chromate P-4)		4	
7	74571447	Housing Plate (Operation Box)	6824411			1	
8	31183033	Hex Soc Cap Screw	P330220003	M6X10		2	
9	74570049	Push Switch	P821084087	AR22F0S-10W-Z037	FUJI Electric	2	
10	74571448	Cap (1)(Operating Box)	6824412			1	
11	74570033	Pan Head Screw with Washer	P334200134	M5X10(Chromate P-4)		2	
12	74569811	Pan Head Screw with Washer	P334200113	M4X6(Chromate P-4)		1	
13	74571449	Packing (1)(Operating Box)	6824414			1	
14	74571450	Cap (2)(Operating Box)	6824413			1	
15	74570033	Pan Head Screw with Washer	P334200134	M5X10(Chromate P-4)		2	
16	74569811	Pan Head Screw with Washer	P334200113	M4X6(Chromate P-4)		1	
17	74307366	Legend Plate	6503028			1	for EU,EXP
17	74419409	Legend Plate (Emergency Stop)	6817868			1	Chinese
18	74571451	Push Switch	QZZ022829	AR30V3R-02RZ235	FUJI Electric	1	

Index	Code	Parts Name	Drawing No.	Type	Maker	Q'ty	Note
19	74571452	Packing (2)(Operating Box)	6824415			1	
20	74570418	Legend Plate 1(TAP Operate)ENG	6822939			1	English
20	74570420	Legend Plate 1(TAP Operate)FRA	6822942			1	French
20	74570419	Legend Plate 1(TAP Operate)GER	6822941			1	German
20	74570417	Legend Plate 1(TAP Operate)ITA	6822940			1	Italian
20	74419410	Legend Plate 1(TAP Operate)CH.	6817866			1	Chinese
21	74570422	Legend Plate 2(TAP Operate)ENG	6822943			1	English
21	74570424	Legend Plate 2(TAP Operate)FRA	6822946			1	French
21	74570423	Legend Plate 2(TAP Operate)GER	6822945			1	German
21	74570421	Legend Plate 2(TAP Operate)ITA	6822944			1	Italian
21	74419411	Legend Plate 2(TAP Operate)CH.	6817867			1	Chinese

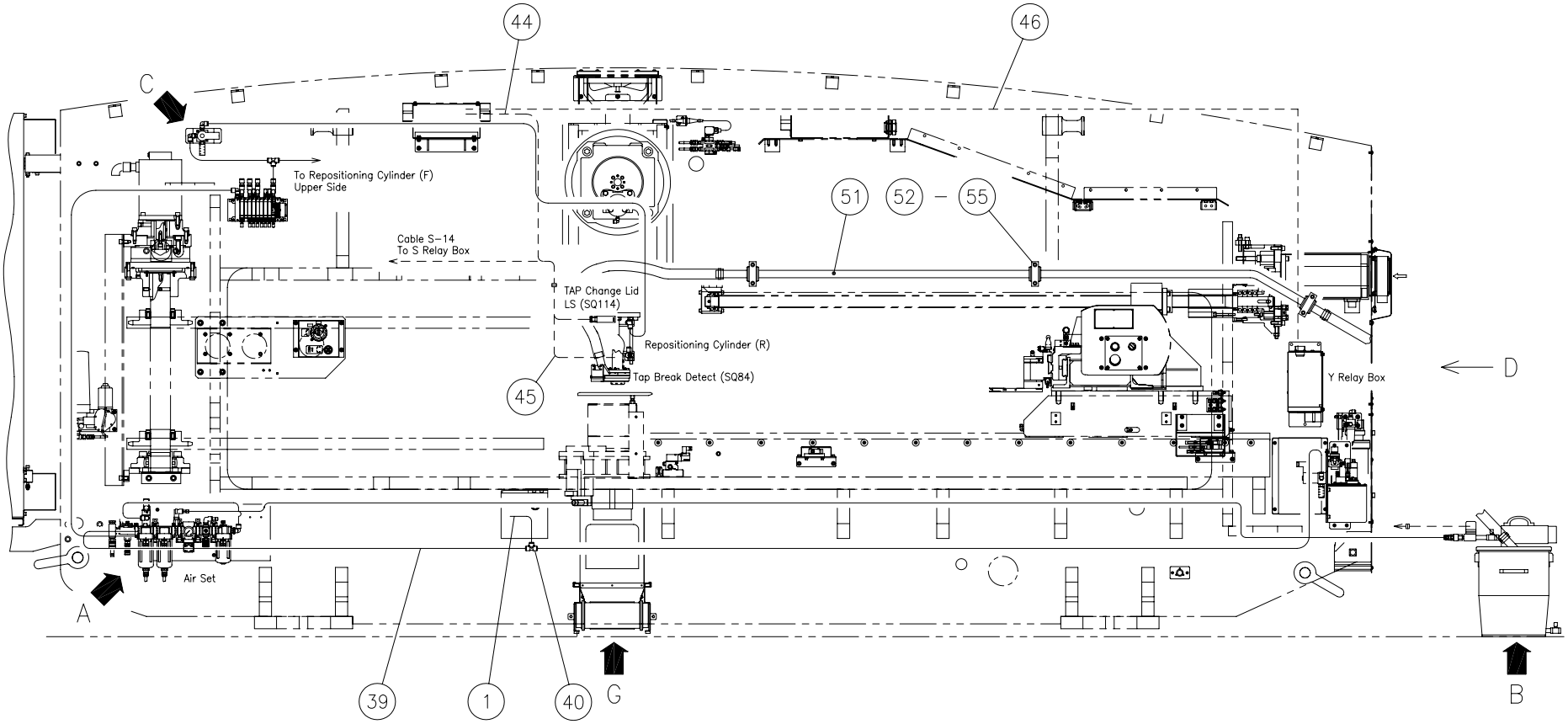
44
46
C
To Repositioning Cylinder (F)
Upper Side
51
52
55
Cable S-14
To S Relay Box
TAP Change Lid
LS (SQ114)
Repositioning Cylinder (R)
Tap Break Detect (SQ84)
45
Y Relay Box
D
Air Set
A
39
1
40
G
B

6875553A

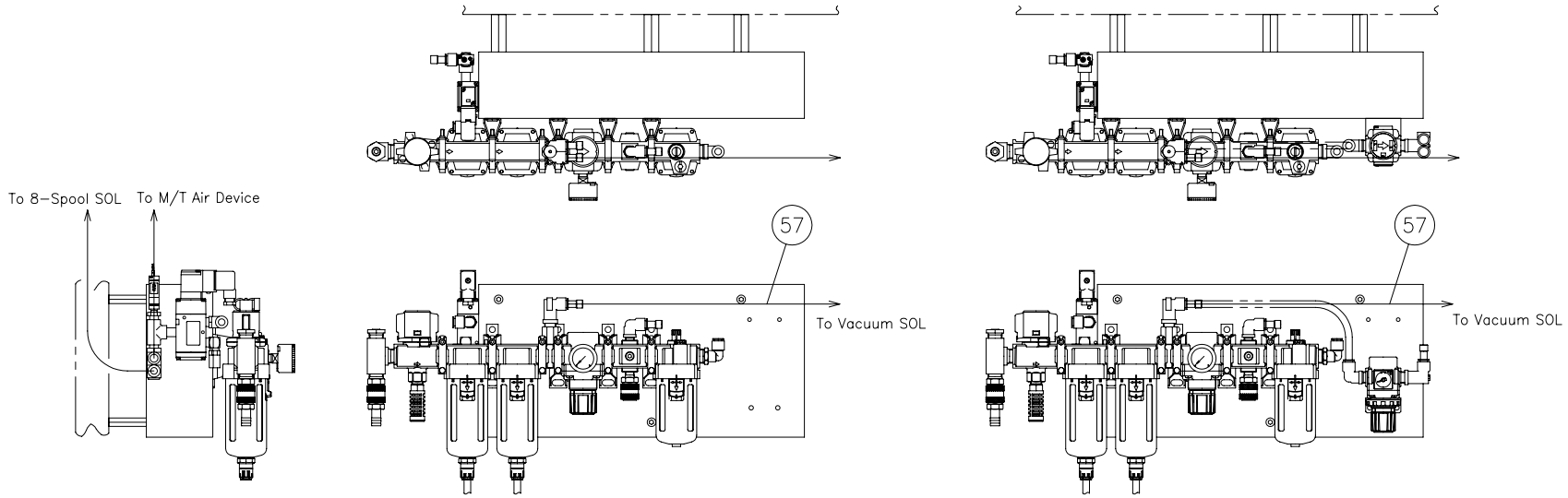

<STD>

<For PV>

DETAIL A

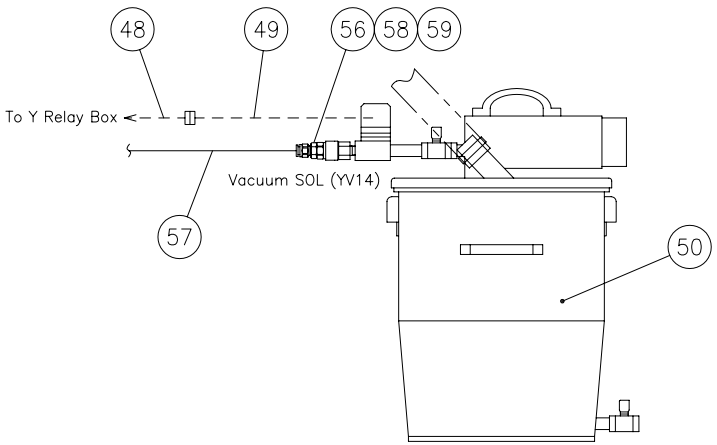

DETAIL B

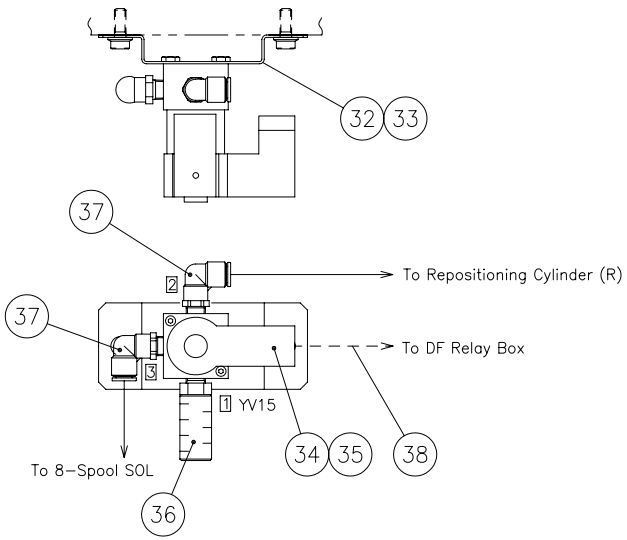

DETAIL C

6875553A

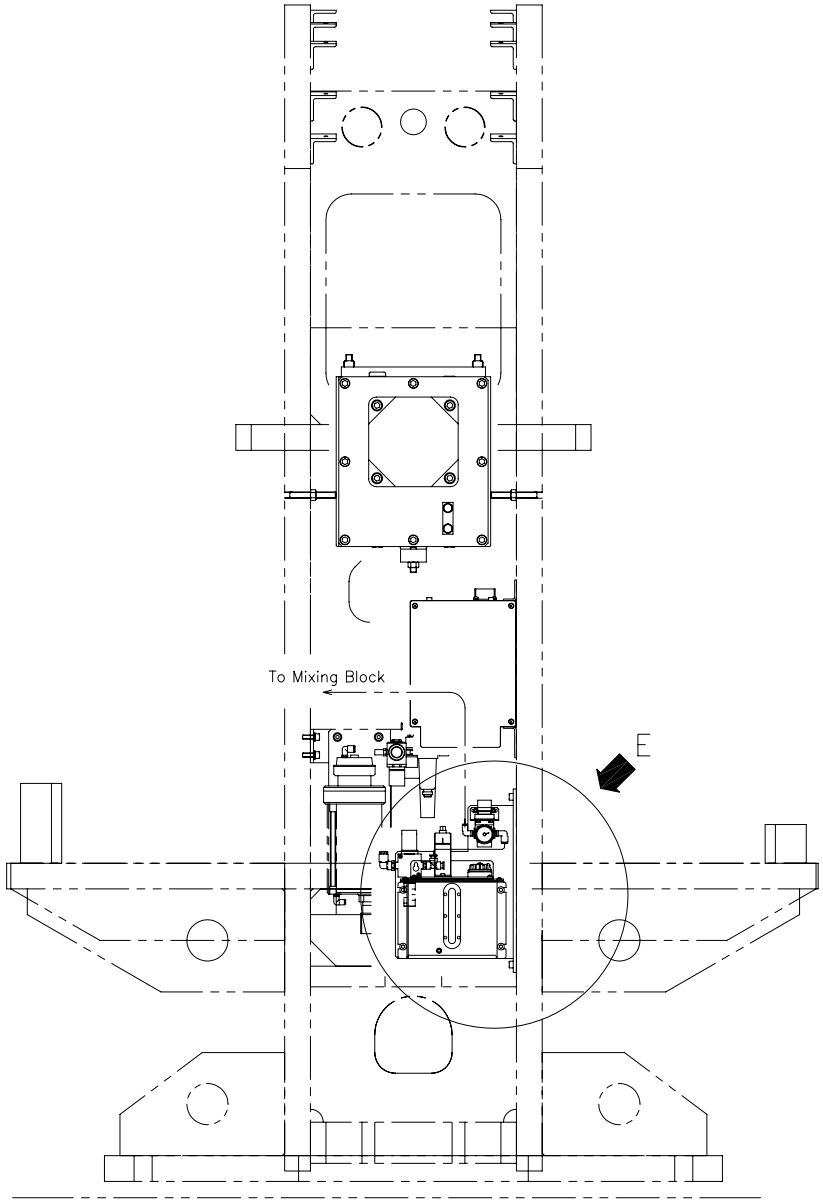

VIEW D

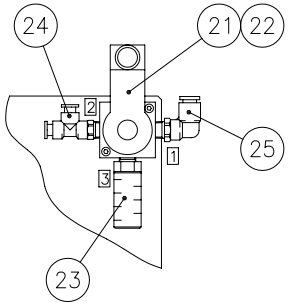

VIEW F

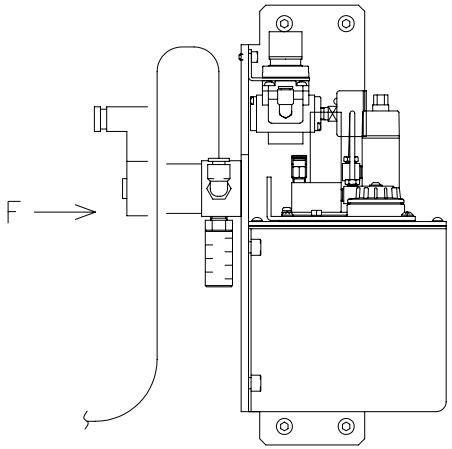

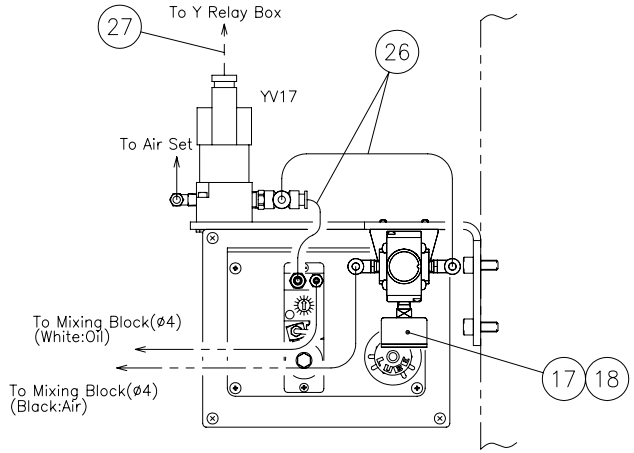

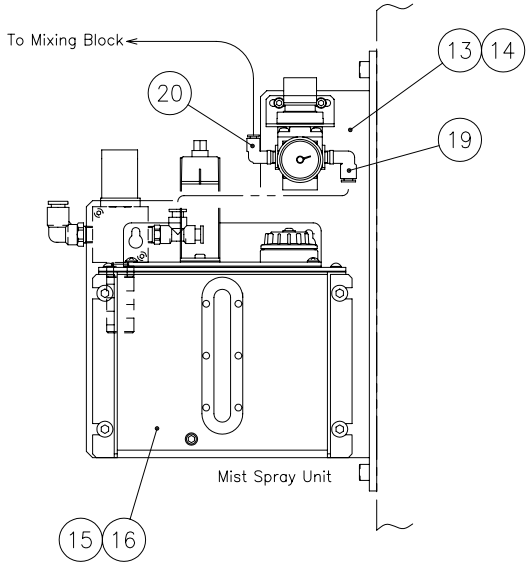

DETAIL E

6875553A

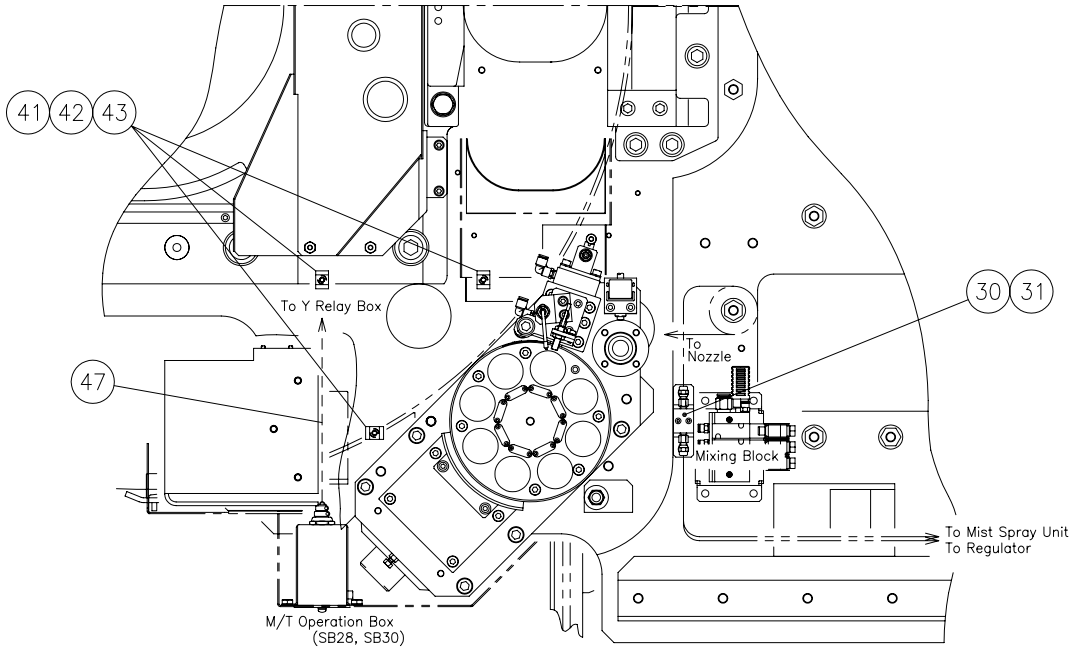

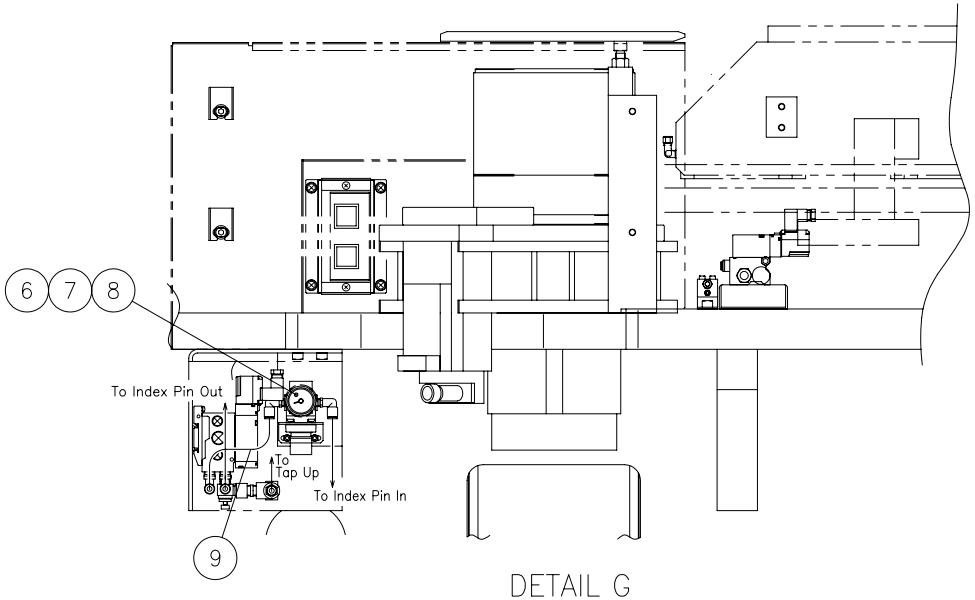

DETAIL G

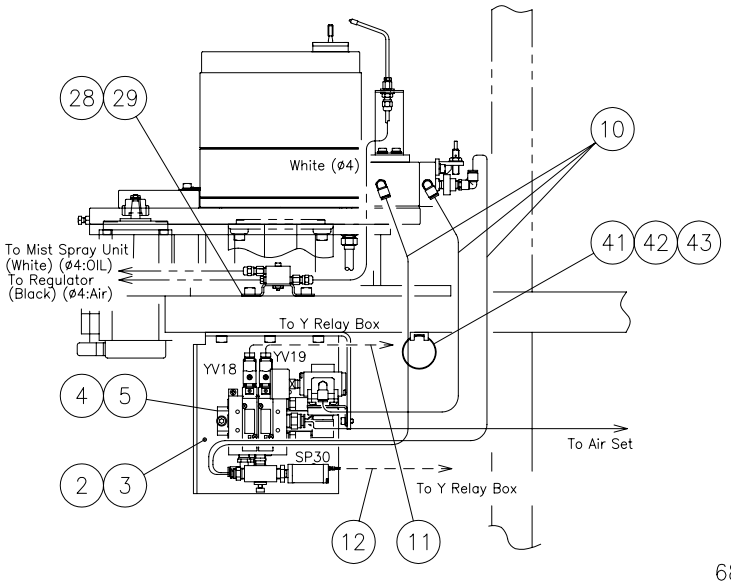

6875553A

Index	Code	Parts Name	Drawing No.	Type	Maker	Q'ty	Note
1	74382882	Plastic Hose	P230242101	U2-4-10X6.5(Black)-0.5M	NITTA MOORE	1	
2	74418914	MT Solenoid Bracket	6871451			1	
3	79564804	Hex Soc Cap Screw	P330230006	M8X20		3	
4	74578039	Manifold Valve	7831540 A		SMC	1	
5	75428708	Flange Socket Bolt	P330468015	M6X10	NISSAN NEJI	2	
6	74578040	Air Pressure Valve	P553002082	AR20-01BG	SMC	1	
7	79573416	Hex Soc Cap Screw	P330210003	M5X10		2	
8	36161080	Instant Fitting	P586623031	KQ2L06-01S	SMC	2	
9	74570235	Plastic Hose	P230222087	U2-4-6X4(Black)-0.2M	NITTA MOORE	1	
10	74570235	Plastic Hose	P230222103	U2-4-6X4(Black)-1.5M	NITTA MOORE	3	
11	74418915	Cable TAP-10-6	6873431			1	
12	74418916	Cable TAP-10-5	6875569			1	
13	74418917	Pump Bracket	6875564			1	
14	79564804	Hex Soc Cap Screw	P330230006	M8X20		4	
15	74578034	Mist Spray Unit	7831542 A		LUBE	1	
16	10323205	Hex Soc Cap Screw	P330230001	M8X10		4	
17	74578038	Air Pressure Valve	P553002084	AR20-01BG-1	SMC	1	
18	79573416	Hex Soc Cap Screw	P330210003	M5X10		2	
19	36161080	Instant Fitting	P586623031	KQ2L06-01S	SMC	1	

Index	Code	Parts Name	Drawing No.	Type	Maker	Q'ty	Note
20	36161229	Instant Fitting	P586563202	KQ2L04-01S	SMC	1	
21	74570453	Air Directional Valve	P556002391	VT315-025DS	SMC	1	
22	86631339	Hex Soc Cap Screw	P330200022	M4X25		2	
23	74383602	Silencer	P557032005	AN200-02	SMC	1	
24	74718727	Instant Fitting	P586604002	EST6-PT1/4	NITTA MOORE	1	
25	10421366	Instant Fitting	P586564006	EL10-PT1/4	NITTA MOORE	1	
26	74570235	Plastic Hose	P230222138	U2-4-6X4(Black)-0.3M	NITTA MOORE	2	
27	74418918	Cable TAP-10-8	6875574			1	
28	74578037	Block Bracket	6873428			1	
29	75420815	Flange Socket Bolt	P330468001	M8X20	NISSAN NEJI	2	
30	74578036	Block	7831560		LUBE	1	
31	86620303	Hex Soc Cap Screw	P330200023	M4X30		2	
32	74418155	Solenoid Bracket	6873427			1	
33	75420815	Flange Socket Bolt	P330468001	M8X20	NISSAN NEJI	2	
34	74570453	Air Directional Valve	P556002391	VT315-025DS	SMC	1	
35	86620303	Hex Soc Cap Screw	P330200023	M4X30		2	
36	74383602	Silencer	P557032005	AN200-02	SMC	1	
37	10421366	Instant Fitting	P586564006	EL10-PT1/4	NITTA MOORE	2	
38	74418919	Cable S-46	6874944			1	

Index	Code	Parts Name	Drawing No.	Type	Maker	Q'ty	Note
39	74382882	Plastic Hose	P230242125	U2-4-10X6.5(Black)-6M	NITTA MOORE	1	
40	74379378	Instant Fitting	P586604013	EUT10	NITTA MOORE	1	
41	74568661	Cable Band	P381058101	TM3S25	KITAGAWA	3	
42	31183033	Hex Soc Cap Screw	P330220003	M6X10		3	
43	74568662	Cable Band	P381058102	PLT2S	KITAGAWA	3	
44	74418920	Cable S-45	6874943			1	
45	74570434	Cable (TAP-9-2)	6813836			1	
46	74418921	Cable TAP	6875566			1	
47	74418922	Cable TAP-11	6875578			1	
48	74418923	Cable TAP-10-1(CE)	6877951 A			1	Cut Tap,DT(for BF)
49	74418924	Cable TAP-10-2	6877952			1	Cut Tap,DT(for BF)
50	74570455	Vacuum Cleaner	7832975	AZ-280MSK-E	KOGANEI	1	Cut Tap,DT(for BF)
51	74418925	Pipe	6875565			1	Cut Tap,DT(for BF)
52	74379329	Piping Clamp	P381103012	MC75-1	NHK	3	Cut Tap,DT(for BF)
53	74562584	Bush For Cable	P229116020	RB75-30	NHK	3	Cut Tap,DT(for BF)
54	36115339	Hex Soc Cap Screw	P330230020	M8X90		6	Cut Tap,DT(for BF)
55	79567109	Washer	P336000006	8(Regular Round)		6	Cut Tap,DT(for BF)
56	74379177	Instant Fitting	P586534008	EC10-PT3/8	NITTA MOORE	1	Cut Tap,DT(for BF)
57	74382882	Plastic Hose	P230242127	U2-4-10X6.5(Black)-7M	NITTA MOORE	1	Cut Tap,DT(for BF)

Multi Tapping(5)

From Serial No.36102001 and after

Index	Code	Parts Name	Drawing No.	Type	Maker	Q'ty	Note
58	74567656	Quick Connect Joint	P589026020	30SF	NITTO KOHKI	1	Cut Tap,DT(for BF)
59	31169046	Quick Connect Joint	P589026015	30PM	NITTO KOHKI	1	Cut Tap,DT(for BF)

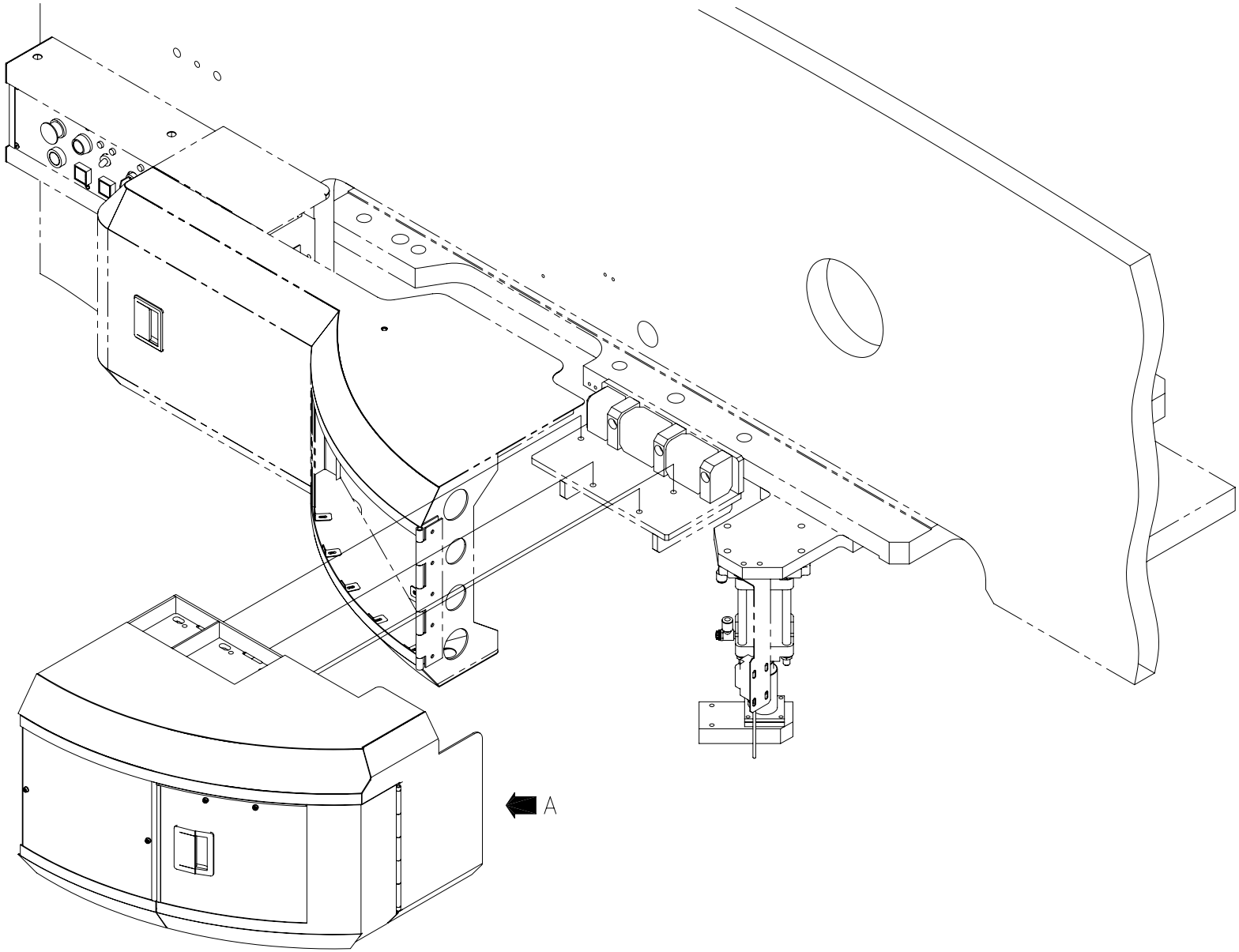

6878906

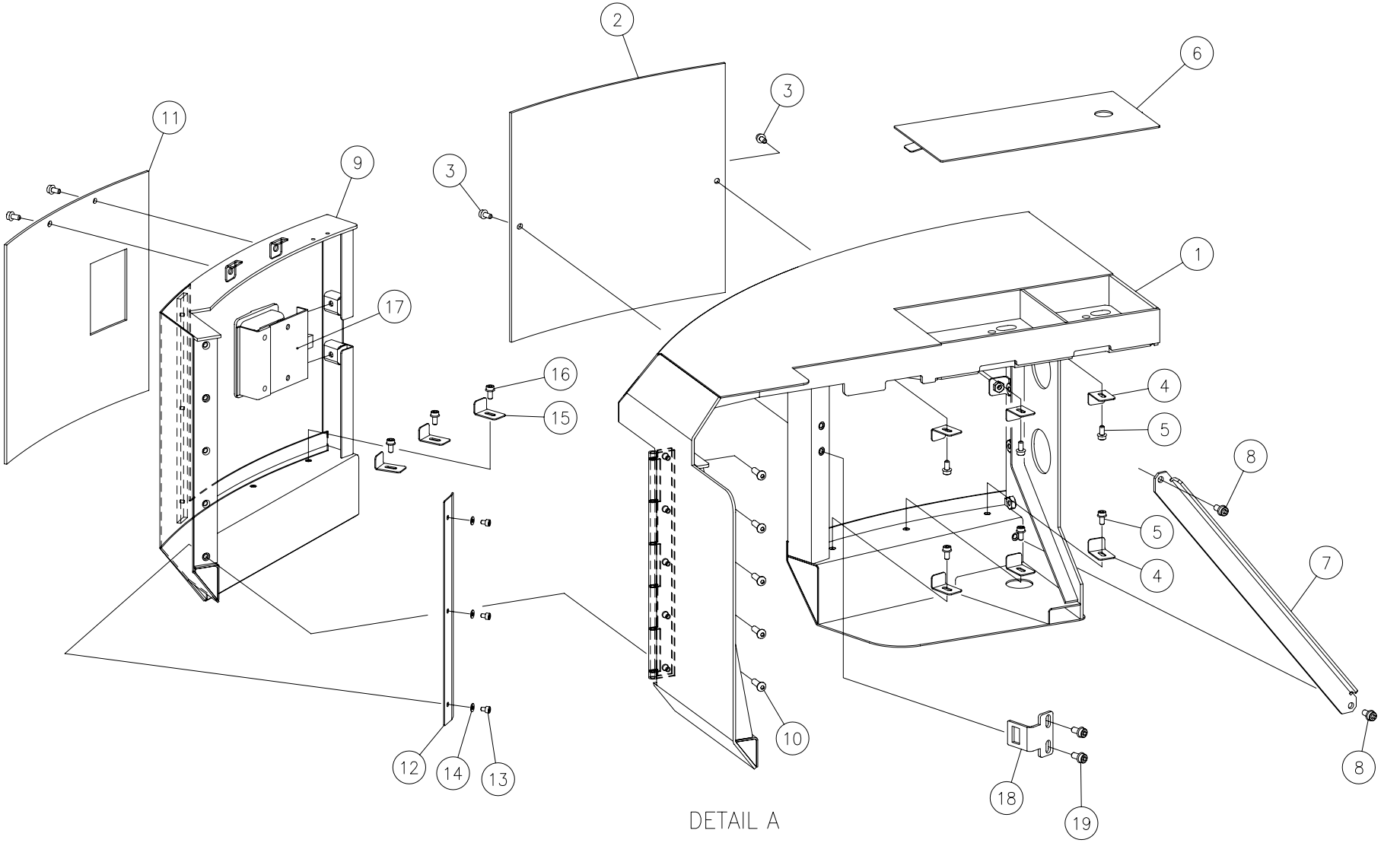
2
6
3
11
9
3
1
17
16
15
4
5
8
5
4
7
10
12
14
13
18
19
8
DETAIL A
6878906

Index	Code	Parts Name	Drawing No.	Type	Maker	Q'ty	Note
1	74419412	Turret Cover (Right)(M/T)	6878899			1	
2	74419413	Panel Cover M/T (1)	6878901			1	
3	74570510	Flange Socket Bolt	P330460006	M5X10		2	
4	74419419	Panel Cover Bracket (2)	6877986			6	
5	74570510	Flange Socket Bolt	P330460006	M5X10		6	
6	74419414	Upper Turret Cover	6877999			1	
7	74419415	Cover Rib	6878903			1	
8	74731367	Flange Socket Bolt	P330468026	M6X12	NISSAN NEJI	2	
9	74419416	M/T Door	6878900			1	
10	74183324	Flat Head Screw	P334110030	M6X20		5	
11	74419417	Panel Cover M/T (2)	6878902			1	
12	74419418	Panel Cover Bracket (1)	6877985			1	
13	36500428	Hex Soc Cap Screw	P330200013	M4X6		3	
14	71513636	Washer	P336000092	4(Regular Round)		3	
15	74419419	Panel Cover Bracket (2)	6877986			3	
16	74570510	Flange Socket Bolt	P330460006	M5X10		3	
17	74419420	Door Handle	P317012022	A-151R-2-2	TAKIGEN	1	
18	74419421	Latch (M/T)	6878896			1	
19	74731367	Flange Socket Bolt	P330468026	M6X12	NISSAN NEJI	2	

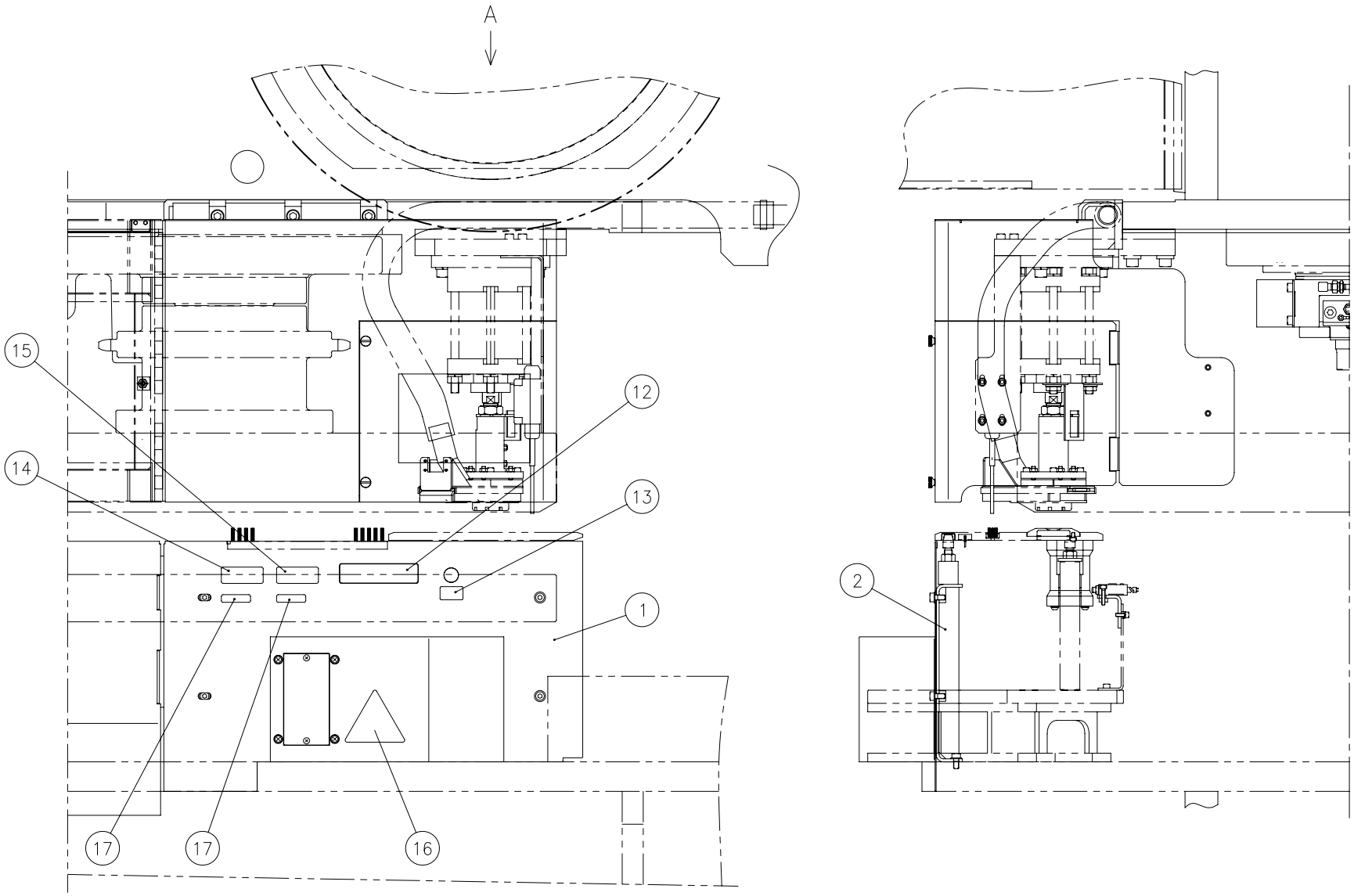

(6875557)

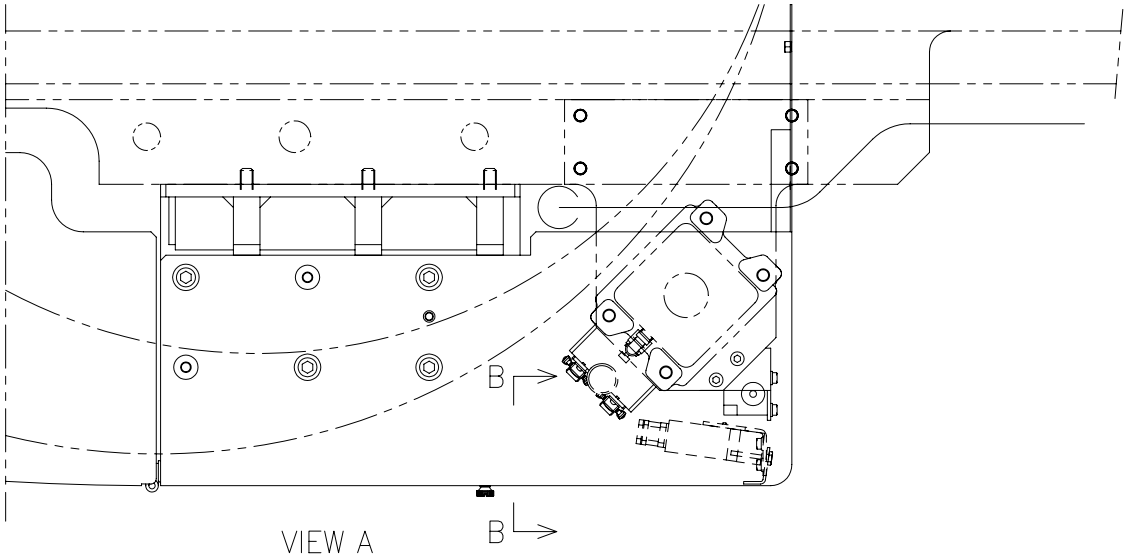

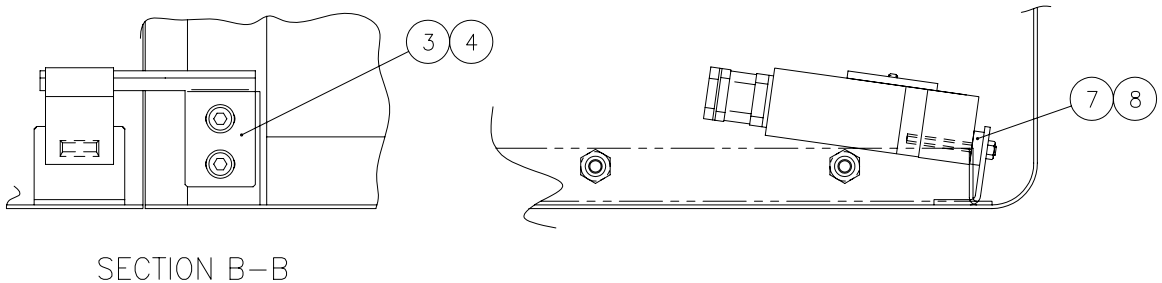

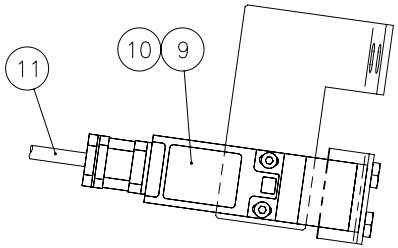

(6875557)

Index	Code	Parts Name	Drawing No.	Type	Maker	Q'ty	Note
1	74418927	Cover (F) MT	6875560			1	
2	74570466	Taper Pin Bracket	6821407			1	
3	74419422	LS Bracket (M/T)	6878893			1	
4	75428708	Flange Socket Bolt	P330468015	M6X10	NISSAN NEJI	2	
5	74419423	Key Bracket (M/T)	6878894			1	List Only
6	74570510	Flange Socket Bolt	P330460006	M5X10		2	List Only
7	74569526	Accessory For Limit Switch	P828108007	V-M20	MURA Electric	1	
8	74300824	Limit Switch	P828008001	AT0-11-1-ZB	MURA Electric	1	
9	76400229	Flat Head Bolt	P334520003	M4X12		2	
10	79570917	Hex Soc Cap Screw	P330200024	M4X35		2	
11	74418928	Cable S-14	6874942			1	
12	74567208	Legend Plate (Caution Tapping)	6516253			1	English
12	74570416	Legend Plate (Tap Caution) FRA	6822938			1	French
12	74570415	Legend Plate (Tap Caution) GER	6822937			1	German
12	74570413	Legend Plate (Tap Caution) ITA	6822936			1	Italian
12	74419424	Legend Plate (Caution Tapping)	6817862			1	Chinese
13	74578043	Legend Plate (Lubrication)	6817114			1	English
13	74578045	Legend Plate (Lubrication)	6817116			1	French
13	74578044	Legend Plate (Lubrication)	6817115			1	German

Index	Code	Parts Name	Drawing No.	Type	Maker	Q'ty	Note
13	74578046	Legend Plate (Lubrication)	6817117			1	Italian
13	74419425	Legend Plate (Lubrication)	6817863			1	Chinese
14	74569597	Legend Plate (U-axis Motor)	6822267			1	for EU,EXP
14	74419426	Legend Plate (U-axis Motor)	6817864			1	Chinese
15	74569598	Legend Plate (V-axis Motor)	6822268			1	for EU,EXP
15	74419427	Legend Plate (V-axis Motor)	6817865			1	Chinese
16	74379098	Charging Mark	P360200003	JISB6015-80H		2	
17	74382540	Sticker		AS-K1001-C		2	
18	74386340	Legend Plate (Pneumatic)	6045138 A			1	except Chinese (List Only)
18	74419461	Legend Plate (Pneumatic)	6817500			1	Chinese (List Only)

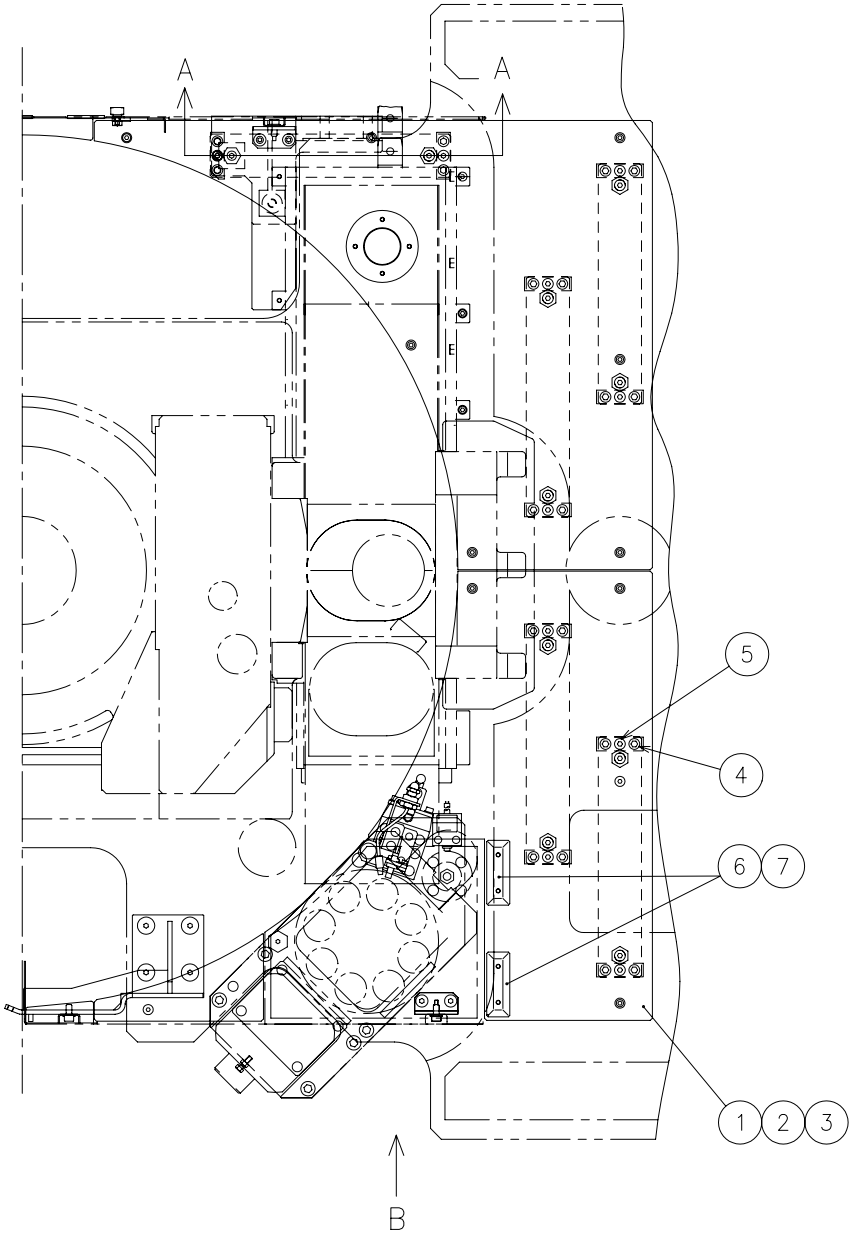

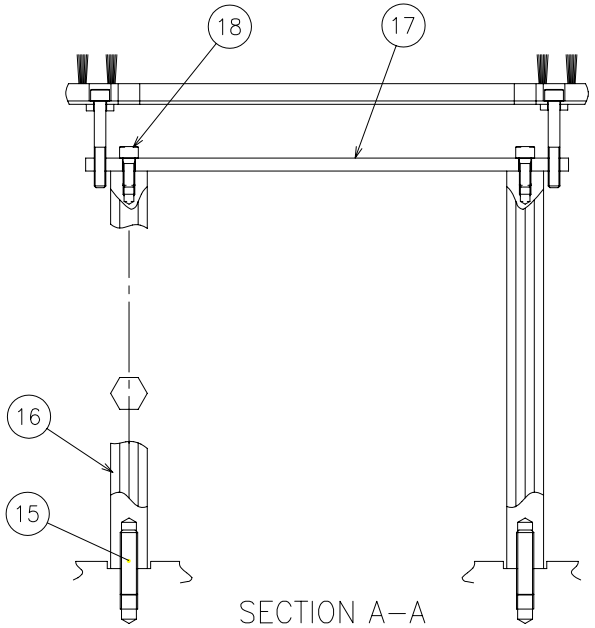

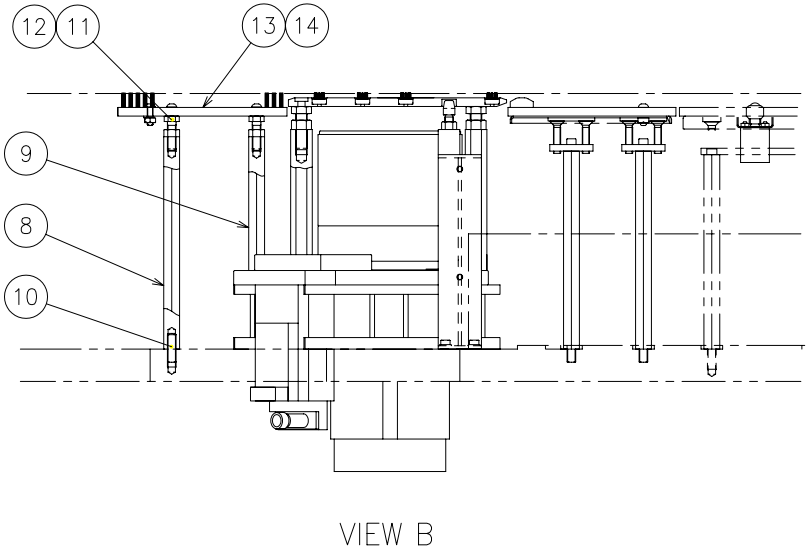

6872500A

Index	Code	Parts Name	Drawing No.	Type	Maker	Q'ty	Note
1	74419155	Repositioning Brush Base (F)	6873727 A			1	
2	74419156	MDF Brush (Repositioning F)M/T	6873728			1	
3	74722756	Button Head Screw	P334500021	M8X25		5	
4	74732198	Flat Head Bolt	P334520050	M10X45		8	
5	36335242	Hex Soc Cap Screw	P330230014	M8X60		4	
6	74570351	Support Plate (MT)	6592190			2	
7	79565422	Hex Soc Cap Screw	P330220011	M6X25		4	
8	74570349	Stud (MT1)	6821394	H22		1	
9	74570350	Stud (MT3)	6821403	H22		1	
10	74388378	Socket Set Screw	P330550065	M12X40(Flat-end)		2	
11	74570348	Adjustable Bolt	6813254			2	
12	31183535	Nut	P332000007	M12		2	
13	74571444	MDF Brush (MT1)	6821877 A			1	
14	74722756	Button Head Screw	P334500021	M8X25		2	
15	74386882	Socket Set Screw	P330550118	M12X45(Flat-end)		2	
16	74417382	Stud (Table Base)	6873284			2	
17	74417383	Repositioning Table Base	6873277			1	
18	79564804	Hex Soc Cap Screw	P330230006	M8X20		2	

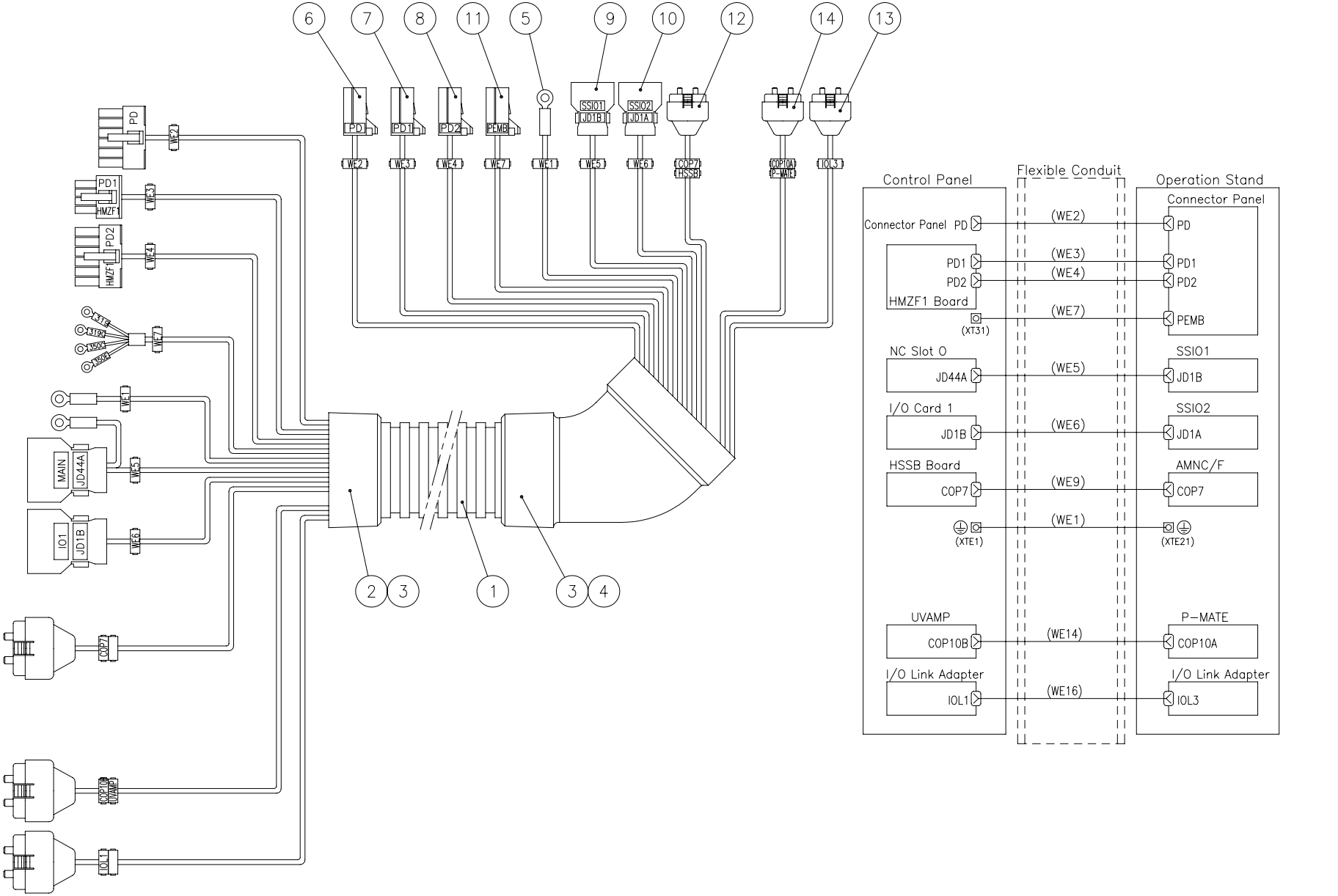
Control Panel
Flexible Conduit
Operation Stand
Connector Panel
Connector Panel PD
PD1
PD2
HMZF1 Board
(XT31)
NC Slot O
JD44A
I/O Card 1
JD1B
HSSB Board
COP7
(XTE1)
UVAMP
COP10B
I/O Link Adapter
IOL1
(WE2)
(WE3)
(WE4)
(WE7)
(WE5)
(WE6)
(WE9)
(WE1)
(WE14)
(WE16)
PD
SSIO1
SSIO2
AMNC/F
(XTE21)
P-MATE
COP10A
IOL3
MAIN
IO1
6701049

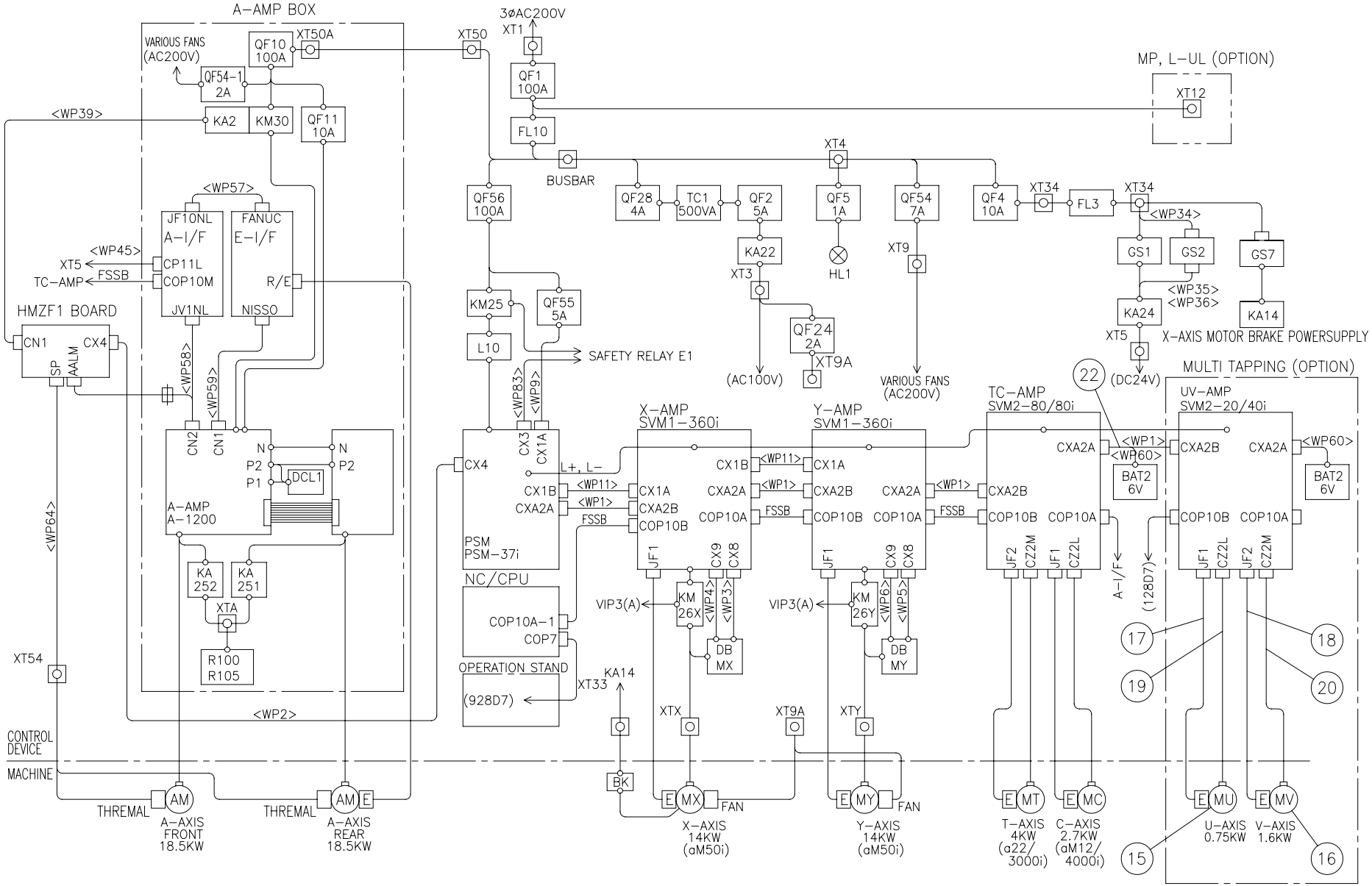
A-AMP BOX
VARIOUS FANS (AC200V)
QF10 100A
XT50A
XT50
QF54-1 2A
KA2
KM30
QF11 10A
<WP39>
<WP57>
JF10NL
A-I/F
FANUC
E-I/F
<WP45>
XT5
FSSB
TC-AMP
CP11L
COP10M
R/E
JV1NL
NISSO
HMZF1 BOARD
CN1
CX4
SP
AALM
<WP58>
<WP59>
CN2
CN1
N
P2
P1
DCL1
A-AMP A-1200
KA 252
KA 251
XTA
R100 R105
XT54
<WP64>
<WP2>
CONTROL DEVICE
MACHINE
THREMAL
AM
A-AXIS FRONT 18.5KW
THREMAL
AM
E
A-AXIS REAR 18.5KW
3ØAC200V
XT1
QF1 100A
FL10
BUSBAR
QF56 100A
KM25
L10
QF55 5A
SAFETY RELAY E1
<WP83>
<WP9>
CX3
CX1A
CX4
L+, L-
PSM PSM-37i
NC/CPU
COP10A-1
COP7
OPERATION STAND
(928D7)
XT33
KA14
BK
MP, L-UL (OPTION)
XT12
XT4
QF28 4A
TC1 500VA
QF2 5A
QF5 1A
QF54 7A
QF4 10A
XT34
FL3
<WP34>
KA22
XT3
HL1
XT9
QF24 2A
XT9A
(AC100V)
VARIOUS FANS (AC200V)
GS1
GS2
GS7
<WP35>
<WP36>
KA24
KA14
XT5
X-AXIS MOTOR BRAKE POWERSUPPLY
22
(DC24V)
MULTI TAPPING (OPTION)
X-AMP SVM1-360i
CX1B
CXA2A
<WP11>
<WP1>
FSSB
CX1A
CXA2B
COP10B
COP10A
JF1
CX9
CX8
VIP3(A)
KM 26X
<WP4>
<WP3>
DB MX
XTX
MX
FAN
X-AXIS 14KW (αM50i)
Y-AMP SVM1-360i
KM 26Y
<WP6>
<WP5>
DB MY
XT9A
XTY
MY
Y-AXIS 14KW (αM50i)
TC-AMP SVM2-80/80i
<WP60>
BAT2 6V
JF2
CZ2M
CZ2L
A-I/F
(128D7)
MT
MC
T-AXIS 4KW (α22/ 3000i)
C-AXIS 2.7KW (αM12/ 4000i)
UV-AMP SVM2-20/40i
MU
MV
U-AXIS 0.75KW
V-AXIS 1.6KW
17
18
19
20
15
16

670779127

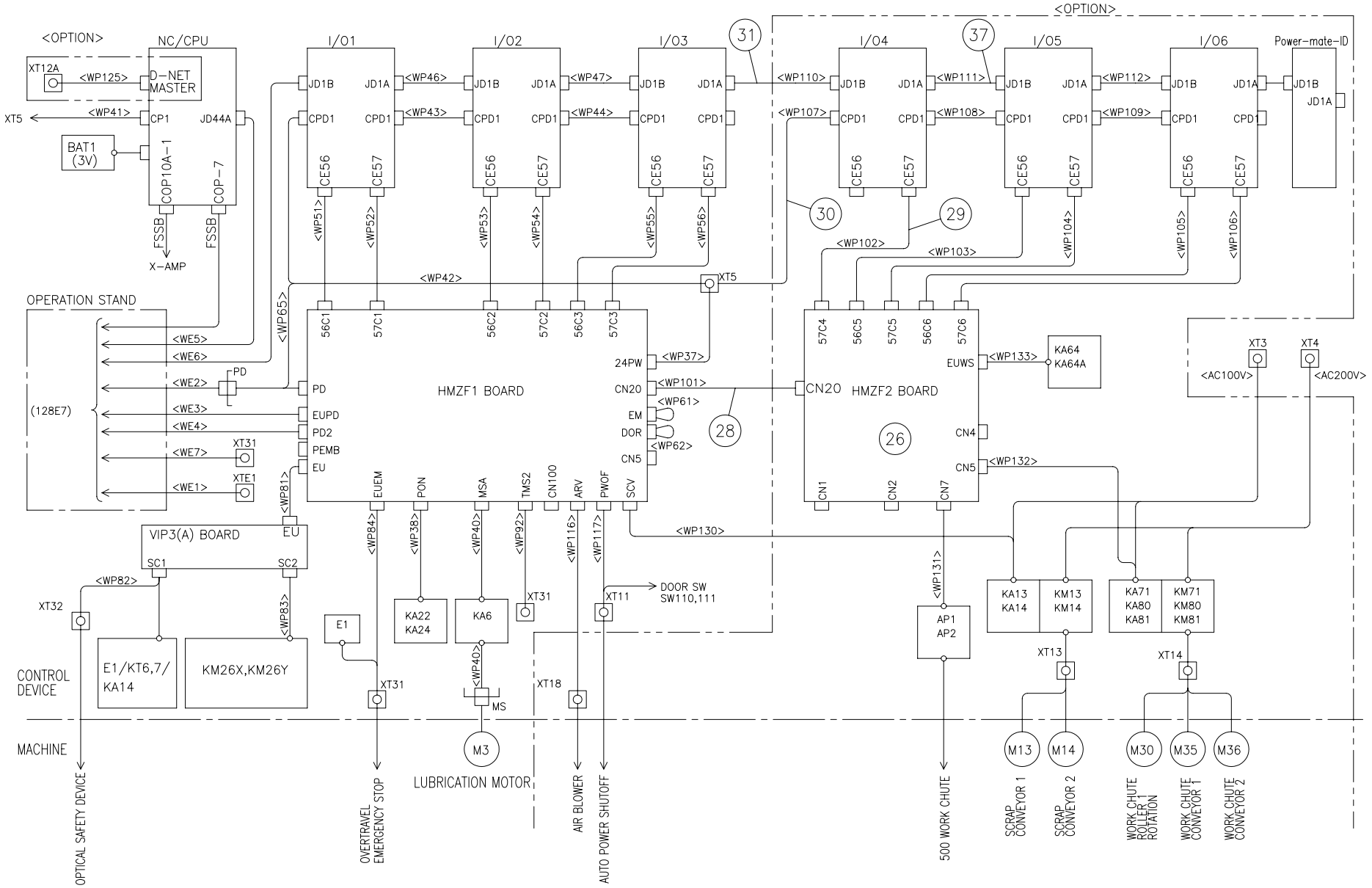
<OPTION>
NC/CPU
XT12A
<WP125>
D-NET MASTER
XT5
<WP41>
CP1
JD44A
BAT1 (3V)
COP10A-1
COP-7
FSSB
X-AMP
I/01
I/02
I/03
I/04
I/05
I/06
Power-mate-ID
JD1B
JD1A
CPD1
CE56
CE57
<WP46>
<WP47>
<WP43>
<WP44>
<WP110>
<WP111>
<WP112>
<WP107>
<WP108>
<WP109>
<WP51>
<WP52>
<WP53>
<WP54>
<WP55>
<WP56>
<WP102>
<WP103>
<WP104>
<WP105>
<WP106>
<WP42>
<WP65>
OPERATION STAND
(128E7)
<WE5>
<WE6>
<WE2>
<WE3>
<WE4>
<WE7>
<WE1>
PD
XT31
XTE1
HMZF1 BOARD
56C1
57C1
56C2
57C2
56C3
57C3
24PW
CN20
EM
DOR
CN5
<WP37>
<WP101>
<WP61>
<WP62>
EUPD
PD2
PEMB
EU
<WP81>
EUEM
PON
MSA
TMS2
CN100
ARV
PWOF
SCV
HMZF2 BOARD
57C4
56C5
57C5
56C6
57C6
EUWS
<WP133>
KA64
KA64A
CN4
CN5
<WP132>
CN1
CN2
CN7
XT3
XT4
<AC100V>
<AC200V>
VIP3(A) BOARD
SC1
SC2
<WP82>
<WP83>
XT32
E1/KT6,7/KA14
KM26X,KM26Y
CONTROL DEVICE
MACHINE
<WP84>
<WP38>
<WP40>
<WP92>
<WP116>
<WP117>
<WP130>
<WP131>
E1
KA22
KA24
KA6
MS
M3
LUBRICATION MOTOR
XT18
XT11
DOOR SW
SW110,111
AP1
AP2
KA13
KA14
KM13
KM14
KA71
KA80
KA81
KM71
KM80
KM81
XT13
XT14
M13
M14
M30
M35
M36
OPTICAL SAFETY DEVICE
OVERTRAVEL EMERGENCY STOP
AIR BLOWER
AUTO POWER SHUTOFF
500 WORK CHUTE
SCRAP CONVEYOR 1
SCRAP CONVEYOR 2
WORK CHUTE ROLLER 1 ROTATION
WORK CHUTE CONVEYOR 1
WORK CHUTE CONVEYOR 2
31
37
30
29
28
26
670779126

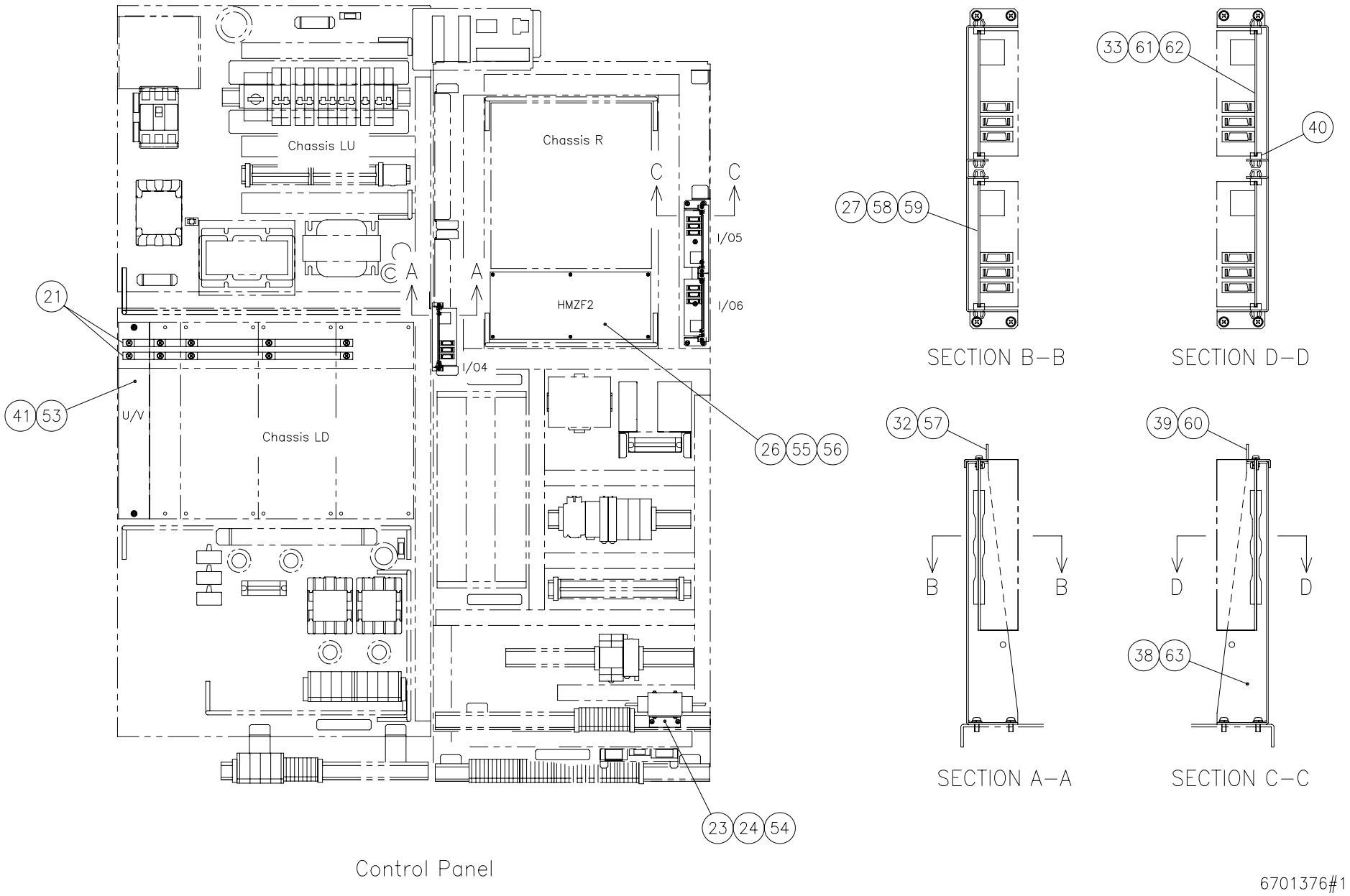
Chassis LU
Chassis R
Chassis LD
HMZF2
U/V
I/04
I/05
I/06
A
C
21
41 53
26 55 56
23 24 54
27 58 59
33 61 62
40
32 57
39 60
38 63
B
D
SECTION B–B
SECTION D–D
SECTION A–A
SECTION C–C
Control Panel
6701376#1

Index	Code	Parts Name	Drawing No.	Type	Maker	Q'ty	Note
1	74417777	Flexible Conduit	P869013025	SR-12-7.5M	NIPOLEX	1	
2	36540135	Accessory For Conduit	P866008046	RBC-112	NIPOLEX	1	
3	74417779	Accessory For Conduit	P866088037	ZVO-42	MIRAI Industries	2	
4	74417780	Accessory For Conduit	P866008060	RBC-212	NIPOLEX	1	
5	74419428	Cable (WE1)	670513701			1	
6	74416359	Cable (WE2)	670526007			1	
7	74417782	Cable (WE3)	670526012			1	
8	74575133	Cable (WE4)	670312821			1	
9	74419429	Cable (WE5)	670513702			1	
10	74417784	Cable (WE6)	670246033A			1	
11	74419430	Cable (WE7)	670513703			1	
12	74417786	Cable (WE9)	670526014			1	
13	74418931	Cable (WE16)	670526021			1	
14	74418932	Cable (WE14)	670526019			1	
15	74572095	Servo Motor	P714018175	A06B-0205-B000	FANUC	1	MU
16	74572096	Servo Motor	P714018176	A06B-0227-B000	FANUC	1	MV
17	74419434	U Signal Cable (JF1(U))	670838209A			1	
18	74419435	V Signal Cable (JF2(V))	670838210A			1	
19	74419436	U Motor Cable (U)	670838211A			1	

Index	Code	Parts Name	Drawing No.	Type	Maker	Q'ty	Note
20	74419437	V Motor Cable (V)	670838212A			1	
21	74418020	Short Bar 2 (EMF)	6705234			2	
22	74418935	WP1	670285201			1	
23	74418949	Cable (WLK1)	670526023			1	
24	74418943	Link Adapter Bracket	6705263			1	
25	74418950	WP129	670285329			1	List Only
26	74577622	HMZF2 Board	6702384 A	B6201C-HMZF2-000		1	
27	71369424	Accessory (Program Controller)	P767485288	A20B-2002-0521	FANUC	1	IO4
28	74418951	WP101	670285301			1	
29	74418936	WP102	670285302			1	
30	74418937	WP107	670285307			1	
31	74418952	WP110	670285310			1	
32	74416178	Stay (for I/O)	6702652 B			1	
33	71369424	Accessory (Program Controller)	P767485288	A20B-2002-0521	FANUC	1	IO5OR6
34	74418953	WP126	670285326			1	List Only
35	74418954	WP127	670285327			1	List Only
36	74418938	WP128	670285328			1	List Only
37	74418939	WP111	670285311			1	
38	74416177	I/O Bracket	6702651			1	

Index	Code	Parts Name	Drawing No.	Type	Maker	Q'ty	Note
39	74416178	Stay (for I/O)	6702652 B			1	
40	74417687	Stay For Board	P870078003	G-1070	NICS	2	
41	74572097	Servo Amplifier	P767108086	A02B-6114-H206	FANUC	1	UV
42	74418023	Accessory (Program Controller)	P767485225	A02B-0259-B501	FANUC	1	List Only
43	74418024	Accessory (Program Controller)	P767485226	A02B-0259-H002	FANUC	1	List Only
44	74418025	Accessory (Program Controller)	P767485227	A02B-0259-H011	FANUC	1	List Only
45	74418026	Accessory (Program Controller)	P767485228	A02B-0259-H032	FANUC	1	List Only
46	74418027	Accessory (Program Controller)	P767485229	A02B-0259-H062	FANUC	1	List Only
47	74418049	Accessory (Program Controller)	P767485233	A02B-0259-J199	FANUC	2	List Only
48	74418050	Accessory (Program Controller)	P767485230	A02B-0259-H501#B8E0	FANUC	1	List Only
49	74418955	Accessory (Program Controller)	P767485480	A02B-0259-H590#9096	FANUC	1	List Only
50	74418051	Accessory (Program Controller)	P767485231	A02B-0259-H580#407B	FANUC	1	List Only
51	74418029	Accessory (Program Controller)	P767485234	A02B-0259-J583#407B	FANUC	1	List Only
52	74572845	Optical Link Adapter	P767485005	A13B-0154-B001	FANUC	2	Accessory (List Only)
53	71516385	Optical Fiber Cable	P345008013	A66L-6001-0026#L15R03	FANUC	2	
54	74577588	Pan Head Screw with Washer	P334200182	M3X8(Chromate P-3)		2	
55	74575020	Pan Head Screw with Washer	P334200144	M3X6(Chromate P-4)		5	
56	74417688	Pan Head Screw with Washer	P334200173	M3X6(NickelP-4)		1	
57	74577588	Pan Head Screw with Washer	P334200182	M3X8(Chromate P-3)		2	

Index	Code	Parts Name	Drawing No.	Type	Maker	Q'ty	Note
58	74417688	Pan Head Screw with Washer	P334200173	M3X6(NickelP-4)		1	
59	74575020	Pan Head Screw with Washer	P334200144	M3X6(Chromate P-4)		2	
60	74577588	Pan Head Screw with Washer	P334200182	M3X8(Chromate P-3)		2	
61	74417688	Pan Head Screw with Washer	P334200173	M3X6(NickelP-4)		1	
62	74575020	Pan Head Screw with Washer	P334200144	M3X6(Chromate P-4)		2	
63	74577525	Pan Head Screw with Washer	P334200183	M4X10(Chromate P-3)		6	
64	74418956	Power Mate Bracket	6705288 B			1	List Only
65	74418940	Cable (CP1)	670504801			1	List Only
66	74418957	Cable (CB155)	670504802			1	List Only
67	74418941	Cable (PEMBMT)	670504803			1	List Only
68	74418958	Cable (EMGMT)	670504804			1	List Only
69	74418942	Cable (J142)	670504805			1	List Only
70	74418959	Cable (WLK3)	670526025			1	List Only
71	74418943	Link Adapter Bracket	6705263			1	List Only
72	71516397	Cable Clamp	P767485035	A02B-0124-K001	FANUC	1	Accessory (List Only)
73	74418054	Fuse	P842068012	A02B-0124-K101	FANUC	5	Accessory (List Only)
74	74418944	Control Panel	P880008002	A02B-0211-C050#S	FANUC	1	Accessory (List Only)
75		Mannual	P767485511	B-63175EN	FANUC	1	Accessory (List Only)
76	71367146	Battery	P379828002	A02B-0200-K102	FANUC	1	Accessory (List Only)

Index	Code	Parts Name	Drawing No.	Type	Maker	Q'ty	Note
77	74418055	Memory Card	P379038010	CFC-016MBA	HAGIWARA	1	Accessory (List Only)
78	74418032	Memory Card Adapter	P379868002	CFC-ADP02	HAGIWARA	1	Accessory (List Only)

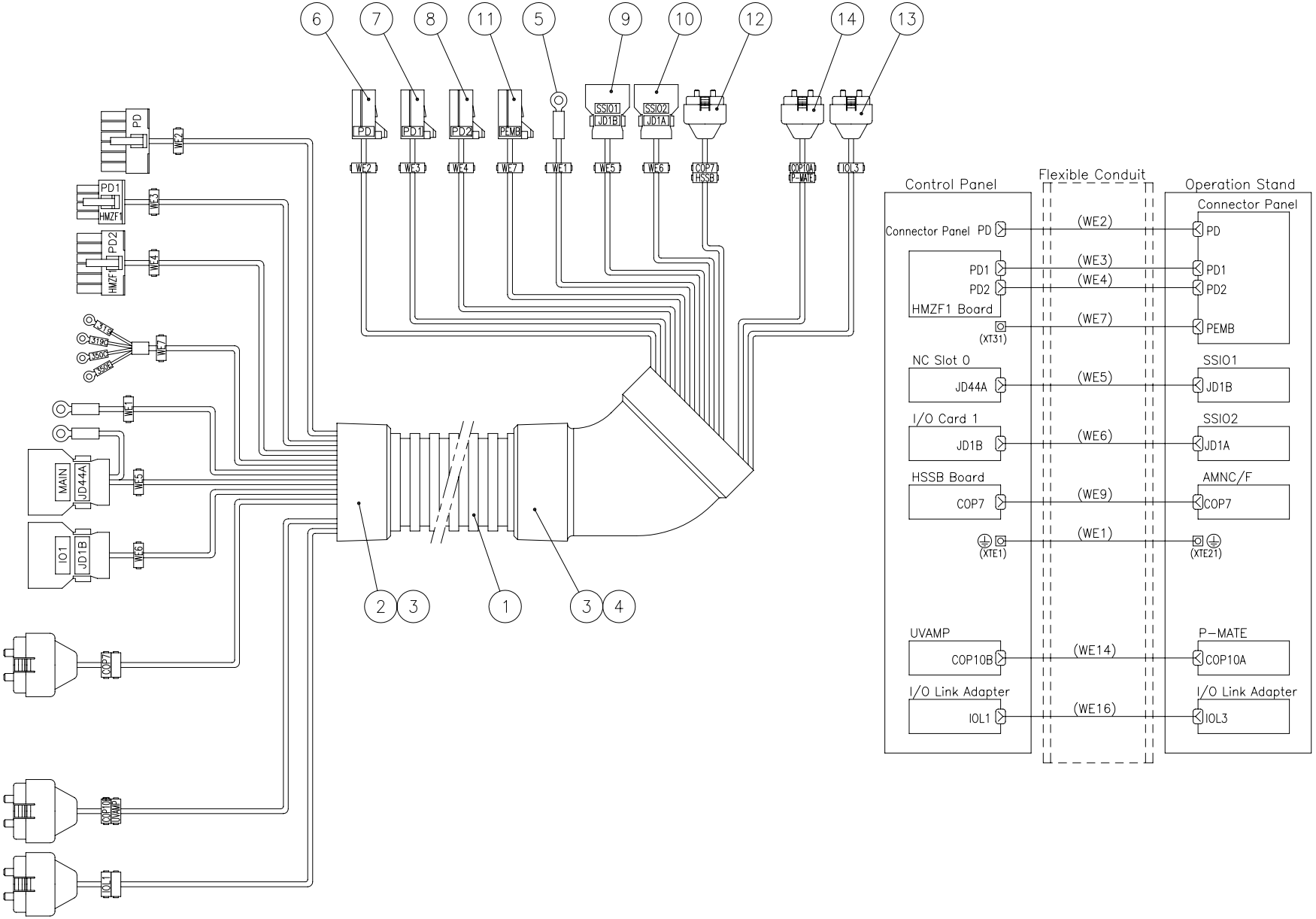
6
7
8
11
5
9
10
12
14
13
PD
PD1
PD2
PEMB
SSIO1
JD1B
SSIO2
JD1A
COP7
HSSB
COP10A
P-MATE
IOL3
WE2
WE3
WE4
WE7
WE1
WE5
WE6
HMZF1
XT31
XTE1
XTE21
MAIN
JD44A
IO1
COP10B
UVAMP
IOL1
2
3
1
3
4
Control Panel
Flexible Conduit
Operation Stand
Connector Panel
Connector Panel PD
(WE2)
PD1
PD2
HMZF1 Board
(WE3)
(WE4)
(WE7)
(XT31)
PEMB
NC Slot 0
JD44A
(WE5)
SSIO1
JD1B
I/O Card 1
JD1B
(WE6)
SSIO2
JD1A
HSSB Board
COP7
(WE9)
AMNC/F
COP7
(WE1)
(XTE1)
(XTE21)
UVAMP
COP10B
(WE14)
P-MATE
COP10A
I/O Link Adapter
IOL1
(WE16)
I/O Link Adapter
IOL3

6701379

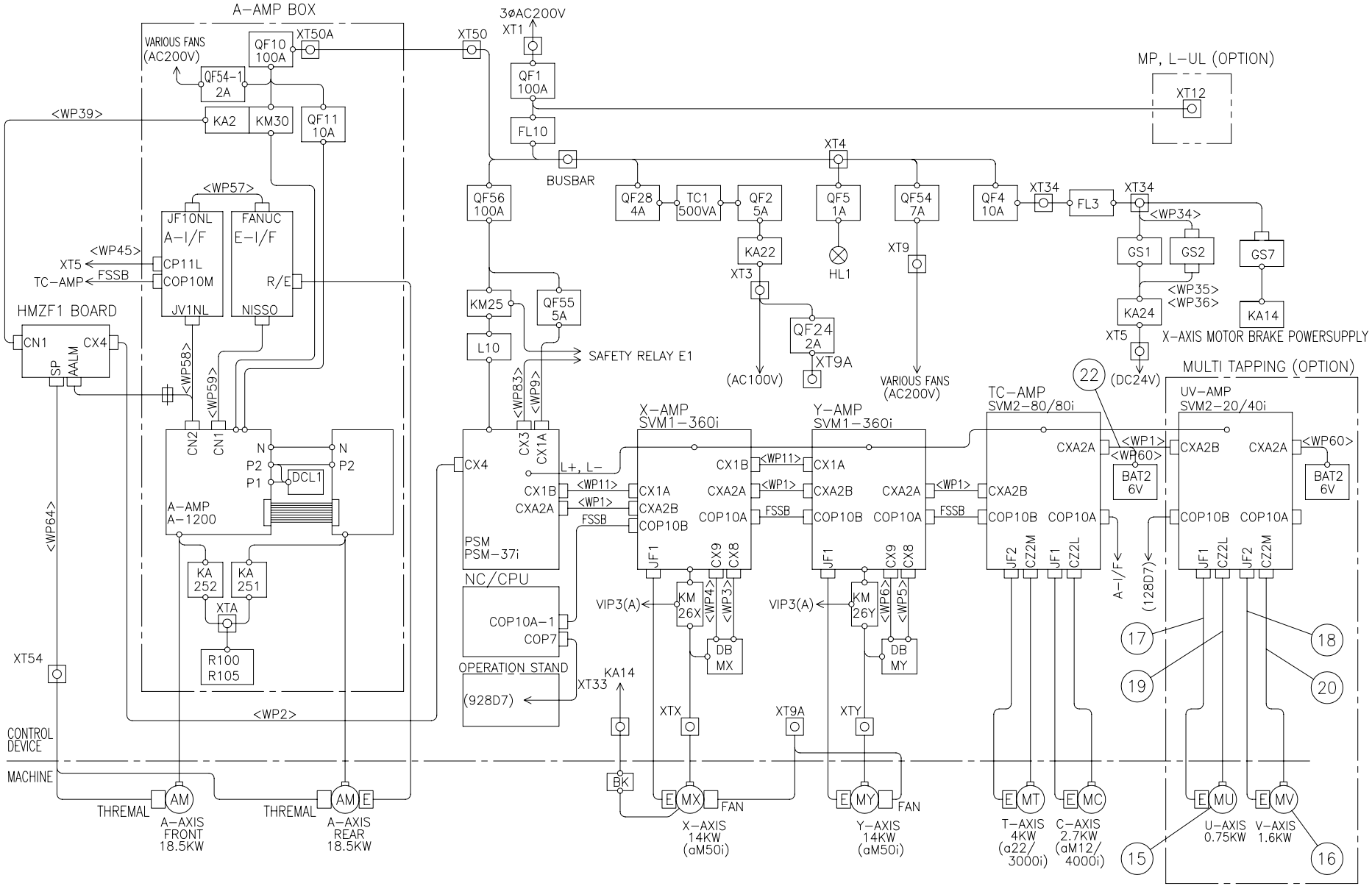
A-AMP BOX
VARIOUS FANS (AC200V)
QF10 100A
XT50A
XT50
QF54-1 2A
KA2
KM30
QF11 10A
<WP39>
<WP57>
JF10NL
A-I/F
FANUC
E-I/F
<WP45>
XT5
CP11L
TC-AMP
FSSB
COP10M
R/E
JV1NL
NISSO
HMZF1 BOARD
CN1
CX4
SP
AALM
<WP58>
<WP59>
CN2
CN1
N
P2
P1
DCL1
A-AMP A-1200
KA 252
KA 251
XTA
R100 R105
XT54
<WP64>
<WP2>
CONTROL DEVICE
MACHINE
THREMAL
AM
A-AXIS FRONT 18.5KW
THREMAL
AM
E
A-AXIS REAR 18.5KW
3ØAC200V
XT1
QF1 100A
FL10
BUSBAR
QF56 100A
KM25
L10
QF55 5A
SAFETY RELAY E1
<WP83>
<WP9>
CX3
CX1A
CX4
L+, L-
PSM PSM-37i
NC/CPU
COP10A-1
COP7
OPERATION STAND
(928D7)
XT33
KA14
BK
MP, L-UL (OPTION)
XT12
XT4
QF28 4A
TC1 500VA
QF2 5A
QF5 1A
QF54 7A
QF4 10A
XT34
FL3
<WP34>
KA22
XT3
HL1
XT9
QF24 2A
XT9A
(AC100V)
VARIOUS FANS (AC200V)
GS1
GS2
GS7
<WP35>
<WP36>
KA24
KA14
XT5
X-AXIS MOTOR BRAKE POWERSUPPLY
22
(DC24V)
MULTI TAPPING (OPTION)
X-AMP SVM1-360i
CX1B
CXA2A
<WP11>
<WP1>
CX1A
CXA2B
COP10B
COP10A
FSSB
JF1
CX9
CX8
VIP3(A)
KM 26X
<WP4>
<WP3>
DB MX
XTX
Y-AMP SVM1-360i
KM 26Y
<WP6>
<WP5>
DB MY
XTY
TC-AMP SVM2-80/80i
JF2
CZ2M
CZ2L
A-I/F
(128D7)
UV-AMP SVM2-20/40i
<WP60>
BAT2 6V
17
18
19
20
15
16
E
MX
FAN
X-AXIS 14KW (αM50i)
MY
Y-AXIS 14KW (αM50i)
MT
T-AXIS 4KW (α22/ 3000i)
MC
C-AXIS 2.7KW (αM12/ 4000i)
MU
U-AXIS 0.75KW
MV
V-AXIS 1.6KW

670779127

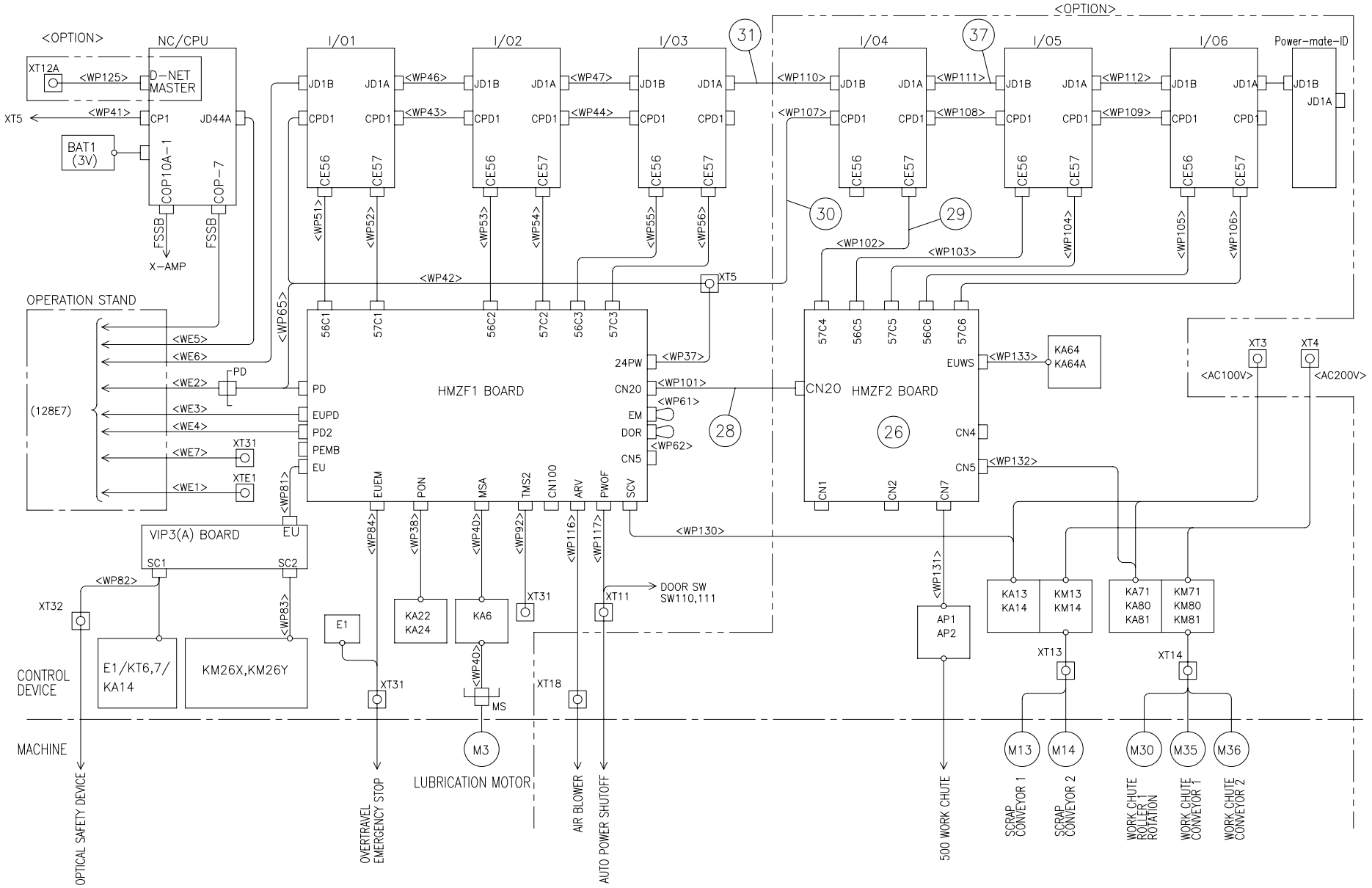
<OPTION>
NC/CPU
XT12A
<WP125>
D-NET MASTER
XT5
<WP41>
CP1
JD44A
BAT1 (3V)
COP10A-1
COP-7
FSSB
X-AMP
I/01
I/02
I/03
I/04
I/05
I/06
Power-mate-ID
JD1B
JD1A
CPD1
CE56
CE57
<WP46>
<WP47>
<WP43>
<WP44>
<WP110>
<WP111>
<WP112>
<WP107>
<WP108>
<WP109>
<WP51>
<WP52>
<WP53>
<WP54>
<WP55>
<WP56>
<WP102>
<WP103>
<WP104>
<WP105>
<WP106>
<WP42>
<WP65>
OPERATION STAND
(128E7)
<WE5>
<WE6>
<WE2>
<WE3>
<WE4>
<WE7>
<WE1>
PD
XT31
XTE1
HMZF1 BOARD
56C1
57C1
56C2
57C2
56C3
57C3
24PW
CN20
EM
DOR
CN5
<WP37>
<WP101>
<WP61>
<WP62>
EUPD
PD2
PEMB
EU
<WP81>
EUEM
PON
MSA
TMS2
CN100
ARV
PWOF
SCV
HMZF2 BOARD
57C4
56C5
57C5
56C6
57C6
EUWS
<WP133>
KA64
KA64A
CN4
<WP132>
CN1
CN2
CN7
XT3
XT4
<AC100V>
<AC200V>
VIP3(A) BOARD
SC1
SC2
<WP82>
<WP83>
XT32
E1/KT6,7/KA14
KM26X,KM26Y
CONTROL DEVICE
MACHINE
E1
<WP84>
<WP38>
<WP40>
<WP92>
<WP116>
<WP117>
<WP130>
<WP131>
KA22
KA24
KA6
MS
M3
LUBRICATION MOTOR
XT18
DOOR SW
SW110,111
AP1
AP2
KA13
KA14
KM13
KM14
KA71
KA80
KA81
KM71
KM80
KM81
XT13
XT14
M13
M14
M30
M35
M36
OPTICAL SAFETY DEVICE
OVERTRAVEL EMERGENCY STOP
AIR BLOWER
AUTO POWER SHUTOFF
500 WORK CHUTE
SCRAP CONVEYOR 1
SCRAP CONVEYOR 2
WORK CHUTE ROLLER 1 ROTATION
WORK CHUTE CONVEYOR 1
WORK CHUTE CONVEYOR 2
31
37
30
29
28
26
670779126

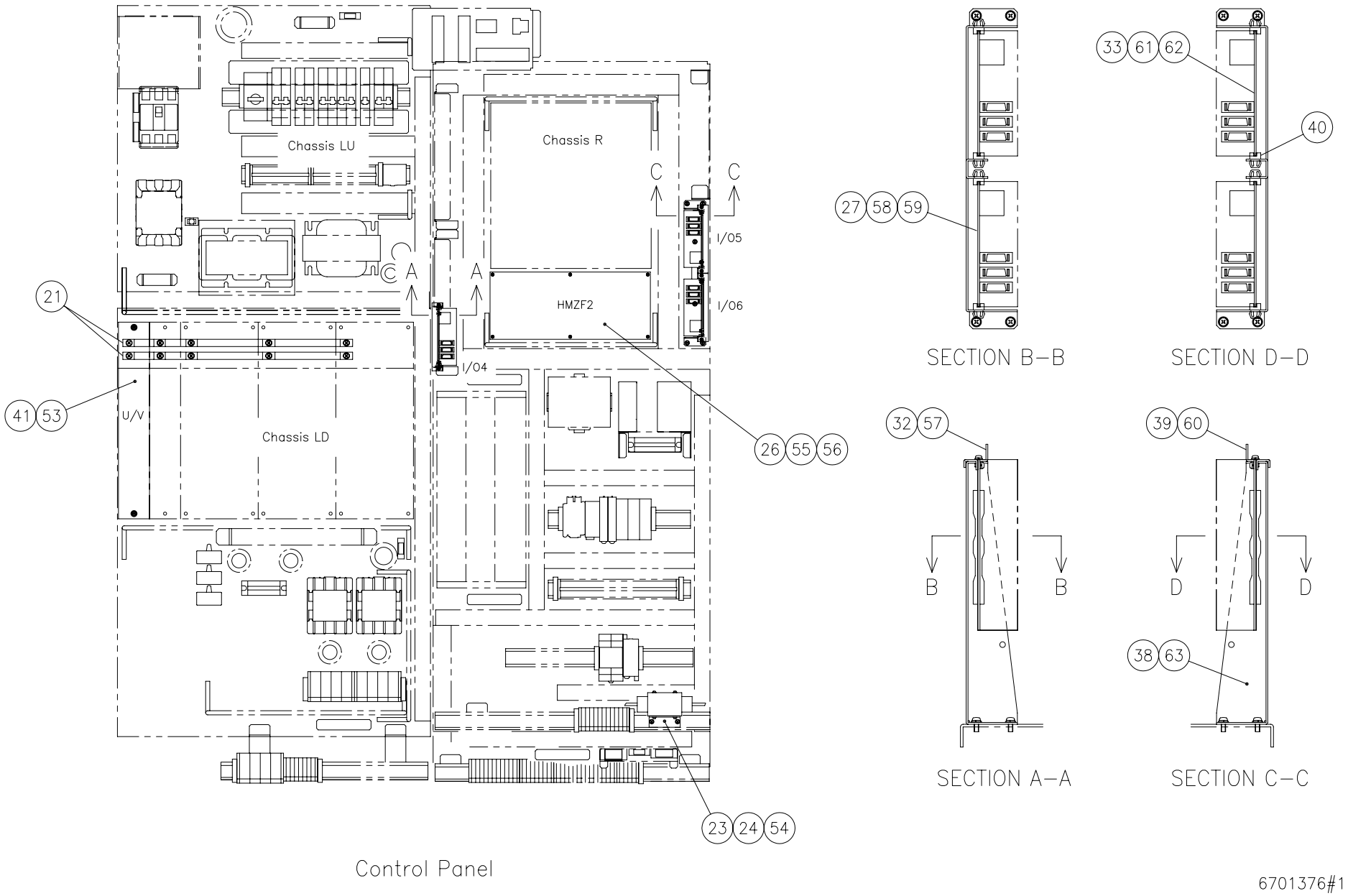
Chassis LU
Chassis R
Chassis LD
HMZF2
U/V
I/04
I/05
I/06
A
C
21
41 53
26 55 56
23 24 54
27 58 59
33 61 62
40
32 57
39 60
38 63
B
D
SECTION B–B
SECTION D–D
SECTION A–A
SECTION C–C
Control Panel
6701376#1

Index	Code	Parts Name	Drawing No.	Type	Maker	Q'ty	Note
1	74417778	Flexible Conduit	P869013026	SR-12-12.5M	NIPOLEX	1	
2	36540135	Accessory For Conduit	P866008046	RBC-112	NIPOLEX	1	
3	74417779	Accessory For Conduit	P866088037	ZVO-42	MIRAI Industries	2	
4	74417780	Accessory For Conduit	P866008060	RBC-212	NIPOLEX	1	
5	74419431	Cable (WE1)	670513704			1	
6	74417781	Cable (WE2)	670526008			1	
7	74417783	Cable (WE3)	670526013			1	
8	74575134	Cable (WE4)	670617226			1	
9	74419432	Cable (WE5)	670513705			1	
10	74417785	Cable (WE6)	670617228A			1	
11	74419433	Cable (WE7)	670513706			1	
12	74417787	Cable (WE10)	670526015			1	
13	74418945	Cable (WE17)	670526022			1	
14	74418946	Cable (WE15)	670526020			1	
15	74572095	Servo Motor	P714018175	A06B-0205-B000	FANUC	1	MU
16	74572096	Servo Motor	P714018176	A06B-0227-B000	FANUC	1	MV
17	74419434	U Signal Cable (JF1(U))	670838209A			1	
18	74419435	V Signal Cable (JF2(V))	670838210A			1	
19	74419436	U Motor Cable (U)	670838211A			1	

Index	Code	Parts Name	Drawing No.	Type	Maker	Q'ty	Note
20	74419437	V Motor Cable (V)	670838212A			1	
21	74418020	Short Bar 2 (EMF)	6705234			2	
22	74418935	WP1	670285201			1	
23	74418949	Cable (WLK1)	670526023			1	
24	74418943	Link Adapter Bracket	6705263			1	
25	74418950	WP129	670285329			1	List Only
26	74577622	HMZF2 Board	6702384 A	B6201C-HMZF2-000		1	
27	71369424	Accessory (Program Controller)	P767485288	A20B-2002-0521	FANUC	1	IO4
28	74418951	WP101	670285301			1	
29	74418936	WP102	670285302			1	
30	74418937	WP107	670285307			1	
31	74418952	WP110	670285310			1	
32	74416178	Stay (for I/O)	6702652 B			1	
33	71369424	Accessory (Program Controller)	P767485288	A20B-2002-0521	FANUC	1	IO5OR6
34	74418953	WP126	670285326			1	List Only
35	74418954	WP127	670285327			1	List Only
36	74418938	WP128	670285328			1	List Only
37	74418939	WP111	670285311			1	
38	74416177	I/O Bracket	6702651			1	

Index	Code	Parts Name	Drawing No.	Type	Maker	Q'ty	Note
39	74416178	Stay (for I/O)	6702652 B			1	
40	74417687	Stay For Board	P870078003	G-1070	NICS	2	
41	74572097	Servo Amplifier	P767108086	A02B-6114-H206	FANUC	1	UV
42	74418023	Accessory (Program Controller)	P767485225	A02B-0259-B501	FANUC	1	List Only
43	74418024	Accessory (Program Controller)	P767485226	A02B-0259-H002	FANUC	1	List Only
44	74418025	Accessory (Program Controller)	P767485227	A02B-0259-H011	FANUC	1	List Only
45	74418026	Accessory (Program Controller)	P767485228	A02B-0259-H032	FANUC	1	List Only
46	74418027	Accessory (Program Controller)	P767485229	A02B-0259-H062	FANUC	1	List Only
47	74418049	Accessory (Program Controller)	P767485233	A02B-0259-J199	FANUC	2	List Only
48	74418050	Accessory (Program Controller)	P767485230	A02B-0259-H501#B8E0	FANUC	1	List Only
49	74418955	Accessory (Program Controller)	P767485480	A02B-0259-H590#9096	FANUC	1	List Only
50	74418051	Accessory (Program Controller)	P767485231	A02B-0259-H580#407B	FANUC	1	List Only
51	74418029	Accessory (Program Controller)	P767485234	A02B-0259-J583#407B	FANUC	1	List Only
52	74572845	Optical Link Adapter	P767485005	A13B-0154-B001	FANUC	2	Accessory (List Only)
53	74418010	Optical Fiber Cable	P345008014	A66L-6001-0026#L20R03	FANUC	2	
54	74577588	Pan Head Screw with Washer	P334200182	M3X8(Chromate P-3)		2	
55	74575020	Pan Head Screw with Washer	P334200144	M3X6(Chromate P-4)		5	
56	74417688	Pan Head Screw with Washer	P334200173	M3X6(NickelP-4)		1	
57	74577588	Pan Head Screw with Washer	P334200182	M3X8(Chromate P-3)		2	

Index	Code	Parts Name	Drawing No.	Type	Maker	Q'ty	Note
58	74417688	Pan Head Screw with Washer	P334200173	M3X6(NickelP-4)		1	
59	74575020	Pan Head Screw with Washer	P334200144	M3X6(Chromate P-4)		2	
60	74577588	Pan Head Screw with Washer	P334200182	M3X8(Chromate P-3)		2	
61	74417688	Pan Head Screw with Washer	P334200173	M3X6(NickelP-4)		1	
62	74575020	Pan Head Screw with Washer	P334200144	M3X6(Chromate P-4)		2	
63	74577525	Pan Head Screw with Washer	P334200183	M4X10(Chromate P-3)		6	
64	74418956	Power Mate Bracket	6705288 B			1	List Only
65	74418940	Cable (CP1)	670504801			1	List Only
66	74418957	Cable (CB155)	670504802			1	List Only
67	74418941	Cable (PEMBMT)	670504803			1	List Only
68	74418958	Cable (EMGMT)	670504804			1	List Only
69	74418942	Cable (J142)	670504805			1	List Only
70	74418959	Cable (WLK3)	670526025			1	List Only
71	74418943	Link Adapter Bracket	6705263			1	List Only
72	71516397	Cable Clamp	P767485035	A02B-0124-K001	FANUC	1	Accessory (List Only)
73	74418054	Fuse	P842068012	A02B-0124-K101	FANUC	5	Accessory (List Only)
74	74418039	Accessory (Program Controller)	P767485048	A02B-0211-C050#R	FANUC	1	Accessory (List Only)
75		Mannual	P767484014	B-63175JA	FANUC	1	Accessory (List Only)
76	71367146	Battery	P379828002	A02B-0200-K102	FANUC	1	Accessory (List Only)

Index	Code	Parts Name	Drawing No.	Type	Maker	Q'ty	Note
77	74418055	Memory Card	P379038010	CFC-016MBA	HAGIWARA	1	Accessory (List Only)
78	74418032	Memory Card Adapter	P379868002	CFC-ADP02	HAGIWARA	1	Accessory (List Only)

<List Only>

6703205	Tape Memory Length 640m	1
6703206	Tape Memory Length 1280m	1
6703207	Tape Memory Length 2560m	1 2

6703205
6703206
6703207

Unit No. 158

Memory Up

From Serial No.36102001 and after

Index	Code	Parts Name	Drawing No.	Type	Maker	Q'ty	Note
1	74419439	Tape Memory Length 640m	QZZ022681	A02B-0284-J945	FANUC	1	640m
1	74419440	Tape Memory Length 1280m	QZZ022682	A02B-0284-J946	FANUC	1	1280m
1	74419438	Tape Memory Length 2560m	P767485527	A02B-0284-J947	FANUC	1	2560m
2	71516367	Program Controller Module	P767478028	A02B-0281-H044	FANUC	1	2560m

From Serial No.36102001 and after

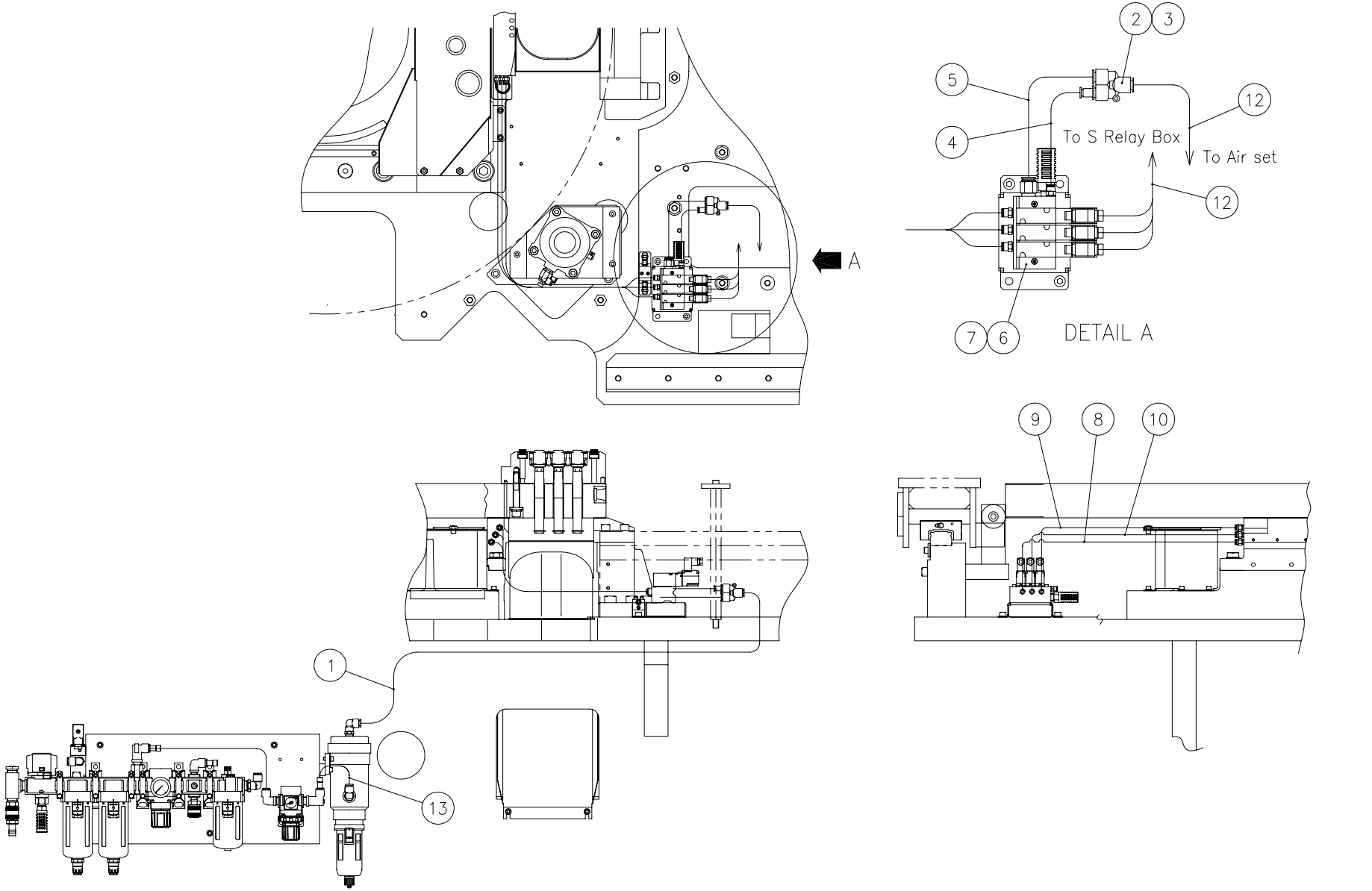

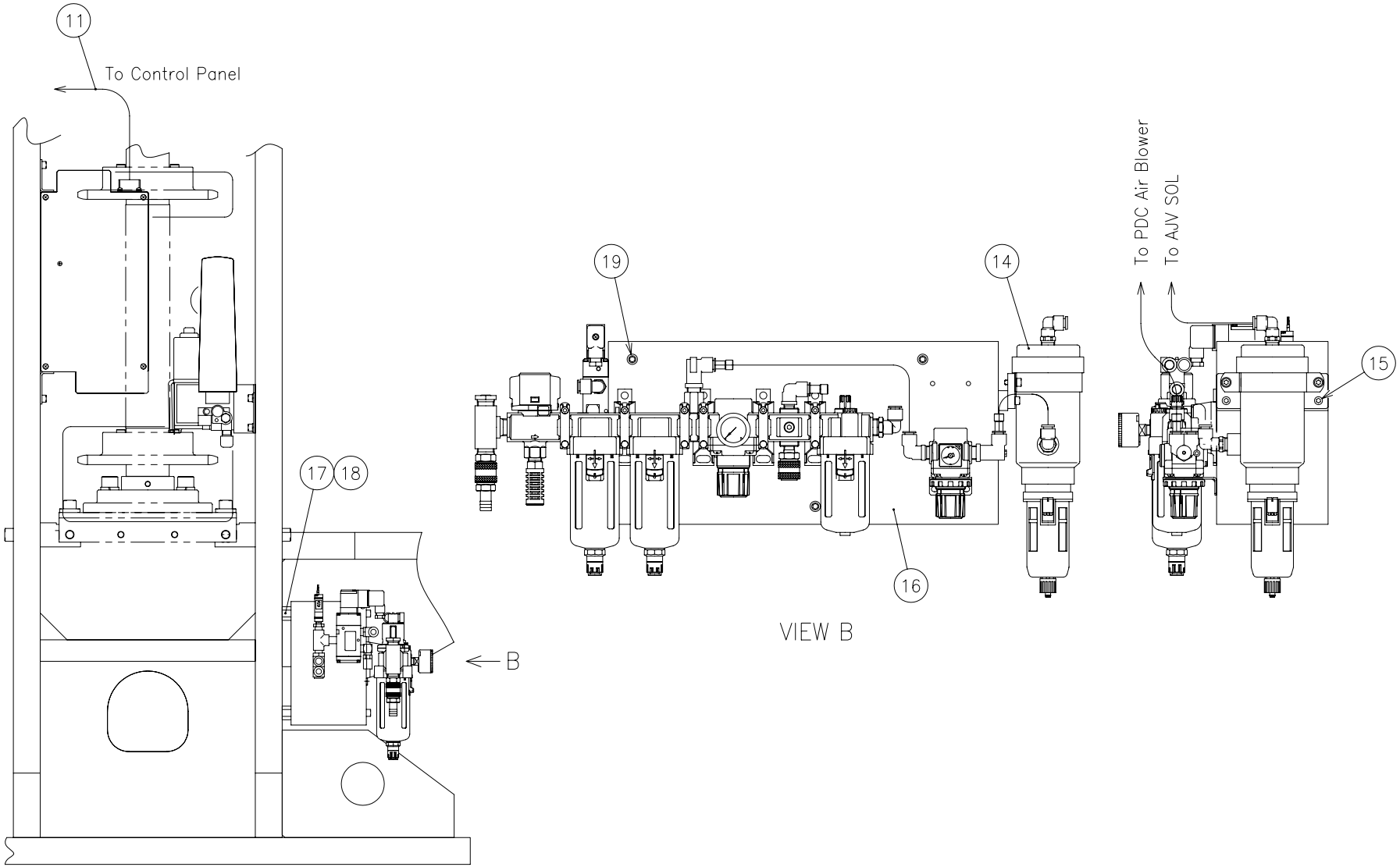
11
To Control Panel
17
18
B
19
14
16
VIEW B
To PDC Air Blower
To AJV SOL
15

6876400A

Unit No. 159

Power Vacuum(1) From Serial No.36102001 and after

Index	Code	Parts Name	Drawing No.	Type	Maker	Q'ty	Note
1	74382882	Plastic Hose	P230242116	U2-4-10X6.5(Black)-3.5M	NITTA MOORE	1	
2	10375623	Instant Fitting	P586624003	EYB10-10	NITTA MOORE	1	
3	74562784	Instant Fitting	P586654002	ER6-10	NITTA MOORE	1	
4	74570235	Plastic Hose	P230222087	U2-4-6X4(Black)-0.2M	NITTA MOORE	1	
5	74382882	Plastic Hose	P230242117	U2-4-10X6.5(Black)-0.2M	NITTA MOORE	1	
6	74570296	Manifold	7832811		SMC	1	
7	74382078	Flange Socket Bolt	P330468006	M8X15	NISSAN NEJI	2	
8	74569814	Plastic Hose	P230222107	U2-4-6X4(Red)-1.5M	NITTA MOORE	1	
9	71512277	Plastic Hose	P230222106	U2-4-6X4(Blue)-1.5M	NITTA MOORE	1	
10	71512276	Plastic Hose	P230222108	U2-4-6X4(Yellow)-1.5M	NITTA MOORE	1	
11	74418960	Cable AJV	6876402			1	
12	74418961	Cable AJV(2)	6876403			1	
13	74382882	Plastic Hose	P230242101	U2-4-10X6.5(Black)-0.5M	NITTA MOORE	1	
14	74419441	WELL AIR	7831599	WA-400DTM-A	KAMATATECNAS	1	
15	79567722	Hex Soc Cap Screw	P330220009	M6X20		2	
16	74419442	Air Control Unit (PDC)	7831618		SMC	1	
17	74569858	Stud	6812934	H22		3	
18	86280603	Socket Set Screw	P330550042	M8X25(Flat-end)		3	
19	79565423	Hex Soc Cap Screw	P330230004	M8X15		3	

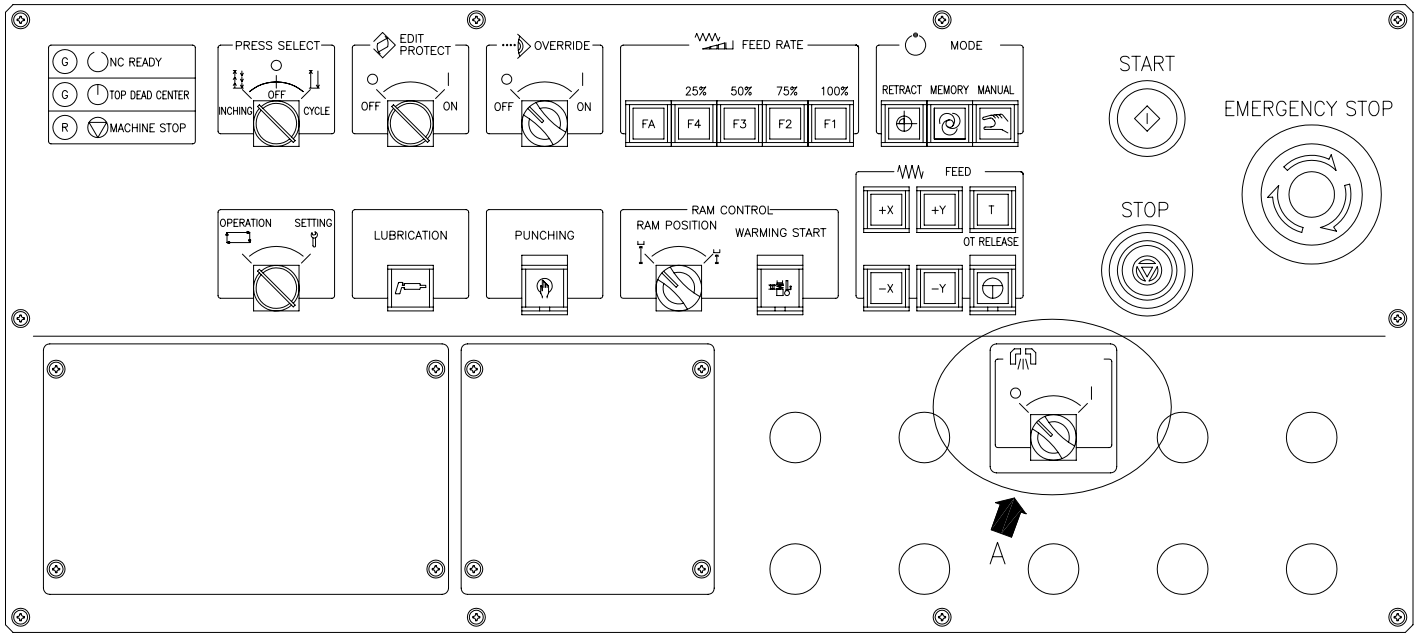

NC Operation Panel

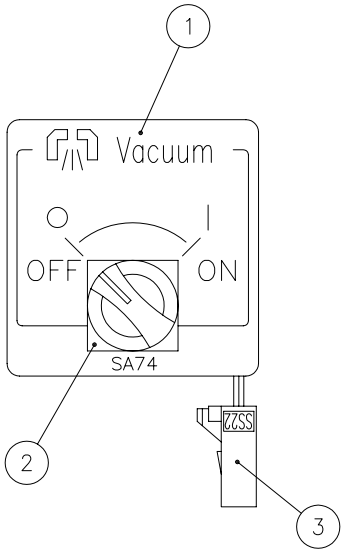

DETAIL A

6706209A

Unit No. 160

Power Vacuum(2) From Serial No.36102001 and after

Index	Code	Parts Name	Drawing No.	Type	Maker	Q'ty	Note
1	74418012	AJV Operation Panel A	6705251			1	(SA74)
2	74572036	Key Select Switch	P820004029	AH165-SP2B11	FUJI Electric	1	SA74
3	74416421	Cable (SS22)	670617217			1	

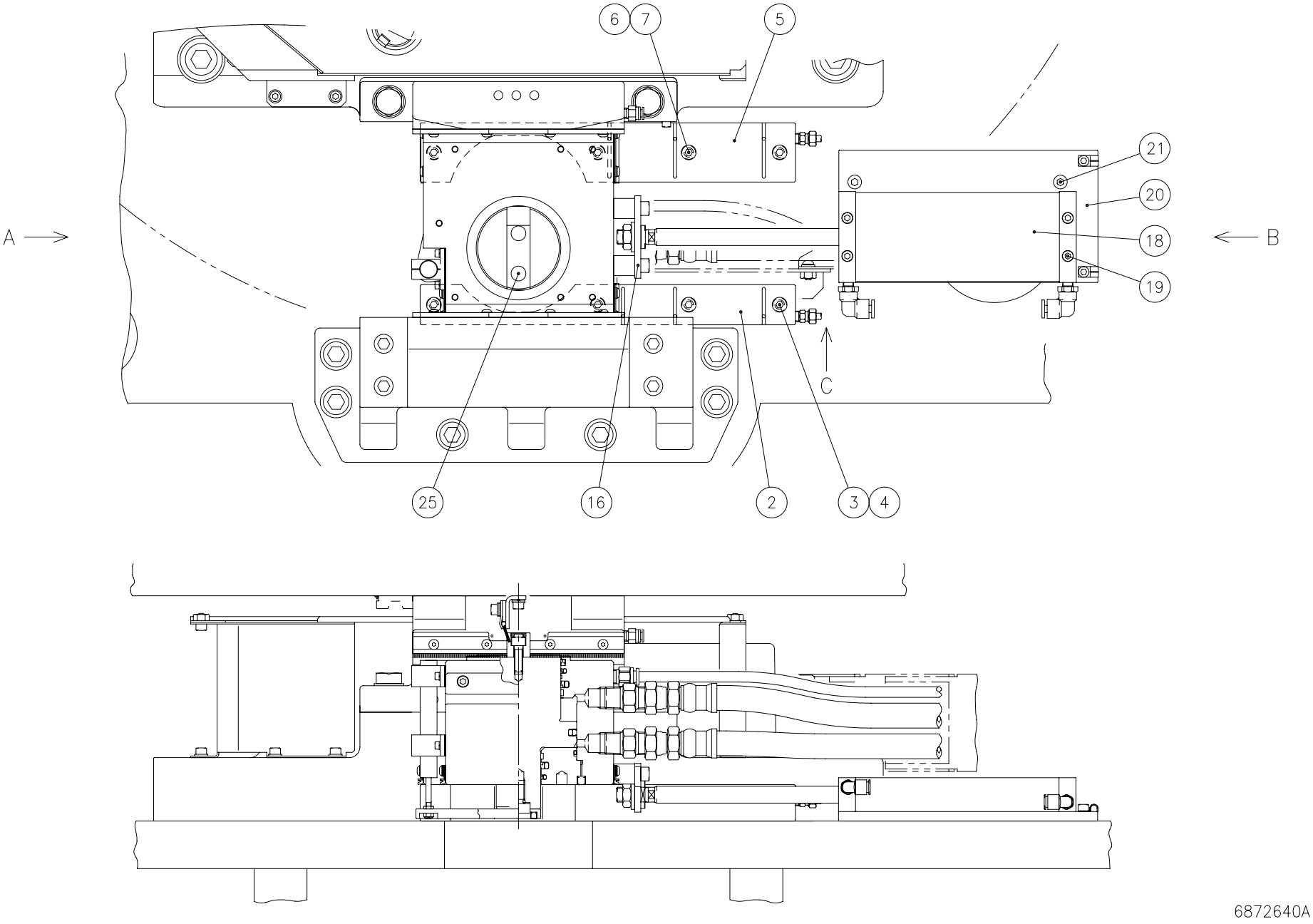
6
7
5
21
20
18
19
A
B
C
25
16
2
3
4
6872640A

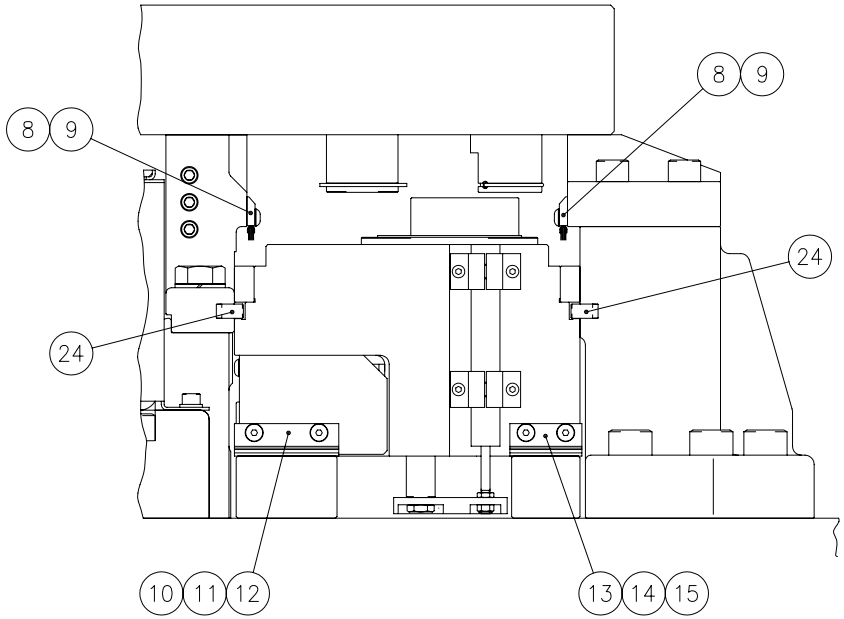

VIEW A

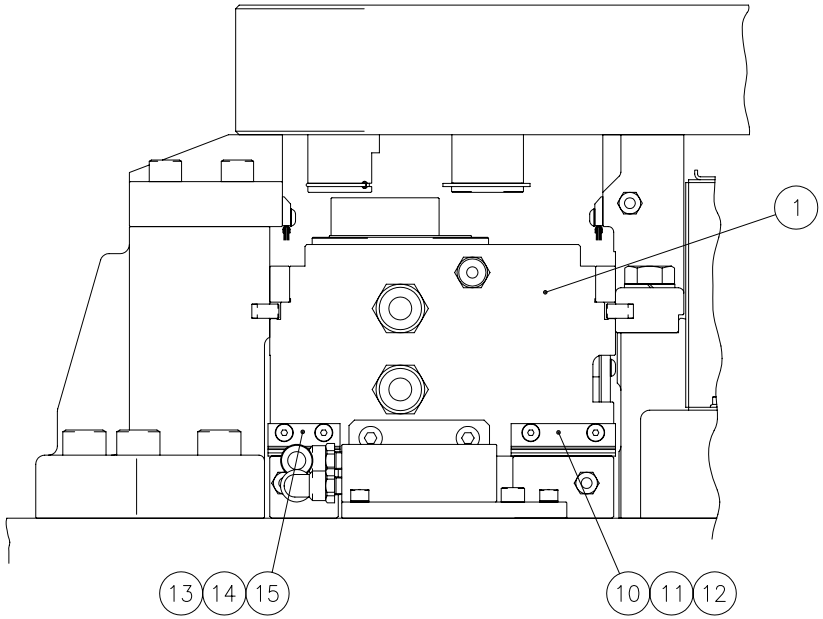

VIEW B

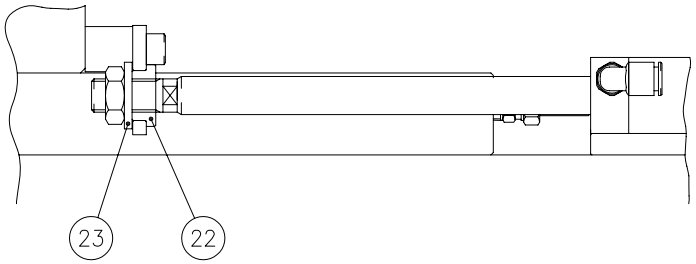

VIEW C

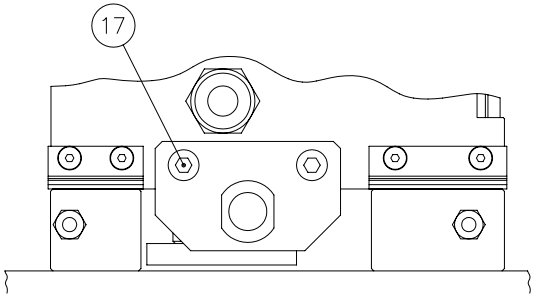

6872640A

From Serial No.36102001 and after

Index	Code	Parts Name	Drawing No.	Type	Maker	Q'ty	Note
1	74418963	Cylinder	7831580	CGFX-110X210N-22	YUKEN Industry	1	
2	74570471	Slide Plate (Front)	6820512			1	
3	10443022	Hex Soc Cap Screw	P330230009	M8X35		4	
4	71360063	Blind Plug	P229138015	C8	THK	4	
5	74570472	Slide Plate (Rear)	6820513			1	
6	10443022	Hex Soc Cap Screw	P330230009	M8X35		4	
7	71360063	Blind Plug	P229138015	C8	THK	4	
8	74570473	Brush Scraper	6820516			2	
9	31179660	Button Head Screw	P334500009	M5X10		8	
10	74570474	Scraper (1)	6813585	LR-3S		2	
11	31179660	Button Head Screw	P334500009	M5X10		4	
12	31182981	Washer	P336000080	5(Regular Round)		4	
13	74570475	Scraper (1)	6813586	LR-3S		2	
14	31179660	Button Head Screw	P334500009	M5X10		4	
15	31182981	Washer	P336000080	5(Regular Round)		4	
16	74570476	Cylinder Support	6813583 A			1	
17	36367625	Hex Soc Cap Screw	P330230010	M8X40		2	
18	74570477	Air Cylinder	7832829	MDUB40-165DM-J79	SMC	1	
19	86213043	Hex Soc Cap Screw	P330220012	M6X30		4	

From Serial No.36102001 and after

Index	Code	Parts Name	Drawing No.	Type	Maker	Q'ty	Note
20	74570478	Cylinder Base	6820514			1	
21	79566121	Hex Soc Cap Screw	P330230007	M8X25		2	
22	74419443	Collar	7421468 A			1	
23	10570319	Washer	P336000009	14(Regular Round)		1	
24	74570479	Parallel Pin	P337054101	MST8-15	MISUMI	8	
25	71360063	Blind Plug	P229138015	C8	THK	2	
26	74569246	Legend Plate (Warning)(P&F) E	6598291			1	English (List Only)
26	74569248	Legend Plate (Warning)(P&F) F	6814264			1	French (List Only)
26	74569247	Legend Plate (Warning)(P&F) G	6814266			1	German (List Only)
26	74569245	Legend Plate (Warning)(P&F) I	6814265			1	Italian (List Only)
26	74419444	Legend Plate (Warning)(P&F) C	6817763			1	Chinese (List Only)
27	74326603	Blind Rivet	P339208001	NTA3-2	LOBTEX	4	List Only

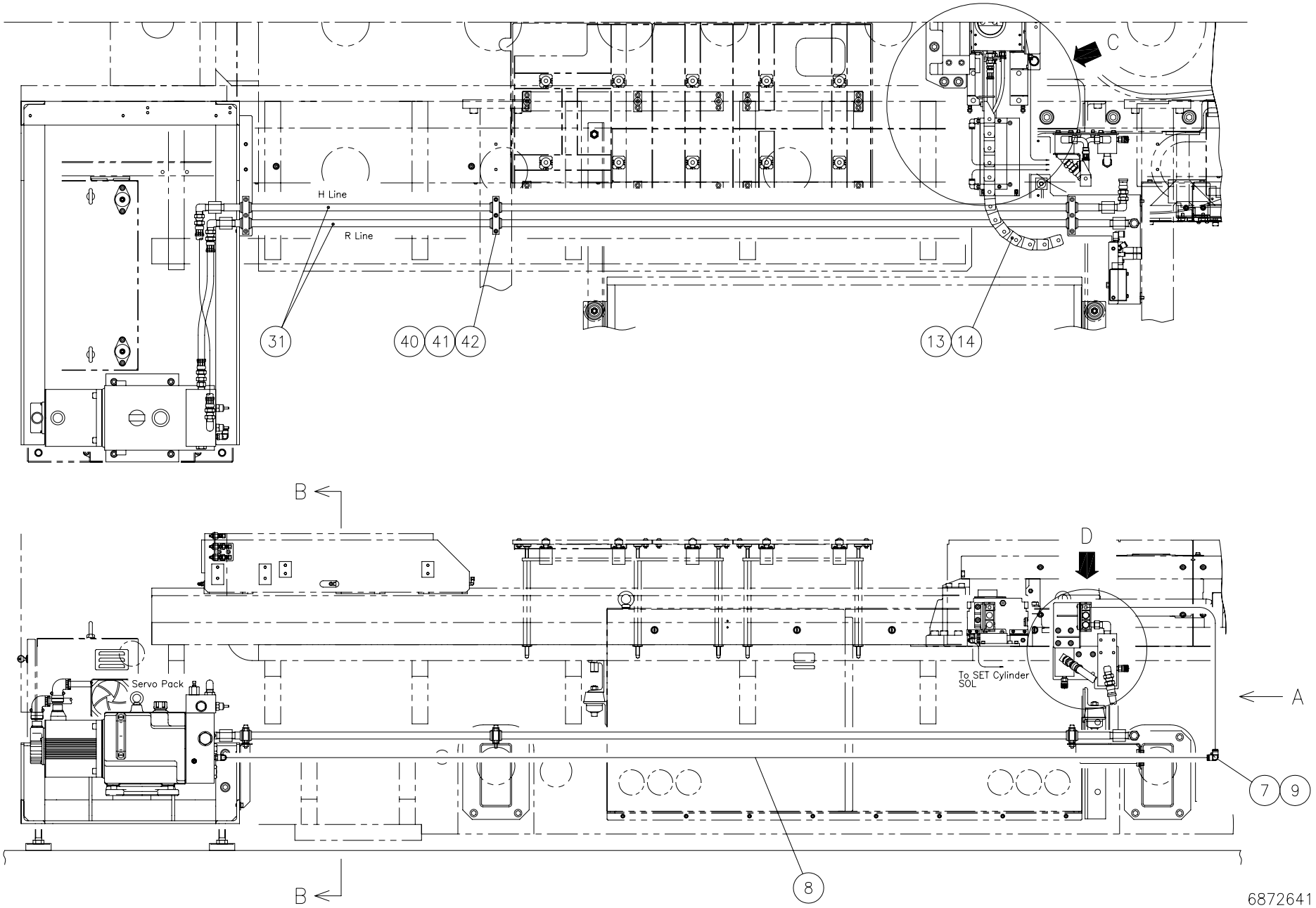
C
H Line
R Line
31
40
41
42
13
14
B
D
Servo Pack
To SET Cylinder
SOL
A
7
9
8
B
6872641

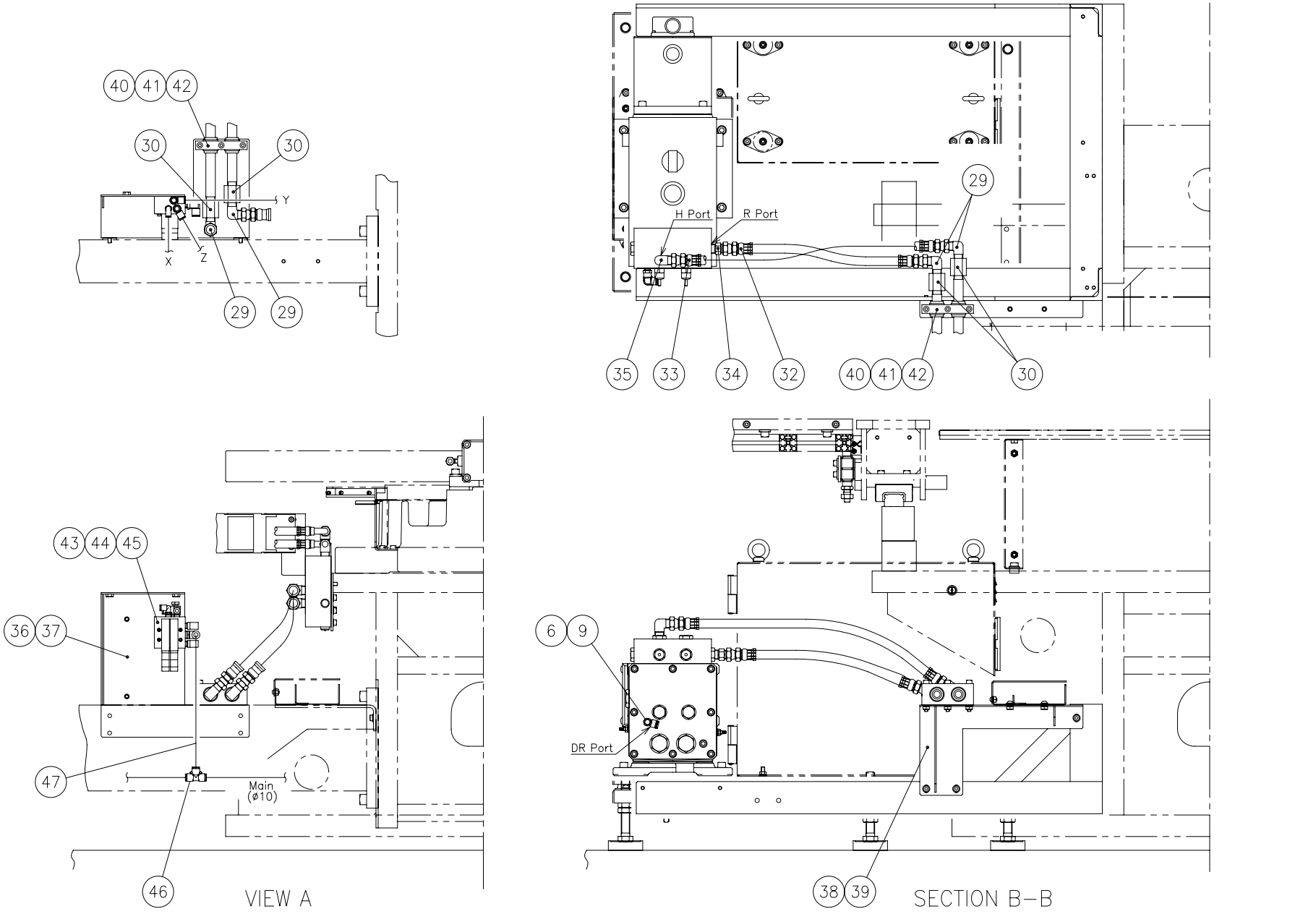
40
41
42
30
30
Y
X
Z
29
29
H Port
R Port
29
35
33
34
32
40
41
42
30
43
44
45
36
37
47
Main
(ø10)
46
VIEW A
6
9
DR Port
38
39
SECTION B–B
6872641

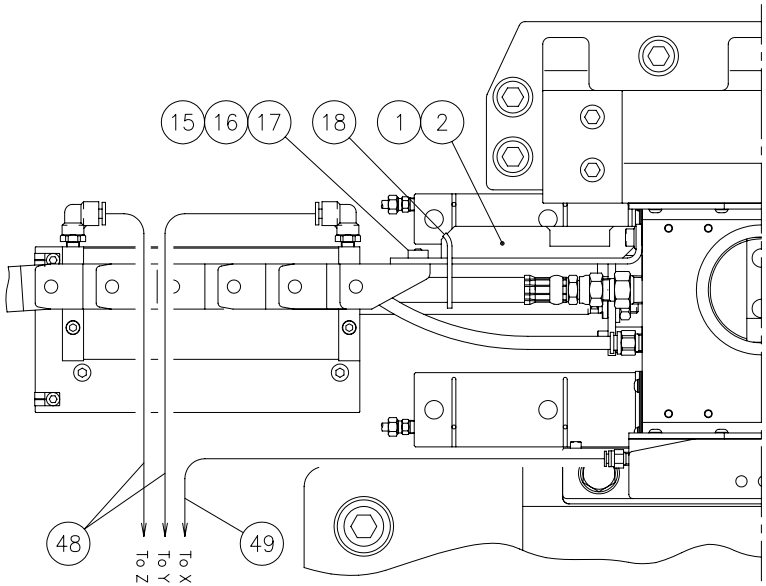

DETAIL C

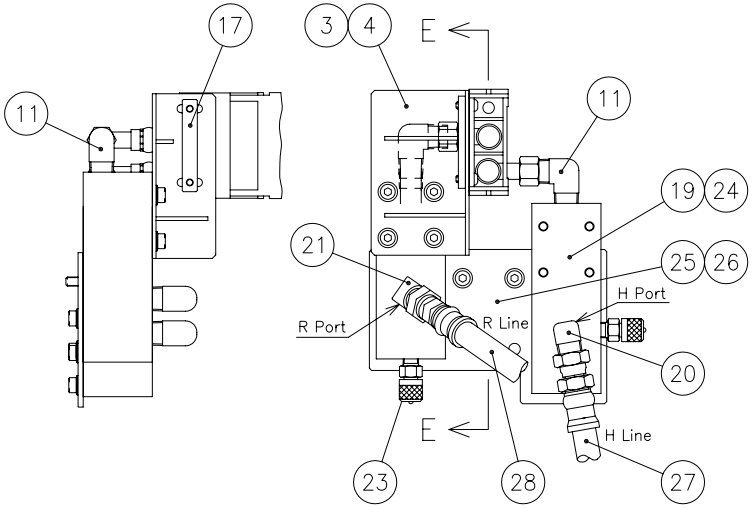

DETAIL D

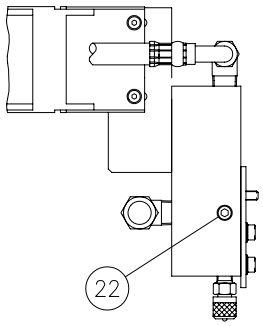

SECTION E–E

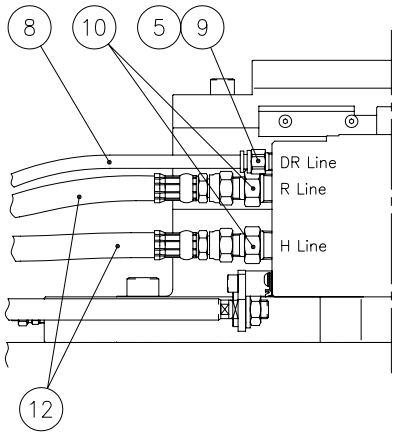

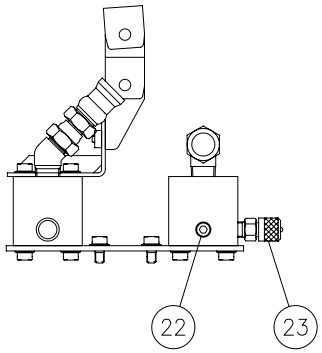

6872641

From Serial No.36102001 and after

Index	Code	Parts Name	Drawing No.	Type	Maker	Q'ty	Note
1	74570482	Runner Flex Bracket	6820523 A			1	
2	74382078	Flange Socket Bolt	P330468006	M8X15	NISSAN NEJI	2	
3	74418964	Runner Flex Bracket	6874182			1	
4	45252746	Flange Socket Bolt	P330460005	M8X15		4	
5	74383604	Instant Fitting	P586508013	PC10-02	PISCO	1	
6	36387215	Instant Fitting	P586568018	PL10-02	PISCO	1	
7	74418965	Instant Fitting	P586568195	PV10	PISCO	1	
8	36387316	Plastic Hose	P230248017	WA1075(Blue)-5M	PISCO	1	
9	74418966	Plastic Hose	P230328007	WR1075	PISCO	4	
10	74570483	Hose Adapter	P589222355	1009-PT1/2-PF3/8	Yokohama Rubber	2	
11	74418967	Hose Adapter	P589222386	1034-PT1/2-PF3/8	Yokohama Rubber	2	
12	74418968	Hydraulic Hose (1)	6874184	OMB20F-06		2	
13	74418969	Movable Guard (Cable)	P444002385	25.4/150-17L-24B	Captain Industries	1	
14	74387766	Separator	P444018031	201	Captain Industries	17	Accessory(Cable Movable Guard)
15	74314603	Button Head Screw	P334500016	M6X20		4	
16	79565419	Washer	P336000005	6(Regular Round)		4	
17	74570487	Square Nut	6820521			2	
18	74571460	Cable Band	P381058056	SKB-3M	KITAGAWA	20	
19	74418970	Manifold	6872657	S60		2	

From Serial No.36102001 and after

Index	Code	Parts Name	Drawing No.	Type	Maker	Q'ty	Note
20	74570489	Hose Adapter	P589222257	1034-PT1/2-PF1/2	Yokohama Rubber	1	
21	74570488	Hose Adapter	P589222276	1036-PT1/2-PF1/2	Yokohama Rubber	1	
22	36327821	Plug For Piping	P580208002	GM-1/4	GOSHO Works	2	
23	74418971	Quick Connect Joint	P589028021	2103-01-41.00HD	HYDAC	2	
24	74382078	Flange Socket Bolt	P330468006	M8X15	NISSAN NEJI	8	
25	74418972	Manifold Bracket	6874181			1	
26	74382078	Flange Socket Bolt	P330468006	M8X15	NISSAN NEJI	2	
27	74418973	Oil Hose Assy	P220462135	NWP21012-1005-0.36M	Yokohama Rubber	1	
28	74570507	Oil Hose Assy	P220422125	NWP21012-1005-0.4M	Yokohama Rubber	1	
29	74570489	Hose Adapter	P589222257	1034-PT1/2-PF1/2	Yokohama Rubber	4	
30	74418974	Socket For Piping	P580238019	2096-PT1/2-1/2	Yokohama Rubber	4	
31	74418975	Pipe	6872652			2	
32	74418976	Oil Hose Assy	P220422151	NWP21012-1005-0.5M	Yokohama Rubber	1	
33	74418977	Oil Hose Assy	P220422149	NWP21012-1005-0.69M	Yokohama Rubber	1	
34	74418978	Hose Adapter	P589222401	1067-PF1/2	Yokohama Rubber	1	
35	74418979	Hose Adapter	P589222279	1071-PF1/2	Yokohama Rubber	1	
36	74418980	Bracket	6872654			1	
37	74382078	Flange Socket Bolt	P330468006	M8X15	NISSAN NEJI	4	
38	74418981	Hose Clamp Bracket	6872653			1	

From Serial No.36102001 and after

Index	Code	Parts Name	Drawing No.	Type	Maker	Q'ty	Note
39	74382078	Flange Socket Bolt	P330468006	M8X15	NISSAN NEJI	3	
40	74722823	Piping Clamp	P381103002	MC50-2	NHK	3	
41	74722639	Bush For Cable	P229116002	RB50-004	NHK	6	
42	10571228	Hex Soc Cap Screw	P330230015	M8X65		9	
43	74570504	P&F Solenoid ASSY	7832831		SMC	1	
44	76116106	Hex Soc Cap Screw	P330200025	M4X40		4	
45	71513636	Washer	P336000092	4(Regular Round)		4	
46	74379378	Instant Fitting	P586604013	EUT10	NITTA MOORE	1	
47	74382882	Plastic Hose	P230242112	U2-4-10X6.5(Black)-2M	NITTA MOORE	1	
48	74570235	Plastic Hose	P230232052	U2-4-8X5(Black)-2M	NITTA MOORE	2	
49	74570235	Plastic Hose	P230222089	U2-4-6X4(Black)-2.5M	NITTA MOORE	1	
50		Hydraulic Oil	P238000057	AS-46-1L	AMADA	8	List Only

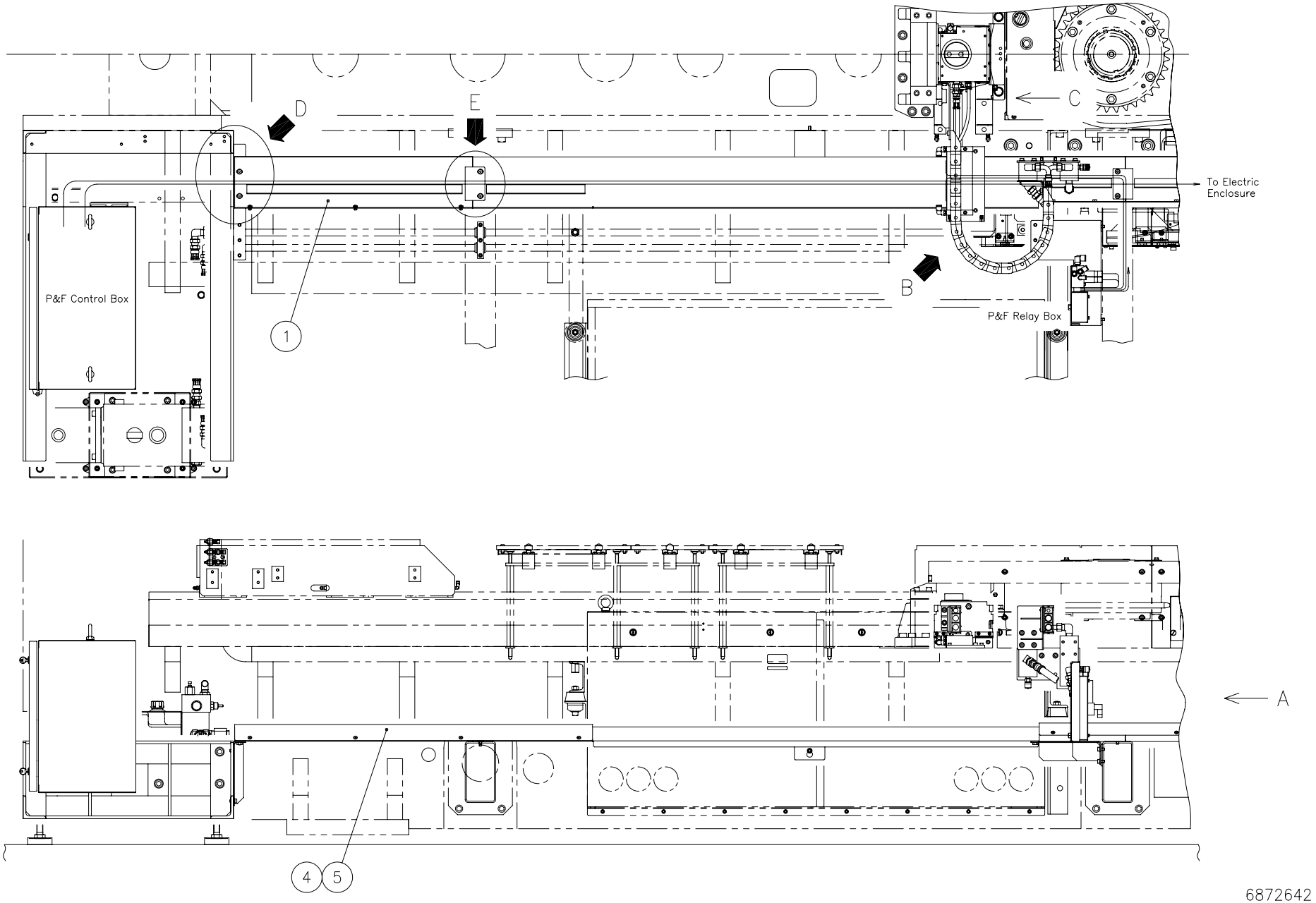
D
E
C
B
A
To Electric Enclosure
P&F Control Box
P&F Relay Box
1
4
5
6872642

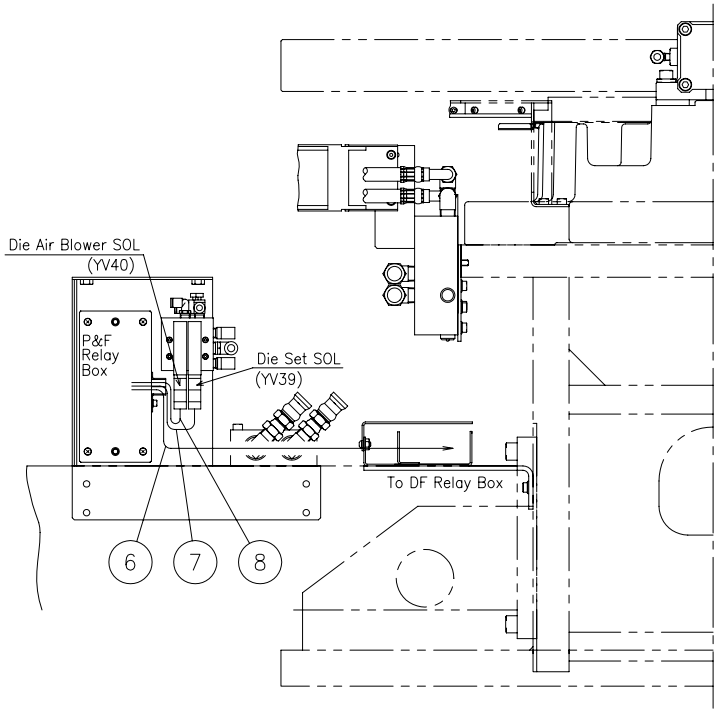

VIEW A

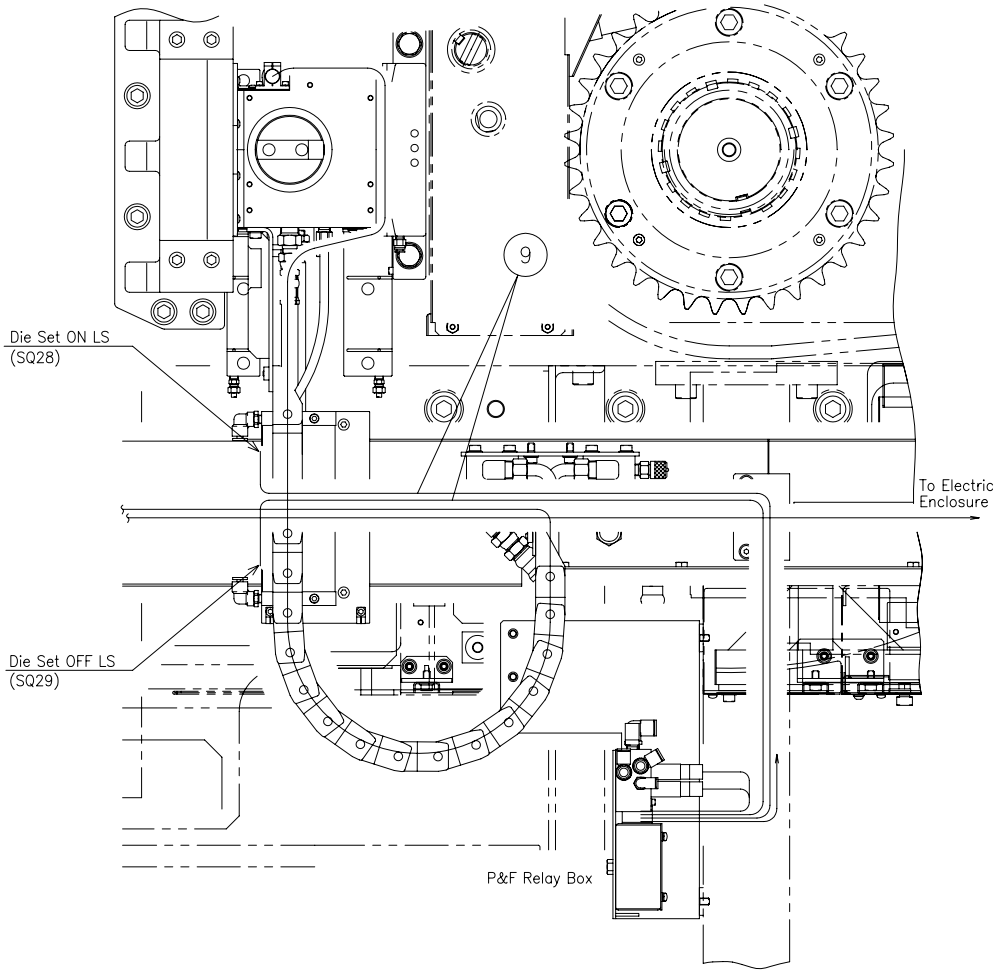

DETAIL B

6872642

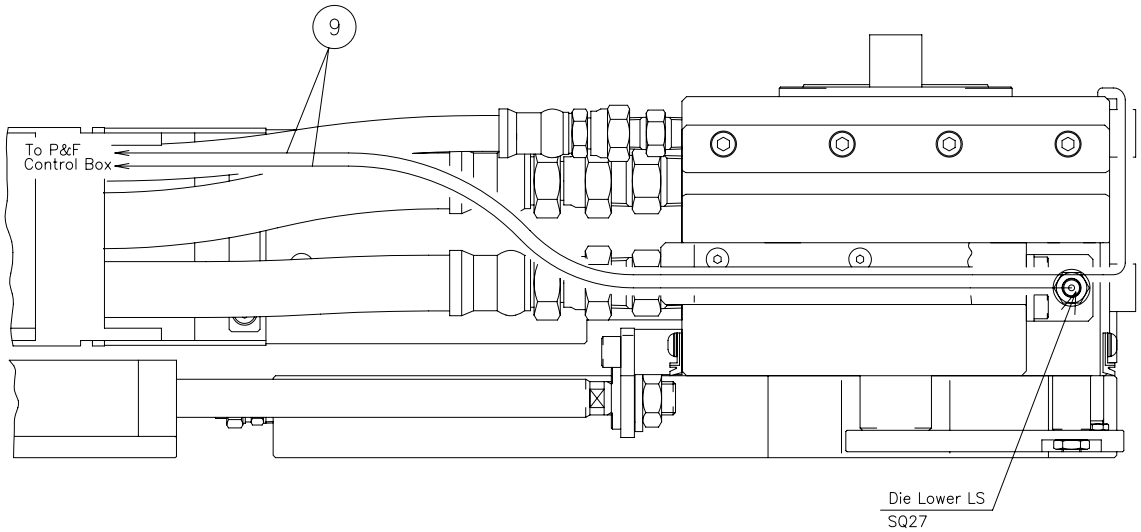

VIEW C

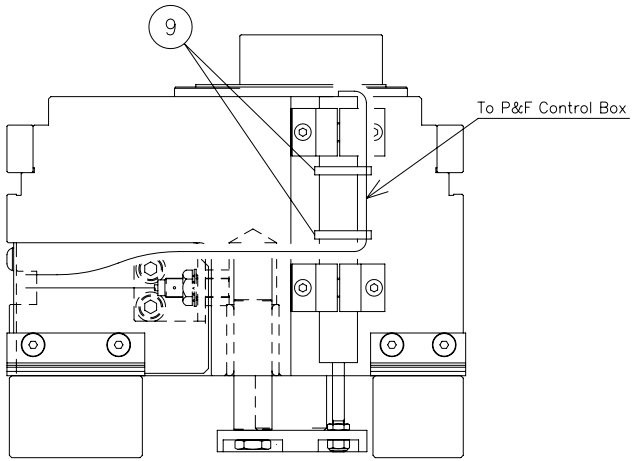

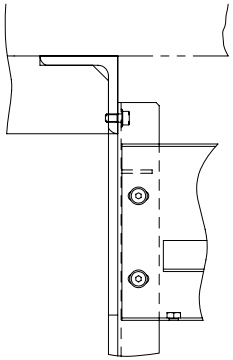

DETAIL D

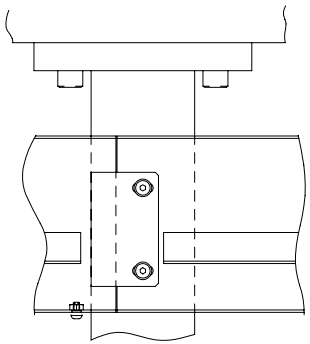

DETAIL E

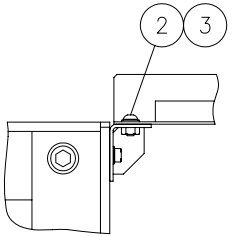

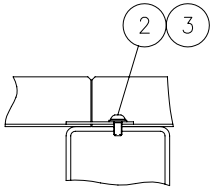

6872642

Unit No. 163

P&F(3) From Serial No.36102001 and after

Index	Code	Parts Name	Drawing No.	Type	Maker	Q'ty	Note
1	74418983	Duct (C) PF	6872655			1	
2	10569021	Button Head Screw	P334500019	M8X15		4	
3	79567109	Washer	P336000006	8(Regular Round)		4	
4	74418984	Duct Cover (C) PF	6872656			1	
5	74569504	Button Head Screw	7830643		MOURI	4	
6	74418985	Cable PF	6872650			1	
7	74570514	Cable (PF-2)	6813692 A			1	
8	74570515	Cable (PF-3)	6813693 A			1	
9	74571460	Cable Band	P381058056	SKB-3M	KITAGAWA	10	
10	74568661	Cable Band	P381058101	TM3S25	KITAGAWA	1	List Only
11	31183033	Hex Soc Cap Screw	P330220003	M6X10		1	List Only

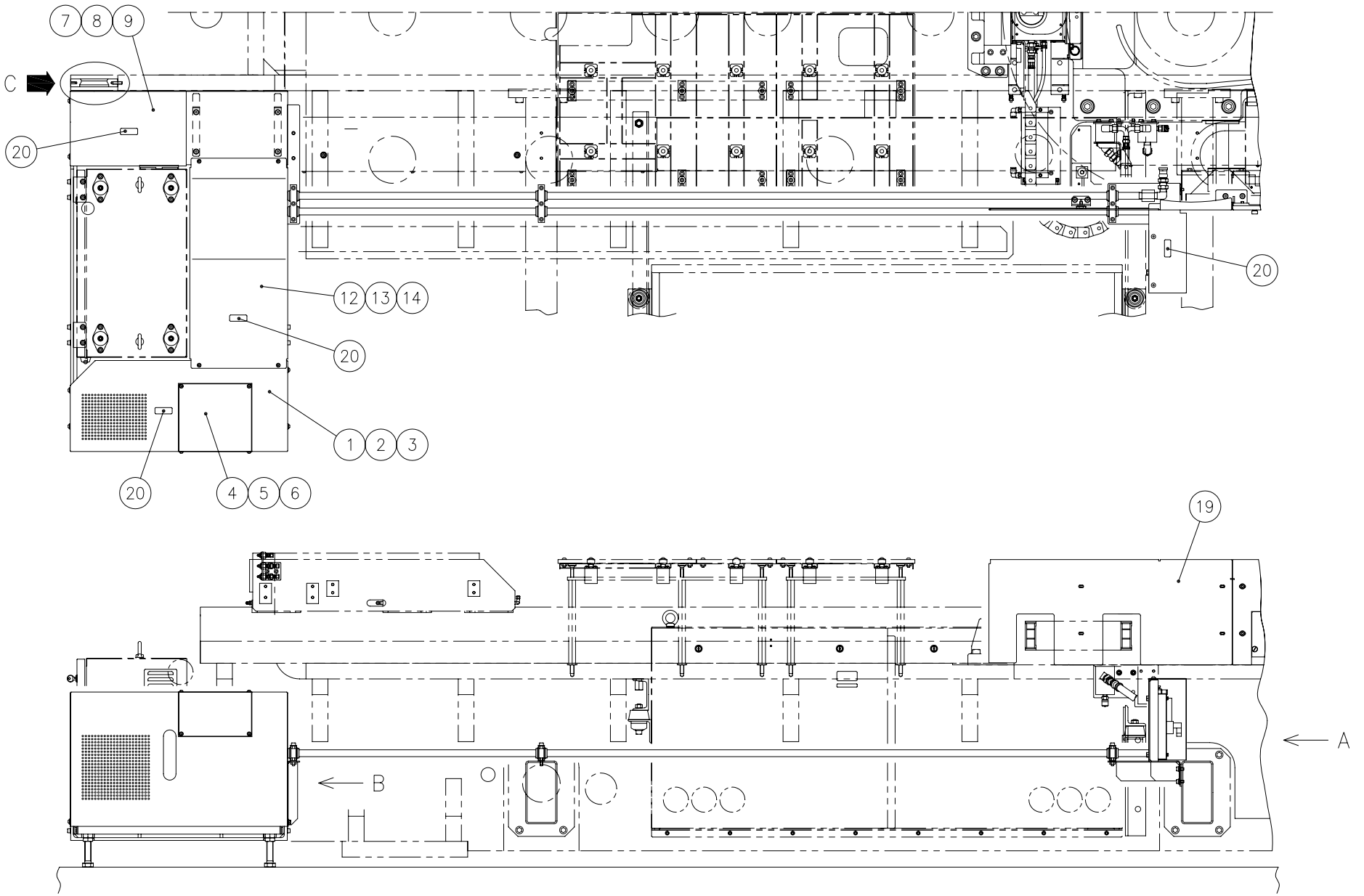
7
8
9
C
20
12
13
14
20
20
1
2
3
20
4
5
6
19
A
B
6872643

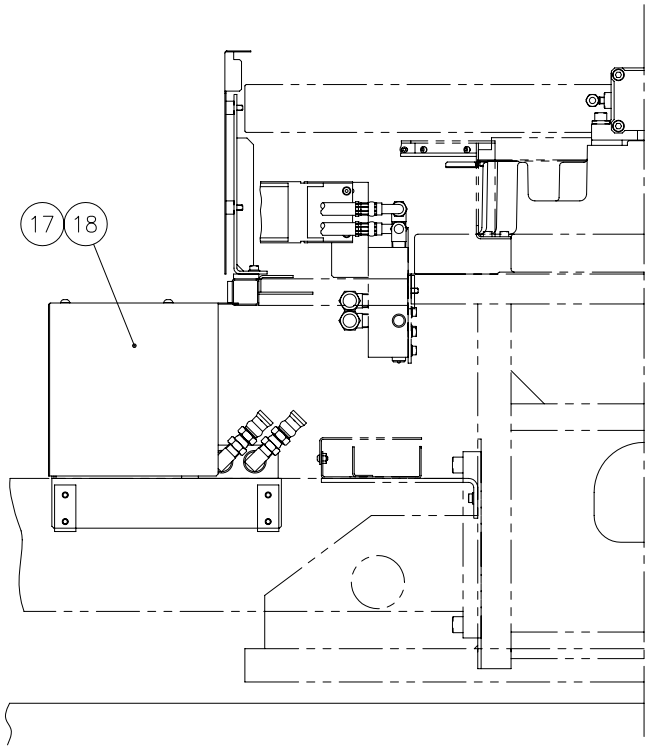

VIEW A

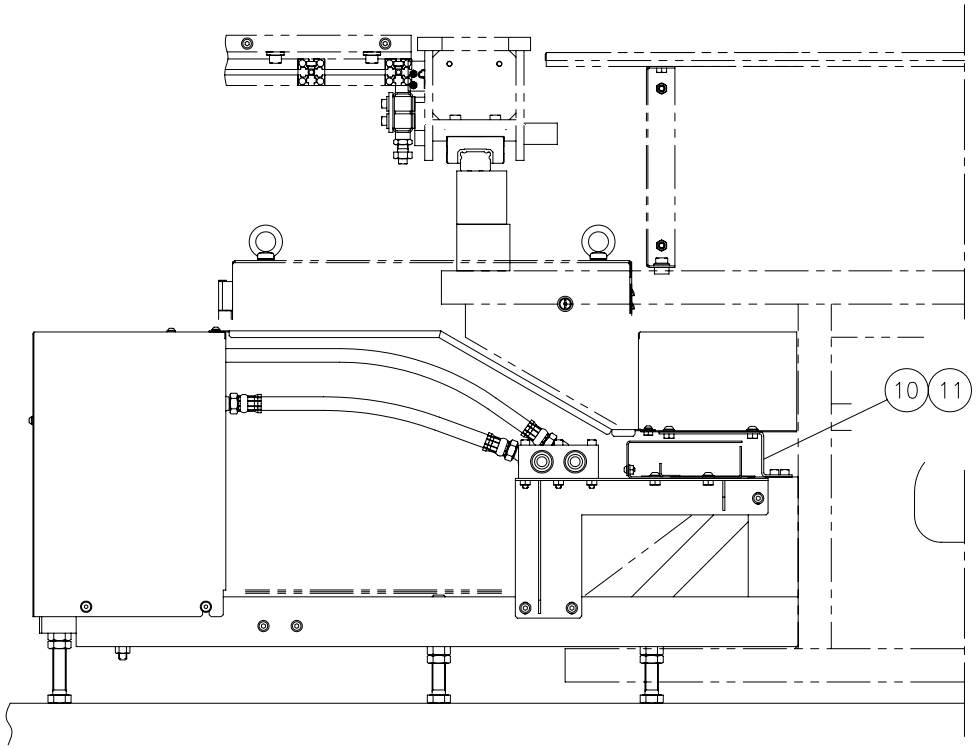

VIEW B

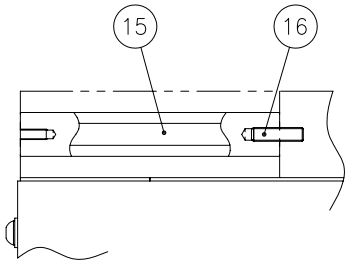

DETAIL C

6872643

From Serial No.36102001 and after

Index	Code	Parts Name	Drawing No.	Type	Maker	Q'ty	Note
1	74418986	Servo Drive Cover	6872658			1	
2	10569021	Button Head Screw	P334500019	M8X15		4	
3	79567109	Washer	P336000006	8(Regular Round)		4	
4	74418987	Cap	6872659			1	
5	36379029	Button Head Screw	P334500013	M6X10		4	
6	79565419	Washer	P336000005	6(Regular Round)		4	
7	74418988	Wiring Cover	6872660			1	
8	10569021	Button Head Screw	P334500019	M8X15		7	
9	79567109	Washer	P336000006	8(Regular Round)		7	
10	74418989	Bracket	6872662			2	
11	79565423	Hex Soc Cap Screw	P330230004	M8X15		4	
12	74418990	Piping Cover	6872661			1	
13	36379029	Button Head Screw	P334500013	M6X10		4	
14	79565419	Washer	P336000005	6(Regular Round)		4	
15	74418991	Stud (Side Cover)	6875301	H22		1	
16	13240902	Socket Set Screw	P330550043	M8X30(Flat-end)		1	
17	74418992	Cover	6872663			1	
18	10569021	Button Head Screw	P334500019	M8X15		2	
19	74418993	Cover R (1)	6874220			1	

From Serial No.36102001 and after

Index	Code	Parts Name	Drawing No.	Type	Maker	Q'ty	Note
20	71130447	Legend Plate (Do Not Get On)	0840546			4	

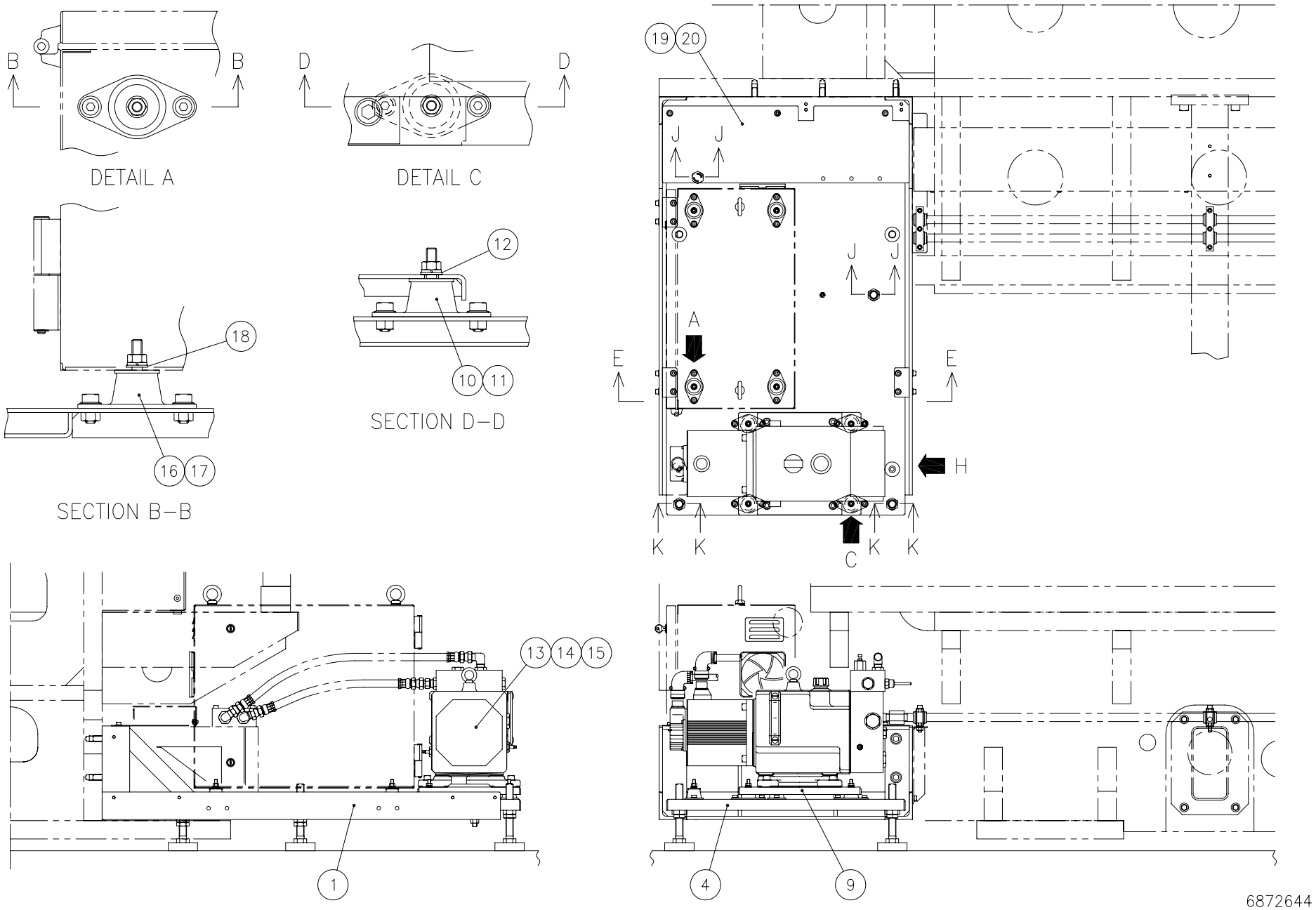
B
B
DETAIL A
D
D
DETAIL C
18
16
17
SECTION B–B
12
10
11
SECTION D–D
19
20
J
J
J
J
A
E
E
H
K
K
C
K
K
13
14
15
1
4
9
6872644

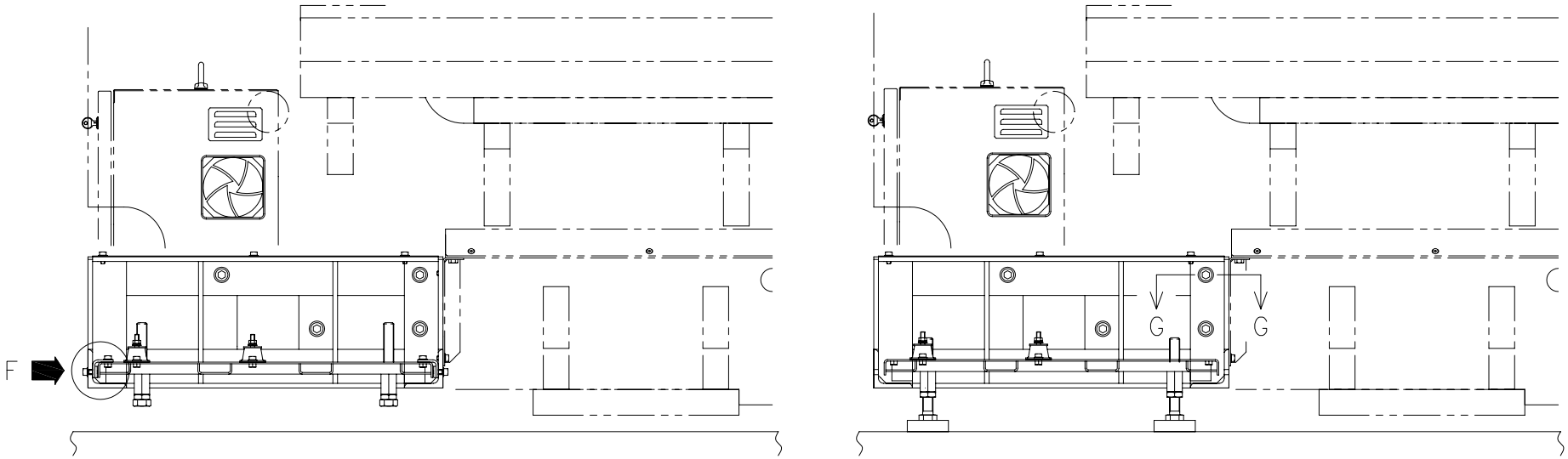

<Shipping> <Setting>

SECTION E–E

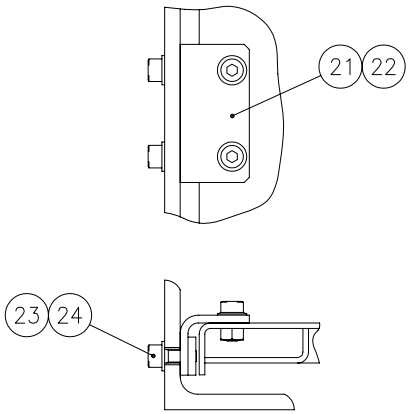

DETAIL F

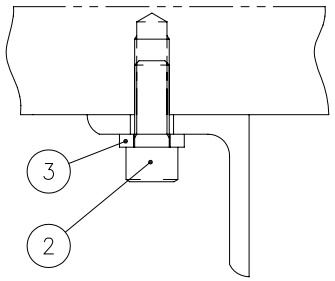

SECTION G–G

6872644

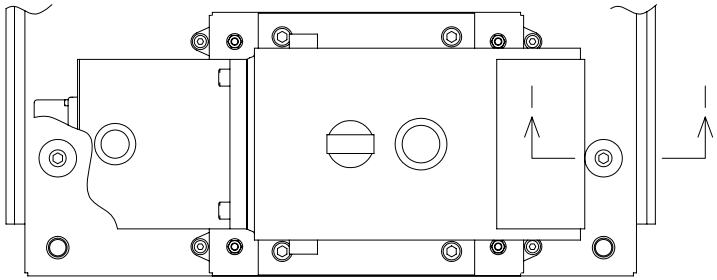

DETAIL H

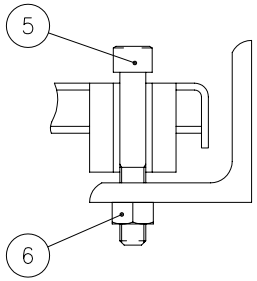

SECTION I–I

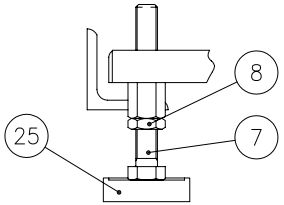

<Pass Line 1000>

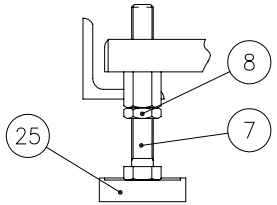

<Pass Line 1010>

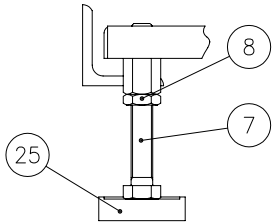

<Pass Line 1040>

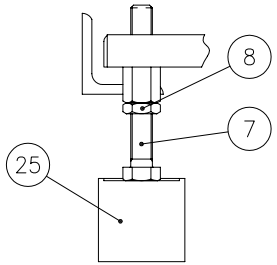

<Pass Line 1070>

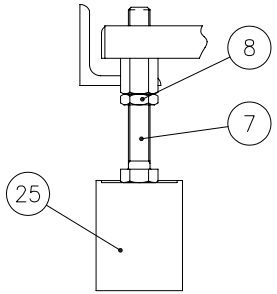

<Pass Line 1105>

SECTION J–J

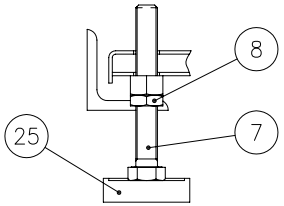

<Pass Line 1000>

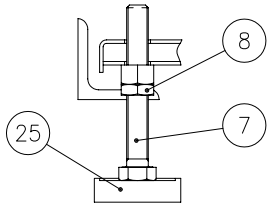

<Pass Line 1010>

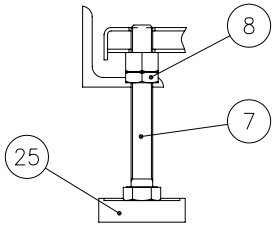

<Pass Line 1040>

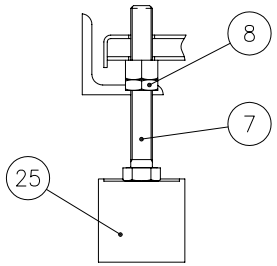

<Pass Line 1070>

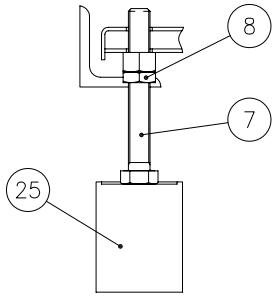

<Pass Line 1105>

SECTION K–K

6872644

From Serial No.36102001 and after

Index	Code	Parts Name	Drawing No.	Type	Maker	Q'ty	Note
1	74418994	Unit Bracket	6872664	L75X75X9		1	
2	86620312	Hex Soc Cap Screw	P330260032	M16X40		4	
3	74303705	Washer (M16)	6012794			4	
4	74418995	Unit Base	6872665 A			1	
5	10000830	Hex Soc Cap Screw	P330250015	M12X80		2	
6	78187940	Nut	P332000033	M12(Type-1)		2	
7	44420109	Bolt	P330070042	M20X150(All-thread)		4	
8	10380040	Nut	P332000023	M20(Thin)		4	
9	74418996	Servo Pack Base	6872666			1	
10	73116272	Vibration Isolator	P382002032	KLB-3545	KURASHIKI KAKO	4	
11	74382078	Flange Socket Bolt	P330468006	M8X15	NISSAN NEJI	8	
12	79567109	Washer	P336000006	8(Regular Round)		4	
13	74418997	Servo Drive Pack	7831581	YSD2-B-44	YUKEN Industry	1	
14	36110743	Hex Soc Cap Screw	P330250006	M12X35		4	
15	86613931	Washer	P336000008	12(Regular Round)		4	
16	73116272	Vibration Isolator	P382002032	KLB-3545	KURASHIKI KAKO	4	
17	74382078	Flange Socket Bolt	P330468006	M8X15	NISSAN NEJI	8	
18	79567109	Washer	P336000006	8(Regular Round)		4	
19	74418998	Plate For Cable	6872667			1	

From Serial No.36102001 and after

Index	Code	Parts Name	Drawing No.	Type	Maker	Q'ty	Note
20	74382078	Flange Socket Bolt	P330468006	M8X15	NISSAN NEJI	3	
21	74418999	Shipping Bracket (PF)	6872672			3	Shipping
22	74382078	Flange Socket Bolt	P330468006	M8X15	NISSAN NEJI	6	Shipping
23	79564804	Hex Soc Cap Screw	P330230006	M8X20		6	Shipping
24	79567109	Washer	P336000006	8(Regular Round)		6	Shipping
25	74570084	Base Block (20)	6820773			4	P.L1000-1040
25	74570083	Base Block (75)	6820774			4	P.L1070
25	74575115	Base Block (100)	6820779			4	P.L1105

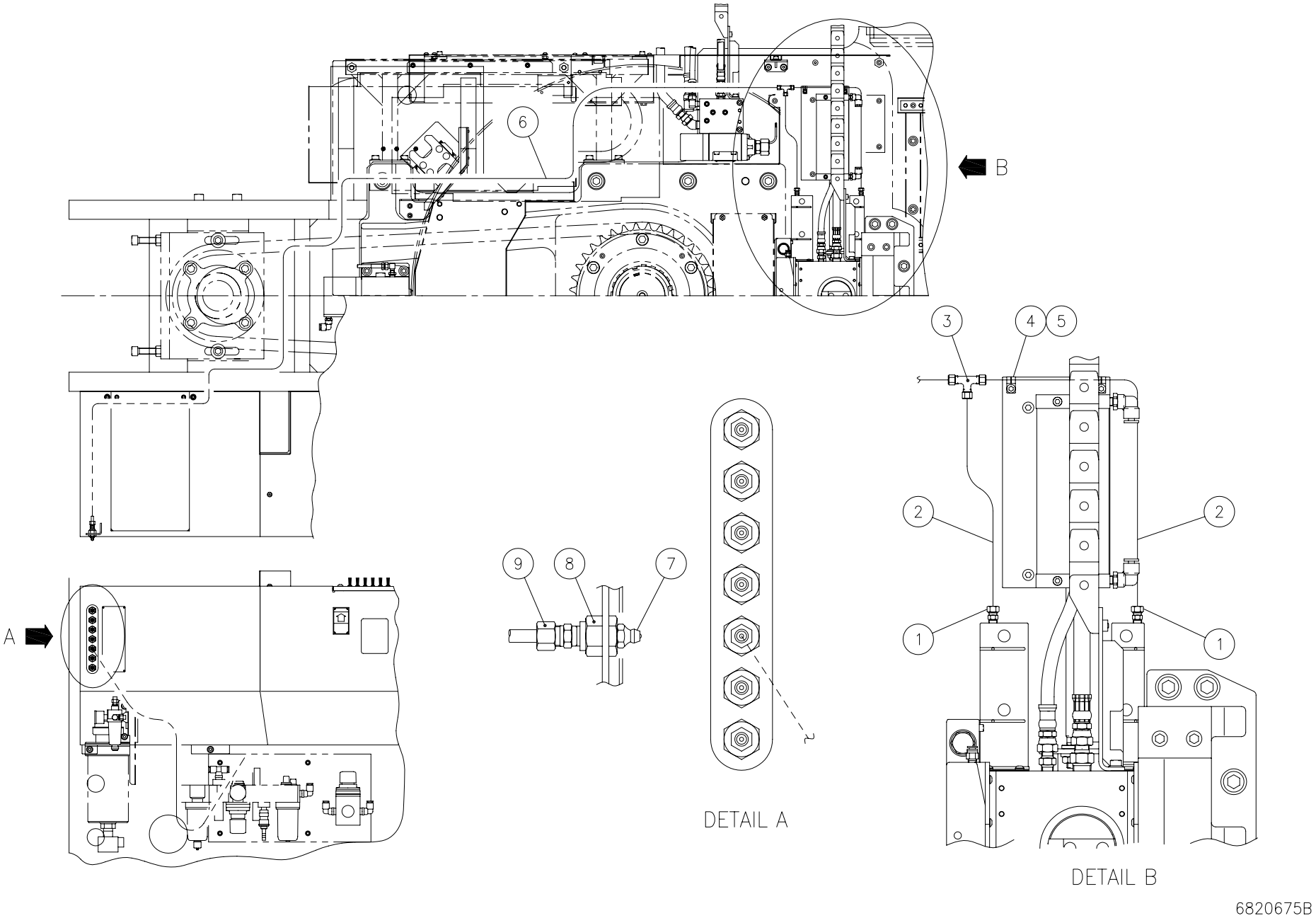
6
B
3
4
5
2
2
1
1
9
8
7
A
DETAIL A
DETAIL B
6820675B

From Serial No.36102001 and after

Index	Code	Parts Name	Drawing No.	Type	Maker	Q'ty	Note
1	74570523	Bite Type Pipe Fitting	P585538009	KC6-R1/8-B-1	IHARA Science	2	
2	74571467	Plastic Hose	P230223197	AS1100-06(Black)-0.45M	JUNKOSHA	2	
3	74570524	Bite Type Pipe Fitting	P585538010	KT6-B-1	IHARA Science	1	
4	74563689	Saddle For Conduct	P381017105	PZ0106(D6.2)	DAIWA DENGYO	2	
5	31183033	Hex Soc Cap Screw	P330220003	M6X10		2	
6	74571467	Plastic Hose	P230223175	AS1100-06(Black)-4M	JUNKOSHA	1	
7	74304826	Grease Nipple	P560600004	A-PT1/8		1	
8	36525551	Bite Type Pipe Fitting	P585555001	PF-1/8-1/8-BS	JUNKOSHA	1	
9	74570523	Bite Type Pipe Fitting	P585538009	KC6-R1/8-B-1	IHARA Science	1	

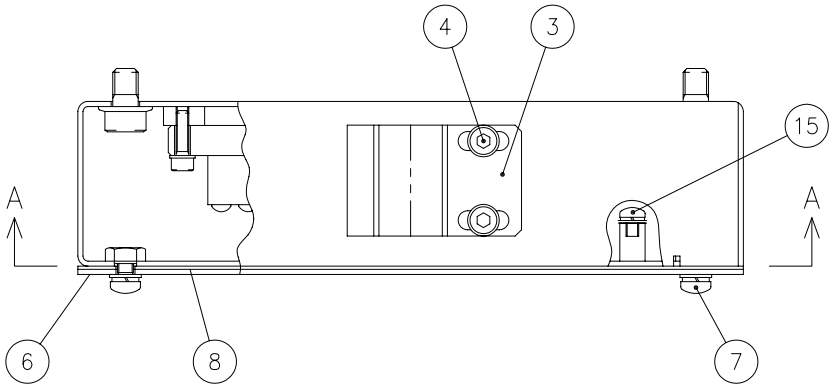

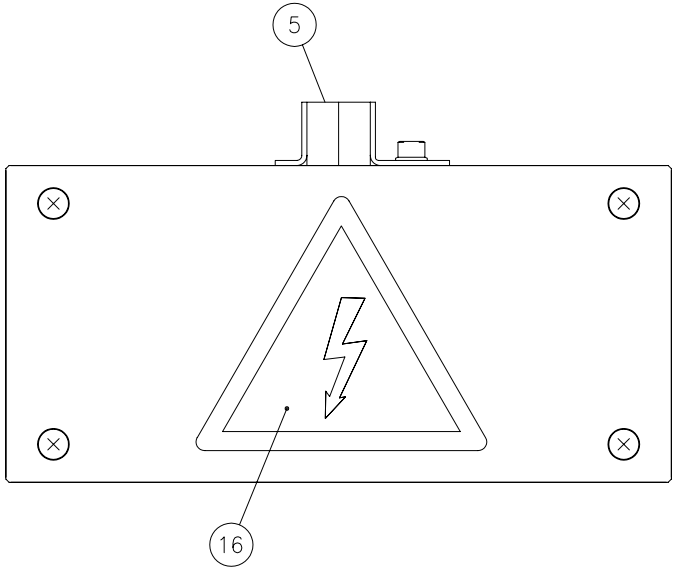

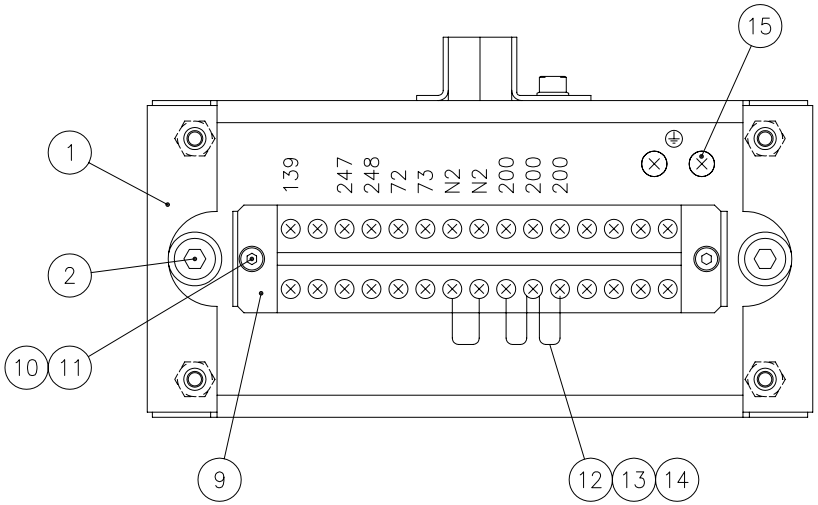

SECTION A–A

6872647

Unit No. 167

P&F(7) From Serial No.36102001 and after

Index	Code	Parts Name	Drawing No.	Type	Maker	Q'ty	Note
1	74570508	Relay Box (P&F)	6820537 A			1	
2	75420638	Flange Socket Bolt	P330468018	M8X12	NISSAN NEJI	2	
3	74570509	Cable Clamp	6820536			1	
4	74570510	Flange Socket Bolt	P330460006	M5X10		2	
5	74570511	Sponge Rubber	P230580073	CR-T20X20X35		2	
6	74570512	Relay Box Cover (P&F)	6820538 A			1	
7	74570033	Pan Head Screw with Washer	P334200134	M5X10(Chromate P-4)		4	
8	74570517	Packing (P&F)	6822897			1	
9	74569224	Block Terminal	P864002058	BTB15C15	IDEC	1	
10	86620301	Hex Soc Cap Screw	P330200018	M4X15		2	
11	71513636	Washer	P336000092	4(Regular Round)		2	
12	36389386	Vinyl Cord (P.V.C)	P342200872	KIV0.75X50(Blue)		3	
13	36389359	Solderless Terminal	P869204017	1.25-3	FUJI TANSHI	12	
14	36161582	Marker Tube	P869220210	1.25		12	
15	74569811	Pan Head Screw with Washer	P334200113	M4X6(Chromate P-4)		3	(Ground)
16	74379098	Charging Mark	P360200003	JISB6015-80H		1	

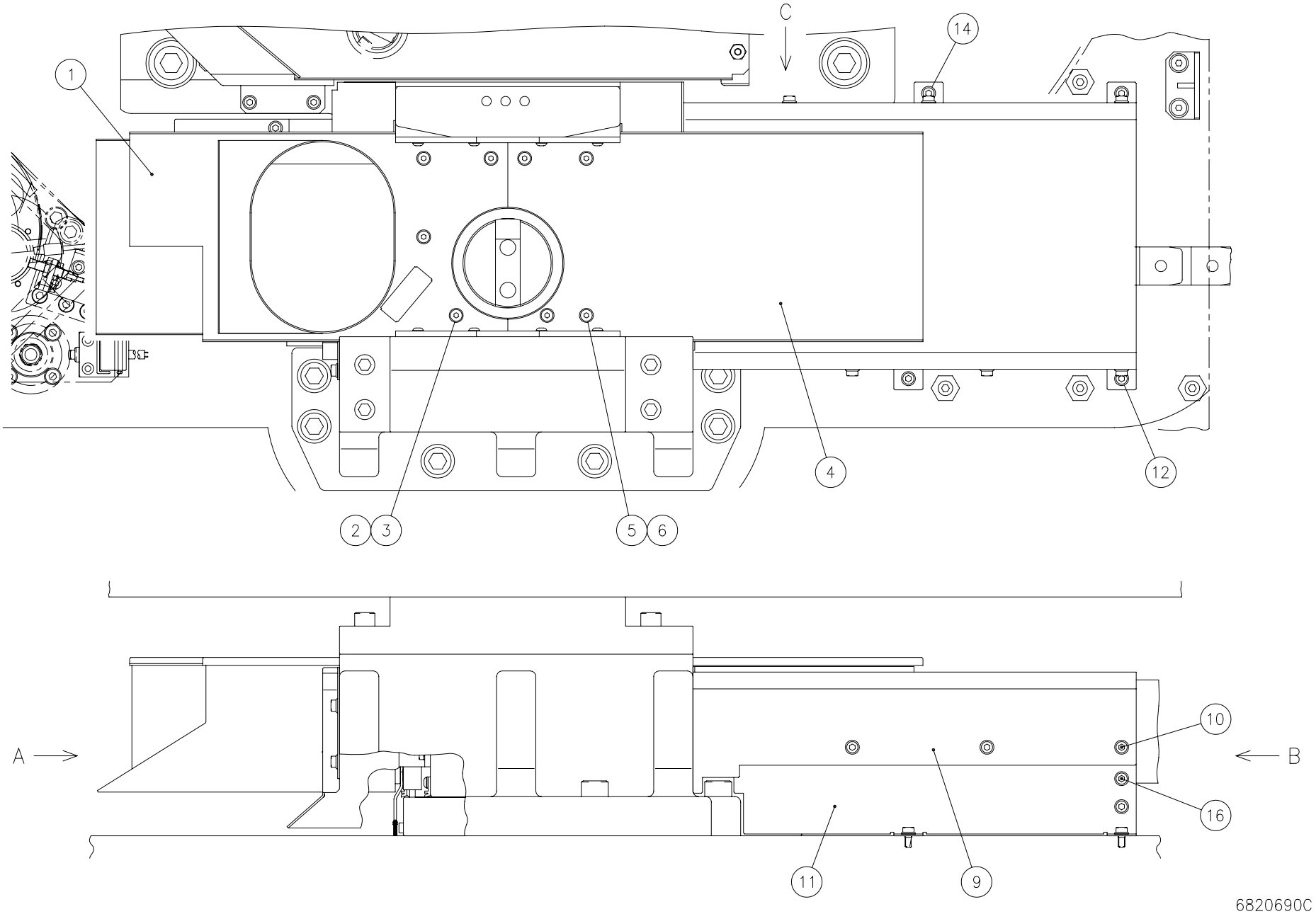
C
1
14
2
3
5
6
4
12
A
B
10
16
11
9
6820690C

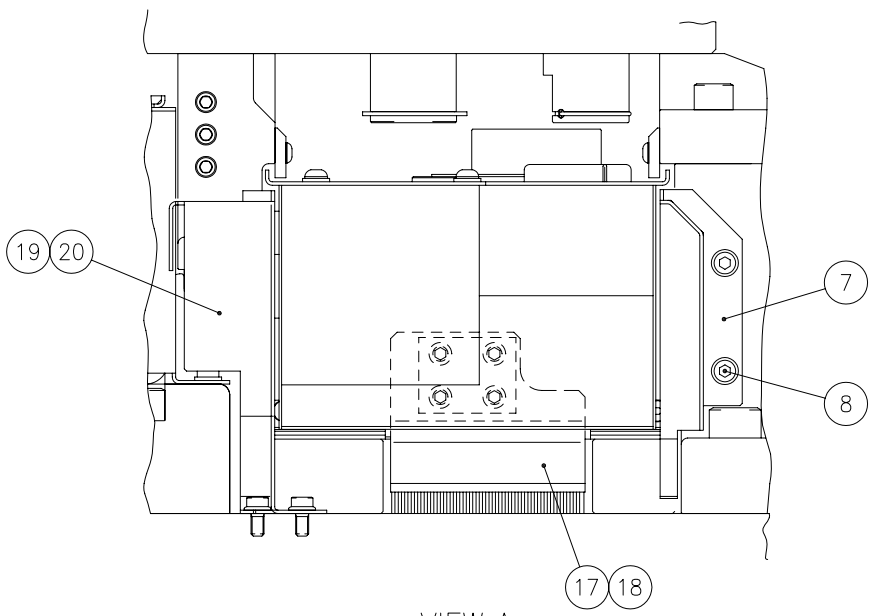

VIEW A

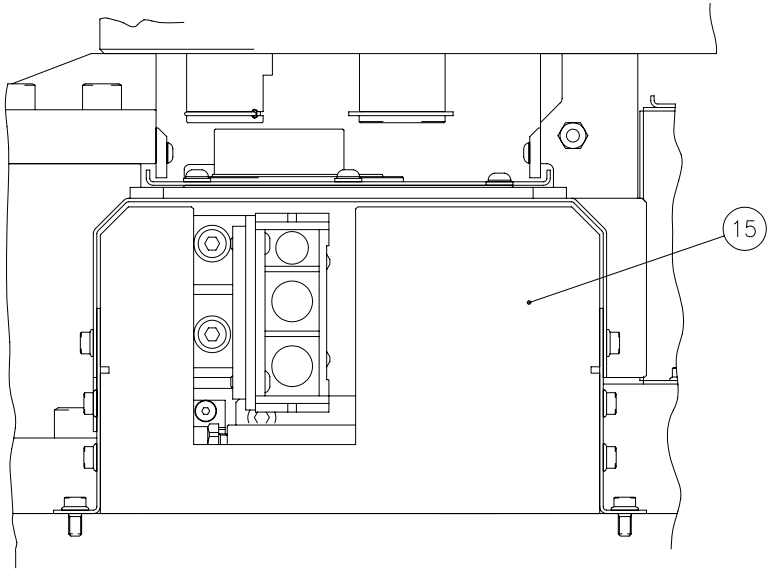

VIEW B

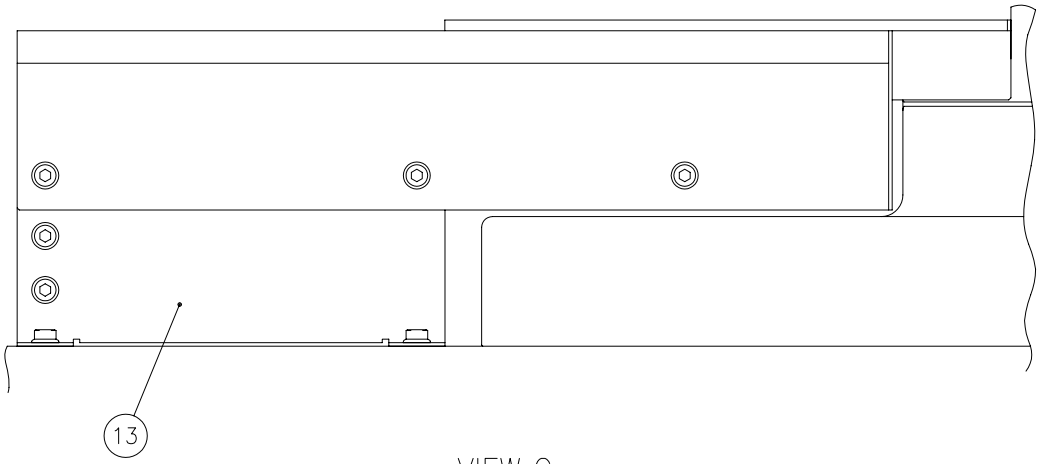

VIEW C

6820690C

From Serial No.36102001 and after

Index	Code	Parts Name	Drawing No.	Type	Maker	Q'ty	Note
1	74577618	Guide Pipe	6820692 B			1	
2	36379029	Button Head Screw	P334500013	M6X10		4	
3	79565419	Washer	P336000005	6(Regular Round)		4	
4	74570526	Scrap Cover Cap	6820683			1	
5	36379029	Button Head Screw	P334500013	M6X10		4	
6	79565419	Washer	P336000005	6(Regular Round)		4	
7	74577621	Scrap Cover (F1)	6817065			1	
8	75428708	Flange Socket Bolt	P330468015	M6X10	NISSAN NEJI	2	
9	74570529	Scrap Cover (R1)	6820686 A			1	
10	75428708	Flange Socket Bolt	P330468015	M6X10	NISSAN NEJI	6	
11	74570535	Scrap Cover (R2)	6820689			1	
12	75428708	Flange Socket Bolt	P330468015	M6X10	NISSAN NEJI	2	
13	74575062	Scrap Cover (R3)	6813705 B			1	
14	75428708	Flange Socket Bolt	P330468015	M6X10	NISSAN NEJI	2	
15	74570532	Scrap Cover (R4)	6820687 A			1	
16	75428708	Flange Socket Bolt	P330468015	M6X10	NISSAN NEJI	4	
17	74577619	Brush Scraper	6820694			1	
18	74701375	Button Head Screw	P334500032	M6X8		4	
19	74577620	Scrap Cover (F2)	6817066			1	

From Serial No.36102001 and after

Index	Code	Parts Name	Drawing No.	Type	Maker	Q'ty	Note
20	75428708	Flange Socket Bolt	P330468015	M6X10	NISSAN NEJI	2	

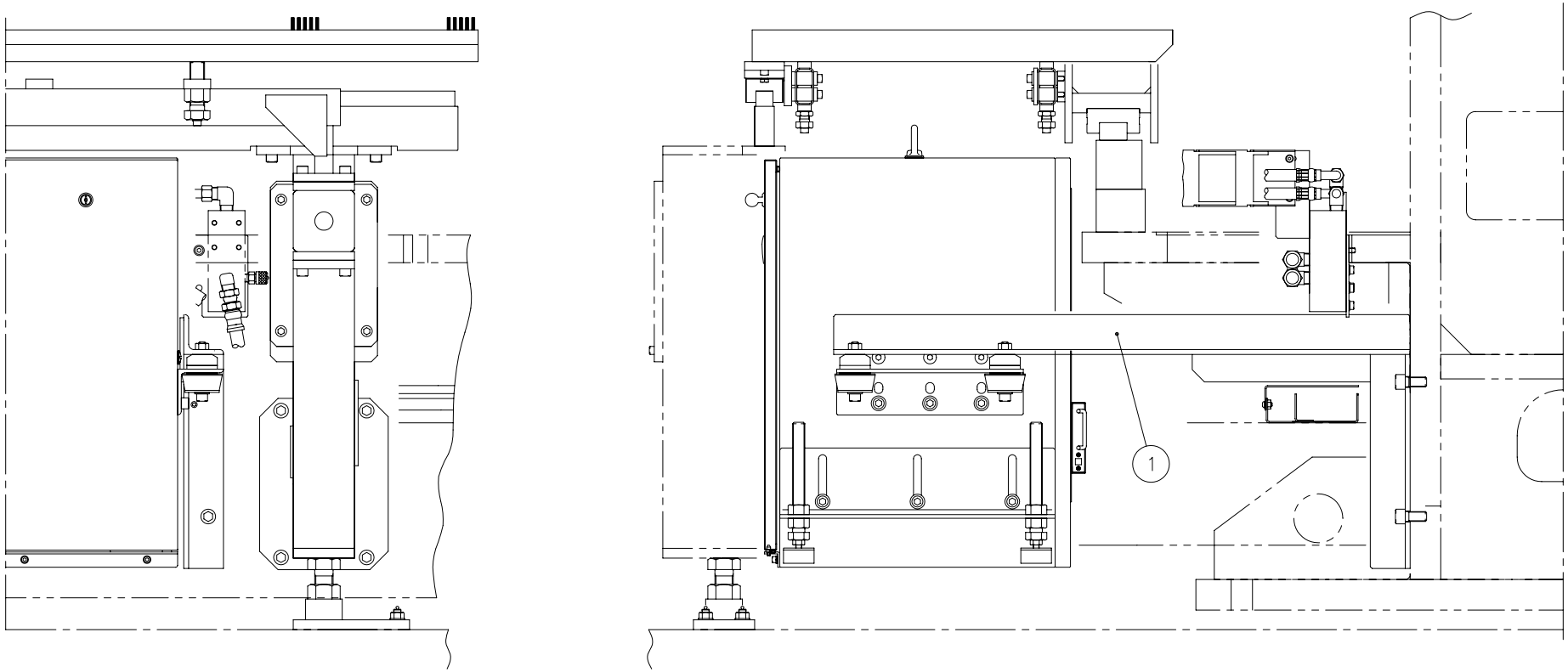

6875368

From Serial No.36102001 and after

Index	Code	Parts Name	Drawing No.	Type	Maker	Q'ty	Note
1	74419001	Amplifier Box Arm (R) PF	6872651	L65X65X8		1	

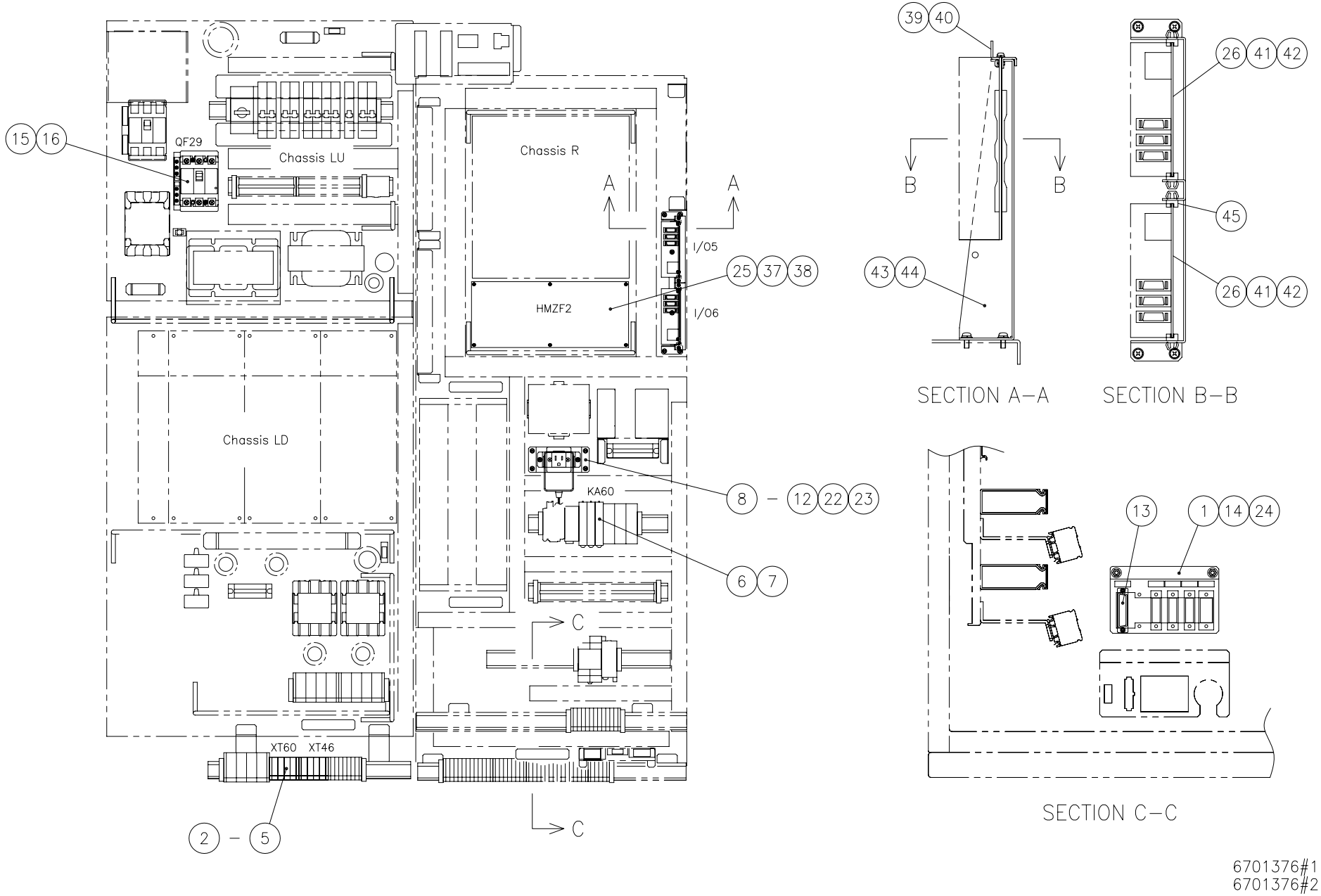
15 16
QF29
Chassis LU
Chassis R
A
A
I/O5
25 37 38
HMZF2
I/O6
Chassis LD
KA60
8 – 12 22 23
6 7
C
XT60 XT46
2 – 5
C
39 40
B
B
43 44
SECTION A–A
26 41 42
45
26 41 42
SECTION B–B
13
1 14 24
SECTION C–C
6701376#1
6701376#2

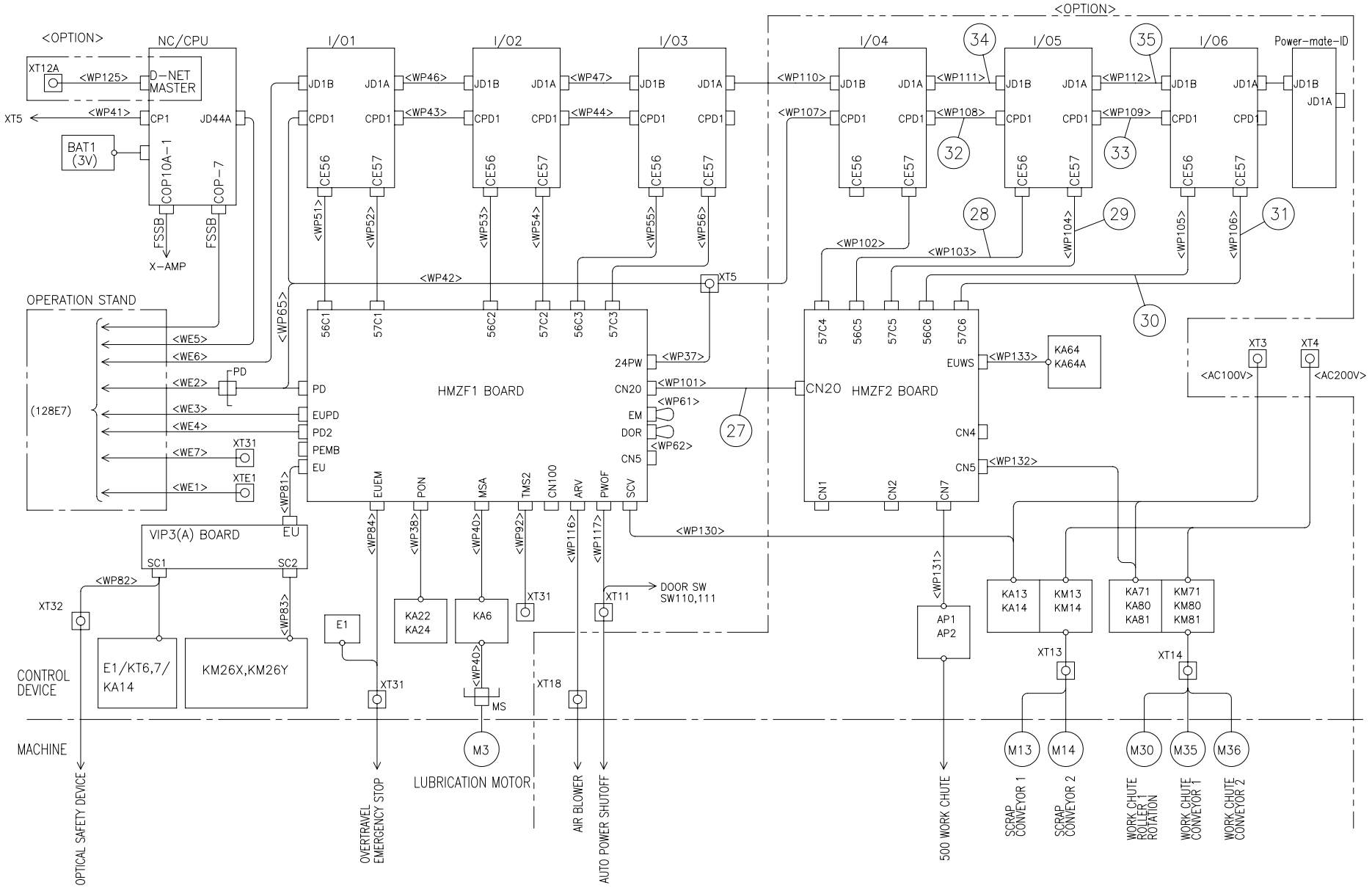
<OPTION>
NC/CPU
XT12A
<WP125>
D-NET MASTER
XT5
<WP41>
CP1
JD44A
BAT1 (3V)
COP10A-1
COP-7
FSSB
X-AMP
I/01
I/02
I/03
I/04
I/05
I/06
Power-mate-ID
JD1B
JD1A
CPD1
CE56
CE57
<WP46>
<WP47>
<WP43>
<WP44>
<WP110>
<WP111>
<WP112>
<WP107>
<WP108>
<WP109>
<WP51>
<WP52>
<WP53>
<WP54>
<WP55>
<WP56>
<WP102>
<WP103>
<WP104>
<WP105>
<WP106>
<WP42>
<WP65>
OPERATION STAND
(128E7)
<WE5>
<WE6>
<WE2>
<WE3>
<WE4>
<WE7>
<WE1>
PD
XT31
XTE1
56C1
57C1
56C2
57C2
56C3
57C3
HMZF1 BOARD
24PW
CN20
EM
DOR
CN5
EUPD
PD2
PEMB
EU
<WP37>
<WP101>
<WP61>
<WP62>
EUEM
PON
MSA
TMS2
CN100
ARV
PWOF
SCV
<WP81>
<WP84>
<WP38>
<WP40>
<WP92>
<WP116>
<WP117>
<WP130>
57C4
56C5
57C5
56C6
57C6
HMZF2 BOARD
EUWS
<WP133>
KA64
KA64A
CN4
<WP132>
CN1
CN2
CN7
XT3
XT4
<AC100V>
<AC200V>
VIP3(A) BOARD
SC1
SC2
<WP82>
<WP83>
XT32
E1/KT6,7/KA14
KM26X,KM26Y
E1
KA22
KA24
KA6
XT31
XT11
DOOR SW
SW110,111
XT18
MS
M3
LUBRICATION MOTOR
<WP131>
AP1
AP2
KA13
KA14
KM13
KM14
KA71
KA80
KA81
KM71
KM80
KM81
XT13
XT14
M13
M14
M30
M35
M36
CONTROL DEVICE
MACHINE
OPTICAL SAFETY DEVICE
OVERTRAVEL EMERGENCY STOP
AIR BLOWER
AUTO POWER SHUTOFF
500 WORK CHUTE
SCRAP CONVEYOR 1
SCRAP CONVEYOR 2
WORK CHUTE ROLLER 1 ROTATION
WORK CHUTE CONVEYOR 1
WORK CHUTE CONVEYOR 2
27
28
29
30
31
32
33
34
35
670779126

From Serial No.36102001 and after

Index	Code	Parts Name	Drawing No.	Type	Maker	Q'ty	Note
1	74417737	Nut	P332238005	M5(Chromate)	SANKO Industry	2	
2	36386030	Block Terminal	P864002031	BN30W	IDEC	4	
3	36386046	Terminal Parts	P864052021	BNE30W	IDEC	2	
4	44618320	Terminal Label	P864072028	BNM7(50)	IDEC	1	
5	36389437	Terminal Cover	P864062090	BNC230(60)	IDEC	1	
6	74561284	Control Relay	P800002017	G2R-2-SND-DC24V	OMRON	1	
7	71516149	Relay Socket	P800082017	P2RF-08-E	OMRON	1	Accessory For Control Relay
8	74577525	Pan Head Screw with Washer	P334200183	M4X10(Chromate P-3)		4	
9	74577525	Pan Head Screw with Washer	P334200183	M4X10(Chromate P-3)		2	
10	36162904	Adapter Cushion	6802476			1	
11	55140479	Plug Socket	P862028005	WK3001	MATSUSHITA	1	
12	79571714	Flat Head Screw	P334110009	M4X12		2	
13	74419002	Adapter	P618148004	RC-52A	RA SYSTEMS	1	
14	36541317	Push Rivet	P339308008	P3555B	SHINAGAWA	8	
15	74417650	Accessory(Low Voltage Breaker)	P812094037	BZ6TSH10C3	FUJI Electric	1	
16	74418096	Low Voltage Breaker	P812004125	EA33AC/30W with Terminal Block	FUJI Electric	1	
17	74419003	WP161	670285361			1	List Only
18	74419004	WP162	670285362			1	List Only
19	74419005	WP163	670285363			1	List Only

Index	Code	Parts Name	Drawing No.	Type	Maker	Q'ty	Note
20	74419006	WP164	670285364			1	List Only
21	74419007	WP165	670285365			1	List Only
22	74419445	Plug Socket Bracket	6705910 A			1	
23	74419009	Adapter Support	6705911			1	
24	74418042	CN Bracket (3510)	6705912			1	
25	74577622	HMZF2 Board	6702384 A	B6201C-HMZF2-000		1	
26	71369424	Accessory (Program Controller)	P767485288	A20B-2002-0521	FANUC	2	IO5,6
27	74418951	WP101	670285301			1	
28	74419010	WP103	670285303			1	
29	74419011	WP104	670285304			1	
30	74419012	WP105	670285305			1	
31	74419013	WP106	670285306			1	
32	74419014	WP108	670285308			1	
33	74419015	WP109	670285309			1	
34	74418939	WP111	670285311			1	
35	74419016	WP112	670285312			1	
36	74418067	OP Bracket (1)	6705678 A			1	List Only
37	74575020	Pan Head Screw with Washer	P334200144	M3X6(Chromate P-4)		5	
38	74417688	Pan Head Screw with Washer	P334200173	M3X6(NickelP-4)		1	

From Serial No.36102001 and after

Index	Code	Parts Name	Drawing No.	Type	Maker	Q'ty	Note
39	74416178	Stay (for I/O)	6702652 B			1	
40	74577588	Pan Head Screw with Washer	P334200182	M3X8(Chromate P-3)		2	
41	74417688	Pan Head Screw with Washer	P334200173	M3X6(NickelP-4)		1	
42	74575020	Pan Head Screw with Washer	P334200144	M3X6(Chromate P-4)		2	
43	74416177	I/O Bracket	6702651			1	
44	74577525	Pan Head Screw with Washer	P334200183	M4X10(Chromate P-3)		6	
45	74417687	Stay For Board	P870078003	G-1070	NICS	1	

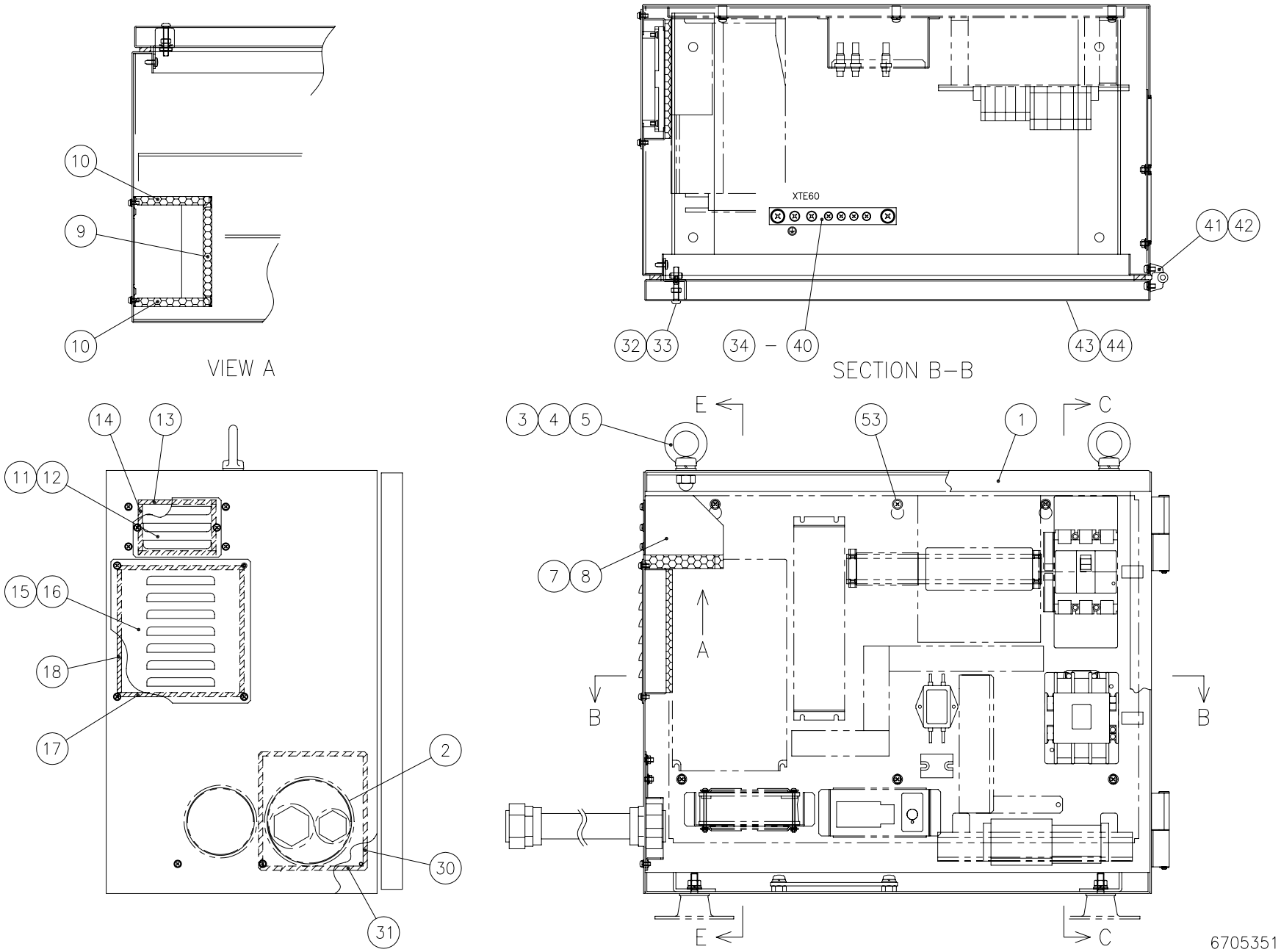
10
9
10
VIEW A
XTE60
41 42
32 33
34 – 40
43 44
SECTION B–B
14
13
11 12
15 16
18
17
2
30
31
3 4 5
E
53
1
C
7 8
A
B
B
E
C
6705351

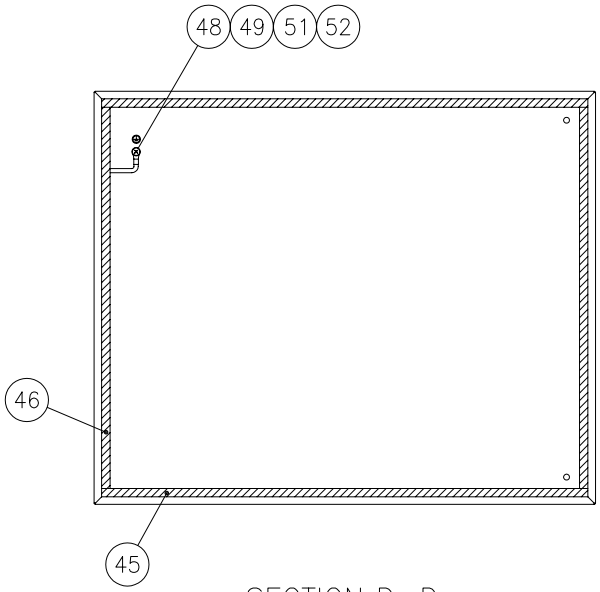

SECTION D–D

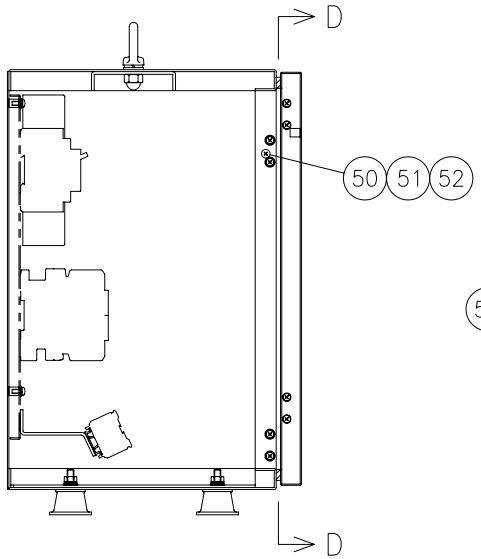

SECTION C–C

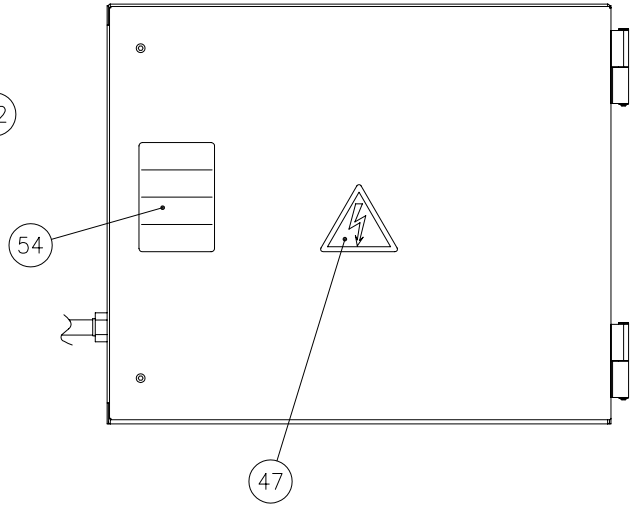

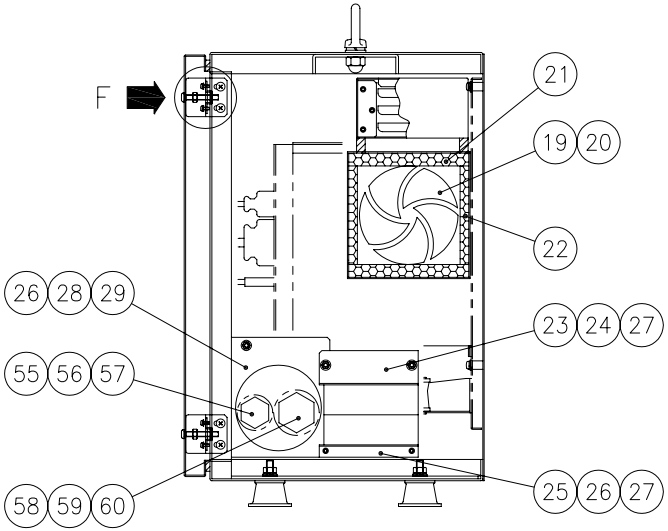

SECTION E–E

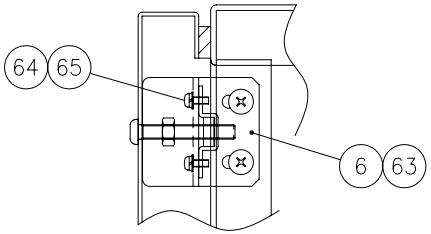

DETAIL F

6705351

From Serial No.36102001 and after

Index	Code	Parts Name	Drawing No.	Type	Maker	Q'ty	Note
1	74419017	P&F Box	6705096 A			1	
2	71377705	Grommet	P229125051	KG-016	KITAGAWA	1	
3	74419018	Eye-Bolt	P338000012	M12(Chromate)		2	
4	71365039	Washer	P336000065	12(Polished Round)		2	
5	86610819	Spring Washer	P336050008	12		2	
6	74577573	Pan Head Screw	P335030013	Bind-Type-2-5X12(Chromate)		4	
7	74418071	Fan Duct (P&F)	6705964			1	
8	31201060	Pan Head Screw with Washer	P334200166	M4X10(Black Chromate P-3)		4	
9	74418072	Fan Duct Packing (L)	6705973 A			1	
10	74418073	Fan Duct Packing (S)	6705974 B			2	
11	74419019	Cover B P&F (CE)	6705101			1	
12	31201060	Pan Head Screw with Washer	P334200166	M4X10(Black Chromate P-3)		2	
13	74574770	EMI Shield	P869518059	UC-3E0689-0.095M	KITAGAWA	2	
14	74574770	EMI Shield	P869518026	UC-3E0689-0.055M	KITAGAWA	2	
15	74419022	Cover T P&F (CE)	6705100			1	
16	31201060	Pan Head Screw with Washer	P334200166	M4X10(Black Chromate P-3)		4	
17	74574770	EMI Shield	P869518069	UC-3E0689-0.15M	KITAGAWA	2	
18	74574770	EMI Shield	P869518068	UC-3E0689-0.145M	KITAGAWA	2	
19	74418076	Accessory For Fan	P538078027	9450-F	SEEDS	1	

Index	Code	Parts Name	Drawing No.	Type	Maker	Q'ty	Note
20	10457023	Flat Head Screw	P334110007	M4X8		4	
21	74418077	P&F Box Packing (L)	6705971			2	
22	74418078	P&F Box Packing (S)	6705972			2	
23	74419024	Wire Support U	6705102			1	
24	74417737	Nut	P332238005	M5(Chromate)	SANKO Industry	2	
25	74419025	Wire Support D	6705103			1	
26	74417512	Pan Head Screw with Washer	P334200196	M5X12(Black Chromate P-3)		3	
27	74419026	Wire Cushion S (P&F)	6705104			2	
28	74419027	Flexible Plate P&F	6705105 A			1	
29	74417737	Nut	P332238005	M5(Chromate)	SANKO Industry	1	
30	74574770	EMI Shield	P869518065	UC-3E0689-0.128M	KITAGAWA	2	
31	74574770	EMI Shield	P869518066	UC-3E0689-0.13M	KITAGAWA	1	
32	74418837	Button Head Screw	P334500092	M6X40(Black Chromate)		2	
33	79573514	Nut	P332000071	M6(Type-1)		1	
34	74419029	Ground Bar FE(P&F)	6705106			1	
35	74417506	Pan Head Screw with Washer	P334200192	M8X16(Chromate P-3)		2	
36	74417620	Pan Head Screw	P334100131	M6X12(Nickel)		2	
37	74417507	Spring Washer	P336050041	6(Nickel)		2	
38	74417641	Washer	P336000102	6(Polished Round)-Nickel		2	

Index	Code	Parts Name	Drawing No.	Type	Maker	Q'ty	Note
39	31201049	Pan Head Screw with Washer	P334208003	M5X12(NickelP-4for Thin Board)	SANKO Industry	4	
40	74562006	Ground Mark	6800994	S500288		1	
41	75429407	Hinge	6800745 A			2	
42	74570033	Pan Head Screw with Washer	P334200134	M5X10(Chromate P-4)		4	
43	74419030	Door P&F	6705097			1	
44	74570033	Pan Head Screw with Washer	P334200134	M5X10(Chromate P-4)		4	
45	74575391	EMI Shield	P869518158	UC-300279-0.597M	KITAGAWA	2	
46	74575391	EMI Shield	P869518108	UC-300279-0.441M	KITAGAWA	2	
47	74379098	Charging Mark	P360200003	JISB6015-80H		1	
48	74568791	Ground Wire	P342718001	FGM-200-M5	KITAGAWA	1	
49	74417639	Pan Head Screw with Washer	P334200169	M5X12(Chromate P-3)		1	
50	74577573	Pan Head Screw	P335030013	Bind-Type-2-5X12(Chromate)		1	
51	74417599	Toothed Washer	P336030021	A-5(Chromate)		2	
52	74562006	Ground Mark	6800994	S500288		2	
53	74417639	Pan Head Screw with Washer	P334200169	M5X12(Chromate P-3)		6	
54	74417591	Legend Plate 1 (Caution)	680012701A			1	
55	74419032	Accessory For Conduit	P866088046	BGTN-2120	Captain Industries	2	
56	74419033	Accessory For Conduit	P866088044	BTNO-P2120	Captain Industries	2	
57	74419034	Flexible Conduit	P869028037	PPCO-20B-7M	Captain Industries	1	

From Serial No.36102001 and after

Index	Code	Parts Name	Drawing No.	Type	Maker	Q'ty	Note
58	74419035	Accessory For Conduit	P866088017	BTNO-P2923	Captain Industries	2	
59	74419036	Accessory For Conduit	P866088018	BGTN-P2923	Captain Industries	2	
60	74419037	Flexible Conduit	P869028038	PPCO-23B-7M	Captain Industries	1	
61	74419038	Accessory For Servo Amplifier	P767118033	JUSP-OP02A-2	YASUKAWA	1	List Only
62	74419039	Accessory For Servo Amplifier	P767118034	JZSP-CMS00-3	YASUKAWA	1	List Only
63	74419040	Latch Nut Bracket (4)	6705159			2	
64	74419041	Pan Head Screw with Washer	P334200203	M3X10(P-3)		4	
65	74419042	Retaining Plate	P317462010	C-176-A-2	TAKIGEN	2	

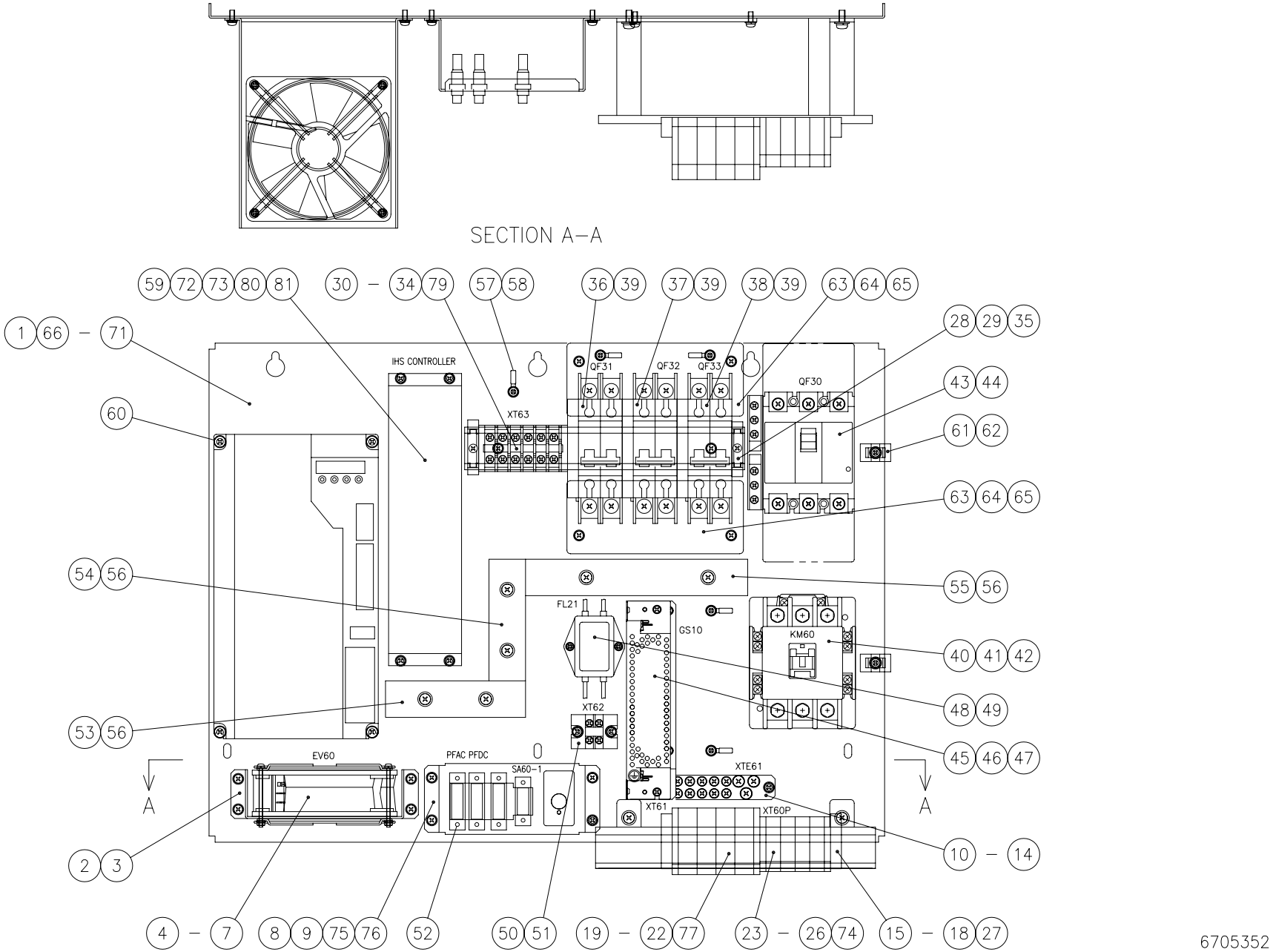
SECTION A–A
IHS CONTROLLER
QF31
QF32
QF33
QF30
XT63
FL21
GS10
KM60
XT62
EV60
PFAC PFDC
SA60–1
XTE61
XT61
XT60P
A
A
59 72 73 80 81
30 – 34 79
57 58
36 39
37 39
38 39
63 64 65
1 66 – 71
28 29 35
43 44
60
61 62
63 64 65
54 56
55 56
40 41 42
48 49
53 56
45 46 47
2 3
10 – 14
4 – 7
8 9 75 76
52
50 51
19 – 22 77
23 – 26 74
15 – 18 27
6705352

From Serial No.36102001 and after

Index	Code	Parts Name	Drawing No.	Type	Maker	Q'ty	Note
1	74419043	Chassis P&F (CE)	6705098 A			1	
2	74418089	Fan Bracket (P&F)	6705969			1	
3	74577525	Pan Head Screw with Washer	P334200183	M4X10(Chromate P-3)		4	
4	74565737	Fan	P538002028	109S078UL	SANYO Electric	1	
5	74568782	Finger Guard	P538072015	109-019E	SANYO Electric	2	Accessory For Fan
6	74417510	Pan Head Screw with Washer	P334200209	M3X50(Chromate P-3)		4	
7	74417514	Nut	P332238003	M3(Chromate)	SANKO Industry	4	
8	74419044	Connector Bracket L (P&F)	6705099 A			1	
9	74577525	Pan Head Screw with Washer	P334200183	M4X10(Chromate P-3)		4	
10	74418622	Ground Bar (5)	6701354			1	
11	74577525	Pan Head Screw with Washer	P334200183	M4X10(Chromate P-3)		2	
12	31201049	Pan Head Screw with Washer	P334208003	M5X12(NickelP-4for Thin Board)	SANKO Industry	3	
13	31201136	Pan Head Screw with Washer	P334208002	M4X10(NickelP-4for Thin Board)	SANKO Industry	12	
14	74562006	Ground Mark	6800994	S500288		1	
15	74419045	Terminal Parts	P864058074	S-3	KAMEDA Electric	2	
16	74417639	Pan Head Screw with Washer	P334200169	M5X12(Chromate P-3)		2	
17	74567187	Terminal Base	P864032040	BAA1000(225)	IDEC	1	
18	74577525	Pan Head Screw with Washer	P334200183	M4X10(Chromate P-3)		2	
19	73158664	Block Terminal	P864002028	BN50W	IDEC	4	

From Serial No.36102001 and after

Index	Code	Parts Name	Drawing No.	Type	Maker	Q'ty	Note
20	74568187	Terminal Parts	P864052022	BNE50W	IDEC	2	Terminal Parts
21	74418091	Terminal Cover	P864062160	BNC320(72)	IDEC	1	
22	74418092	Terminal Label	P864072092	BNM7(62)	IDEC	1	
23	36386030	Block Terminal	P864002031	BN30W	IDEC	4	
24	36386046	Terminal Parts	P864052021	BNE30W	IDEC	2	
25	74418014	Terminal Cover	P864062118	BNC230(58)	IDEC	1	
26	74418236	Terminal Label	P864072085	BNM7(48)	IDEC	1	
27	74342638	Terminal Parts	P864052008	BNL6	IDEC	2	
28	74418093	Terminal Base	P864032140	BAA1000(190)	IDEC	1	
29	74577525	Pan Head Screw with Washer	P334200183	M4X10(Chromate P-3)		2	
30	36386030	Block Terminal	P864002031	BN30W	IDEC	6	
31	36386046	Terminal Parts	P864052021	BNE30W	IDEC	2	
32	74417665	Terminal Parts	P864052044	BNJ56F	IDEC	1	
33	74417675	Terminal Cover	P864062121	BNC230(74)	IDEC	1	
34	74419046	Terminal Label	P864072095	BNM7(65)	IDEC	1	
35	74342638	Terminal Parts	P864052008	BNL6	IDEC	2	
36	74418609	Low Voltage Breaker	P812128172	60261	SCHNEIDER	1	
37	74419047	Low Voltage Breaker	P812128170	60251	SCHNEIDER	1	
38	74418606	Low Voltage Breaker	P812128171	60252	SCHNEIDER	1	

From Serial No.36102001 and after

Index	Code	Parts Name	Drawing No.	Type	Maker	Q'ty	Note
39	74419048	Accessory(Low Voltage Breaker)	P812198004	26925	SCHNEIDER	3	
40	74418095	Electro-Magnetic Contactor	P810004086	SC-N2S/T-AC100V	FUJI Electric	1	
41	71376127	Coil Surge Absorption Unit	P810014043	SZ-Z35	FUJI Electric	1	Accessory For Contactor
42	74417689	Pan Head Screw with Washer	P334200176	M4X16(Chromate P-4)		2	
43	74418096	Low Voltage Breaker	P812004125	EA33AC/30W with Terminal Block	FUJI Electric	1	
44	71501164	Accessory(Low Voltage Breaker)	P812094063	BZ6TBH10C3	FUJI Electric	1	
45	74419049	Power Supply Bracket	6705353			1	
46	74419050	Switching Power Supply	P772123042	LDA30F-24-SN	COSEL	1	
47	74577588	Pan Head Screw with Washer	P334200182	M3X8(Chromate P-3)		4	
48	74418098	Noise Filter	P840048032	MBW-12R5-22	DENSEI-LAMBDA	1	
49	74577588	Pan Head Screw with Washer	P334200182	M3X8(Chromate P-3)		2	
50	74418099	Block Terminal	P864004033	TSU-615-2P	KIMDEN	1	
51	74570030	Pan Head Screw with Washer	P334200115	M4X10(Chromate P-4)		2	
52	36541317	Push Rivet	P339308008	P3555B	SHINAGAWA	6	
53	74419051	Duct For Wiring	P869508503	RD-38(L=115) Type-I	SANYO Electric	1	
54	74419052	Duct For Wiring	P869508531	RD-38(L=100) Type-I	SANYO Electric	1	
55	74419053	Duct For Wiring	P869508414	RD-38(L=185) Type-I	SANYO Electric	1	
56	74417639	Pan Head Screw with Washer	P334200169	M5X12(Chromate P-3)		6	
57	74577525	Pan Head Screw with Washer	P334200183	M4X10(Chromate P-3)		5	

Index	Code	Parts Name	Drawing No.	Type	Maker	Q'ty	Note
58	74417594	Cable Band	P381058122	CS-7	SHINAGAWA	5	
59	74577525	Pan Head Screw with Washer	P334200183	M4X10(Chromate P-3)		4	
60	74417639	Pan Head Screw with Washer	P334200169	M5X12(Chromate P-3)		4	
61	74577525	Pan Head Screw with Washer	P334200183	M4X10(Chromate P-3)		2	
62	31184309	Cable Band	P381058076	TC-142	KITAGAWA	2	
63	74418611	Strut Parts	P631408113	BS-455	HIROSUGI	4	
64	74419054	CP Cover	6705094 A			2	
65	74577525	Pan Head Screw with Washer	P334200183	M4X10(Chromate P-3)		4	
66	74419055	WP201	670510701			1	
67	74419056	WP203	670510703			1	
68	74419057	WP205	670510705			1	
69	74419058	WP206	670510706			1	
70	74419059	WP207	670510707A			1	
71	74419060	WP208	670510708			1	
72	74419446	WPF1	670504901A			1	
73	74419447	WPF422	670504902A			1	
74	74419448	WPFPW	670504903A			1	
75	74419449	WPFAC	670504904A			1	
76	74419450	WPFDC	670504905A			1	

From Serial No.36102001 and after

Index	Code	Parts Name	Drawing No.	Type	Maker	Q'ty	Note
77	74419545	WPFM	670504906B			1	
78	74419546	WSA60	670504907A			1	List Only
79	74419451	Cable (Q10)	670504908A			1	
80	74419069	Servo Drive Pack (Cable)	6708398	YSD2-B-44A44-16-HB-1051	YUKEN	1	
81	74419452	Cable (P&F)	6705049			1	

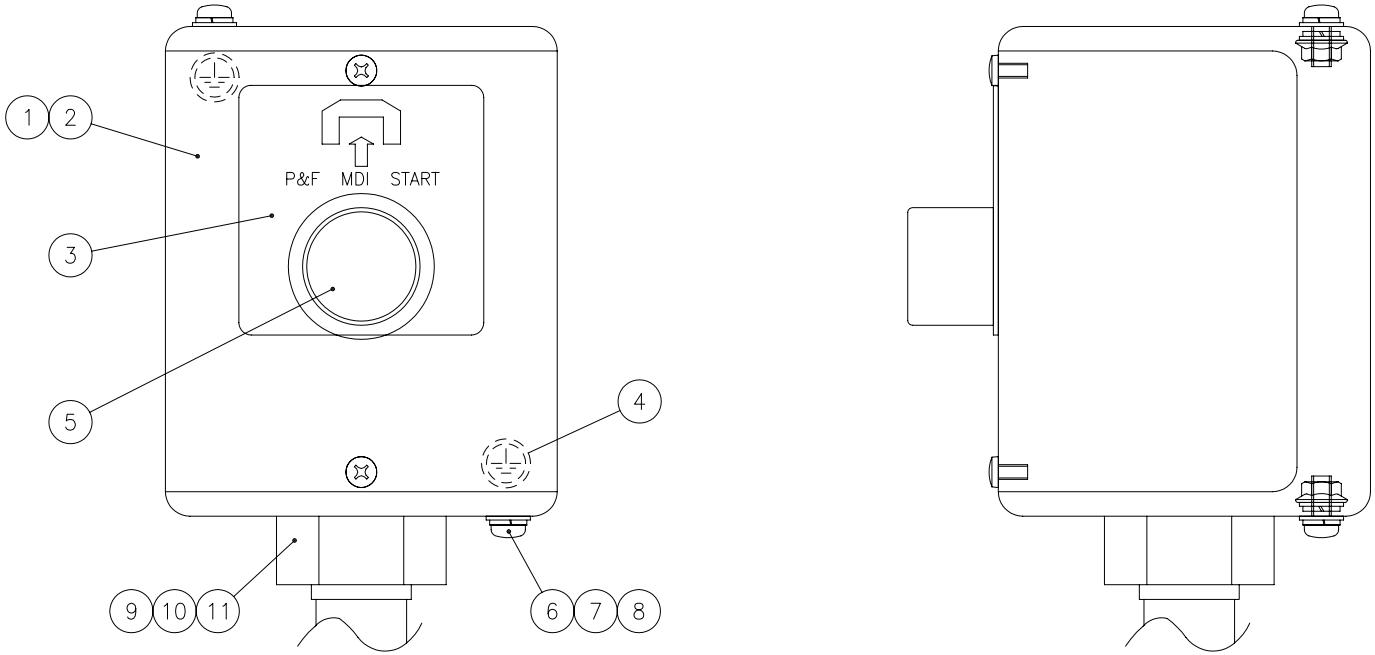

6705355

From Serial No.36102001 and after

Index	Code	Parts Name	Drawing No.	Type	Maker	Q'ty	Note
1	74419070	Accessory For Switch	P821806017	KGNW111Y	IDEC	1	
2	74419071	Operating Box	6705109			1	
3	74419453	Legend Plate (Switch) EXP	6705144			1	EXP
3	74419072	Legend Plate (Switch) CE	6705095			1	CE
4	74562006	Ground Mark	6800994	S500288		1	
5	74419073	Push Switch	P821084159	AR22G2R-11W	FUJI Electric	1	
6	74383617	Toothed Washer	P336030002	B-4		2	
7	74578658	Washer	P336000105	4(Polished Round)-Chromate		2	
8	74417514	Nut	P332238003	M3(Chromate)	SANKO Industry	2	
9	74419074	Accessory For Conduit	P866088045	BGTN-1314	Captain Industries	2	
10	74419075	Accessory For Conduit	P866088043	BTNO-P1314	Captain Industries	2	
11	74419076	Flexible Conduit	P869028039	PPCO-14B-2M	Captain Industries	1	

From Serial No.36102001 and after

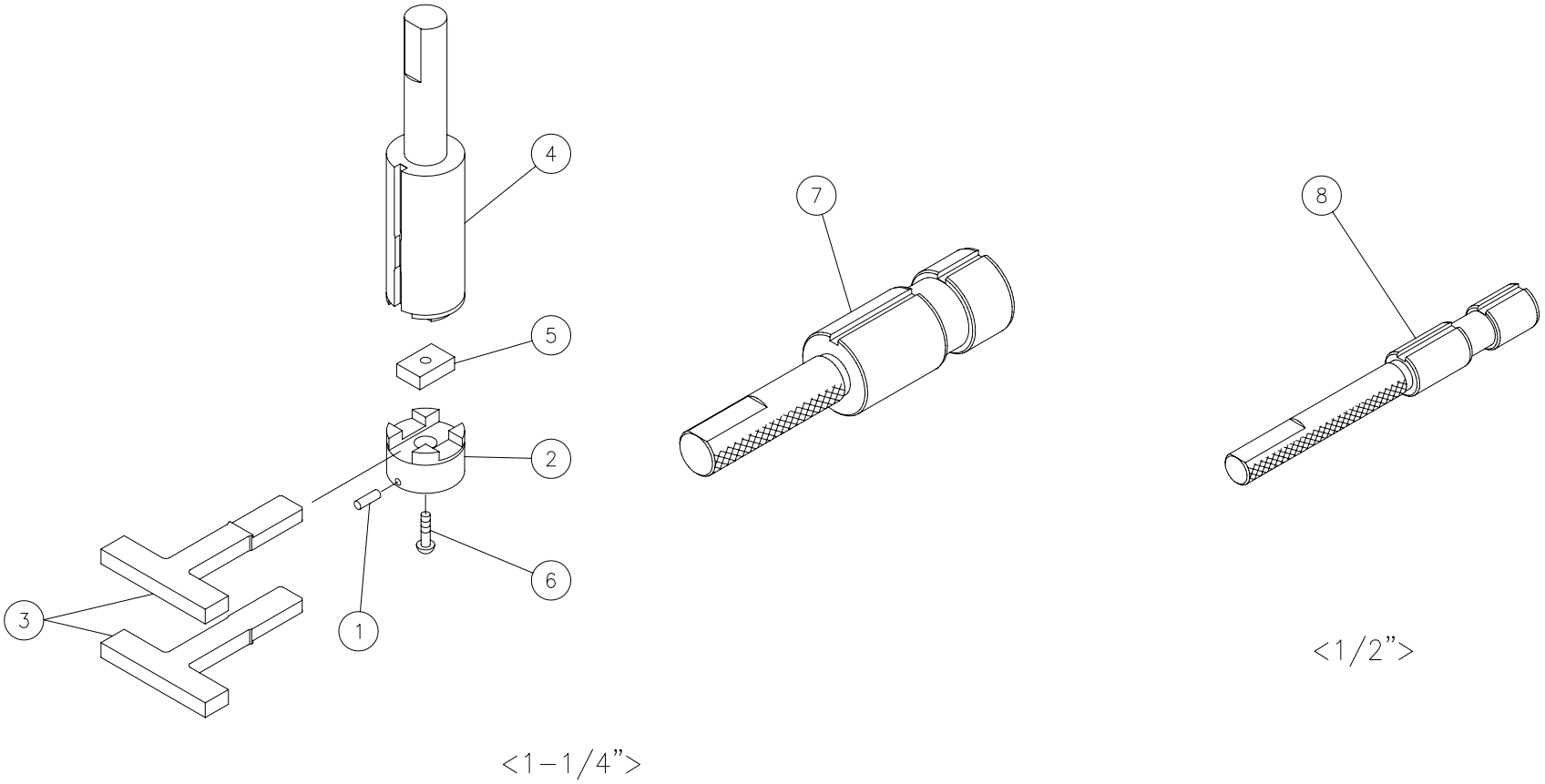

6048533
6814475
6814476

Unit No. 174

Jig (S)

From Serial No.36102001 and after

Index	Code	Parts Name	Drawing No.	Type	Maker	Q'ty	Note
1	74561729	Die Key	5550138 A			1	
2	74568255	Die Jig	0827039 A			1	
3	74568256	T-type Jig	0822261 C			2	
4	74568257	Punch Jig	0827037 A			1	
5	74568258	Key	0827038 A			1	
6	74314603	Button Head Screw	P334500016	M6X20		1	
7	74353213	Jig (Outer 1-1/4")	0480918 B			1	
8	74353214	Jig	0480919 B			1	

From Serial No.36102001 and after

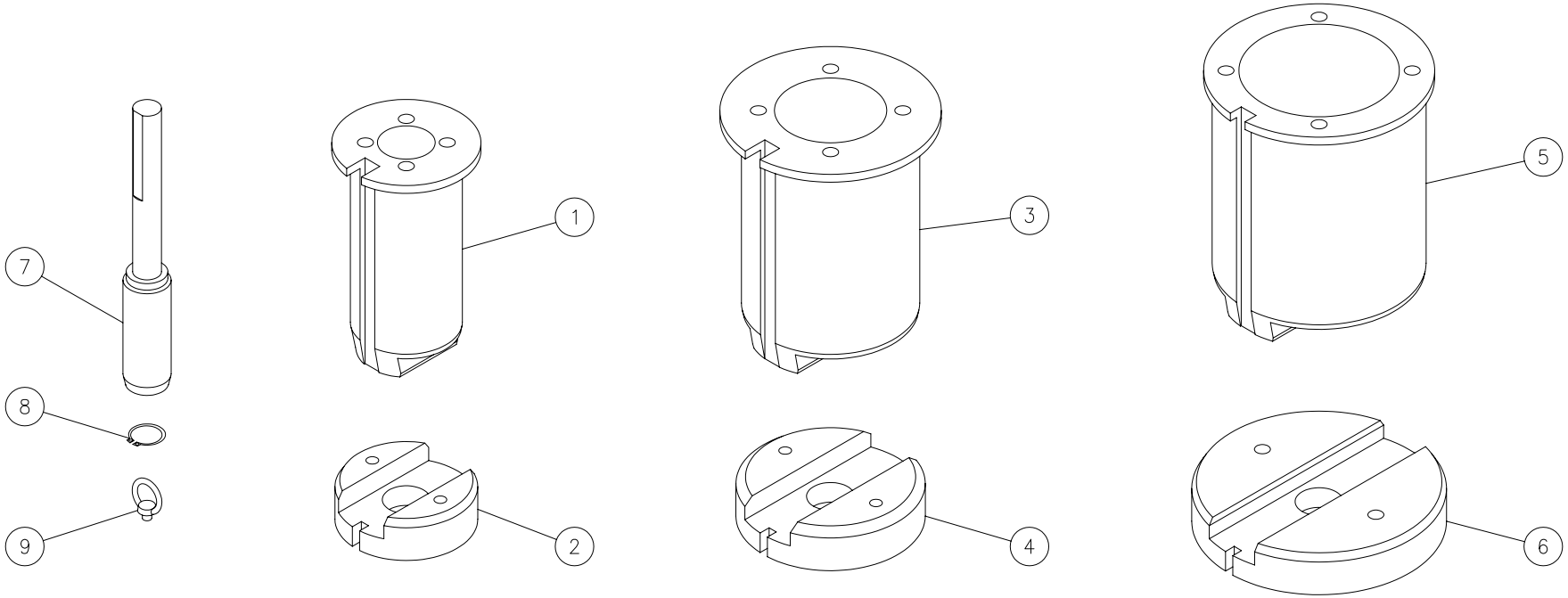

<2”> <3−1/2”> <4−1/2”>

6812675
6812679
6812683

Unit No. 175

Jig (L)

From Serial No.36102001 and after

Index	Code	Parts Name	Drawing No.	Type	Maker	Q'ty	Note
1	74570670	2" Punch Gauge	6812677			1	
2	74713163	2" Die Gauge	0827333			1	
3	74570671	3-1/2" Punch Gauge	6812681			1	
4	74713164	3-1/2" Die Gauge	0827338			1	
5	74570672	4-1/2" Punch Gauge	6812685			1	
6	74713165	4-1/2" Die Gauge	0827343			1	
7	74571501	Locating Pin	0827334 A			1	
8	74571502	Locating Snap Ring	P406108150	STW-26	OCHIAI	1	
9	79316339	Eye-Bolt	P338000002	M10		2	

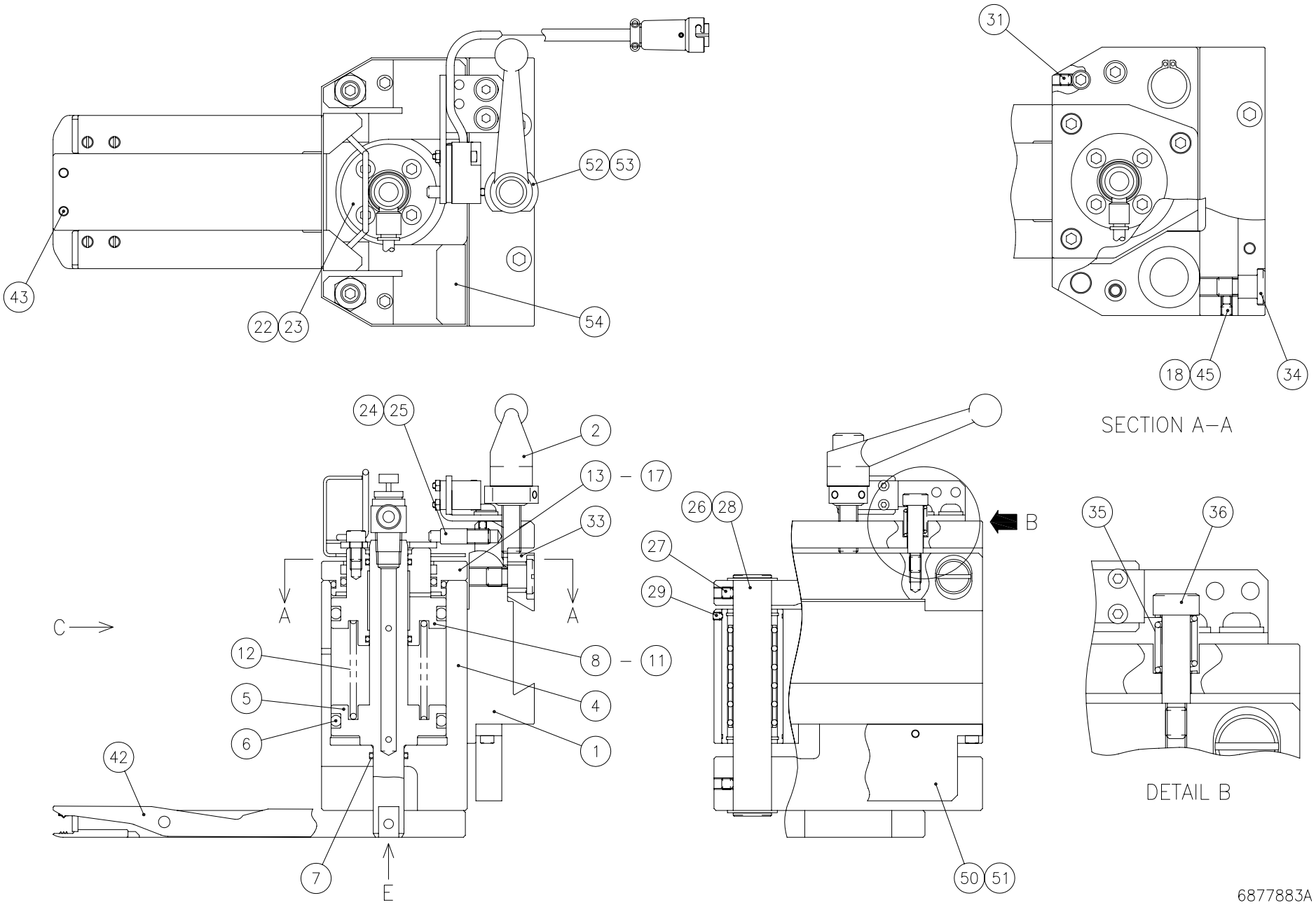
43
22
23
52
53
54
31
18
45
34
SECTION A–A
24
25
2
13
17
33
26
28
27
29
B
35
36
C
A
A
12
5
6
42
8
11
4
1
7
E
50
51
DETAIL B
6877883A

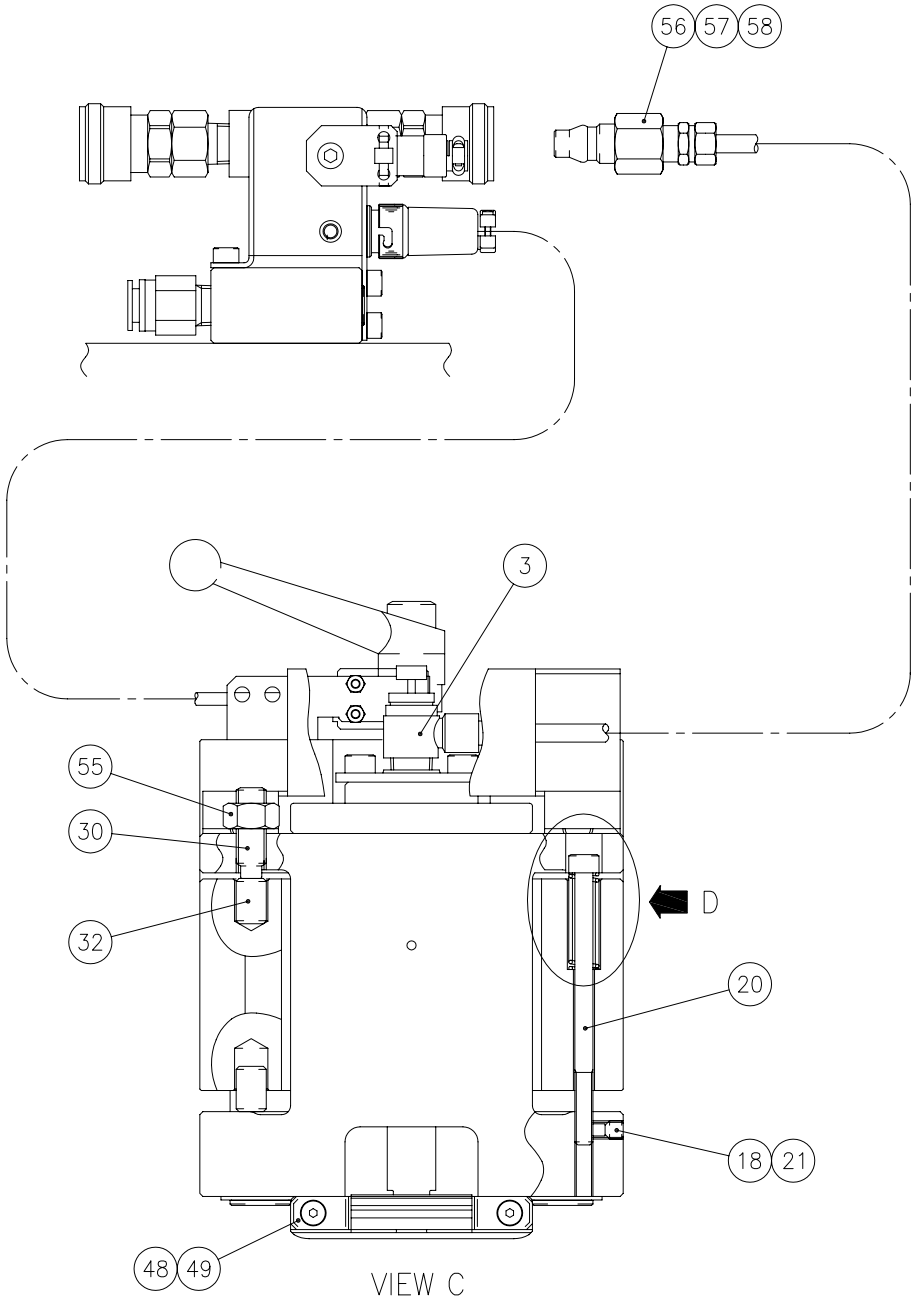
56
57
58
3
55
30
32
D
20
18
21
48
49
VIEW C

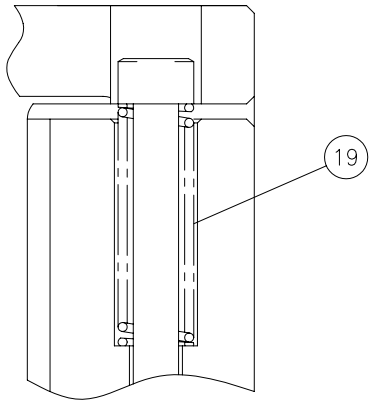
19
DETAIL D

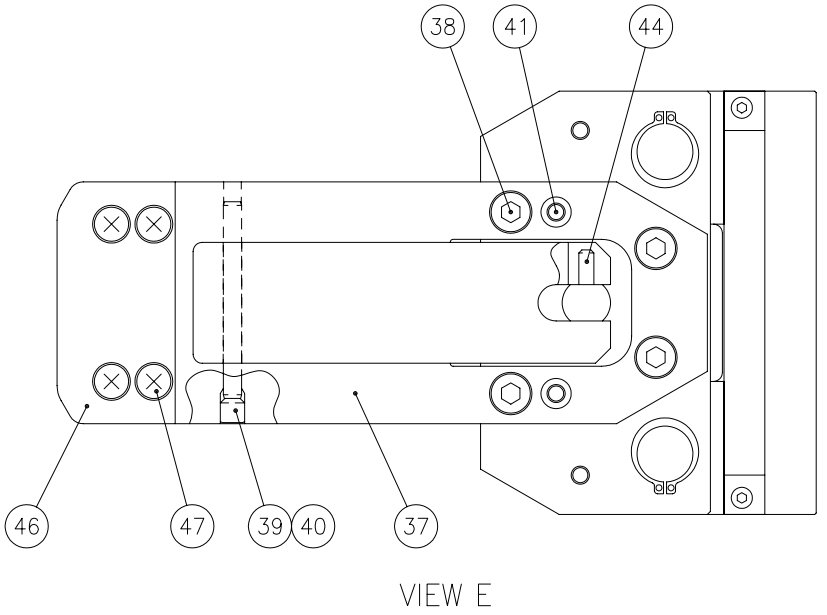
38
41
44
46
47
39
40
37
VIEW E

6877883A

Unit No. 176

Loading Pneumatic Clamp

From Serial No.36102001 and after

Index	Code	Parts Name	Drawing No.	Type	Maker	Q'ty	Note
1	74417231	Clamp Housing	6877893			1	
2	61168926	Lever	P437354009	KR10X25	IMAO Mfg	1	
3	74389227	Air Flow Control Valve	P555002118	AS2201F-02-06K	SMC	1	
4	74380296	Cylinder	0826262 B			1	
5	74571332	Piston	0826264 D			1	
6	74571116	O Ring	P590002050	1A-P50A	NOK	1	
7	10427215	O Ring	P590002016	1A-P16	NOK	1	
8	74380298	Piston (A)	0826267 D			1	
9	74318239	Wiper Ring	P590303022	SER-20	SAKAGAMI	1	
10	74571116	O Ring	P590002050	1A-P50A	NOK	1	
11	74379884	O Ring	P590002018	1A-P20	NOK	2	
12	74380299	Spring	0826269 A			1	
13	74383016	Cylinder Cover	0826263 B			1	
14	31183033	Hex Soc Cap Screw	P330220003	M6X10		4	
15	74318238	Wiper Ring	P590303023	SER-44	SAKAGAMI	1	
16	74571333	O Ring	P590002043	1A-P44	NOK	1	
17	74571334	O Ring	P590012007	1A-G55	NOK	1	
18	74335701	Insert	0806073			4	
19	74335602	Hook Spring	0826218			2	

Index	Code	Parts Name	Drawing No.	Type	Maker	Q'ty	Note
20	74304955	Hex Soc Cap Screw	P330220024	M6X90		2	
21	36147504	Socket Set Screw	P330550024	M6X6(Flat-end)		2	
22	74335917	Cover	0826266			1	
23	31183033	Hex Soc Cap Screw	P330220003	M6X10		4	
24	74335733	Stopper	0826268 A			1	
25	74566095	Socket Set Screw	P330550007	M4X4(Flat-end)		1	
26	74571151	Stroke Bearing	7830778	STF203270+126L	THK	2	
27	74306405	Socket Set Screw	P330590017	M6X6(Cup-end)		4	
28	86611033	Locating Snap Ring	P406108043	STW-20	OCHIAI	4	
29	74183112	Socket Set Screw	P330580006	M4X5(Cone-end)		2	
30	10380429	Socket Set Screw	P330570035	M10X30(Dog-end)		2	
31	74306405	Socket Set Screw	P330590017	M6X6(Cup-end)		2	
32	74335627	Cushion	0806009			4	
33	74335706	Lock Plate	0816004 A			1	
34	74335716	Pressure Pin	0816005 B			2	
35	74335617	Release Spring	0816006			2	
36	74383912	Shoulder Bolt	P338134051	MSB8-25	MISUMI	2	
37	74571335	Clamp Base (Pneumatic)	0826270 A			1	
38	79565423	Hex Soc Cap Screw	P330230004	M8X15		4	

Index	Code	Parts Name	Drawing No.	Type	Maker	Q'ty	Note
39	74571118	Parallel Pin	0826285			1	
40	10354917	Socket Set Screw	P330590023	M8X8(Cup-end)		1	
41	74562190	Parallel Pin	P337054046	MSTM10-30	MISUMI	2	
42	74569333	Clamper (Pneumatic)	0826275			1	STD
42	74161549	Clamper (Pneumatic 10mm)	0826277			1	10mm
43	74335826	Socket Set Screw	0826186			2	
44	31172625	Parallel Pin	P337020027	A-5X35		1	
45	36147504	Socket Set Screw	P330550024	M6X6(Flat-end)		2	
46	74161576	Clamp Plate (Pneumatic)	0826272			1	
47	74569335	Flat Head Screw	0826035	M6X12-SUS304		4	
48	74569336	Stopper Plate	0816026 D			2	
49	79319751	Flat Head Bolt	P334520011	M4X10		2	
50	74417232	Sensor Dog	6877897			1	
51	86620301	Hex Soc Cap Screw	P330200018	M4X15		2	
52	74575238	Dog	6826267			1	
53	10560034	Socket Set Screw	P330590005	M4X4(Cup-end)		2	
54	74419454	Cable Bracket	6873680			1	
55	10427991	Nut	P332000006	M10		2	
56	31182101	Plastic Hose	P230223015	UH30-06(Black)-1M	JUNKOSHA	1	

Loading Pneumatic Clamp

From Serial No.36102001 and after

Index	Code	Parts Name	Drawing No.	Type	Maker	Q'ty	Note
57	74563771	Instant Fitting	P586535043	WN-06-02	JUNKOSHA	1	
58	74717014	Quick Connect Joint	P589026011	20PF	NITTO KOHKI	1	

From Serial No.36102001 and after

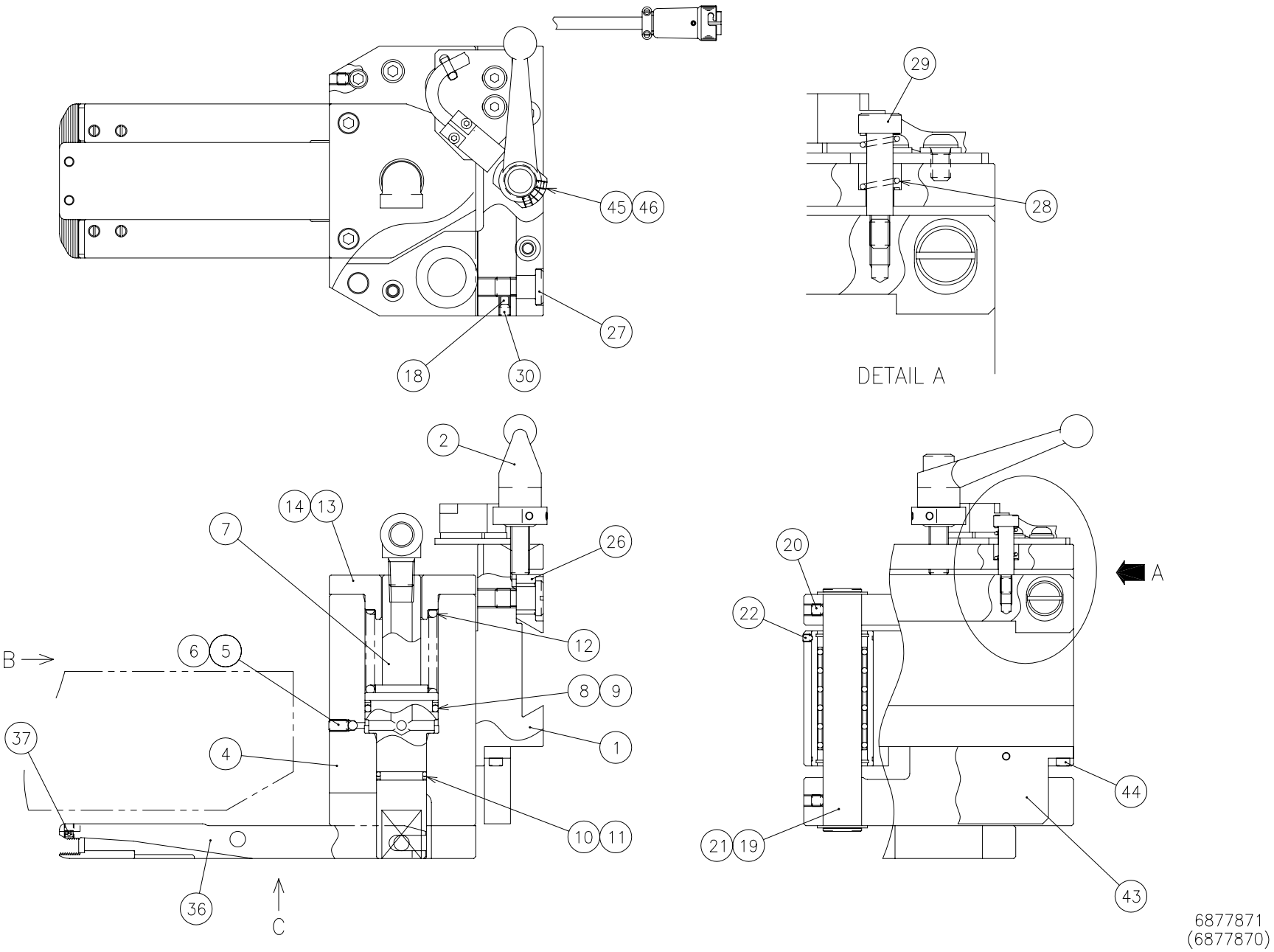

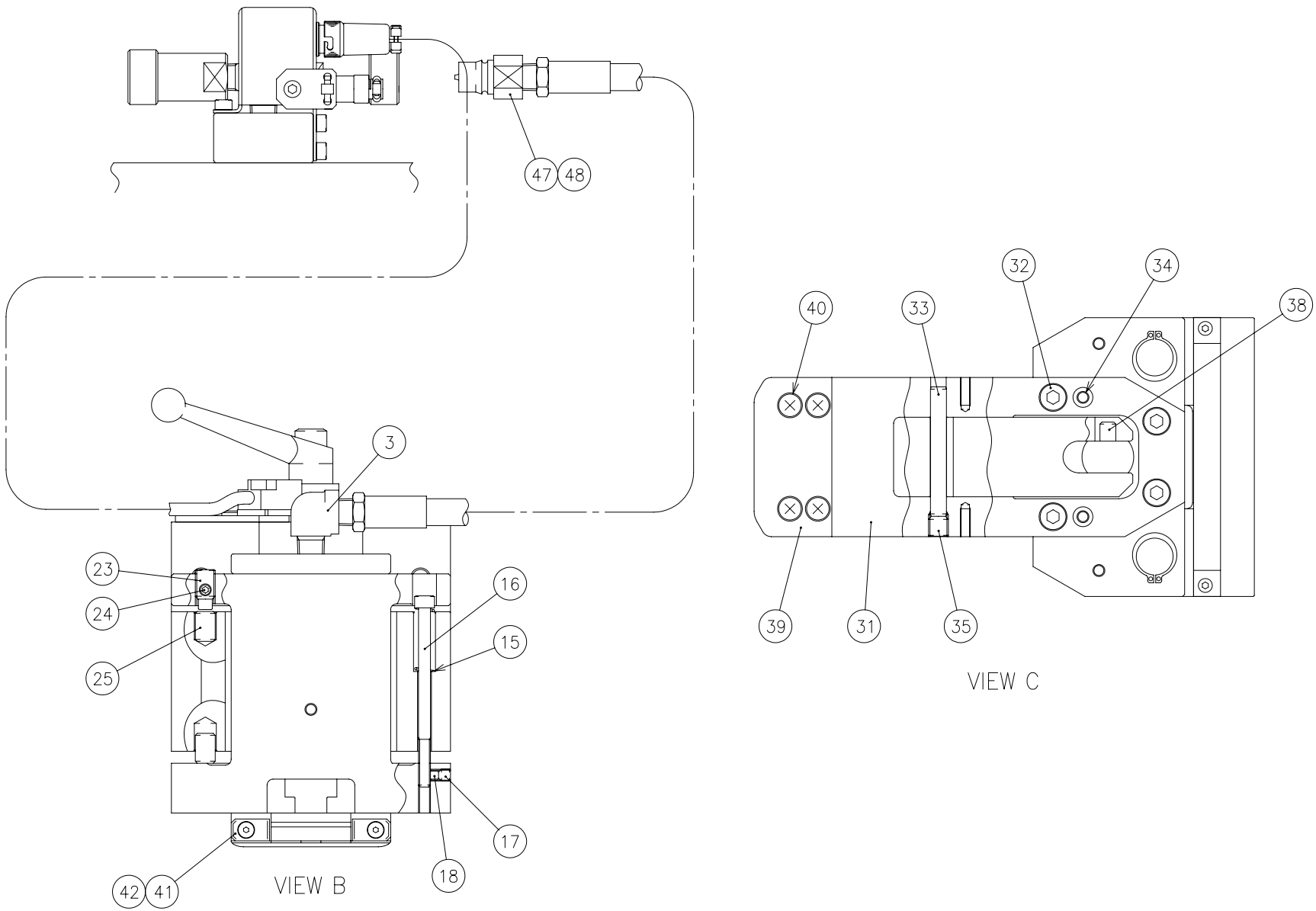

6877871
(6877870)

Unit No. 177

Hydraulic Clamp(1) From Serial No.36102001 and after

Index	Code	Parts Name	Drawing No.	Type	Maker	Q'ty	Note
1	74417227	Clamp Housing	6877892			1	
2	61168926	Lever	P437354009	KR10X25	IMAO Mfg	1	
3	74382140	Elbow	P580058011	2088-04(1/4)	Yokohama Rubber	1	
4	74571149	Cylinder	0826191 C			1	
5	74525430	Steel Ball (for Bearing)	P406000002	3/16		1	
6	86620204	Socket Set Screw	P330590019	M6X10(Cup-end)		1	
7	74571150	Piston	0826077 D			1	
8	74563967	O Ring	P590002033	1A-P32	NOK	1	
9	74717104	Backup Ring	P590042042	T2-P32	NOK	1	
10	74569458	O Ring	P590002020	1A-P22	NOK	1	
11	74717102	Backup Ring	P590042006	T2-P22	NOK	1	
12	74315813	Return Spring	0826047 A			1	
13	74315817	Cylinder Cover	0826179			1	
14	79564305	Hex Soc Cap Screw	P330220006	M6X15		4	
15	74335602	Hook Spring	0826218			2	
16	74304955	Hex Soc Cap Screw	P330220024	M6X90		2	
17	74306405	Socket Set Screw	P330590017	M6X6(Cup-end)		2	
18	74335701	Insert	0806073			4	
19	74571151	Stroke Bearing	7830778	STF203270+126L	THK	2	

Index	Code	Parts Name	Drawing No.	Type	Maker	Q'ty	Note
20	74306405	Socket Set Screw	P330590017	M6X6(Cup-end)		4	
21	86611033	Locating Snap Ring	P406108043	STW-20	OCHIAI	4	
22	74183112	Socket Set Screw	P330580006	M4X5(Cone-end)		2	
23	10443444	Socket Set Screw	P330570033	M10X20(Dog-end)		2	
24	74306405	Socket Set Screw	P330590017	M6X6(Cup-end)		2	
25	74335627	Cushion	0806009			4	
26	74335706	Lock Plate	0816004 A			1	
27	74335716	Pressure Pin	0816005 B			2	
28	74335617	Release Spring	0816006			2	
29	74383912	Shoulder Bolt	P338134051	MSB8-25	MISUMI	2	
30	74306405	Socket Set Screw	P330590017	M6X6(Cup-end)		2	
31	74571152	Clamp Base (Hydraulic)	0826271 A			1	
32	79564804	Hex Soc Cap Screw	P330230006	M8X20		4	
33	74571153	Parallel Pin	0826286			1	
34	74562190	Parallel Pin	P337054046	MSTM10-30	MISUMI	2	
35	74319125	Socket Set Screw	P330550048	M10X10(Flat-end)		1	
36	74569479	Clamper (Hydraulic)	0826279			1	
37	10560025	Socket Set Screw	P330590011	M5X6(Dimple Type)		2	
38	74571154	Parallel Pin	P337020048	A-8X35		1	

Unit No. 177

Hydraulic Clamp(1)

From Serial No.36102001 and after

Index	Code	Parts Name	Drawing No.	Type	Maker	Q'ty	Note
39	74569480	Clamp Plate (Hydraulic)	0826274			1	
40	74569335	Flat Head Screw	0826035	M6X12-SUS304		4	
41	74569336	Stopper Plate	0816026 D			2	
42	79319751	Flat Head Bolt	P334520011	M4X10		2	
43	74417232	Sensor Dog	6877897			1	
44	86620301	Hex Soc Cap Screw	P330200018	M4X15		2	
45	74575238	Dog	6826267			1	
46	10560034	Socket Set Screw	P330590005	M4X4(Cup-end)		2	
47	74315830	Hydraulic Hose	0827577 C			1	
48	74525514	Quick Connect Joint	P589026008	2HP	NITTO KOHKI	1	

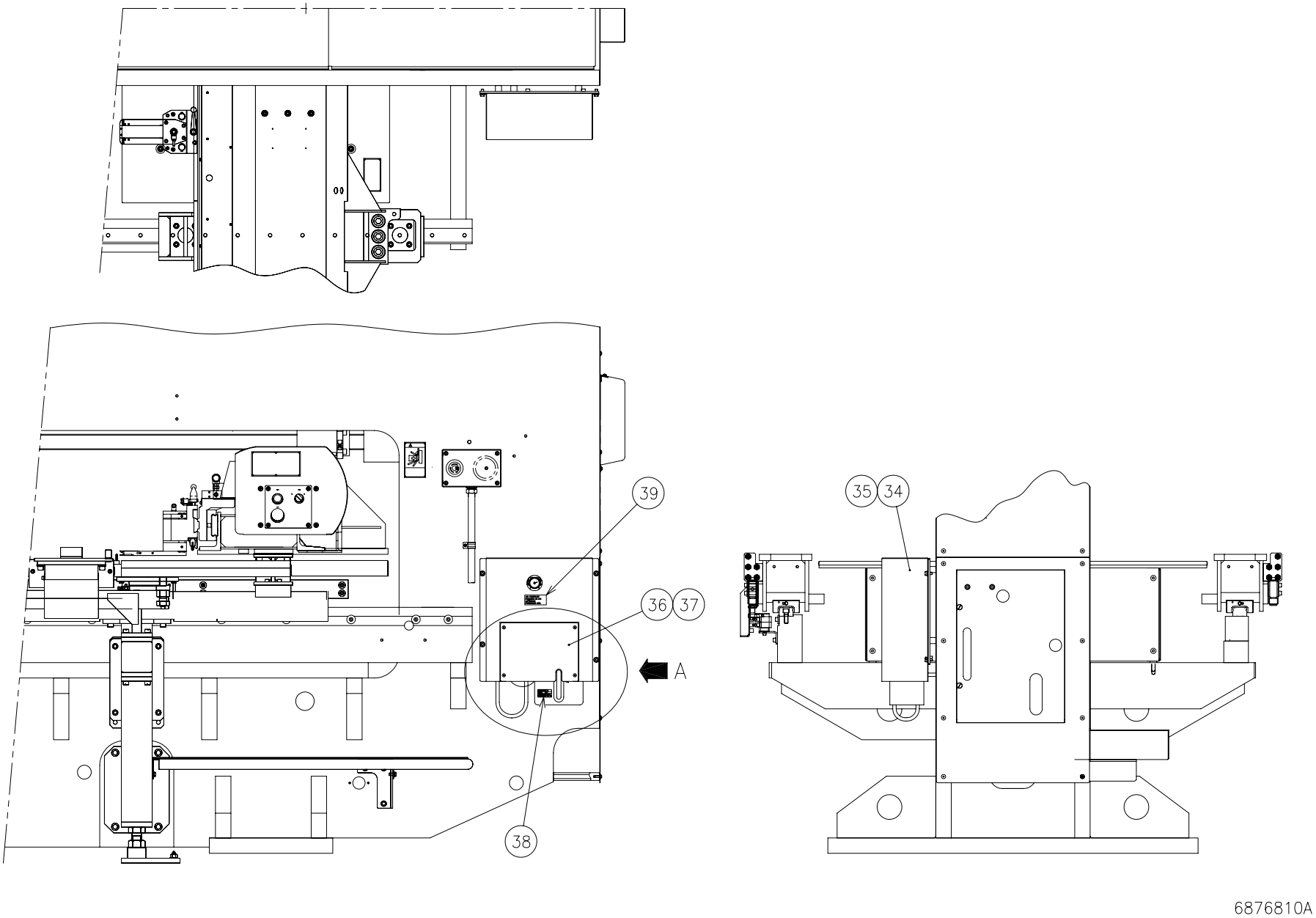
39
36
37
A
38
35
34
6876810A

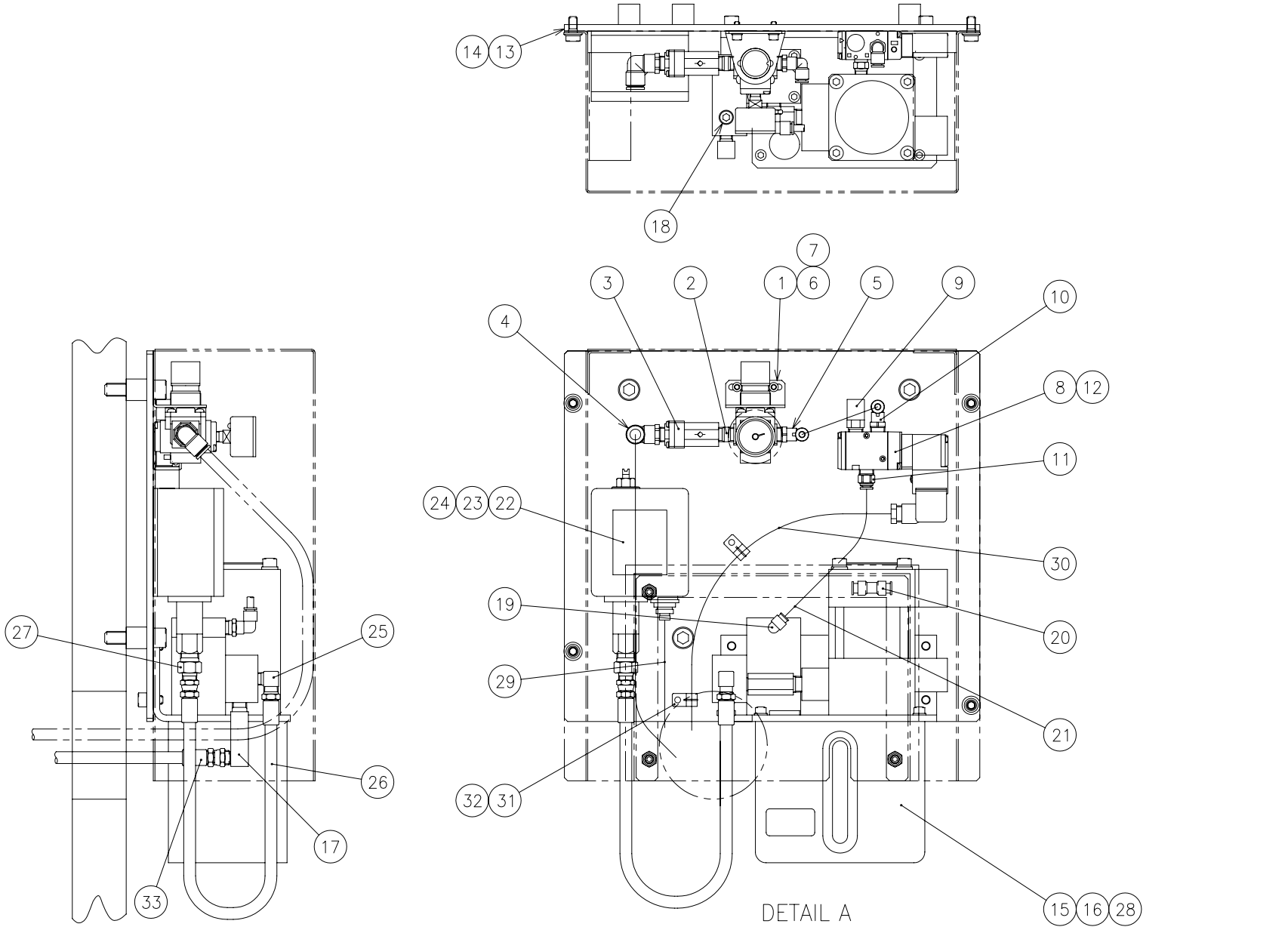
14
13
18
7
3
2
1
6
5
9
10
4
8
12
11
24
23
22
30
19
20
27
25
29
21
26
32
31
17
33
DETAIL A
15
16
28

6876810A

Unit No. 178

Hydraulic Clamp(2)

From Serial No.36102001 and after

Index	Code	Parts Name	Drawing No.	Type	Maker	Q'ty	Note
1	74416433	Air Pressure Valve	P553002081	AR20-02BG	SMC	1	
2	10561544	Nipple	P580020002	1/4		1	
3	74722862	Air Check Valve	P553032001	AK2000-02	SMC	1	
4	36164175	Instant Fitting	P586563129	KQ2L10-02S	SMC	1	
5	74569148	Instant Fitting	P586623032	KQ2L06-02S	SMC	1	
6	79316109	Hex Soc Cap Screw	P330210006	M5X15		2	
7	31182981	Washer	P336000080	5(Regular Round)		2	
8	74387653	Air Directional Valve	P556002180	VP342-5DZ-02B	SMC	1	
9	74717447	Silencer	P557032008	AN203-02	SMC	1	
10	74569148	Instant Fitting	P586623032	KQ2L06-02S	SMC	1	
11	52334260	Instant Fitting	P586533069	KQ2H06-02S	SMC	1	
12	74377049	Hex Soc Cap Screw	P330200056	M3X35		2	
13	74419455	Hydraulic Unit Bracket	6876811			1	
14	74568588	Flange Socket Bolt	P330468043	M12X45	NISSAN NEJI	3	
15	74419456	Hydraulic Unit	7931043 F	P-A-FS58(3SR-67342)	SR Engineering	1	
16	79564804	Hex Soc Cap Screw	P330230006	M8X20		4	
17	74570251	Hose Adapter	P589222316	9034-PT1/4-PF1/4	Yokohama Rubber	1	
18	36327821	Plug For Piping	P580208002	GM-1/4	GOSHO Works	1	
19	74310045	Instant Fitting	P586564001	EL6-PT1/8	NITTA MOORE	1	

Index	Code	Parts Name	Drawing No.	Type	Maker	Q'ty	Note
20	74523332	Instant Fitting	P586604008	ET6-PT1/4	NITTA MOORE	1	
21	74570235	Plastic Hose	P230222121	U2-4-6X4(Black)-0.8M	NITTA MOORE	3	
22	74316103	Pressure Switch	P549008002	SP-R-100	ACT Electric	1	
23	74315912	Antivibration Rubber	0827578			1	
24	86610805	Hex Soc Cap Screw	P330220014	M6X40		2	
25	74570247	Hose Adapter	P589222254	1034-PT1/4-PF1/4	Yokohama Rubber	1	
26	74416422	Hose (I)	6829062	NV105-04-0.4M	Yokohama Rubber	1	
27	74416423	Hose Adapter	P589222203	1009-PT3/8-PF1/4	Yokohama Rubber	1	
28		Hydraulic Oil	P238000036	NCA-250-1L	AMADA	2	
29	74569995	Cable Y-4	6812969			1	
30	74569996	Cable Y-5	6812970			1	
31	74563689	Saddle For Conduct	P381017105	PZ0106(D6.2)	DAIWA DENGYO	2	
32	31183033	Hex Soc Cap Screw	P330220003	M6X10		2	
33	74419457	Hose H	6876941			1	
34	74419458	Unit Cover	6876816			1	
35	74382078	Flange Socket Bolt	P330468006	M8X15	NISSAN NEJI	4	
36	74419459	Cap	6876817			1	
37	36379029	Button Head Screw	P334500013	M6X10		4	
38	74383625	Legend Plate (Oil Supply)(EXP)	6535246			1	English

Index	Code	Parts Name	Drawing No.	Type	Maker	Q'ty	Note
38	74569164	Legend Plate (Oil Supply) FRA	6810218			1	French
38	74569163	Legend Plate (Oil Supply) GER	6810216			1	German
38	74569162	Legend Plate (Oil Supply) ITA	6523262			1	Italian
38	74419460	Legend Plate (Oil Supply) Ch.	6817536			1	Chinese
39	74386340	Legend Plate (Pneumatic)	6045138 A			1	for EU,EXP
39	74419461	Legend Plate (Pneumatic)	6817500			1	Chinese

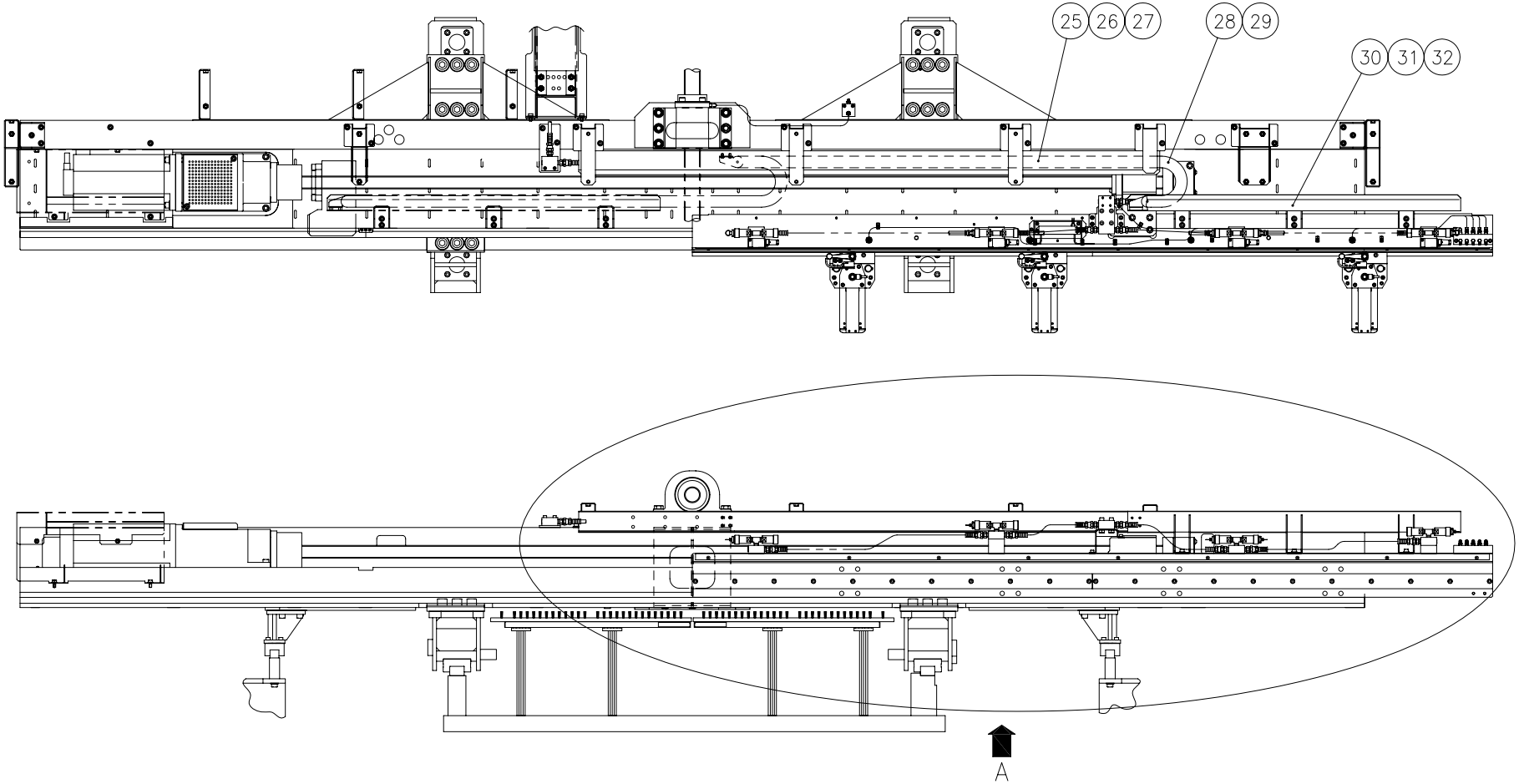
25
26
27
28
29
30
31
32
A
6874510B

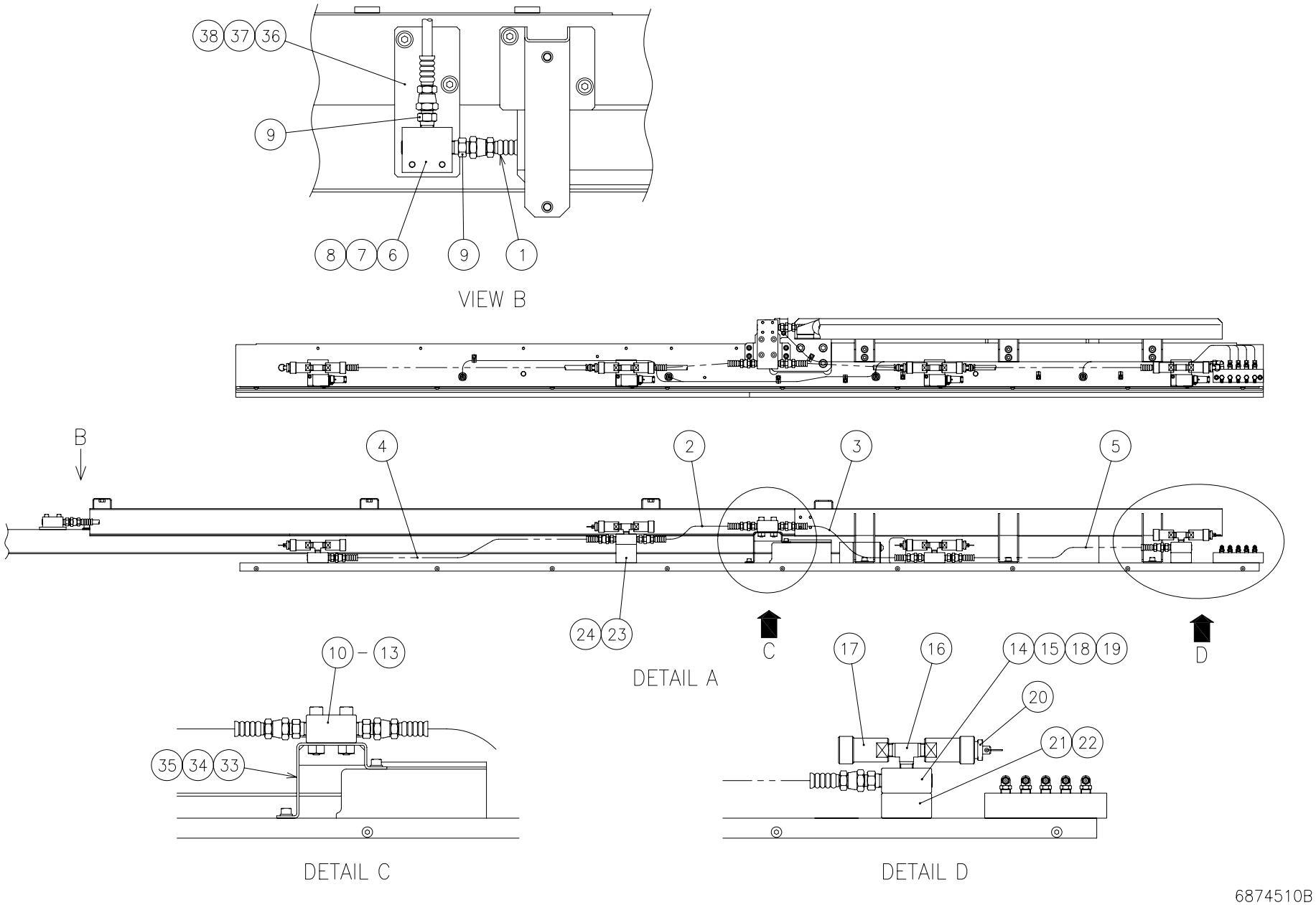
38
37
36
9
8
7
6
9
1
VIEW B
B
4
2
3
5
24
23
C
D
DETAIL A
10 – 13
35
34
33
DETAIL C
17
16
14
15
18
19
20
21
22
DETAIL D
6874510B

Unit No. 179

Hydraulic Clamp(3) From Serial No.36102001 and after

Index	Code	Parts Name	Drawing No.	Type	Maker	Q'ty	Note
1	74416438	Hydraulic Hose (A)	6827455 A	NV105-04-2.22M	Yokohama Rubber	1	
2	74417246	Hydraulic Hose (B)	6871596			1	
3	74416427	Hydraulic Hose (C)	6827454 A	NV105-04-0.37M	Yokohama Rubber	1	
4	74416436	Hydraulic Hose D	6829067	NV105-04-0.675M	Yokohama Rubber	1	
5	74416437	Hydraulic Hose E	6829068	NV105-04-0.525M	Yokohama Rubber	1	
6	74561698	Piping Block (A)	6597197 A			1	
7	86283301	Hex Soc Cap Screw	P330220013	M6X35		2	
8	36327821	Plug For Piping	P580208002	GM-1/4	GOSHO Works	1	
9	74570220	Hose Adapter	P589222202	1009-PT1/4-PF1/4	Yokohama Rubber	2	
10	74388410	Piping Block (B)	6597198			1	
11	36367625	Hex Soc Cap Screw	P330230010	M8X40		4	
12	74570220	Hose Adapter	P589222202	1009-PT1/4-PF1/4	Yokohama Rubber	3	
13	36327821	Plug For Piping	P580208002	GM-1/4	GOSHO Works	2	
14	74417230	Piping Block (C)	6874379			4	
15	79568702	Hex Soc Cap Screw	P330230008	M8X30		4	
16	74416435	Tee	P580107011	SMT-82820	KOYO	4	
17	74722971	Quick Connect Joint	P589026009	2HS	NITTO KOHKI	8	
18	74570220	Hose Adapter	P589222202	1009-PT1/4-PF1/4	Yokohama Rubber	6	
19	36327821	Plug For Piping	P580208002	GM-1/4	GOSHO Works	2	

Index	Code	Parts Name	Drawing No.	Type	Maker	Q'ty	Note
20	74571125	Safety Cap (HSP)	7832923	2HS-SD-V0	NITTO KOHKI	5	
21	74416428	Spacer	6829066	FB25X16-50		1	
22	36325730	Hex Soc Cap Screw	P330230013	M8X55		2	
23	74417247	Spacer	6871593			1	
24	31179140	Hex Soc Cap Screw	P330230017	M8X75		2	
25	74419103	Fixed Hose Guide	6874332 A			1	
26	79565423	Hex Soc Cap Screw	P330230004	M8X15		8	
27	79567109	Washer	P336000006	8(Regular Round)		8	
28	74417229	Cable Guard	7830977	250.03.055-34-2000.12	IGUS Japan	1	
29	36379029	Button Head Screw	P334500013	M6X10		8	
30	74417325	Movable Hose Guide	6874333 A			1	
31	79564804	Hex Soc Cap Screw	P330230006	M8X20		6	
32	79567109	Washer	P336000006	8(Regular Round)		6	
33	74415526	Connector Bracket	6826385			1	
34	31183033	Hex Soc Cap Screw	P330220003	M6X10		4	
35	79565419	Washer	P336000005	6(Regular Round)		4	
36	74417326	Manifold Bracket	6874334			1	
37	79564804	Hex Soc Cap Screw	P330230006	M8X20		2	
38	79567109	Washer	P336000006	8(Regular Round)		2	

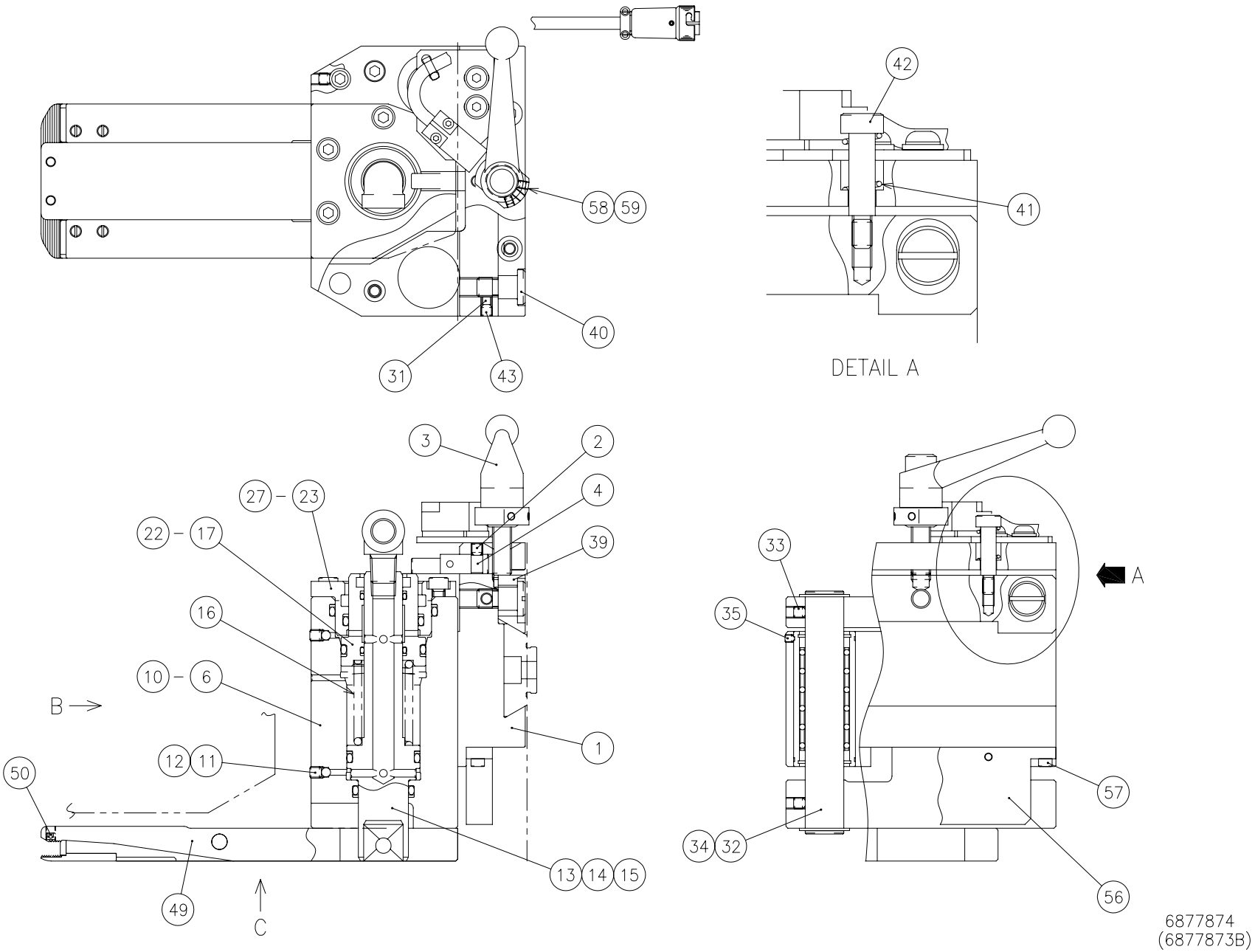
58
59
40
31
43
42
41
DETAIL A
3
2
4
39
27 – 23
22 – 17
16
10 – 6
B
12 11
50
1
13 14 15
49
C
33
35
A
34 32
57
56
6877874
(6877873B)

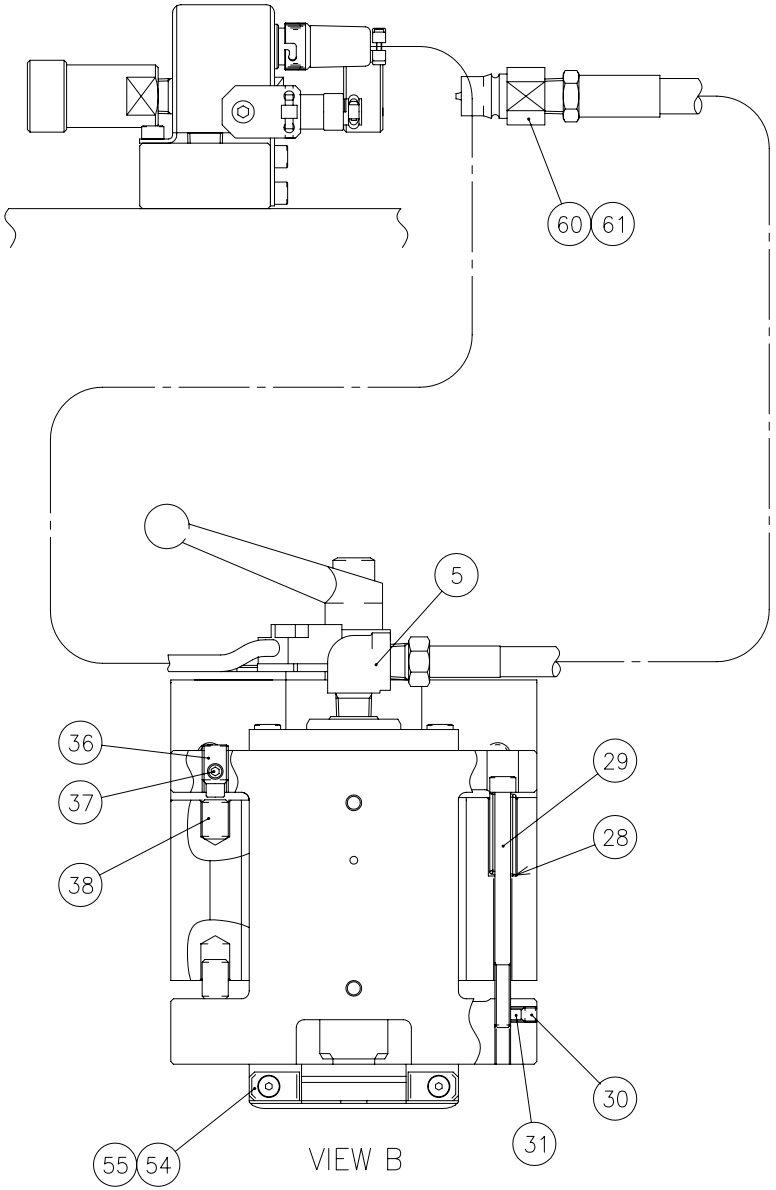

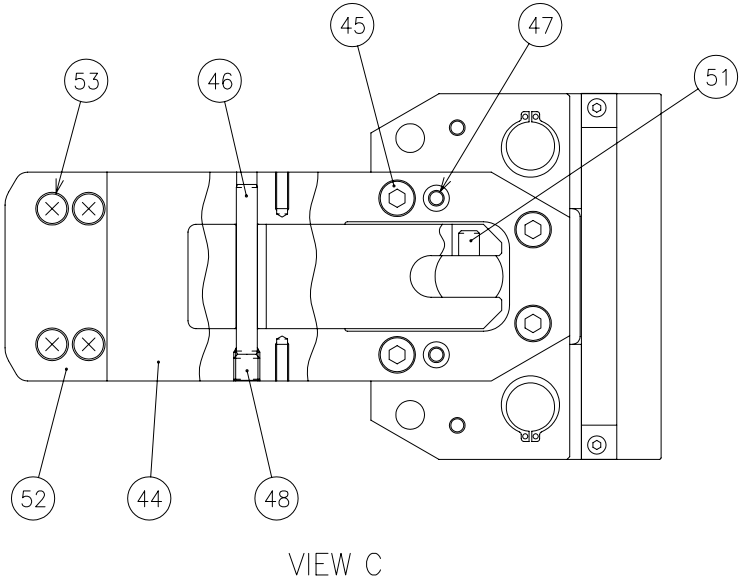

6877874
(6877873B)

Unit No. 180

Loading Hydraulic Clamp

From Serial No.36102001 and after

Index	Code	Parts Name	Drawing No.	Type	Maker	Q'ty	Note
1	74417245	Clamp Housing	6877894			1	
2	74306405	Socket Set Screw	P330590017	M6X6(Cup-end)		1	
3	61168926	Lever	P437354009	KR10X25	IMAO Mfg	1	
4	74317903	Stop Pin	0826252 A			1	
5	74382140	Elbow	P580058011	2088-04(1/4)	Yokohama Rubber	1	
6	74416430	Cylinder	0826253 C			1	
7	74563971	O Ring	P590002049	1A-P50	NOK	1	
8	74717107	Backup Ring	P590042044	T2-P50	NOK	1	
9	74379885	O Ring	P590002026	1A-P26	NOK	1	
10	74717103	Backup Ring	P590042008	T2-P26	NOK	1	
11	74525430	Steel Ball (for Bearing)	P406000002	3/16		2	
12	36147504	Socket Set Screw	P330550024	M6X6(Flat-end)		2	
13	74416429	Piston	0826254 D			1	
14	74563967	O Ring	P590002033	1A-P32	NOK	1	
15	74717104	Backup Ring	P590042042	T2-P32	NOK	1	
16	74573866	Return Spring	0826255 B			1	
17	74380325	Piston (B)	0826256 B			1	
18	74563968	O Ring	P590002038	1A-P38	NOK	1	
19	74717106	Backup Ring	P590042043	T2-P38	NOK	1	

Index	Code	Parts Name	Drawing No.	Type	Maker	Q'ty	Note
20	74379884	O Ring	P590002018	1A-P20	NOK	2	
21	74717101	Backup Ring	P590042041	T2-P20	NOK	2	
22	74318236	Wiper Ring	P590303024	SDR-20	SAKAGAMI	1	
23	74380326	Cylinder Cover	0826257 B			1	
24	74563969	O Ring	P590002037	1A-P36	NOK	1	
25	74717105	Backup Ring	P590042045	T2-P36	NOK	1	
26	74318237	Wiper Ring	P590303025	SDR-36	SAKAGAMI	1	
27	79564305	Hex Soc Cap Screw	P330220006	M6X15		6	
28	74335602	Hook Spring	0826218			2	
29	74304955	Hex Soc Cap Screw	P330220024	M6X90		2	
30	36147504	Socket Set Screw	P330550024	M6X6(Flat-end)		2	
31	74335701	Insert	0806073			4	
32	74571151	Stroke Bearing	7830778	STF203270+126L	THK	2	
33	74306405	Socket Set Screw	P330590017	M6X6(Cup-end)		4	
34	86611033	Locating Snap Ring	P406108043	STW-20	OCHIAI	4	
35	74183112	Socket Set Screw	P330580006	M4X5(Cone-end)		2	
36	10443444	Socket Set Screw	P330570033	M10X20(Dog-end)		2	
37	74306405	Socket Set Screw	P330590017	M6X6(Cup-end)		2	
38	74335627	Cushion	0806009			4	

Index	Code	Parts Name	Drawing No.	Type	Maker	Q'ty	Note
39	74335706	Lock Plate	0816004 A			1	
40	74335716	Pressure Pin	0816005 B			2	
41	74335617	Release Spring	0816006			2	
42	74383912	Shoulder Bolt	P338134051	MSB8-25	MISUMI	2	
43	36147504	Socket Set Screw	P330550024	M6X6(Flat-end)		2	
44	74571152	Clamp Base (Hydraulic)	0826271 A			1	
45	79564804	Hex Soc Cap Screw	P330230006	M8X20		4	
46	74571153	Parallel Pin	0826286			1	
47	74562190	Parallel Pin	P337054046	MSTM10-30	MISUMI	2	
48	79323534	Socket Set Screw	P330590035	M10X10(Cup-end)		1	
49	74569479	Clamper (Hydraulic)	0826279			1	STD
49	74569442	Clamper (Hydraulic 10mm)	0826281			1	10mm
50	10560025	Socket Set Screw	P330590011	M5X6(Dimple Type)		2	
51	74571154	Parallel Pin	P337020048	A-8X35		1	
52	74569480	Clamp Plate (Hydraulic)	0826274			1	
53	74569335	Flat Head Screw	0826035	M6X12-SUS304		4	
54	74569336	Stopper Plate	0816026 D			2	
55	79319751	Flat Head Bolt	P334520011	M4X10		2	
56	74417232	Sensor Dog	6877897			1	

Loading Hydraulic Clamp

From Serial No.36102001 and after

Index	Code	Parts Name	Drawing No.	Type	Maker	Q'ty	Note
57	86620301	Hex Soc Cap Screw	P330200018	M4X15		2	
58	74575238	Dog	6826267			1	
59	10560034	Socket Set Screw	P330590005	M4X4(Cup-end)		2	
60	74315830	Hydraulic Hose	0827577 C			1	
61	74525514	Quick Connect Joint	P589026008	2HP	NITTO KOHKI	1	

From Serial No.36102001 and after

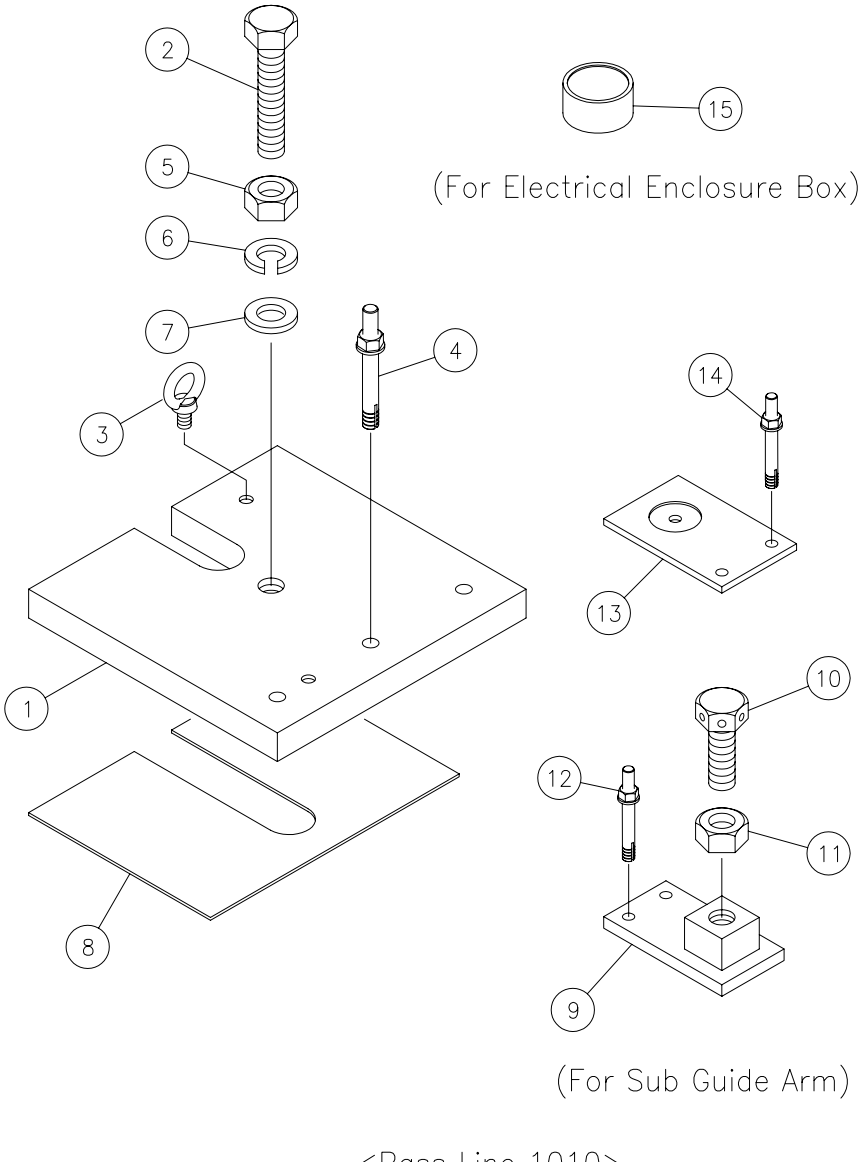

<Pass Line 1010>

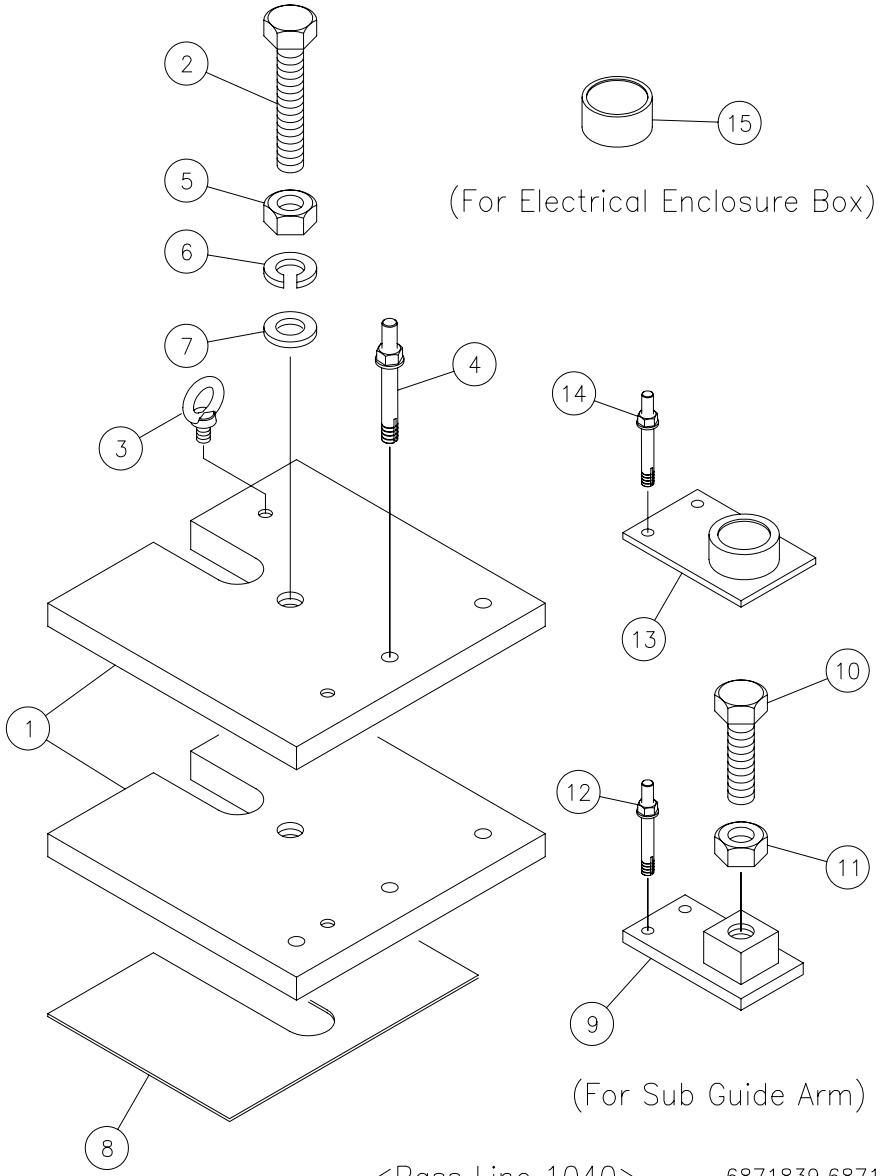

<Pass Line 1040>

6871839,6871840
6875821,6875822
6878141

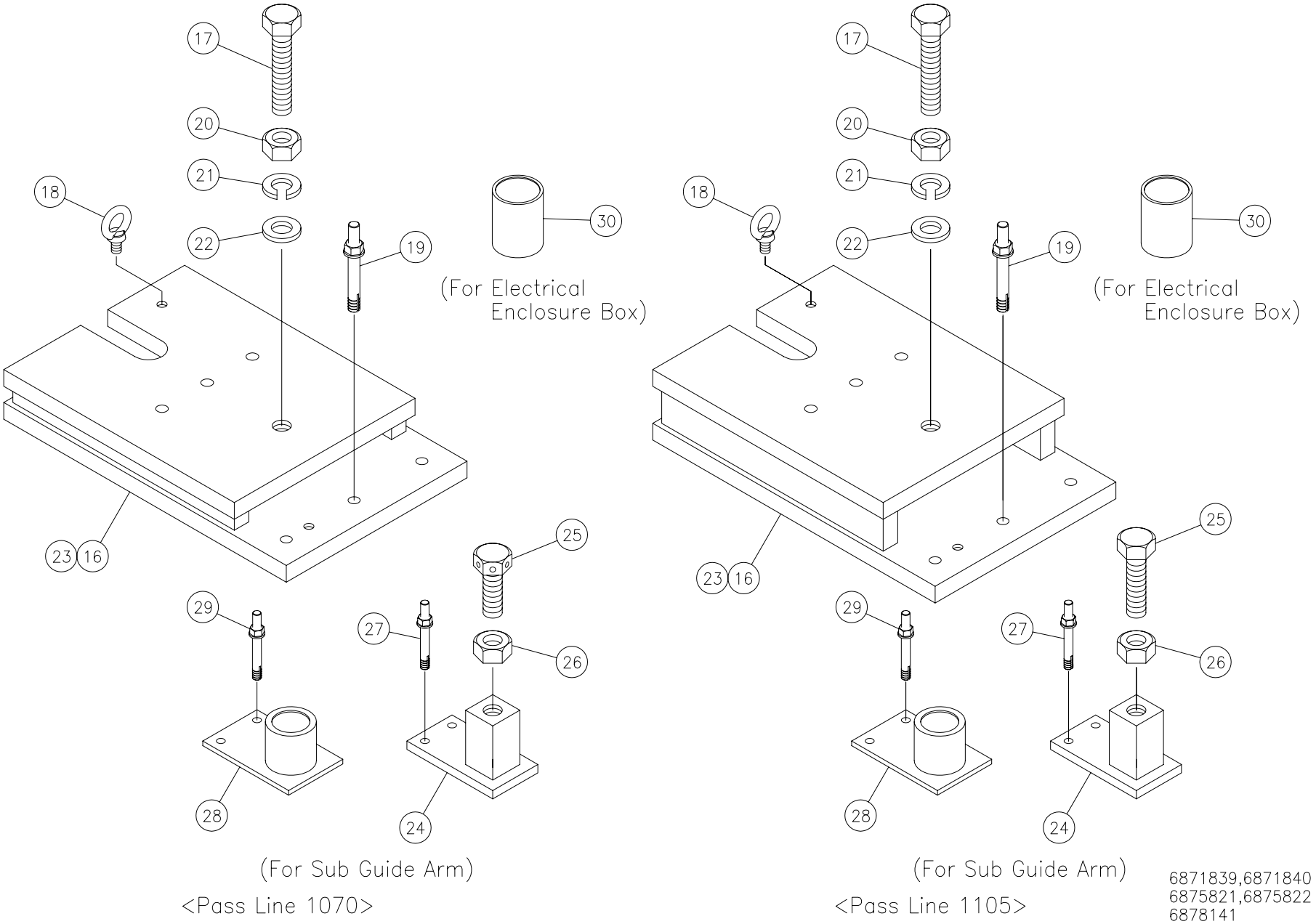
17
20
21
18
22
19
30
(For Electrical
Enclosure Box)
23
16
25
29
27
26
28
24
(For Sub Guide Arm)
<Pass Line 1070>
17
20
21
18
22
19
30
(For Electrical
Enclosure Box)
23
16
25
29
27
26
28
24
(For Sub Guide Arm)
<Pass Line 1105>
6871839,6871840
6875821,6875822
6878141

From Serial No.36102001 and after

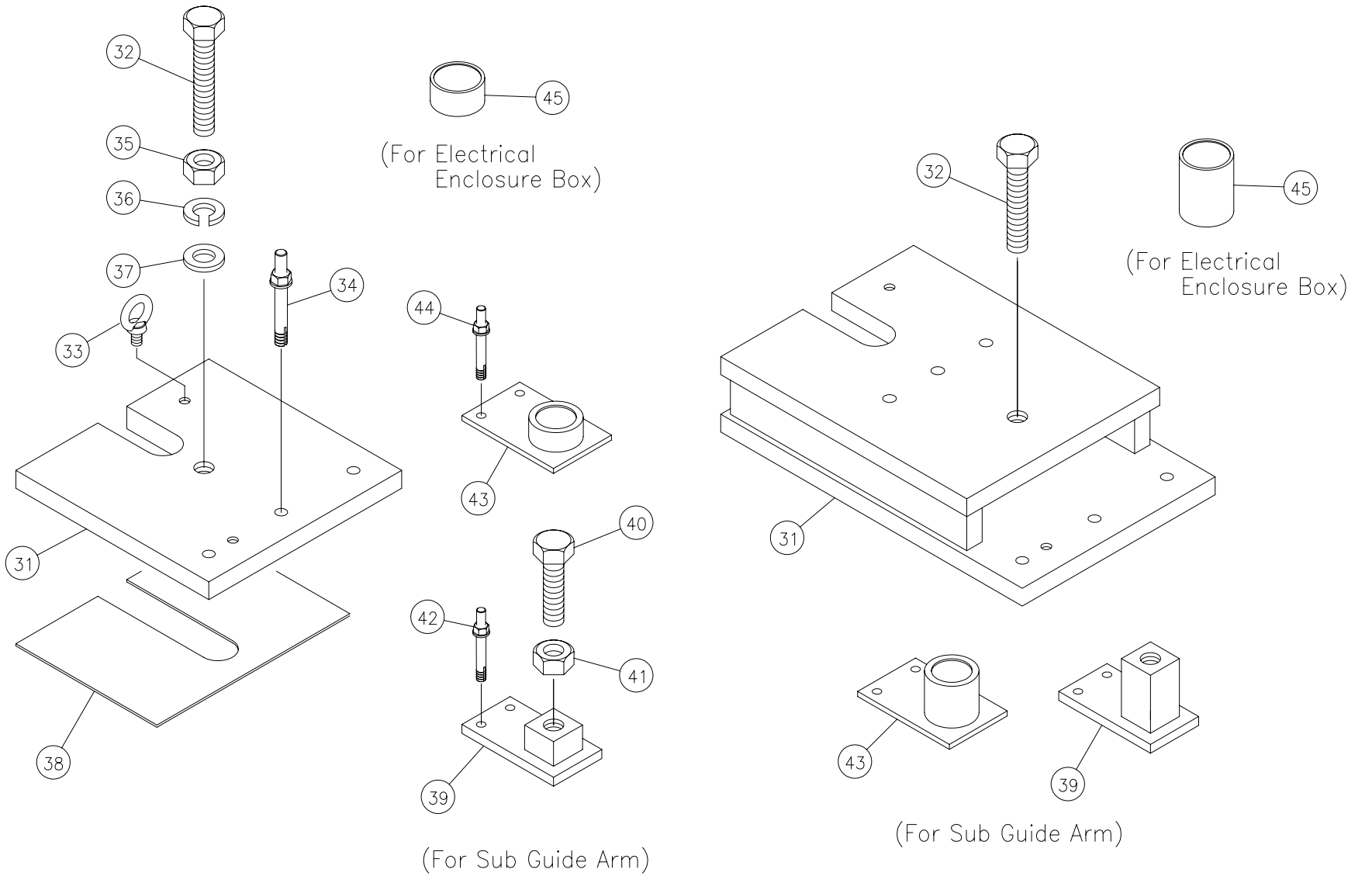

<Pass Line 1040 + 1105>

6871839,6871840
6875821,6875822
6878141

Unit No. 181

Pass Line (AY Plate) From Serial No.36102001 and after

Index	Code	Parts Name	Drawing No.	Type	Maker	Q'ty	Note
1	74417252	Base Plate (T40)	6874485			4	1010
1	74417250	Base Plate (T32)	6874479			8	1040
2	74570081	Bolt	P330090023	M30X160(All-thread)		4	1010
2	74570082	Bolt	P330090058	M30X180(All-thread)		4	1040
3	73117631	Eye-Bolt	P338000003	M16		2	
4	74564192	Anchor	P338213003	C-1615	SANKO Technology	12	
5	74320426	Nut	P332000012	M30		4	
6	74382052	Spring Washer	P336050015	30		4	
7	74713272	Washer	P336000016	30(Regular Round)		4	
8	74419091	Shim	6874486 A			1	
9	74571498	Assist Block (60)	6820776			4	
10	74569743	Adjustable Bolt (M30)	6911452	M30X90		4	1010
10	74577637	Bolt	P330090017	M30X120(All-thread)		4	1040
11	74320426	Nut	P332000012	M30		4	
12	86614132	Anchor	P338213005	C-1290	SANKO Technology	8	
13	74419462	Level Adjuster Base Plate	3808831			4	1010
13	74419463	Assist Base (1)	6880807			4	1040
14	86614132	Anchor	P338213005	C-1290	SANKO Technology	8	
15	74571497	Base Block (40)	6820778			4	

Index	Code	Parts Name	Drawing No.	Type	Maker	Q'ty	Note
16	74570080	Base Plate (T95)	6820772			4	1070
16	74575110	Base Plate (MT135)	6820775			4	1105
17	74570081	Bolt	P330090023	M30X160(All-thread)		4	
18	73117631	Eye-Bolt	P338000003	M16		2	
19	74564192	Anchor	P338213003	C-1615	SANKO Technology	12	
20	74320426	Nut	P332000012	M30		4	
21	74382052	Spring Washer	P336050015	30		4	
22	74713272	Washer	P336000016	30(Regular Round)		4	
23	74570072	Shim	6813753			1	
24	74571499	Assist Block (120)	6820777			4	
25	74569743	Adjustable Bolt (M30)	6911452	M30X90		4	1070
25	74577637	Bolt	P330090017	M30X120(All-thread)		4	1105
26	74320426	Nut	P332000012	M30		4	
27	86614132	Anchor	P338213005	C-1290	SANKO Technology	8	
28	74419464	Assist Base	6879668			4	
29	86614132	Anchor	P338213005	C-1290	SANKO Technology	8	
30	74575115	Base Block (100)	6820779			4	
31	74417250	Base Plate (T32)	6874479			8	1040
31	74575110	Base Plate (MT135)	6820775			4	1105

Index	Code	Parts Name	Drawing No.	Type	Maker	Q'ty	Note
32	74570082	Bolt	P330090058	M30X180(All-thread)		4	1040
32	74570081	Bolt	P330090023	M30X160(All-thread)		4	1105
33	73117631	Eye-Bolt	P338000003	M16		2	
34	74564192	Anchor	P338213003	C-1615	SANKO Technology	12	
35	74320426	Nut	P332000012	M30		4	
36	74382052	Spring Washer	P336050015	30		4	
37	74713272	Washer	P336000016	30(Regular Round)		4	
38	74419091	Shim	6874486 A			1	
39	74571498	Assist Block (60)	6820776			4	1040
39	74571499	Assist Block (120)	6820777			4	1105
40	74577637	Bolt	P330090017	M30X120(All-thread)		4	
41	74320426	Nut	P332000012	M30		4	
42	86614132	Anchor	P338213005	C-1290	SANKO Technology	8	
43	74419463	Assist Base (1)	6880807			4	1040
43	74419464	Assist Base	6879668			4	1105
44	86614132	Anchor	P338213005	C-1290	SANKO Technology	8	
45	74571497	Base Block (40)	6820778			4	1040
45	74575115	Base Block (100)	6820779			4	1105

From Serial No.36102001 and after

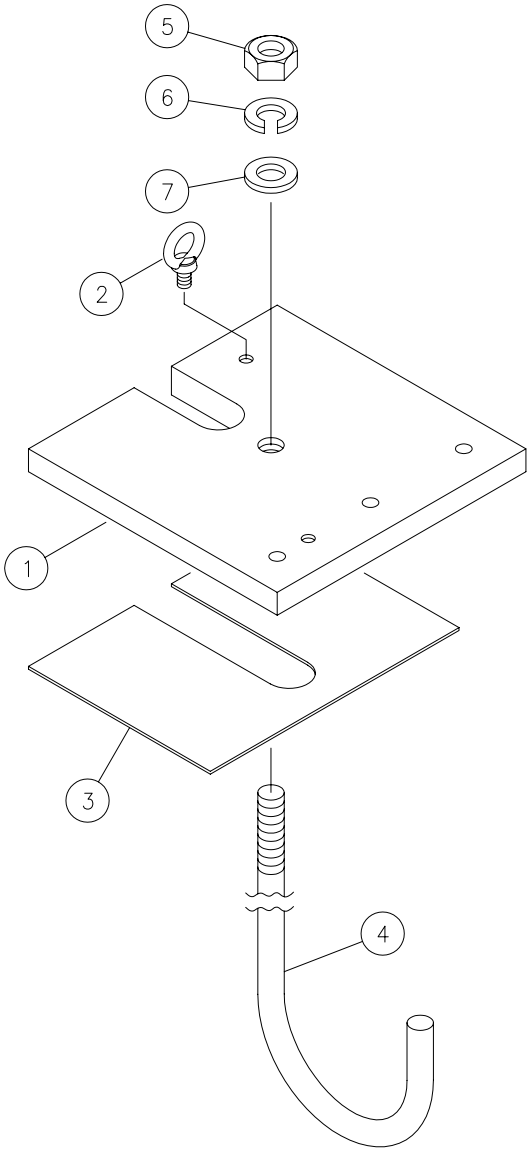

<Pass Line 1000.05>

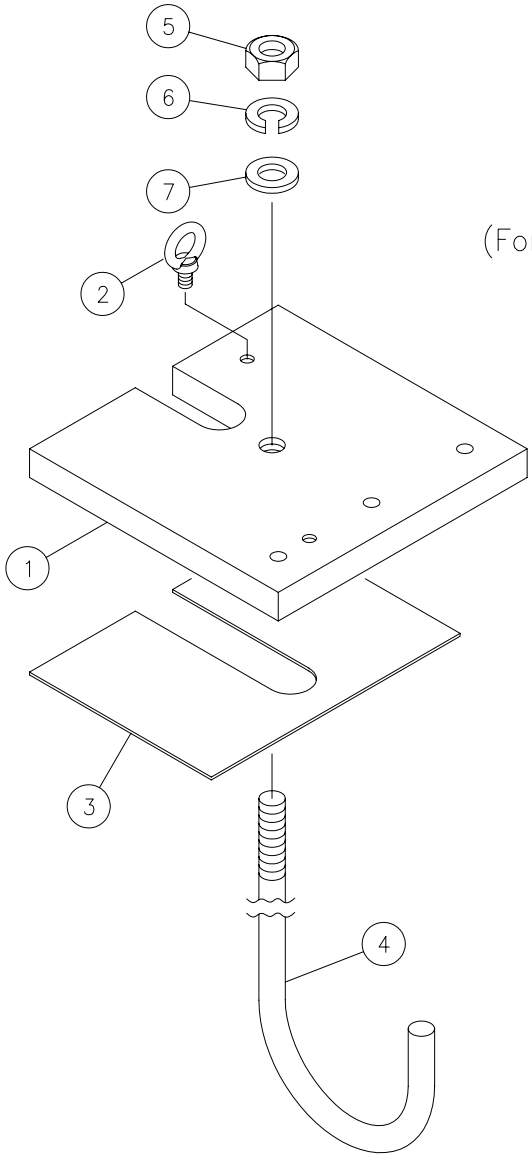

<Pass Line 1010>

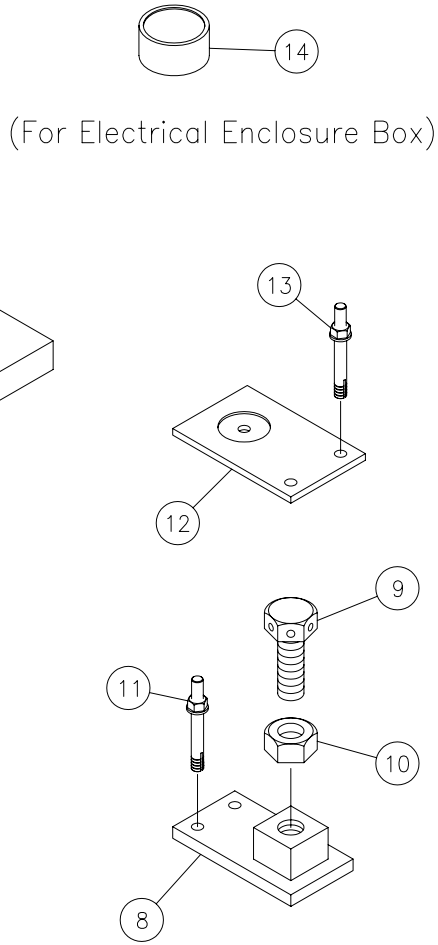

6871835
6871836
6875826
6875827
6875828

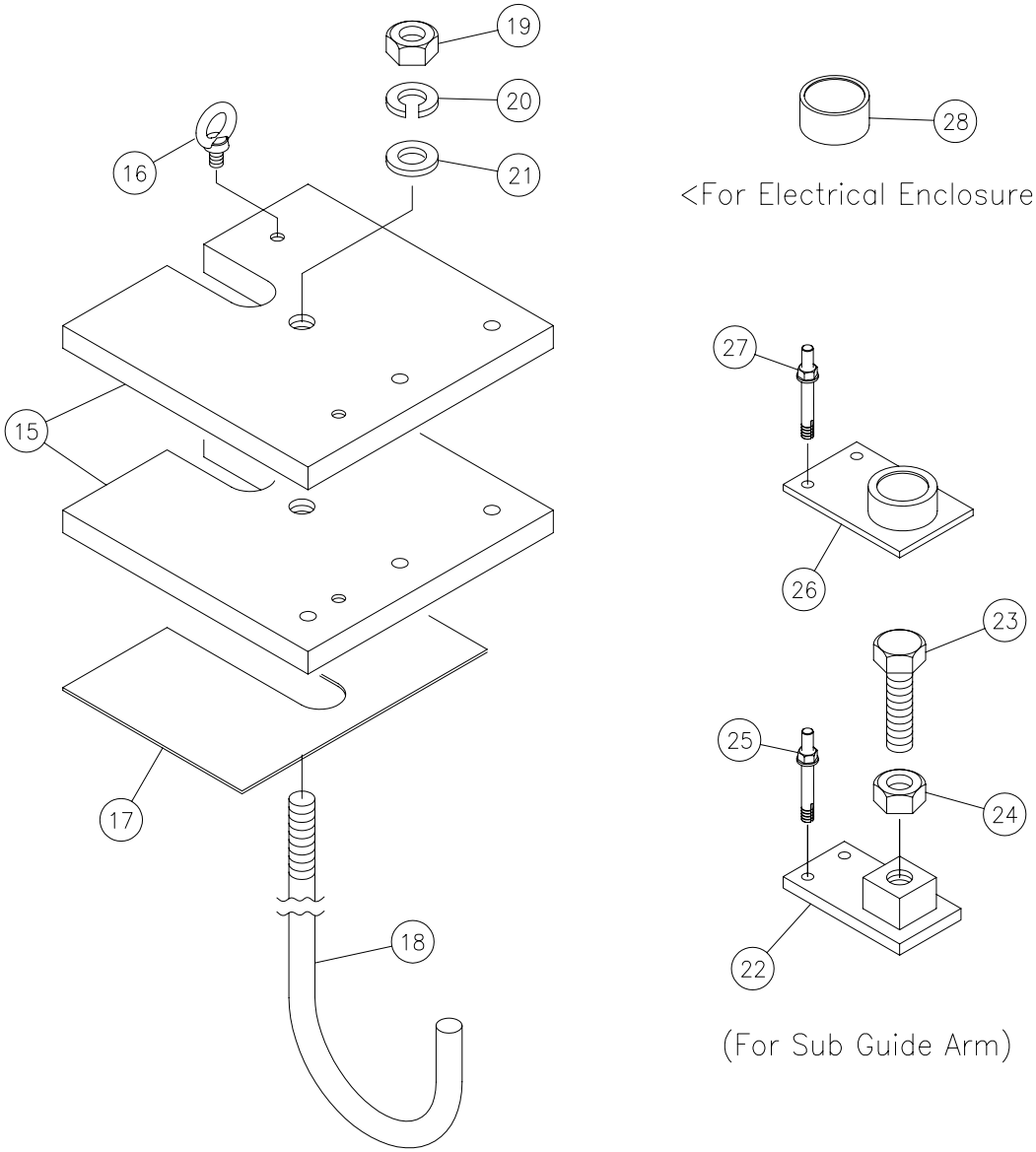

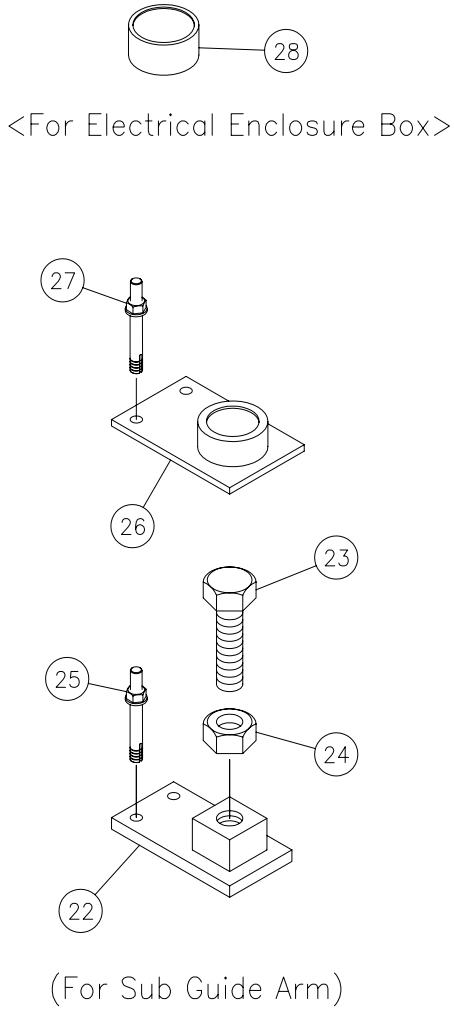

6871835
6871836
6875826
6875827
6875828

<Pass Line 1040>

From Serial No.36102001 and after

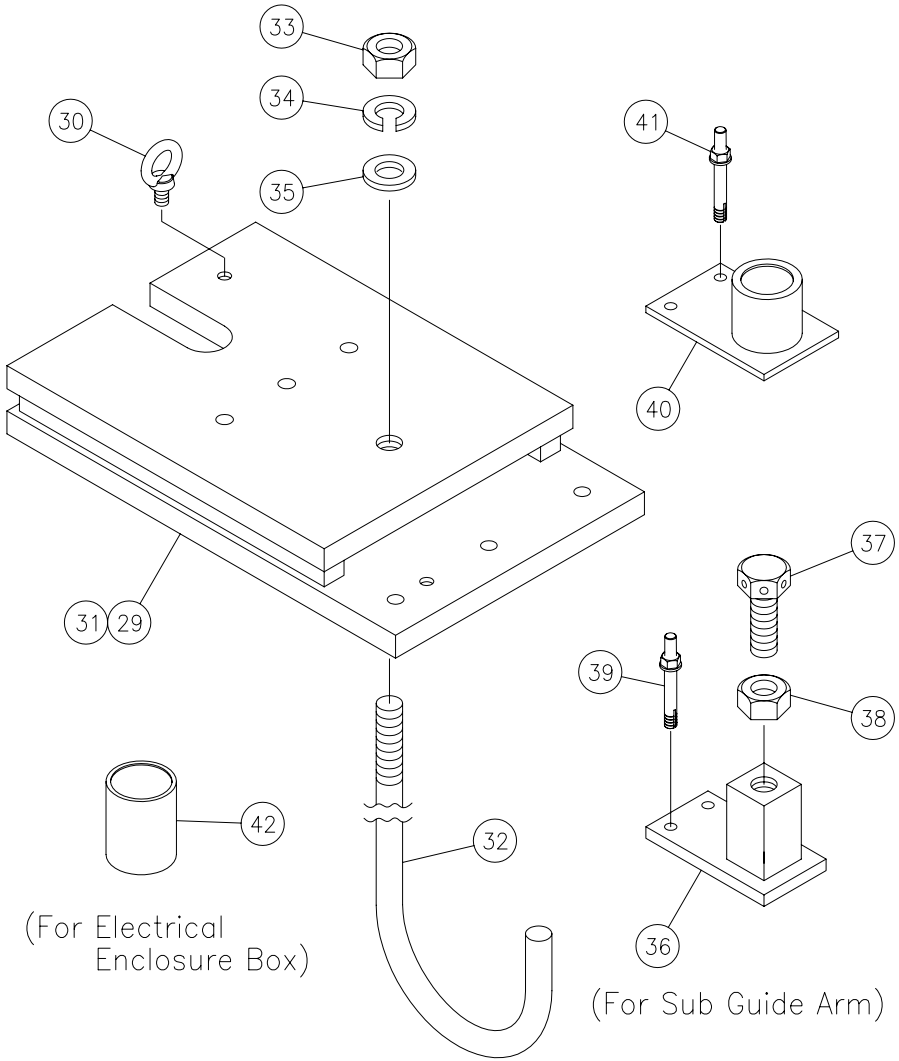

<Pass Line 1070>

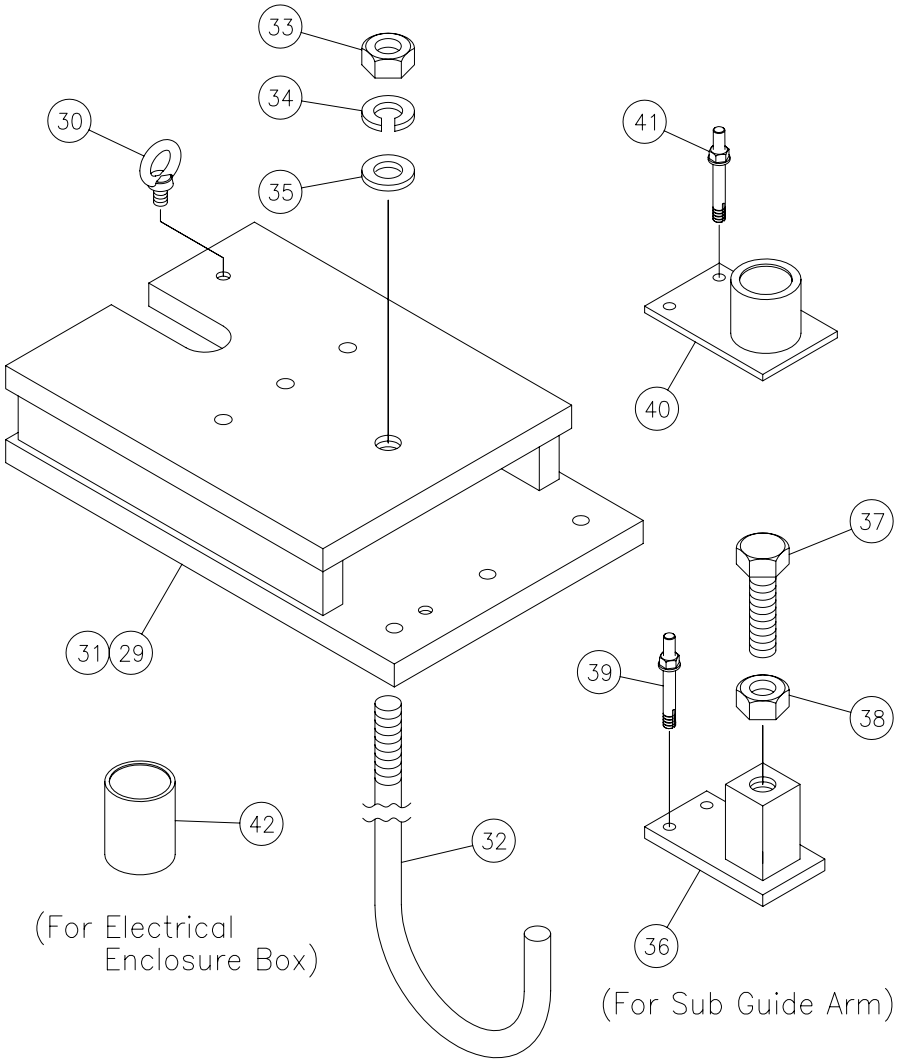

<Pass Line 1105>

6871835
6871836
6875826
6875827
6875828

Unit No. 182

Pass Line (J Anchor) From Serial No.36102001 and after

Index	Code	Parts Name	Drawing No.	Type	Maker	Q'ty	Note
1	74417250	Base Plate (T32)	6874479			4	1000.05
1	74417252	Base Plate (T40)	6874485			4	1010
2	73117631	Eye-Bolt	P338000003	M16		2	
3	74419091	Shim	6874486 A			1	1000.05
3	74419091	Shim	6874486 A			2	1010
4	74713273	Foundation Bolt	P338010011	J-M30X630		4	
5	74320426	Nut	P332000012	M30		4	
6	74382052	Spring Washer	P336050015	30		4	
7	74713272	Washer	P336000016	30(Regular Round)		4	
8	74571498	Assist Block (60)	6820776			4	
9	74569743	Adjustable Bolt (M30)	6911452	M30X90		4	
10	74320426	Nut	P332000012	M30		4	
11	86614132	Anchor	P338213005	C-1290	SANKO Technology	8	
12	74419462	Level Adjuster Base Plate	3808831			4	
13	86614132	Anchor	P338213005	C-1290	SANKO Technology	8	
14	74571497	Base Block (40)	6820778			4	
15	74417250	Base Plate (T32)	6874479			8	
16	73117631	Eye-Bolt	P338000003	M16		2	
17	74419091	Shim	6874486 A			1	

Index	Code	Parts Name	Drawing No.	Type	Maker	Q'ty	Note
18	74713273	Foundation Bolt	P338010011	J-M30X630		4	
19	74320426	Nut	P332000012	M30		4	
20	74382052	Spring Washer	P336050015	30		4	
21	74713272	Washer	P336000016	30(Regular Round)		1	
22	74571498	Assist Block (60)	6820776			4	
23	74577637	Bolt	P330090017	M30X120(All-thread)		4	
24	74320426	Nut	P332000012	M30		4	
25	86614132	Anchor	P338213005	C-1290	SANKO Technology	8	
26	74419463	Assist Base (1)	6880807			4	
27	86614132	Anchor	P338213005	C-1290	SANKO Technology	8	
28	74571497	Base Block (40)	6820778			4	
29	74570080	Base Plate (T95)	6820772			4	1070
29	74575110	Base Plate (MT135)	6820775			4	1105
30	73117631	Eye-Bolt	P338000003	M16		2	
31	74570072	Shim	6813753			2	
32	74713273	Foundation Bolt	P338010011	J-M30X630		4	
33	74320426	Nut	P332000012	M30		4	
34	74382052	Spring Washer	P336050015	30		4	
35	74713272	Washer	P336000016	30(Regular Round)		4	

Unit No. 182

Pass Line (J Anchor) From Serial No.36102001 and after

Index	Code	Parts Name	Drawing No.	Type	Maker	Q'ty	Note
36	74571499	Assist Block (120)	6820777			4	
37	74569743	Adjustable Bolt (M30)	6911452	M30X90		4	1070
37	74577637	Bolt	P330090017	M30X120(All-thread)		4	1105
38	74320426	Nut	P332000012	M30		4	
39	86614132	Anchor	P338213005	C-1290	SANKO Technology	8	
40	74419464	Assist Base	6879668			4	
41	86614132	Anchor	P338213005	C-1290	SANKO Technology	8	
42	74575115	Base Block (100)	6820779			4	

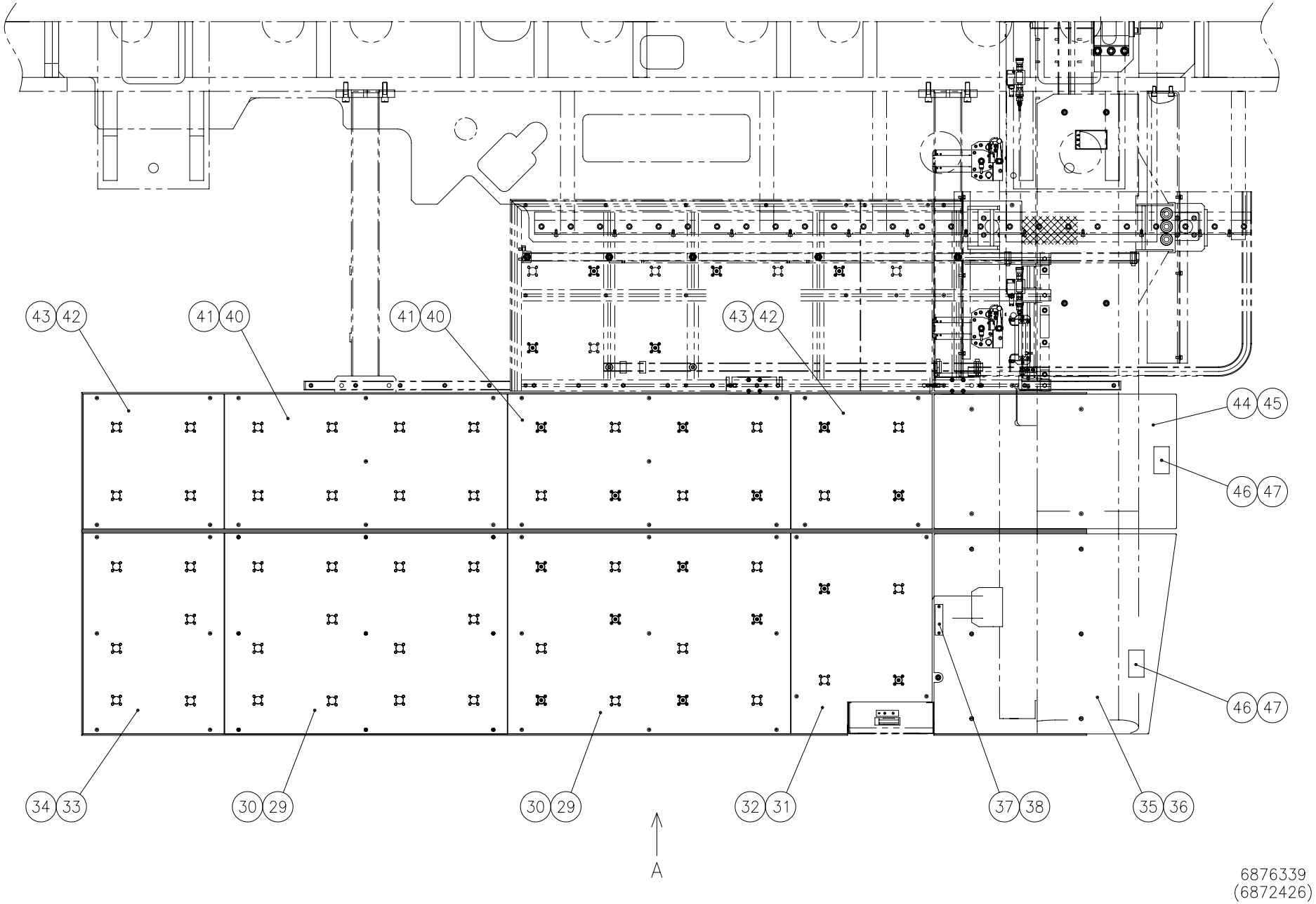
43 42
41 40
41 40
43 42
44 45
46 47
46 47
34 33
30 29
30 29
32 31
37 38
35 36
A
6876339
(6872426)

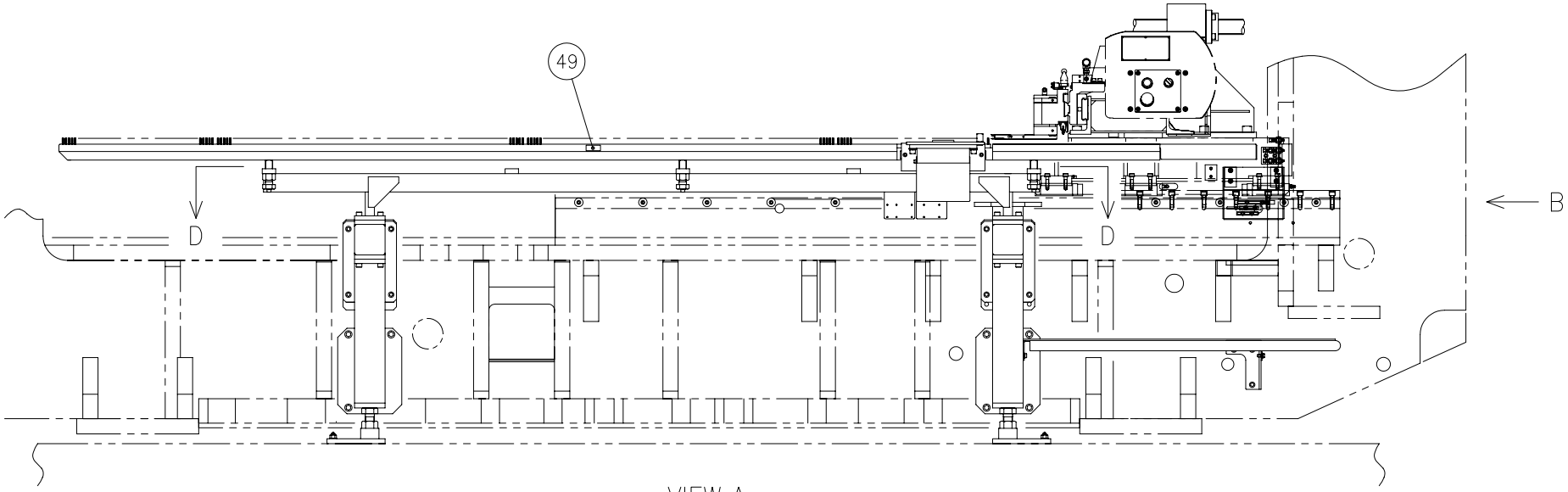

VIEW A

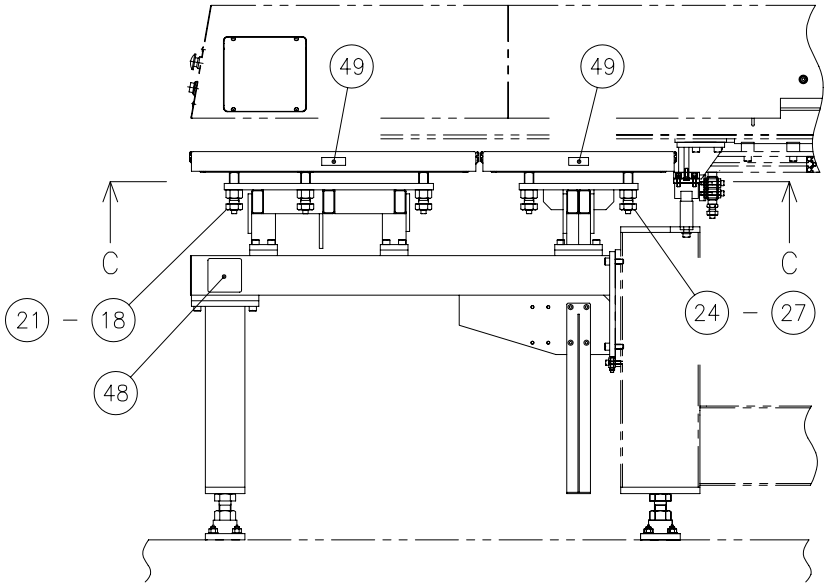

VIEW B

6876339
(6872426)

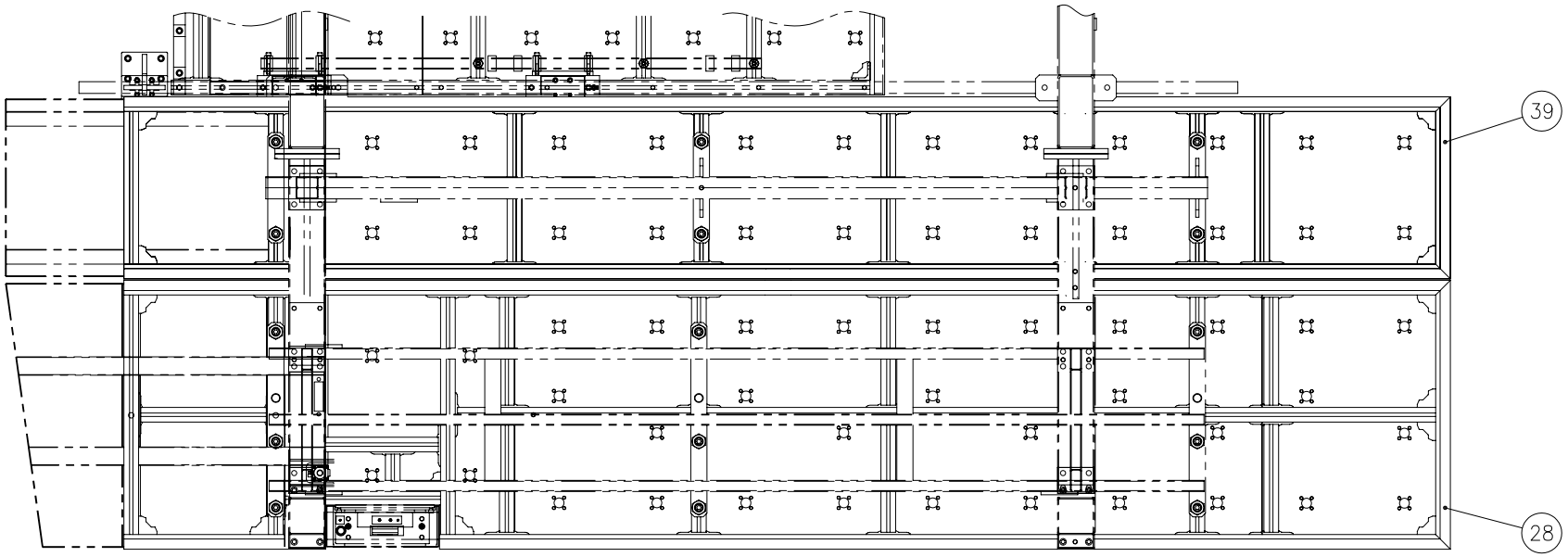

SECTION C–C

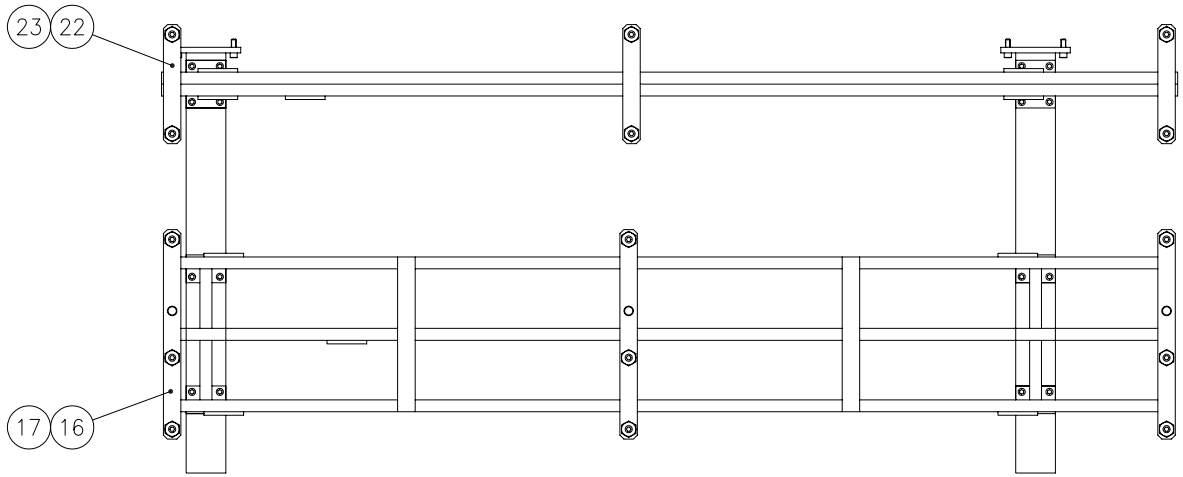

SECTION D–D

6876339
(6872426)

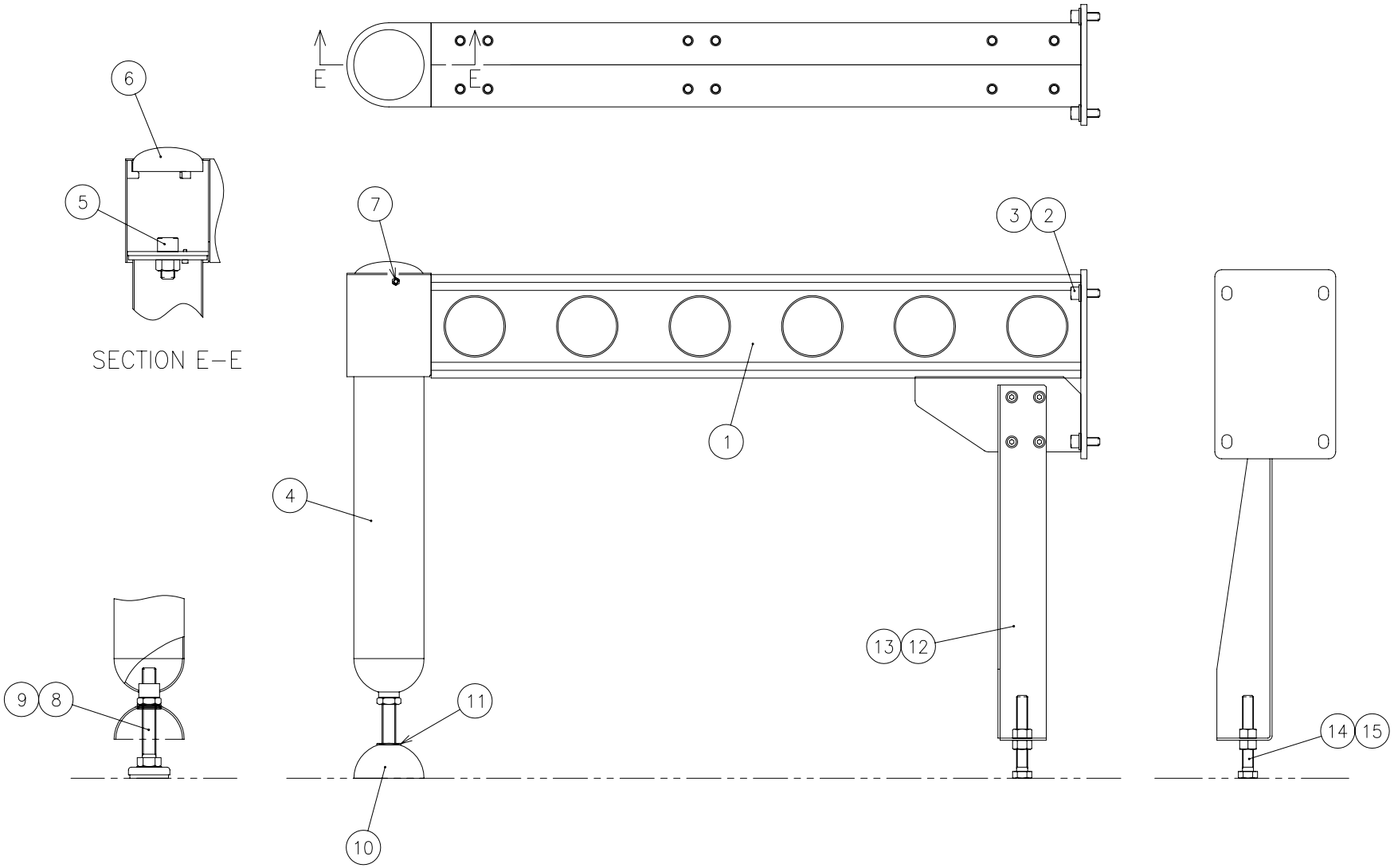

6879685

Index	Code	Parts Name	Drawing No.	Type	Maker	Q'ty	Note
1	74419472	Side Table Base (R)	380787100A			1	
2	36367655	Hex Soc Cap Screw	P330250005	M12X30		4	
3	86613931	Washer	P336000008	12(Regular Round)		4	
4	74419473	Stand	6879686			1	
5	36320521	Hex Soc Cap Screw	P330270003	M20X40		1	
6	74419474	Cap	6879678			1	
7	86620204	Socket Set Screw	P330590019	M6X10(Cup-end)		1	
8	74570064	Level Adjuster	P384022021	KC-280-0	TAKIGEN	1	
9	10380040	Nut	P332000023	M20(Thin)		1	
10	74419475	Level Adjuster Cover	3807879			1	
11	31100028	Bush For Cable	P229112053	C-30-NG-79-Q	TAKIGEN	1	
12	74419476	Shipping Bracket	3807874 A			1	
13	75420815	Flange Socket Bolt	P330468001	M8X20	NISSAN NEJI	4	
14	36163072	Bolt	P330060076	M16X120(All-thread)		1	
15	86611630	Nut	P332000066	M16(Type-1)		1	
16	74578812	Side Table Frame (1)	6823892 A			1	
17	36110743	Hex Soc Cap Screw	P330250006	M12X35		16	
18	74569742	Jack Screw	6821834			9	
19	71371592	Nut	P332000011	M24		9	

Index	Code	Parts Name	Drawing No.	Type	Maker	Q'ty	Note
20	79316161	Hex Soc Cap Screw	P330230024	M8X110		9	
21	79567109	Washer	P336000006	8(Regular Round)		9	
22	74578813	Side Table Frame (2)	6823893 A			1	
23	36110743	Hex Soc Cap Screw	P330250006	M12X35		8	
24	74569742	Jack Screw	6821834			6	
25	71371592	Nut	P332000011	M24		6	
26	79316161	Hex Soc Cap Screw	P330230024	M8X110		6	
27	79567109	Washer	P336000006	8(Regular Round)		6	
28	74419477	Fixed Table (F) A	7830940 A		NIC	1	
29	74571312	MDF Brush (K-4)	6823663 A			2	
30	74722756	Button Head Screw	P334500021	M8X25		18	
31	74571269	MDF Brush (K-5)	6821845 B			1	
32	74722756	Button Head Screw	P334500021	M8X25		4	
33	74571270	MDF Brush (K-8)	6823665 A			1	
34	74722756	Button Head Screw	P334500021	M8X25		6	
35	74418378	Cover Table (F-1)	6823013 B			1	
36	79565423	Hex Soc Cap Screw	P330230004	M8X15		6	
37	74569764	Maintenance Cover	6812712			1	
38	31179660	Button Head Screw	P334500009	M5X10		2	

Index	Code	Parts Name	Drawing No.	Type	Maker	Q'ty	Note
39	74578815	Fixed Table (F) B	7830865		NIC	1	
40	74415176	MDF Brush (K-1)	6823635			2	3.2mm
40	74575212	MDF Brush (K-1)	6823846			2	4.5mm
41	74722756	Button Head Screw	P334500021	M8X25		14	
42	74415177	MDF Brush (K-3)	6823636			2	3.2mm
42	74575185	MDF Brush (K-3)	6823847			2	4.5mm
43	74722756	Button Head Screw	P334500021	M8X25		8	
44	74415449	Cover Table (F-2)	6823844 A			1	
45	79565423	Hex Soc Cap Screw	P330230004	M8X15		4	
46	71362136	Legend Plate (Warning)(3)	6045924			2	English
46	71362135	Legend Plate (Warning)(3) FRA	6045078			2	French
46	71362137	Legend Plate (Warning)(3) GER	6046718			2	German
46	71362138	Legend Plate (Warning)(3) ITA	6046728			2	Italian
46	74415924	Legend Plate (Warning)(3)	6816795			2	Chinese
47	74326603	Blind Rivet	P339208001	NTA3-2	LOBTEX	8	
48	74419480	Legend Plate (Caution) E	3809322	(DO NOT LIFT HERE)		2	English
48	74419481	Legend Plate (Caution) F	3809323			2	French
48	74419479	Legend Plate (Caution) G	3809321			2	German
48	74419482	Legend Plate (Caution) I	3809324			2	Italian

Index	Code	Parts Name	Drawing No.	Type	Maker	Q'ty	Note
48	74419478	Legend Plate (Caution) C	3809319			2	Chinese
49	71130447	Legend Plate (Do Not Get On)	0840546			5	
50	74417405	Sticker (Fixed Table)(Export)	6871975			1	List Only
51	74419483	Adhesive Tape	P379108025	FE-6061 (20mm)	FANTAC	5	1M (List Only)

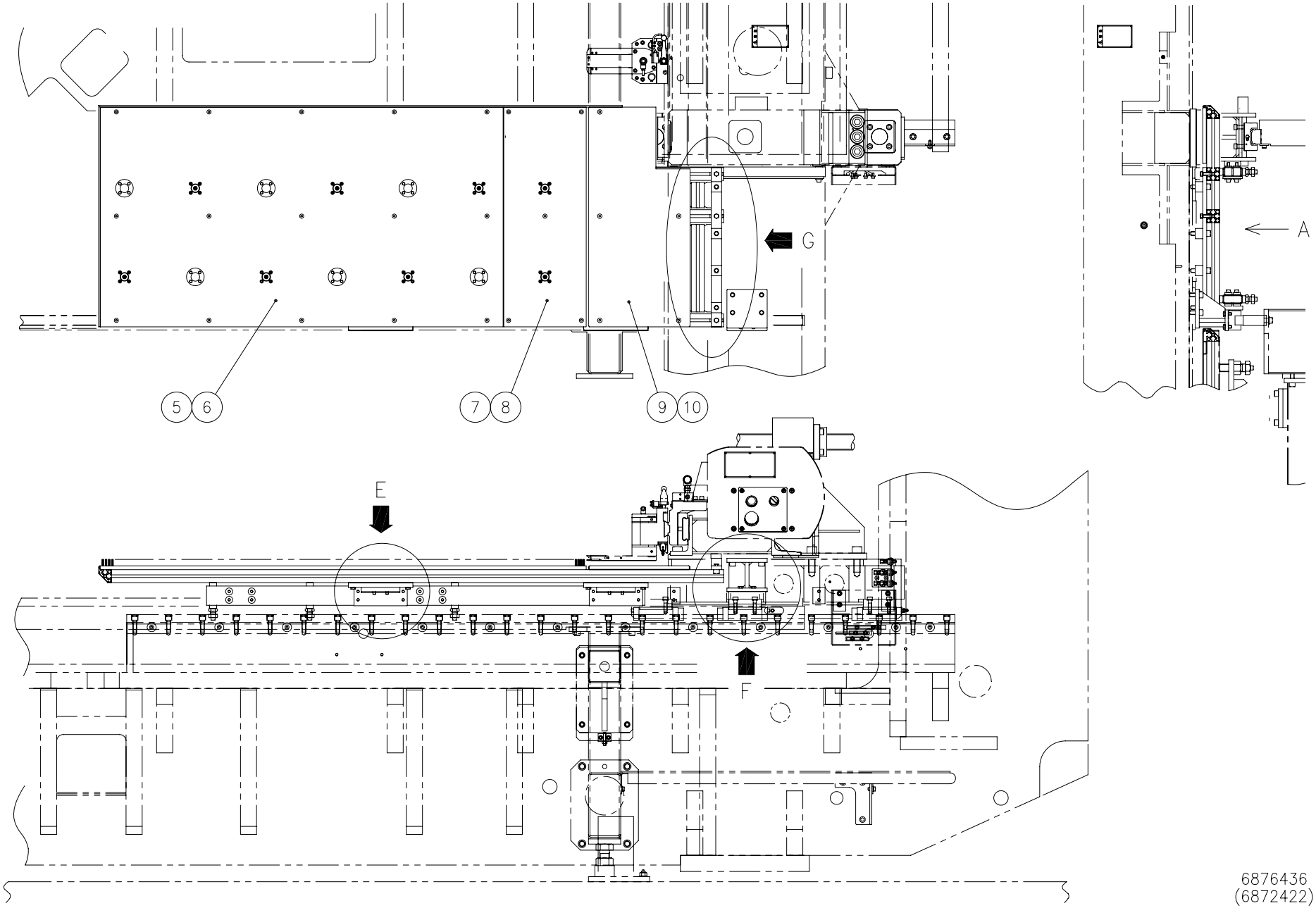
G
A
5
6
7
8
9
10
E
F
6876436
(6872422)

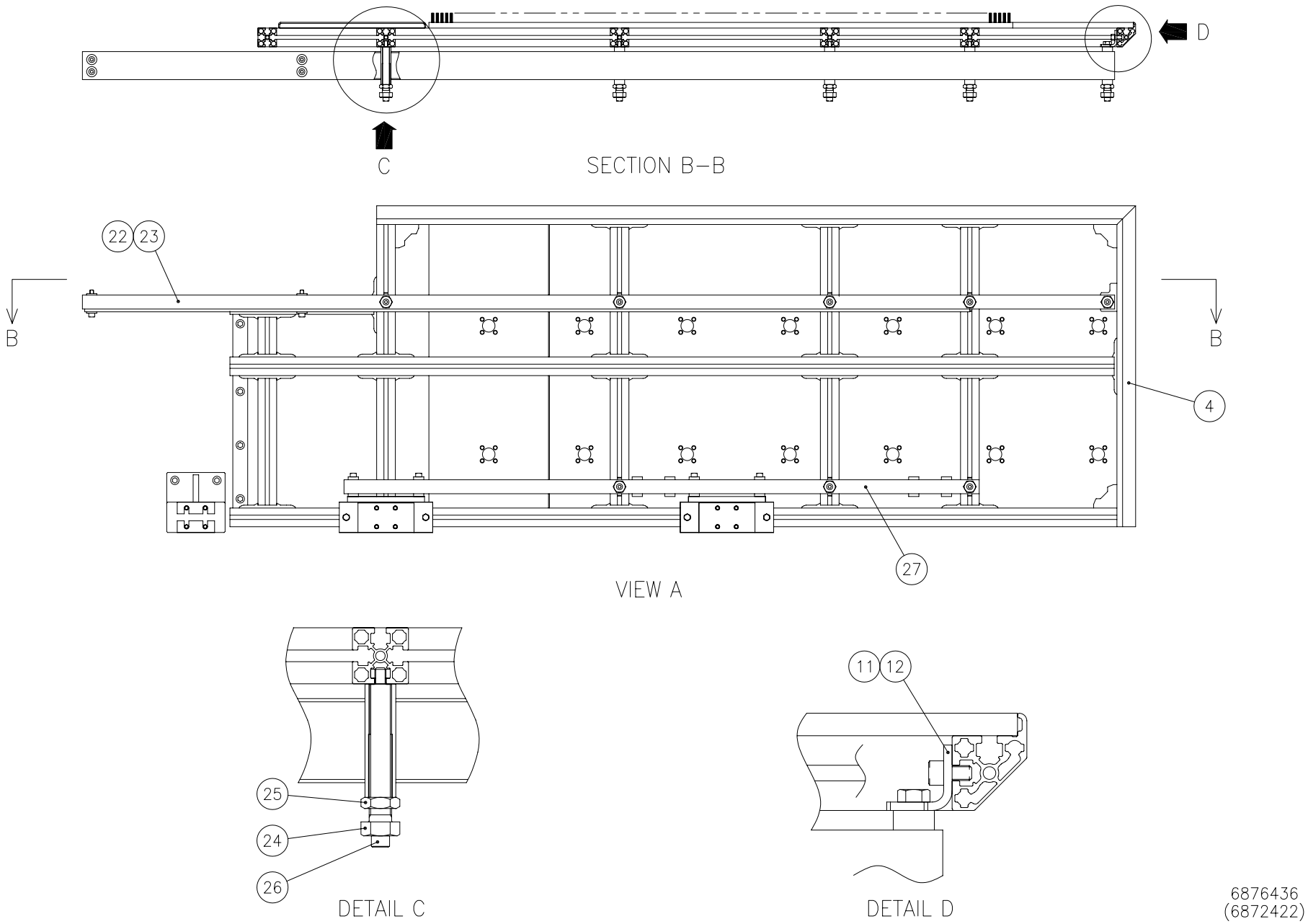
D
C
SECTION B–B
22
23
B
B
4
27
VIEW A
25
24
26
DETAIL C
11
12
DETAIL D
6876436
(6872422)

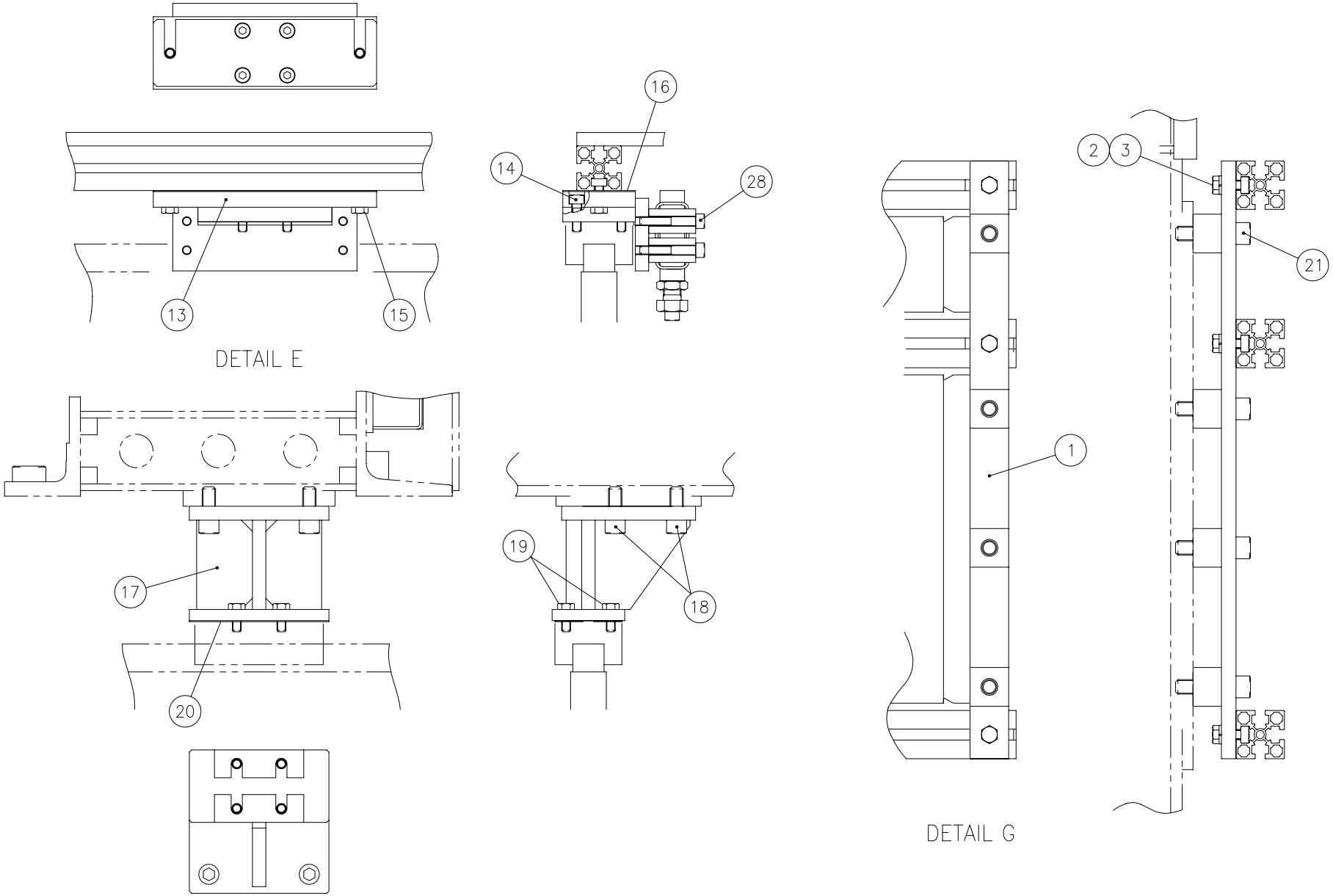

6876436
(6872422)

Index	Code	Parts Name	Drawing No.	Type	Maker	Q'ty	Note
1	74415465	Table Spacer	6828647			1	
2	74183005	Bolt	P330030007	M8X25		3	
3	86610326	Spring Washer	P336050006	8		3	
4	74418375	Moving Table (F)	7830942		NIC	1	
5	74415175	MDF Brush (I-1)	6823682			1	3.2mm
5	74571284	MDF Brush (I-1)	6823627 A			1	4.5mm
6	74722756	Button Head Screw	P334500021	M8X25		15	
7	74578826	MDF Brush (I-2)	6823683			1	3.2mm
7	74571327	MDF Brush (I-2)	6823628 A			1	4.5mm
8	74722756	Button Head Screw	P334500021	M8X25		5	
9	74415444	Cover Table (S-F)	6828649			1	
10	79565423	Hex Soc Cap Screw	P330230004	M8X15		5	
11	74415467	Angle	6828651 A			1	
12	79565423	Hex Soc Cap Screw	P330230004	M8X15		2	
13	74418396	LM Support	6872480			2	
14	79566121	Hex Soc Cap Screw	P330230007	M8X25		8	
15	74183005	Bolt	P330030007	M8X25		4	
16	74571308	Shim	6823604			2	
17	74415468	Moving Table Bracket	6828648			1	

Index	Code	Parts Name	Drawing No.	Type	Maker	Q'ty	Note
18	36367655	Hex Soc Cap Screw	P330250005	M12X30		4	
19	36176605	Bolt	P330030006	M8X20		4	
20	74571309	Shim	6826306			2	
21	79316507	Hex Soc Cap Screw	P330250009	M12X50		4	
22	74418397	Table Guide	6872436	R60X30X2.3		1	
23	10443146	Hex Soc Cap Screw	P330230012	M8X50		4	
24	74415446	Adjustable Bolt	6822812 A			8	
25	78180815	Nut	P332000022	M16(Thin)		8	
26	74707962	Hex Soc Cap Screw	P330230026	M8X120		8	
27	74418398	Auxiliary Arm (1)	6872481	R60X30X2.3		1	
28	10443146	Hex Soc Cap Screw	P330230012	M8X50		8	

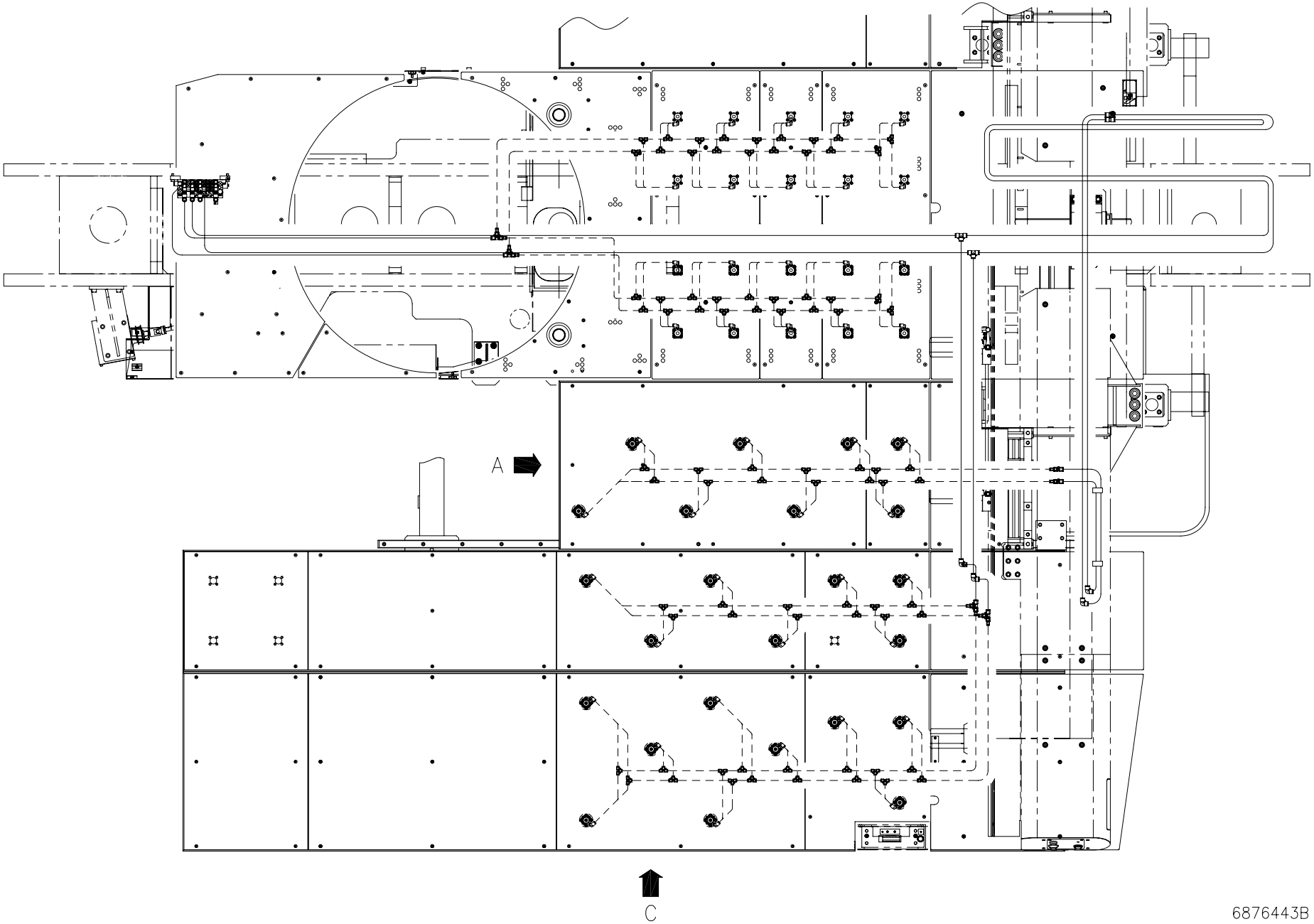
A
C
6876443B

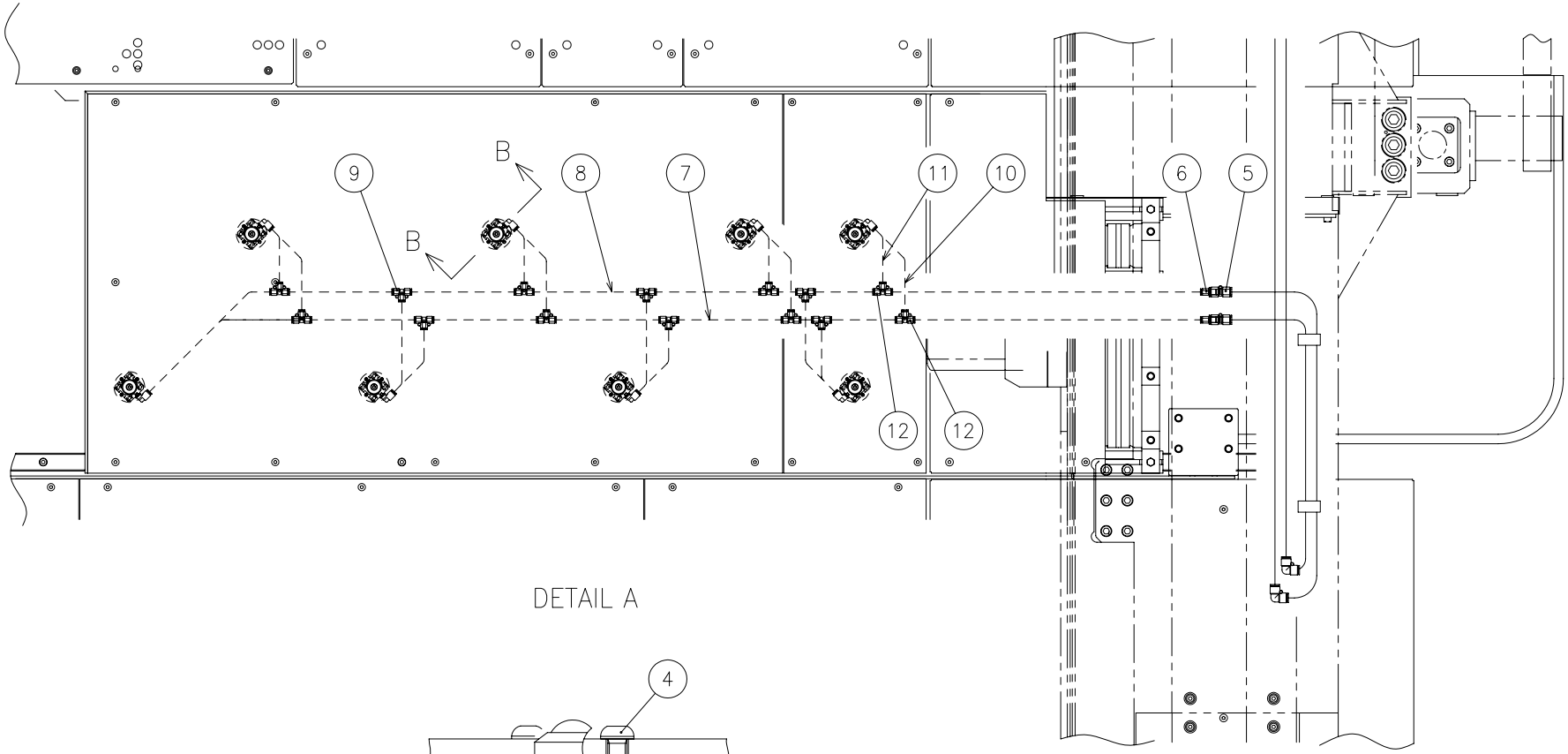

DETAIL A

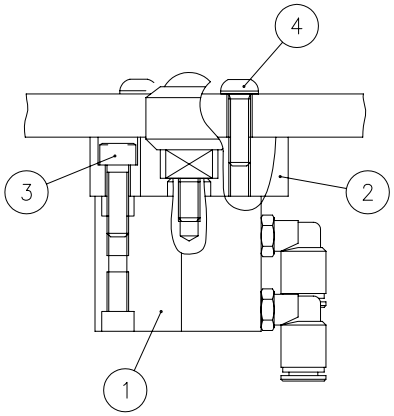

SECTION B–B (8 Sets)

6876443B

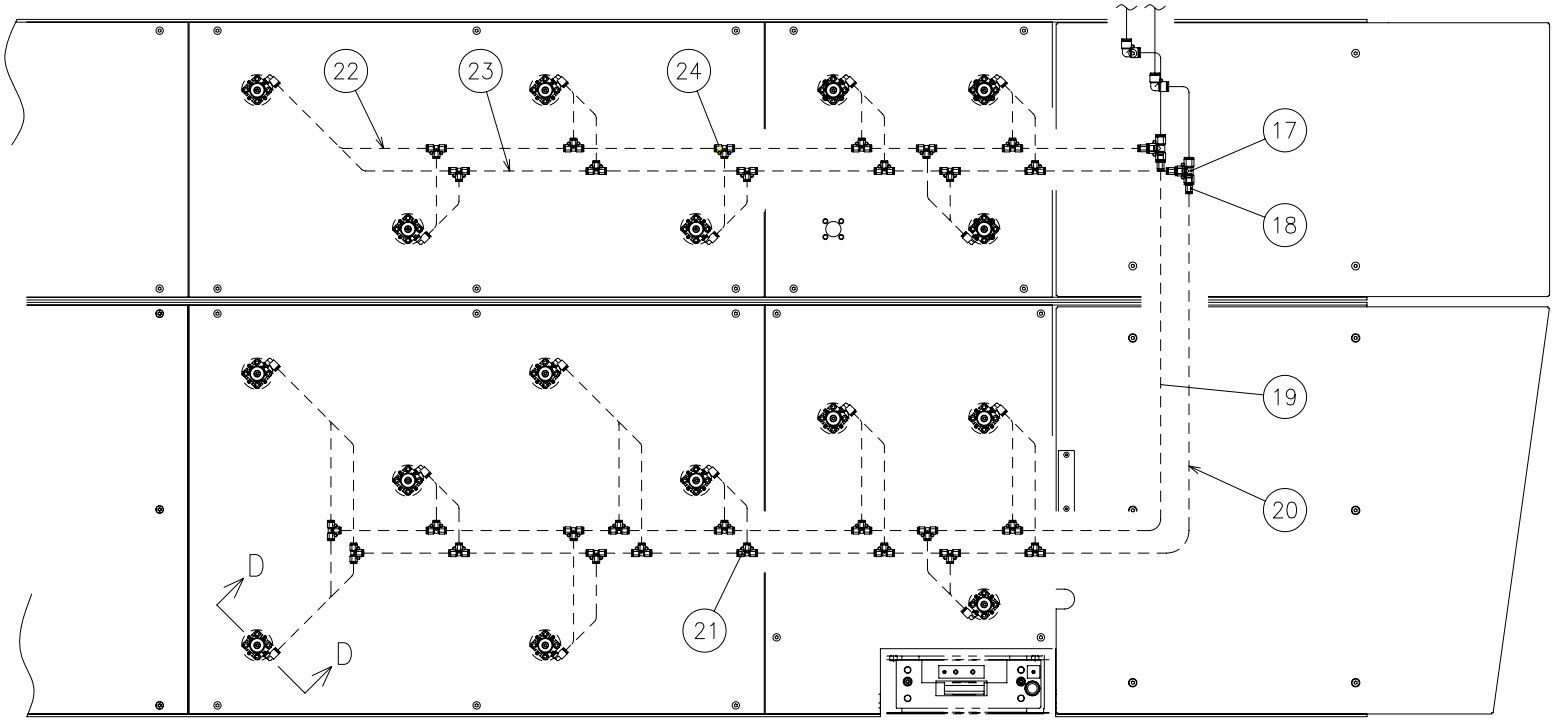

DETAIL C

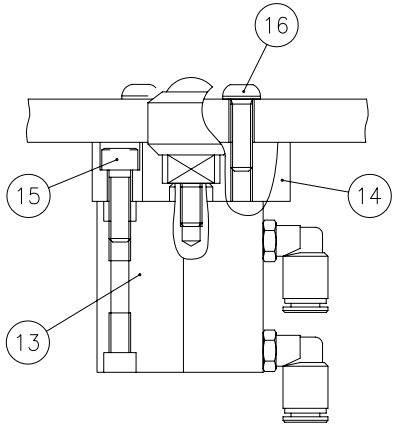

SECTION D–D (16 Sets)

6876443B

Index	Code	Parts Name	Drawing No.	Type	Maker	Q'ty	Note
1	74568593	Cylinder	7832806 A	SSD-25-15	CKD	1	
2	74569774	Cylinder Collar	6821848			1	
3	79567722	Hex Soc Cap Screw	P330220009	M6X20		4	
4	74314603	Button Head Screw	P334500016	M6X20		4	
5	74565147	Instant Fitting	P586604021	EUC10	NITTA MOORE	2	
6	74562784	Instant Fitting	P586654002	ER6-10	NITTA MOORE	2	
7	74415492	Plastic Hose	P230222148	N2-4-6X4(Blue)-10M	NITTA MOORE	1	
8	74415488	Plastic Hose	P230222149	N2-4-6X4(Red)-10M	NITTA MOORE	1	
9	74338327	Instant Fitting	P586604012	EUT6	NITTA MOORE	12	
10	74415492	Plastic Hose	P230222157	N2-4-6X4(Blue)-1M	NITTA MOORE	1	
11	74415488	Plastic Hose	P230222158	N2-4-6X4(Red)-1M	NITTA MOORE	1	
12	74338327	Instant Fitting	P586604012	EUT6	NITTA MOORE	2	
13	74568610	Cylinder	7832804 A	SSD-L-25-15-T5V5-H	CKD	1	
14	74569774	Cylinder Collar	6821848			1	
15	79567722	Hex Soc Cap Screw	P330220009	M6X20		4	
16	74314603	Button Head Screw	P334500016	M6X20		4	
17	74379378	Instant Fitting	P586604013	EUT10	NITTA MOORE	2	
18	74562784	Instant Fitting	P586654002	ER6-10	NITTA MOORE	4	
19	74415492	Plastic Hose	P230222148	N2-4-6X4(Blue)-10M	NITTA MOORE	1	

Index	Code	Parts Name	Drawing No.	Type	Maker	Q'ty	Note
20	74415488	Plastic Hose	P230222149	N2-4-6X4(Red)-10M	NITTA MOORE	1	
21	74338327	Instant Fitting	P586604012	EUT6	NITTA MOORE	16	
22	74415492	Plastic Hose	P230222148	N2-4-6X4(Blue)-10M	NITTA MOORE	1	
23	74415488	Plastic Hose	P230222149	N2-4-6X4(Red)-10M	NITTA MOORE	1	
24	74338327	Instant Fitting	P586604012	EUT6	NITTA MOORE	12	

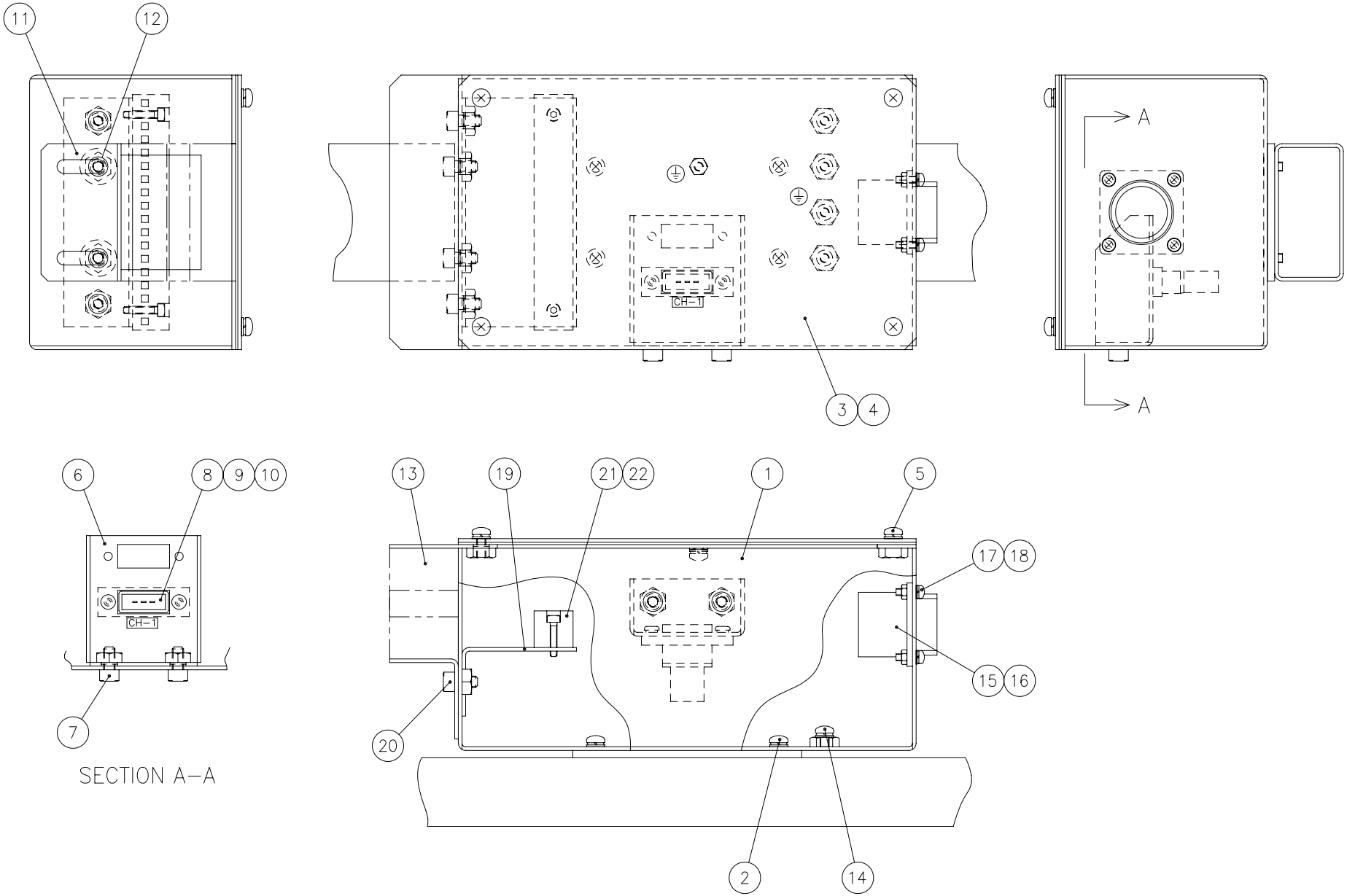
11
12
CH-1
3
4
A
A
6
8
9
10
CH-1
7
SECTION A-A
13
19
21
22
1
5
17
18
15
16
20
2
14
6824760A

Index	Code	Parts Name	Drawing No.	Type	Maker	Q'ty	Note
1	74415498	Relay Box (F)	6824761 A			1	
2	74570030	Pan Head Screw with Washer	P334200115	M4X10(Chromate P-4)		4	
3	74575225	Relay Box (F) Cover	6824762			1	
4	74575227	Packing (F)	6824763			1	
5	74570033	Pan Head Screw with Washer	P334200134	M5X10(Chromate P-4)		4	
6	74575149	Housing Plate (FC)	6826465			1	
7	79573416	Hex Soc Cap Screw	P330210003	M5X10		2	
8	74386502	Rectangle Connector	P862042073	1-178802-3	AMP	1	
9	74386503	Plug Type Terminal	P862142036	175289-5	AMP	3	
10	74386505	Accessory For Connector	P862182002	900128-2	AMP	2	
11	74387019	Cable Clamp (FC)	6596069			1	
12	79573416	Hex Soc Cap Screw	P330210003	M5X10		2	
13	74387020	Sponge Rubber	P230580063	CR-T20X20X60		2	
14	74569811	Pan Head Screw with Washer	P334200113	M4X6(Chromate P-4)		5	(Ground)
15	74521705	Plastic R Connector	P862032003	206036-1	AMP	1	
16	74384510	Plug Type Terminal	P862142020	66400-1	AMP	11	
17	74570051	Pan Head Screw with Washer	P334200109	M3X10(Chromate P-4)		4	
18	74307616	Nut	P332000001	M3		4	
19	74575145	Bracket (F)	6824764			1	

From Serial No.36102001 and after

Index	Code	Parts Name	Drawing No.	Type	Maker	Q'ty	Note
20	79573416	Hex Soc Cap Screw	P330210003	M5X10		2	
21	74569809	Block Terminal	P864008047	MK4/16KRG	WEIDMULLER	1	
22	79316101	Hex Soc Cap Screw	P330200006	M3X15		2	

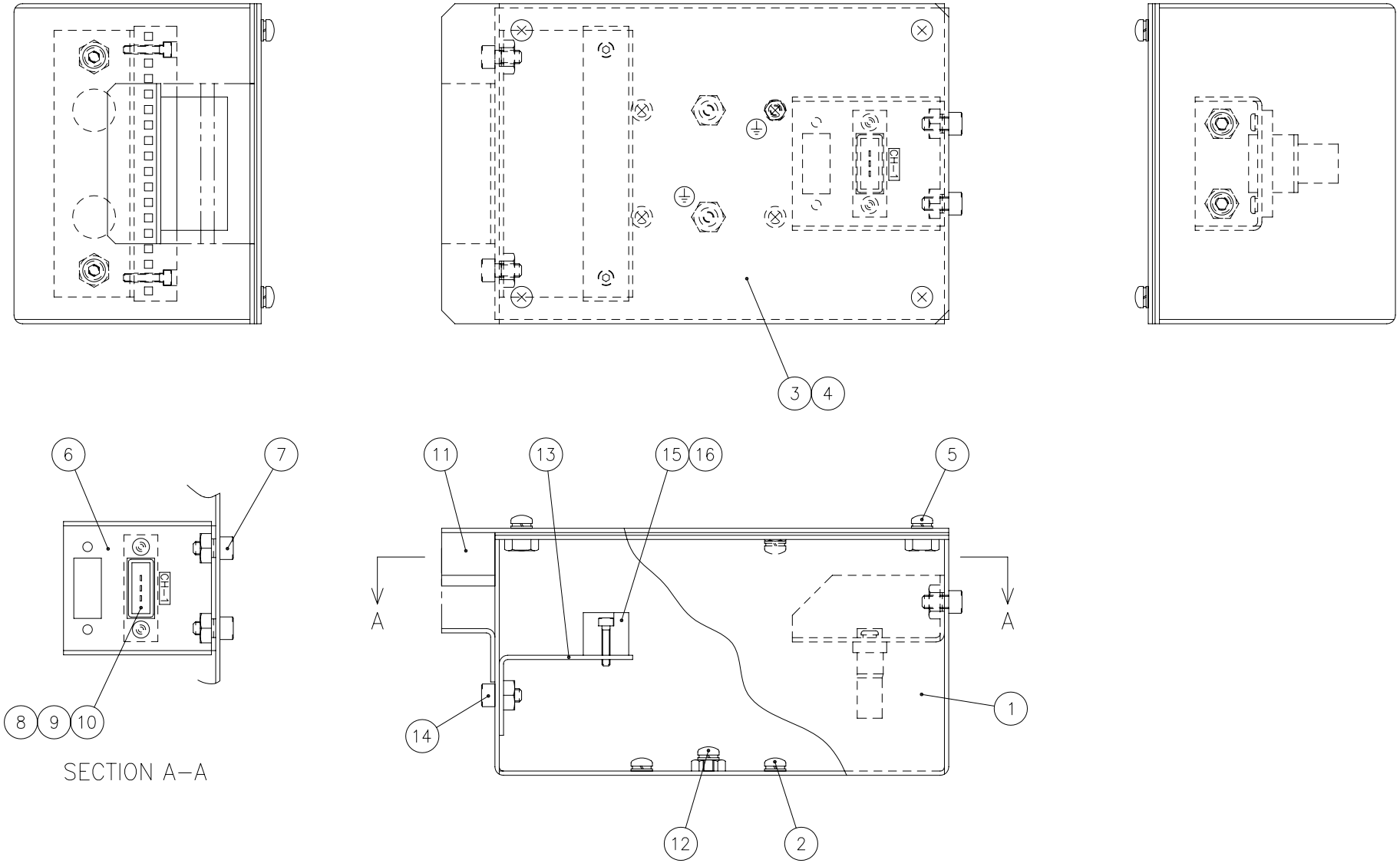

6824766

Unit No. 187

MP-C(5) From Serial No.36102001 and after

Index	Code	Parts Name	Drawing No.	Type	Maker	Q'ty	Note
1	74575144	Relay Box (FC)	6824767			1	
2	74570030	Pan Head Screw with Washer	P334200115	M4X10(Chromate P-4)		4	
3	74575147	Relay Box (FC) Cover	6824768			1	
4	74575224	Packing (FC)	6824769			1	
5	74570033	Pan Head Screw with Washer	P334200134	M5X10(Chromate P-4)		4	
6	74575149	Housing Plate (FC)	6826465			1	
7	79573416	Hex Soc Cap Screw	P330210003	M5X10		2	
8	74386502	Rectangle Connector	P862042073	1-178802-3	AMP	1	
9	74386503	Plug Type Terminal	P862142036	175289-5	AMP	3	
10	74386505	Accessory For Connector	P862182002	900128-2	AMP	2	
11	74387020	Sponge Rubber	P230580063	CR-T20X20X60		2	
12	74569811	Pan Head Screw with Washer	P334200113	M4X6(Chromate P-4)		3	(Ground)
13	74575145	Bracket (F)	6824764			1	
14	79573416	Hex Soc Cap Screw	P330210003	M5X10		2	
15	74569809	Block Terminal	P864008047	MK4/16KRG	WEIDMULLER	1	
16	79316101	Hex Soc Cap Screw	P330200006	M3X15		2	

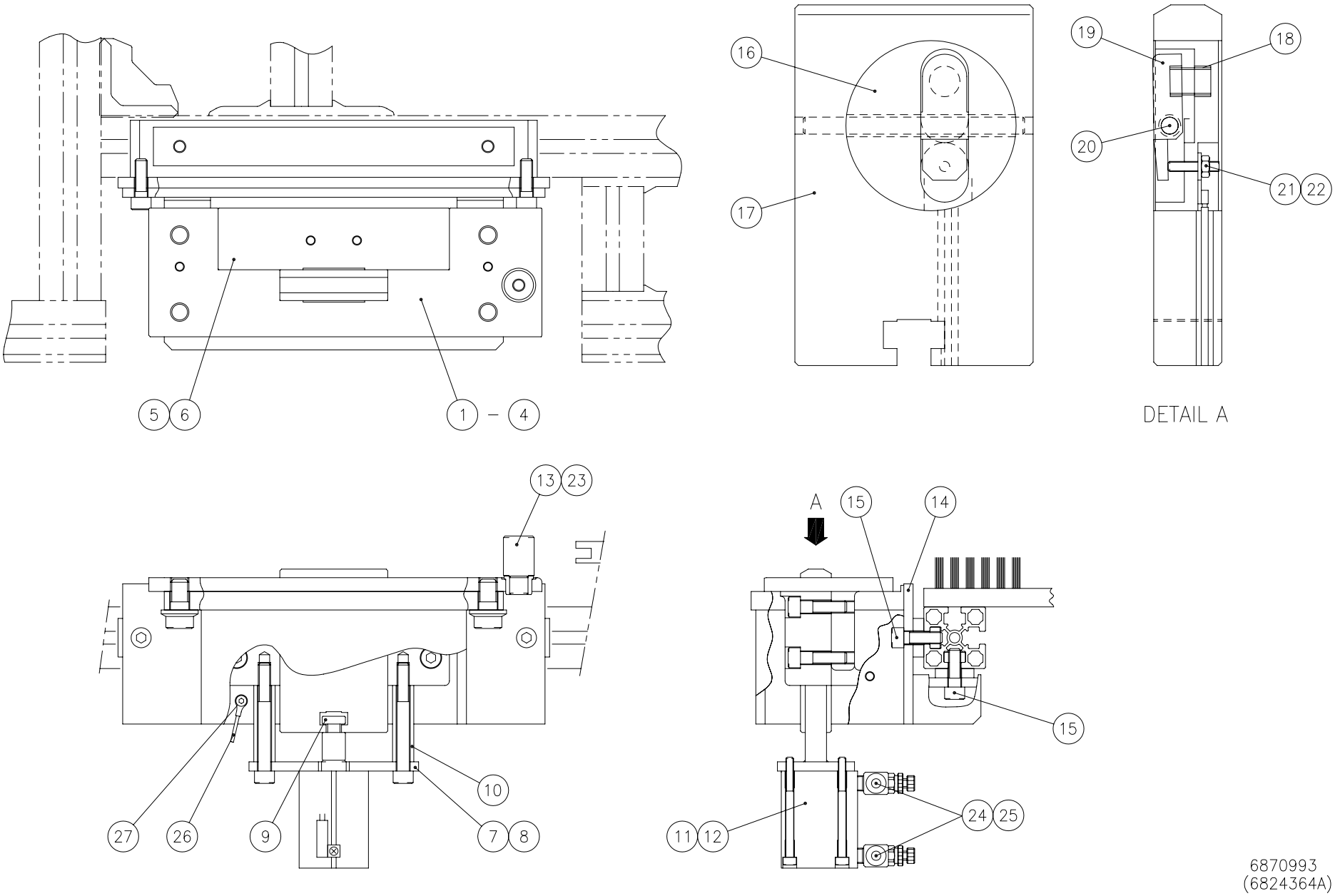
5
6
1 – 4
16
17
19
18
20
21
22
DETAIL A
13
23
A
15
14
15
10
27
26
9
7
8
11
12
24
25
6870993
(6824364A)

Index	Code	Parts Name	Drawing No.	Type	Maker	Q'ty	Note
1	74563933	Locating Pin Guide A	6572986 E			1	
2	79568704	Hex Soc Cap Screw	P330250004	M12X25		4	
3	86610819	Spring Washer	P336050008	12		4	
4	86613931	Washer	P336000008	12(Regular Round)		4	
5	74382816	Locating Pin Guide	6572978 B			1	
6	79568702	Hex Soc Cap Screw	P330230008	M8X30		4	
7	74722137	Cylinder Guide B	6533802			1	
8	36326825	Hex Soc Cap Screw	P330230016	M8X70		2	
9	74382977	Locating Pin Collar	6533803 A			1	
10	74382979	Cylinder Guide A	6533807			2	
11	74415497	Cylinder	7832807 A	CDQ2B32D-W0501-30	SMC	1	
12	79316159	Hex Soc Cap Screw	P330210018	M5X65		4	
13	74389511	Stopper Pin Bushing	6578599 B			1	
14	74578845	Locating Pin Bracket	6597285 B			1	
15	79566121	Hex Soc Cap Screw	P330230007	M8X25		4	
16	74382996	Stopper With Sensor	6533862 B			1	
17	74387231	Insulator	0829976 C	MC801		1	
18	71361522	Spring	0829622 A			1	
19	74573709	X-axis Touch Sensor Assy	0829974 C			1	

Index	Code	Parts Name	Drawing No.	Type	Maker	Q'ty	Note
20	74561072	Straight Pin	0829975 A			1	
21	74571503	Socket Set Screw	P330550179	M3X15(Flat-end)-A2-70		1	
22	74716014	Nut	P332000014	M3(Thin)		1	
23	74389510	Stopper Pin	6572979 B			1	
24	74569814	Plastic Hose	P230222101	U2-4-6X4(Red)-2M	NITTA MOORE	1	
25	71512277	Plastic Hose	P230222102	U2-4-6X4(Blue)-2M	NITTA MOORE	1	
26	74415496	Cable CR-6 (PE)	6827405			1	(Ground)
27	79574601	Hex Soc Cap Screw	P330200015	M4X10		1	(Ground)
28	74575274	Cable F-19	6824586			1	List Only

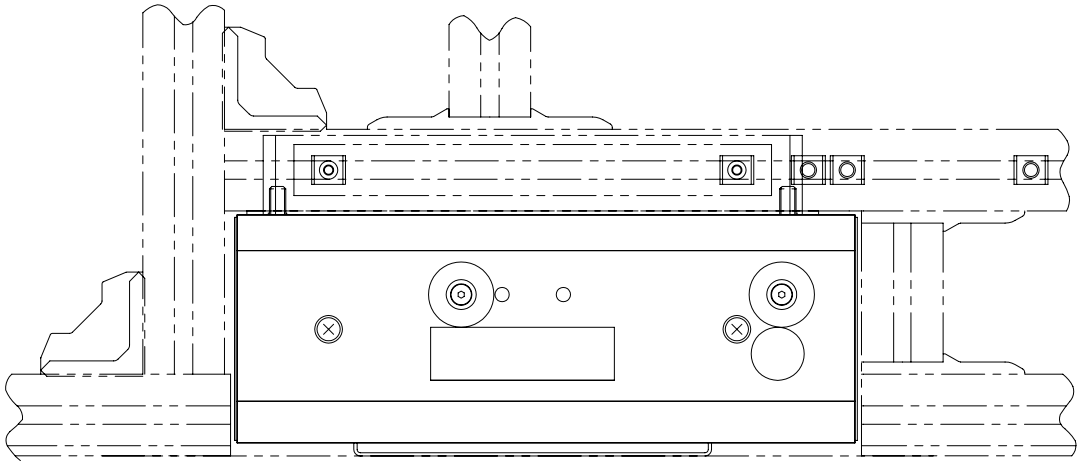

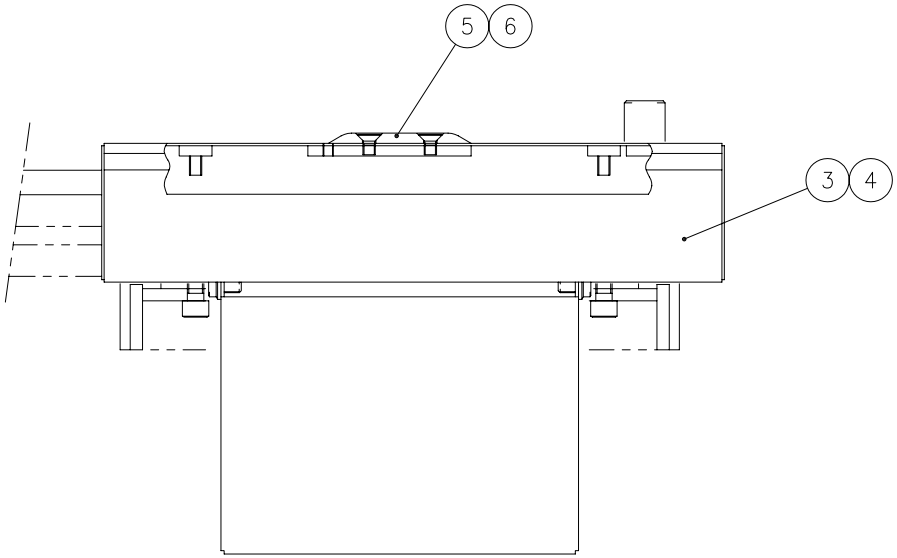

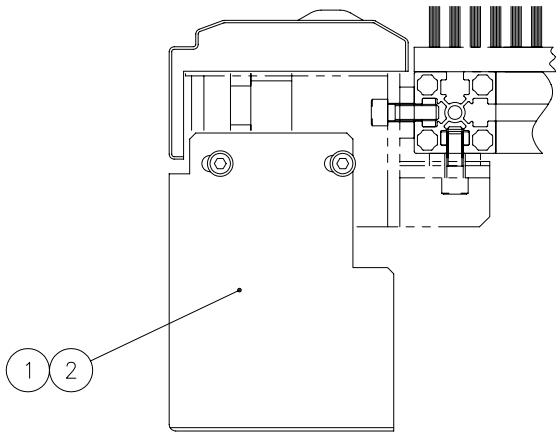

6827319
(6823658)

Unit No. 189

MP-C(7) From Serial No.36102001 and after

Index	Code	Parts Name	Drawing No.	Type	Maker	Q'ty	Note
1	74575629	Side Cover	6813196 A			1	
2	75428708	Flange Socket Bolt	P330468015	M6X10	NISSAN NEJI	4	
3	74571329	Locating Pin Cover (A)	6823659			1	
4	31183551	Flat Head Bolt	P334520001	M6X15		2	
5	74562417	Support Plate (NJ)	6599304 A			2	
6	79321267	Flat Head Bolt	P334520006	M5X10		2	

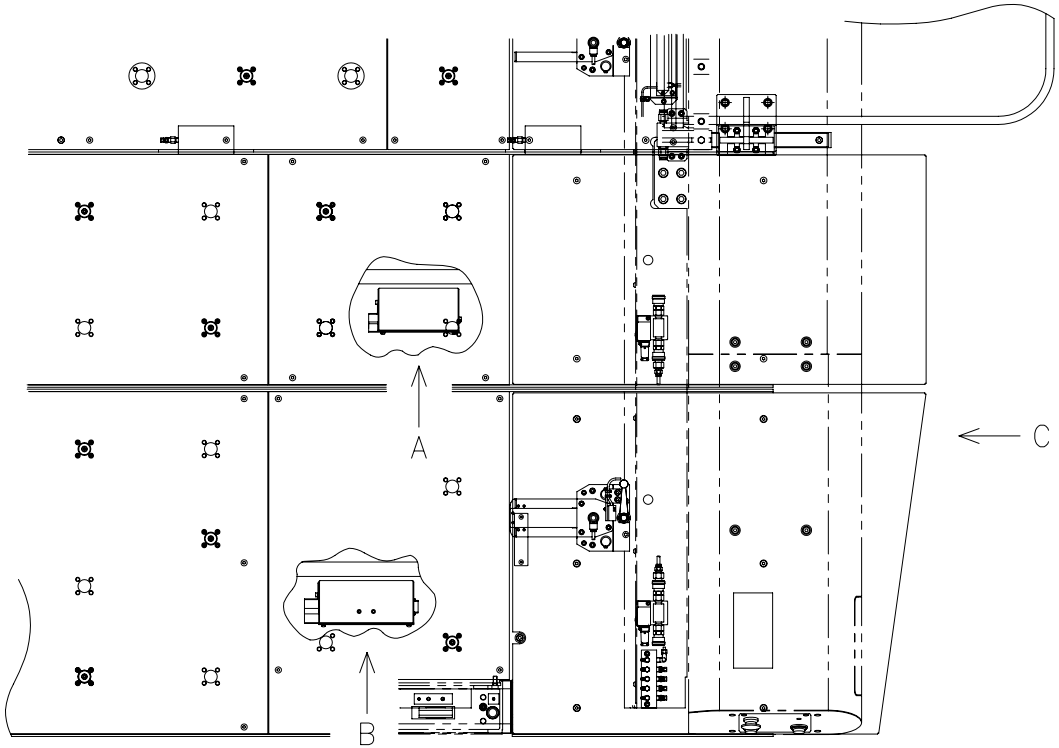

Front Side

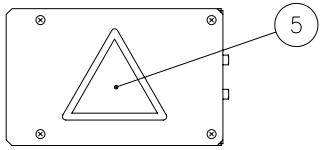

<FC Relay Box>
VIEW A

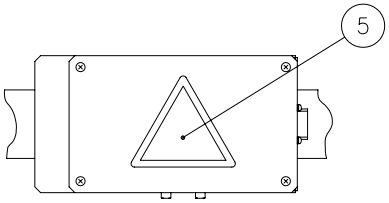

<F Relay Box>
VIEW B

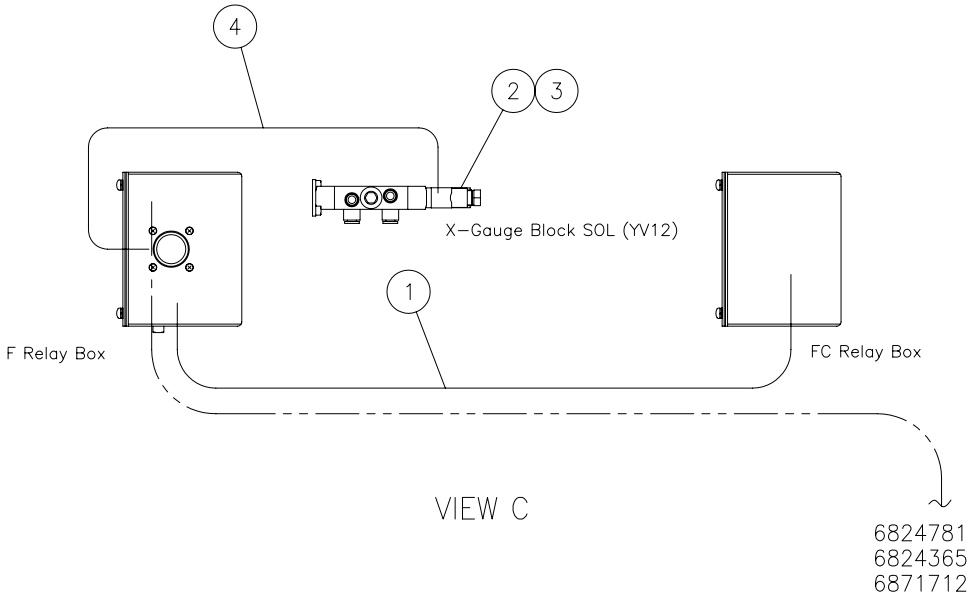

VIEW C

Unit No. 190

MP-C(8) From Serial No.36102001 and after

Index	Code	Parts Name	Drawing No.	Type	Maker	Q'ty	Note
1	74415554	Cable CH-1	6828051 B			1	
2	74569880	Solenoid Valve	7832809		SMC	1	
3	79572401	Hex Soc Cap Screw	P330200014	M4X8		2	
4	74575280	Cable Y-12 (1)	6827575			1	
5	74379098	Charging Mark	P360200003	JISB6015-80H		2	

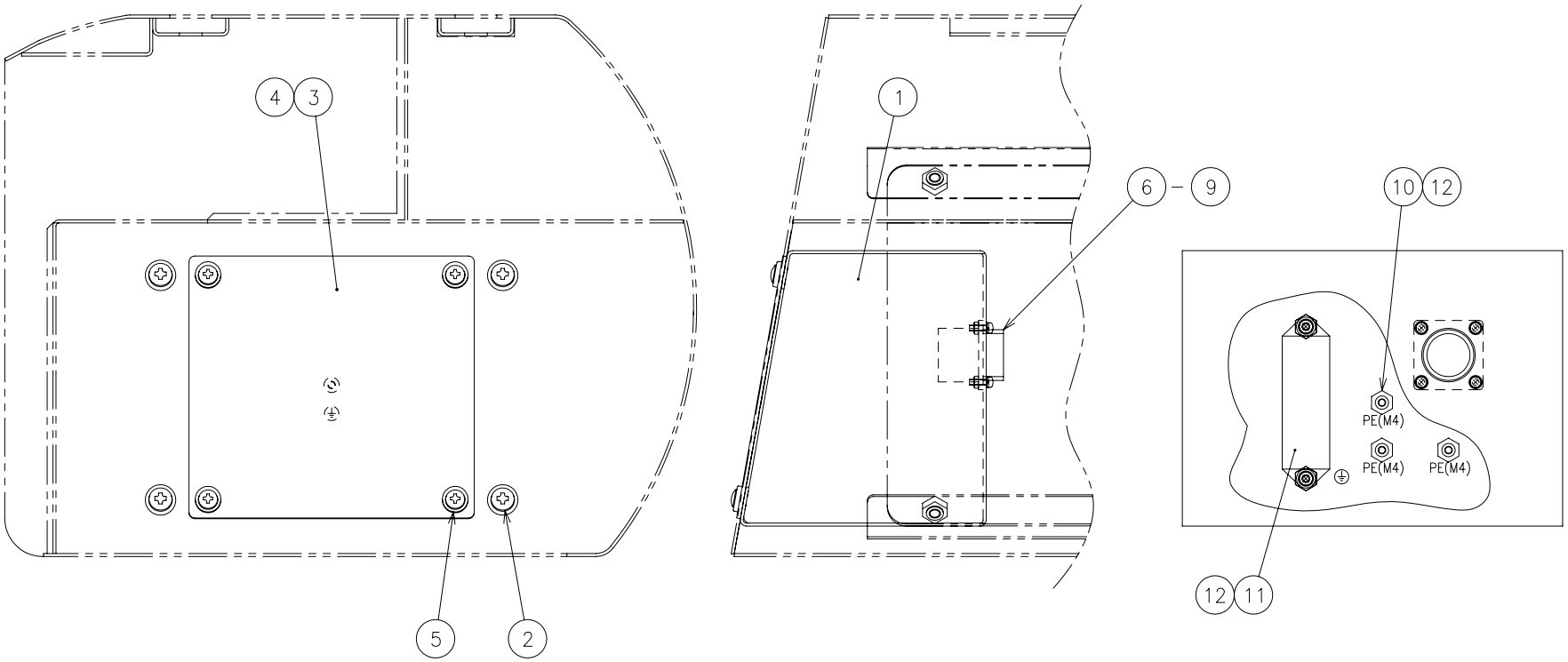

6877387
(6877515)

Unit No. 191

MP-C(9) From Serial No.36102001 and after

Index	Code	Parts Name	Drawing No.	Type	Maker	Q'ty	Note
1	74417273	CR Control Box	6874522 A			1	
2	74722795	Knob Bolt	P338048002	Faced Screw -NO.3-M6X15	Tokyo Byora	4	
3	74417274	CR Box Cover	6874527			1	
4	74417275	Packing	6874525			1	
5	74722794	Knob Bolt	P338048001	Faced Screw -NO.2-M5X10	Tokyo Byora	4	
6	74521705	Plastic R Connector	P862032003	206036-1	AMP	1	
7	74384510	Plug Type Terminal	P862142020	66400-1	AMP	9	
8	74570051	Pan Head Screw with Washer	P334200109	M3X10(Chromate P-4)		4	
9	74307616	Nut	P332000001	M3		4	
10	74569811	Pan Head Screw with Washer	P334200113	M4X6(Chromate P-4)		4	
11	74386506	Rectangle Connector	P862138056	KS6KRG/D6	WEIDMULLER	1	
12	86620301	Hex Soc Cap Screw	P330200018	M4X15		2	

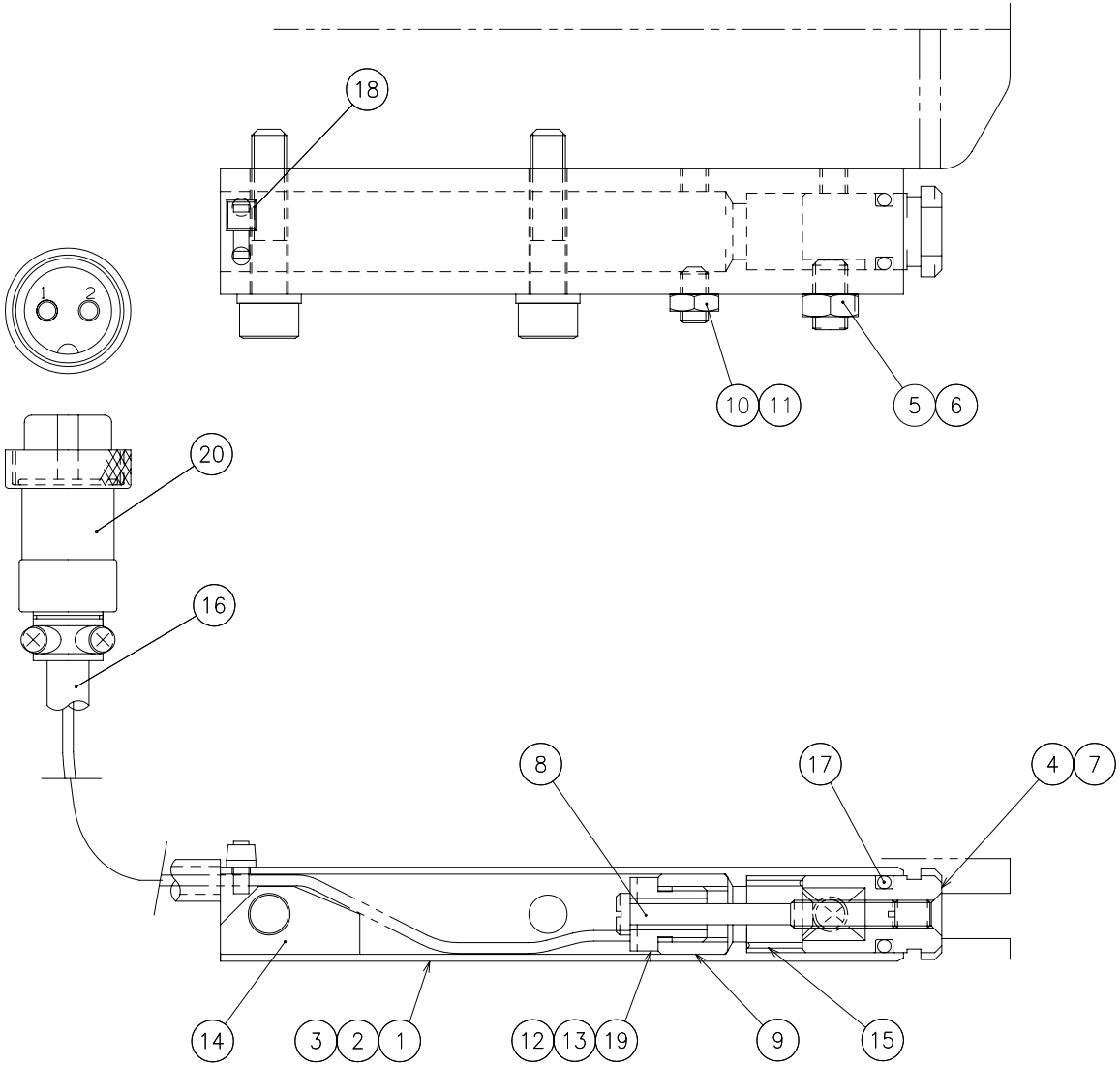

7420920E

Index	Code	Parts Name	Drawing No.	Type	Maker	Q'ty	Note
1	74573823	Sensor Holder	1542194 B			1	
2	79316111	Hex Soc Cap Screw	P330210010	M5X25		2	
3	79567114	Spring Washer	P336050004	5		2	
4	74569468	Stopper	7420921 A			1	
5	36147503	Socket Set Screw	P330550018	M5X10(Flat Type)		1	
6	78186244	Nut	P332000016	M5(Thin)		1	
7	71102223	Socket Set Screw	P330550008	M4X5(Flat Type)		1	
8	74569469	Screw	1542196 A			1	
9	74379829	Insulator	0849943			1	
10	74305502	Socket Set Screw	P330590052	M4X8(Cup-end)		1	
11	74716224	Nut	P332000015	M4(Thin)		1	
12	74573699	Screw	1542197 C			1	
13	74569471	Vinyl Cord (P.V.C)	P342208004	ME15EU13-1.5M	JUNKOSHA	1	
14	74569262	Packing	7420922			1	
15	74573867	Spring	7831012		FUTABA HATSUJO	1	
16	31182101	Plastic Hose	P230218010	UH30-06(Black)-1.1M	JUNKOSHA	1	
17	74569264	O Ring	P590000249	4D-P7		1	
18	74569473	Cable Band	P381058104	SKB-85MM	KITAGAWA	1	
19	74569474	Tube	P230348005	A-1.5X0.2(Black)	SEI	1	

From Serial No.36102001 and after

Index	Code	Parts Name	Drawing No.	Type	Maker	Q'ty	Note
20	74569254	Metallic Connector	P860038003	PLT-162-P	MISUMI	1	

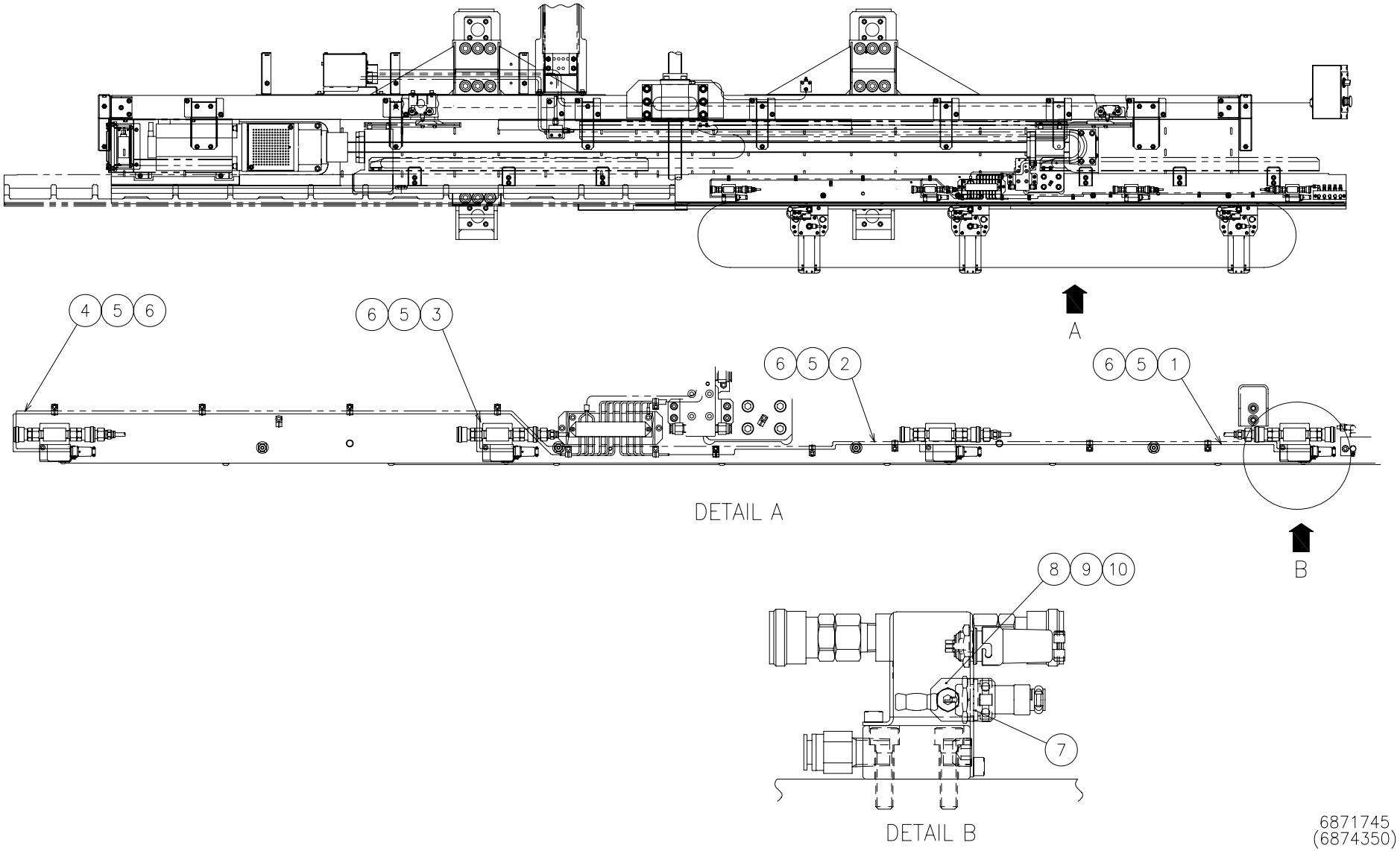
4 5 6
6 5 3
6 5 2
6 5 1
A
B
DETAIL A
8 9 10
7
DETAIL B
6871745
(6874350)

Index	Code	Parts Name	Drawing No.	Type	Maker	Q'ty	Note
1	74575170	Cabtire Cable	P342301945	VCTF0.5X2X800		1	
2	74575154	Cabtire Cable	P342301946	VCTF0.5X2X1400		1	
3	74416444	Cabtire Cable	P342301947	VCTF0.5X2X400		1	
4	74416445	Cabtire Cable	P342301948	VCTF0.5X2X1200		1	
5	75419408	Marker Tube	P869220208	0.5		8	
6	74310420	Cable Band	P381058020	CV-175N	SHIBAKEI	10	
7	74164041	Metallic Connector	P860038004	PLT-162-R	MISUMI	4	
8	74569256	Loose Stopper Plate	7420749			4	
9	36501002	Hex Soc Cap Screw	P330210002	M5X8		4	
10	74307821	Cable Band	P381058012	CV-150N	SHIBAKEI	4	

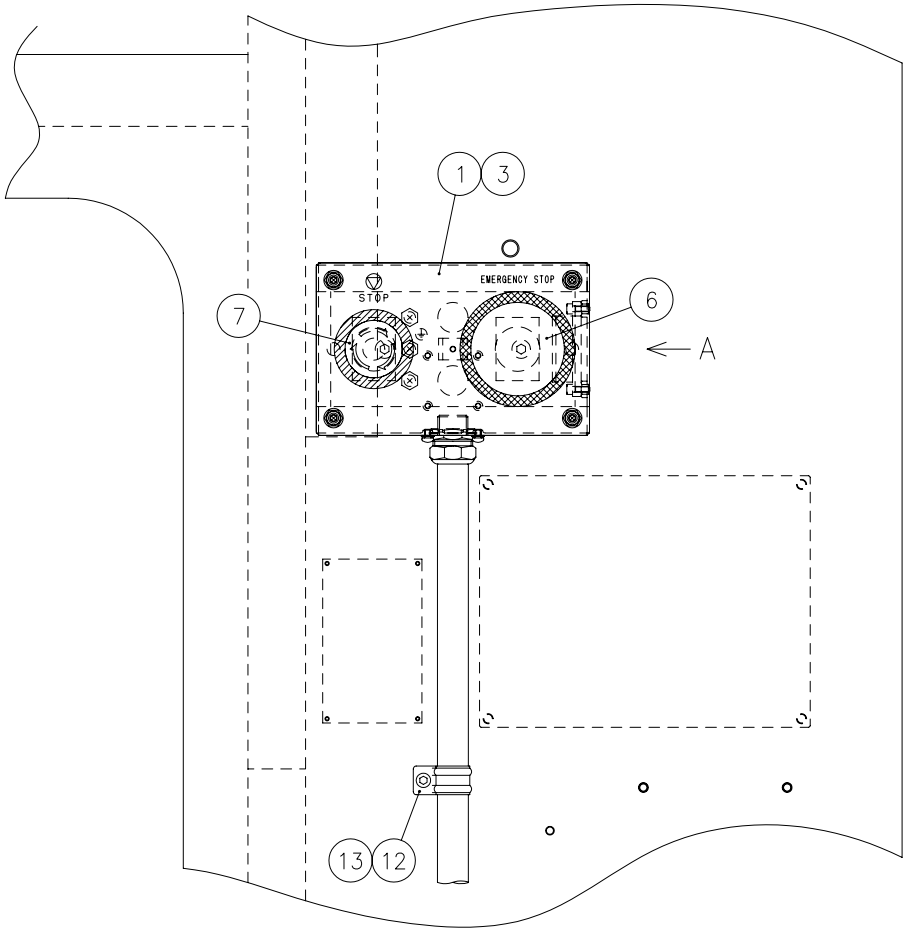

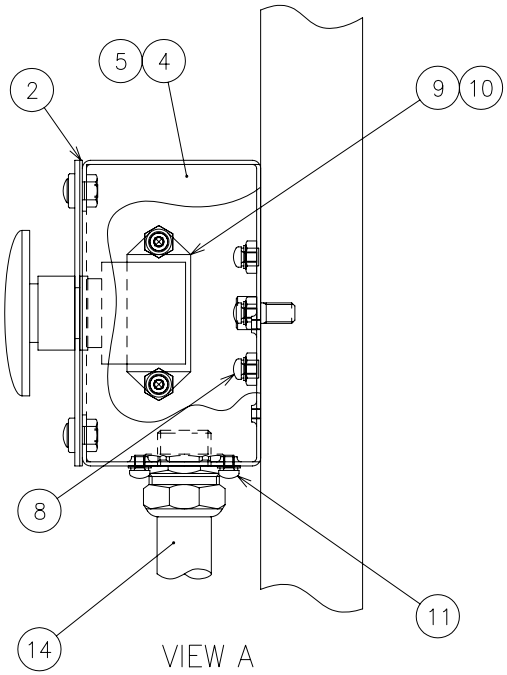

6870510
6879488

Index	Code	Parts Name	Drawing No.	Type	Maker	Q'ty	Note
1	74416446	Legend Plate(SW.Operating)(B)	6870517			1	for EU,EXP
1	74419465	Legend Plate(SW.Operating)(B)	6817593			1	Chinese
2	74416468	Packing	6824981			1	
3	74722794	Knob Bolt	P338048001	Faced Screw -NO.2-M5X10	Tokyo Byora	4	
4	74416474	Switch Operating Box L	6870518			1	
5	79565423	Hex Soc Cap Screw	P330230004	M8X15		2	
6	74570048	Push Switch	P821124129	AR30V1R-02R-Z037	FUJI Electric	1	
7	74568712	Push Switch	P821124128	AR30V3R-01BZ235	FUJI Electric	1	
8	74569811	Pan Head Screw with Washer	P334200113	M4X6(Chromate P-4)		4	(Ground)
9	74386516	Rectangle Connector	P862138054	KS4KRG/D4	WEIDMULLER	1	
10	86611902	Hex Soc Cap Screw	P330200016	M4X12		2	
11	74569811	Pan Head Screw with Washer	P334200113	M4X6(Chromate P-4)		4	
12	74732128	Saddle For Conduct	P381017093	CH-15(D6.2)	DAIWA DENGYO	1	
13	79564305	Hex Soc Cap Screw	P330220006	M6X15		1	
14	74419182	Cable L	6878339			1	

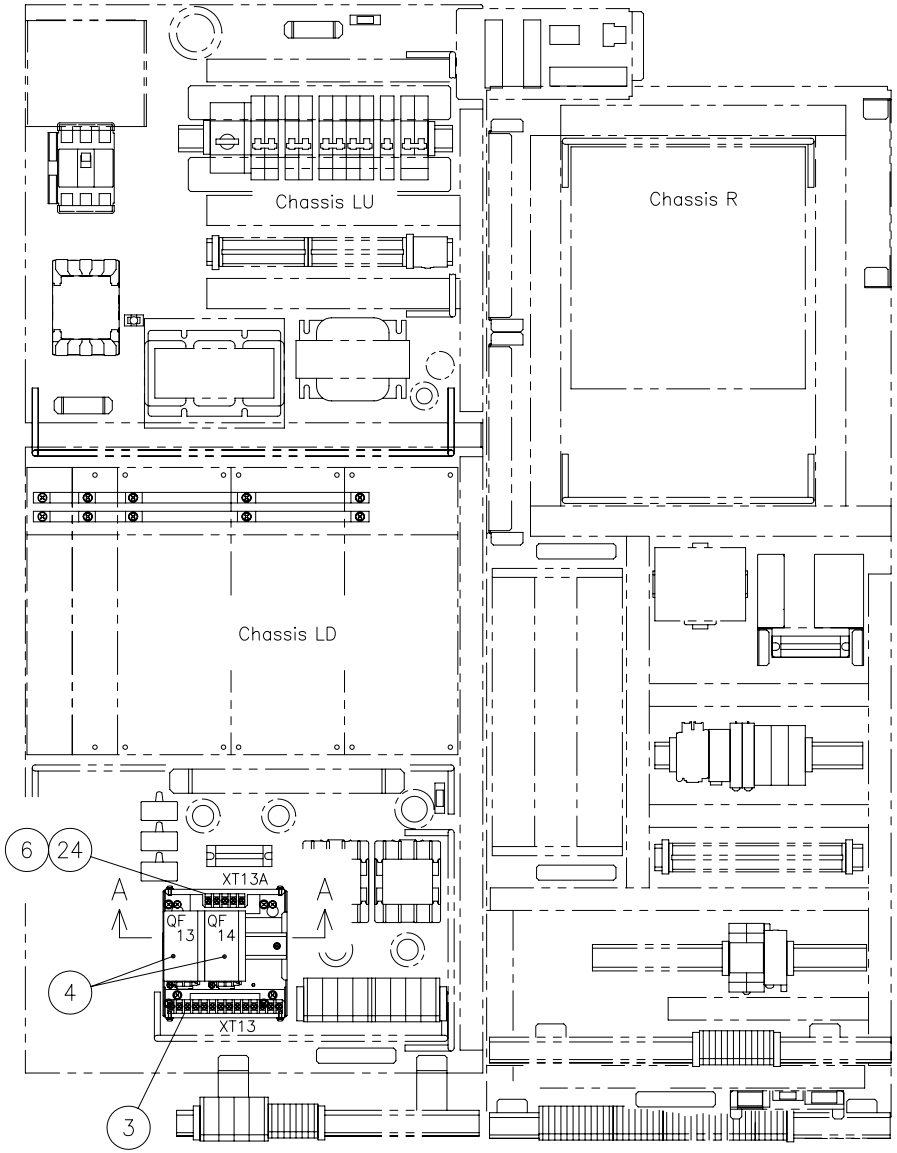

Control Panel

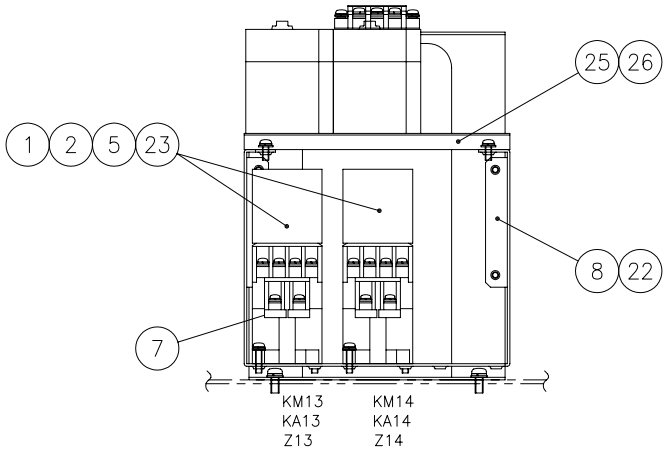

SECTION A–A

6701376#1

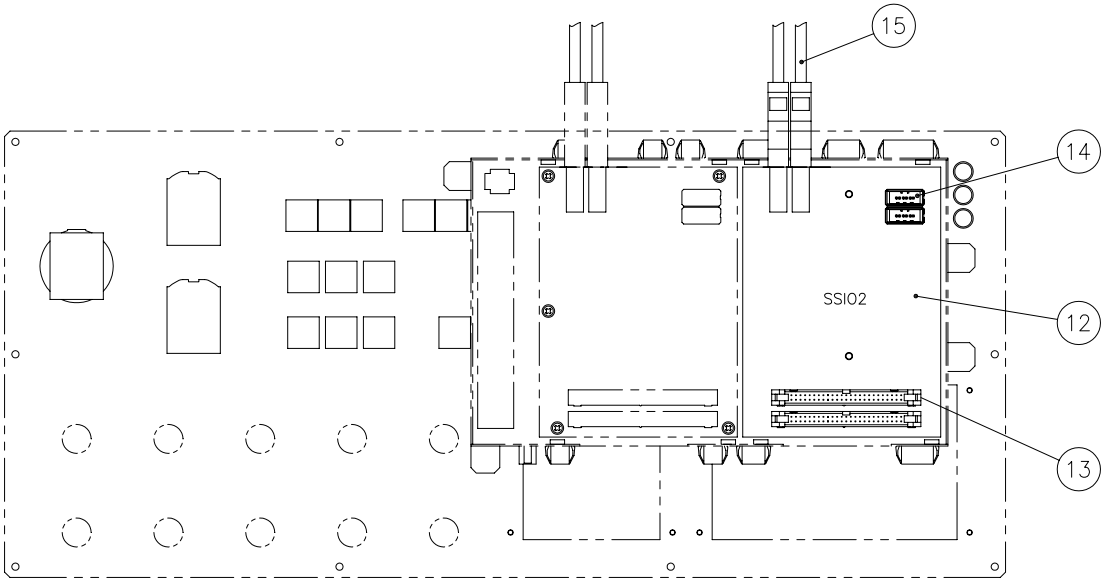

Back View

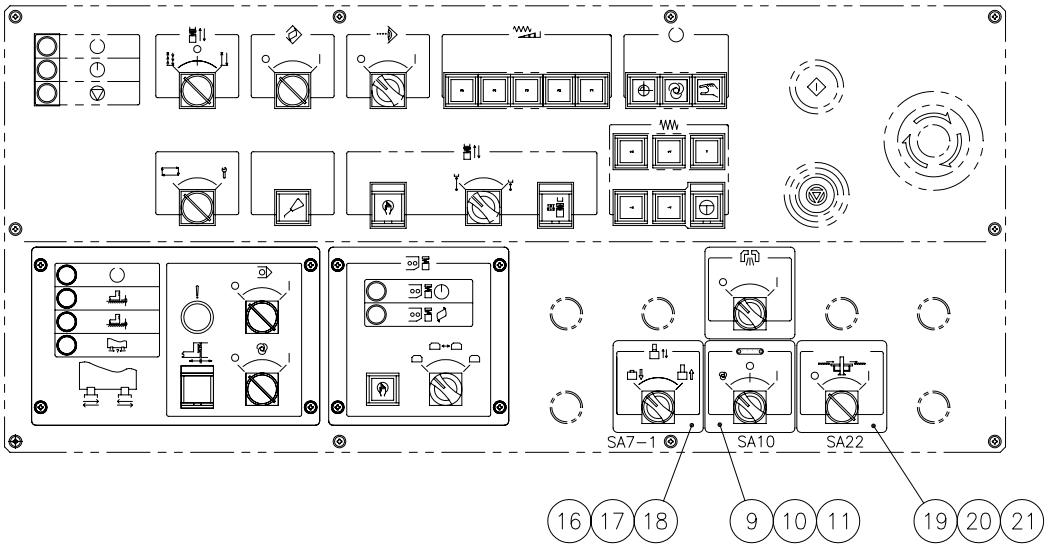

NC Operation Panel

6705385#3A

Index	Code	Parts Name	Drawing No.	Type	Maker	Q'ty	Note
1	74417799	Accessory(Electro-Magnetic SW)	P810184012	SZ-ZM1	FUJI Electric	2	Z13,14
2	45253279	Coil Driving Relay	P810184009	SZ-CD1	FUJI Electric	2	KA13,14
3	74416365	Block Terminal	P864008065	OGM-300NE-B-12P-C-M4	OSADA	1	XT13
4	71513742	Low Voltage Breaker	P812048027	PKZM0-2.5+NHI11	MURA Electric	2	QF13,14
5	74572132	Electro-Magnetic Contactor	P810004046	SC-03/T-AC100V	FUJI Electric	2	KM13,14
6	74419088	Block Terminal	P864008265	OGM-300-M-3P-C-M4	OSADA	1	XT13A
7	74419089	WP130	670285330			1	
8	74416362	OP Chassis 1 (EMFE)	6705415			1	
9	74416370	Scrap Conveyor Panel (CE)	6705295			1	
10	74416372	Key Select Switch	P820004089	AH165-SPK3B22	FUJI Electric	1	SA10
11	74417792	Cable (SS19)	670617214A			1	
12	71369424	Accessory (Program Controller)	P767485288	A20B-2002-0521	FANUC	1	SSIO2
13	74419466	Cable (C72)	670526003A			1	
14	74572012	Cable (SS11)	670246008			1	
15	74572014	Cable (WC1)	670246010			1	
16	74572036	Key Select Switch	P820004029	AH165-SP2B11	FUJI Electric	1	SA7-1
17	74417793	Locating Pin Panel	6705296			1	
18	74417795	Cable (SS16)	670617211A			1	
19	74577659	Key Select Switch	P820014159	AH165-SJ2B11A	FUJI Electric	1	SA22

From Serial No.36102001 and after

Index	Code	Parts Name	Drawing No.	Type	Maker	Q'ty	Note
20	74419090	MP Operation Panel	6705980			1	
21	74417788	Cable (SS18)	670617213A			1	
22	74577525	Pan Head Screw with Washer	P334200183	M4X10(Chromate P-3)		8	
23	74417689	Pan Head Screw with Washer	P334200176	M4X16(Chromate P-4)		4	
24	74417689	Pan Head Screw with Washer	P334200176	M4X16(Chromate P-4)		2	
25	74419467	Terminal Base		DAV4(L=162.5)	TOYO GIKEN	1	
26	74577525	Pan Head Screw with Washer	P334200183	M4X10(Chromate P-3)		2	
27	74416373	Profibus Master Board	P767485514	A02B-0281-J315	FANUC	1	List Only

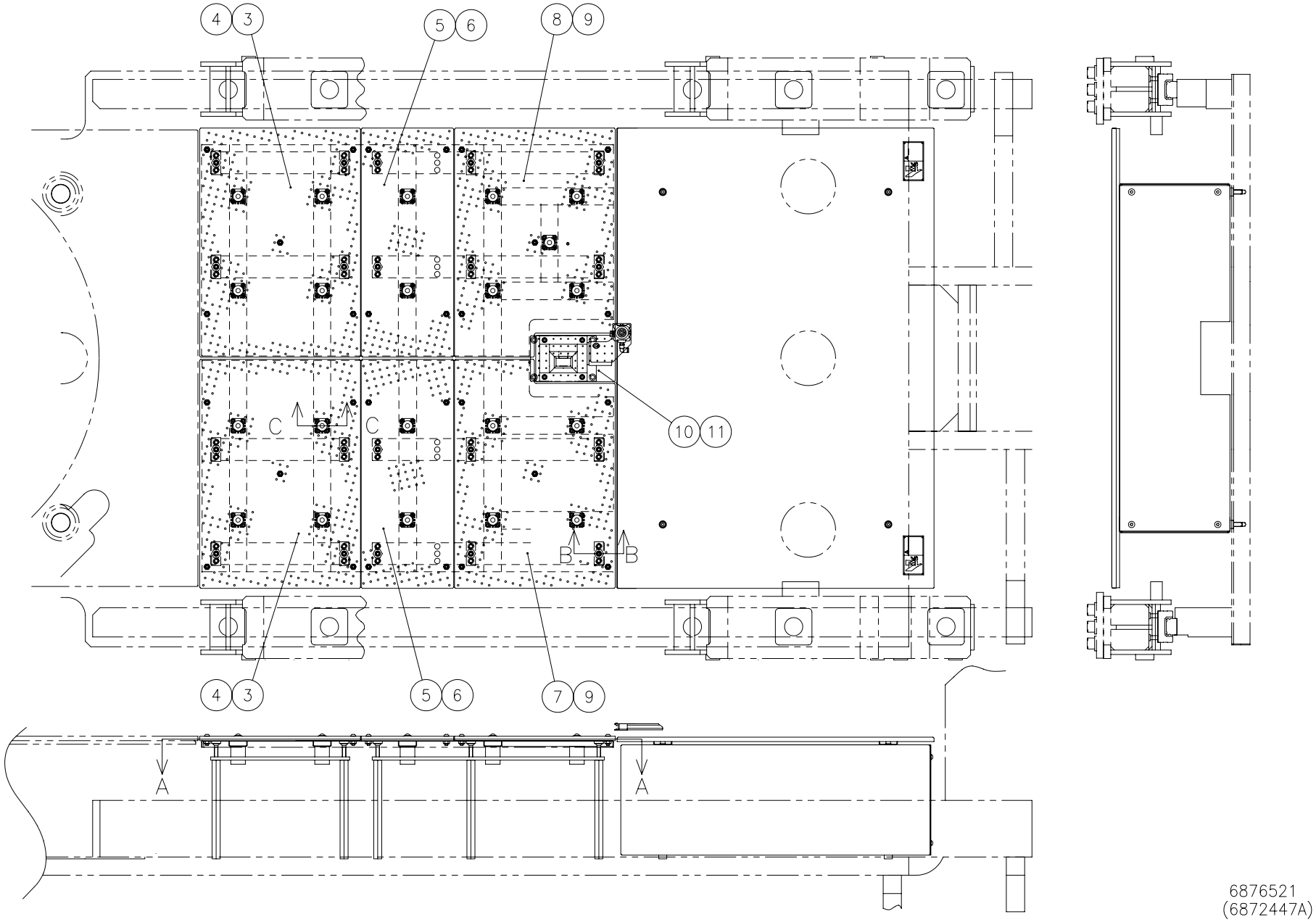
4
3
5
6
8
9
10
11
C
C
B
B
7
A
A
6876521
(6872447A)

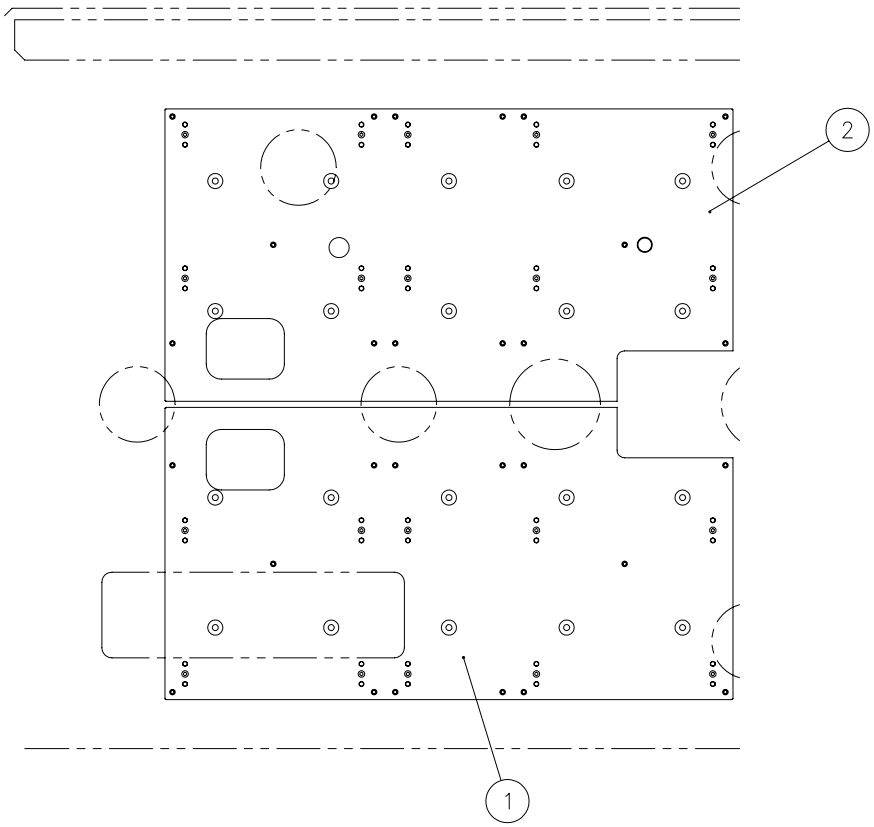

SECTION A–A

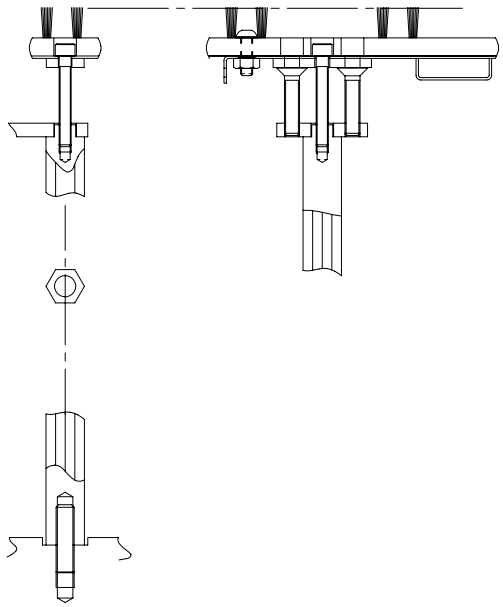

SECTION B–B

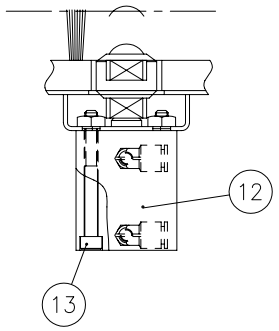

SECTION C–C
(20 Sets)

6876521
(6872447A)

Index	Code	Parts Name	Drawing No.	Type	Maker	Q'ty	Note
1	74419174	Center Brush Base (F)	6872501			1	
2	74419175	Center Brush Base (R)	6872502			1	
3	74417278	MDF Brush (C)	6873276 A			2	3.2mm
3	74419176	MDF Brush (C)	6878316			2	4.5mm
4	74722756	Button Head Screw	P334500021	M8X25		10	
5	74419119	MDF Brush (C6)	6872503			2	3.2mm
5	74419177	MDF Brush (C6)	6878317			2	4.5mm
6	74722756	Button Head Screw	P334500021	M8X25		8	
7	74417276	MDF Brush (CF)	6871321 A			1	
8	74417277	MDF Brush (CR)	6871322 A			1	
9	74722756	Button Head Screw	P334500021	M8X25		10	
10	74417279	Locating Pin Cover	6871323			1	
11	74183316	Button Head Screw	P334500020	M8X20		4	
12	74568610	Cylinder	7832804 A	SSD-L-25-15-T5V5-H	CKD	1	
13	74706157	Hex Soc Cap Screw	P330210015	M5X50		4	

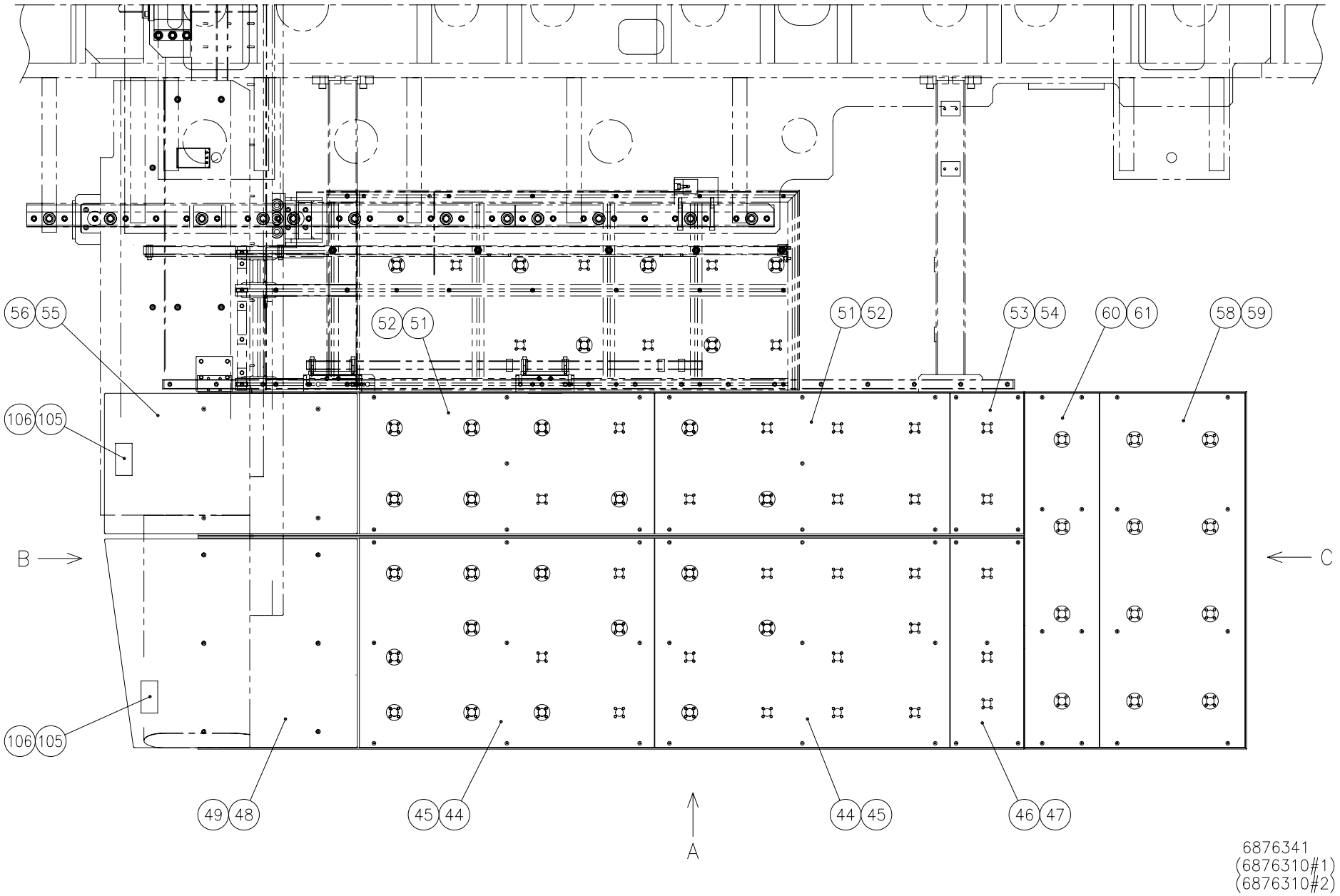
56 55
106 105
52 51
51 52
53 54
60 61
58 59
B
C
106 105
49 48
45 44
44 45
46 47
A
6876341
(6876310#1)
(6876310#2)

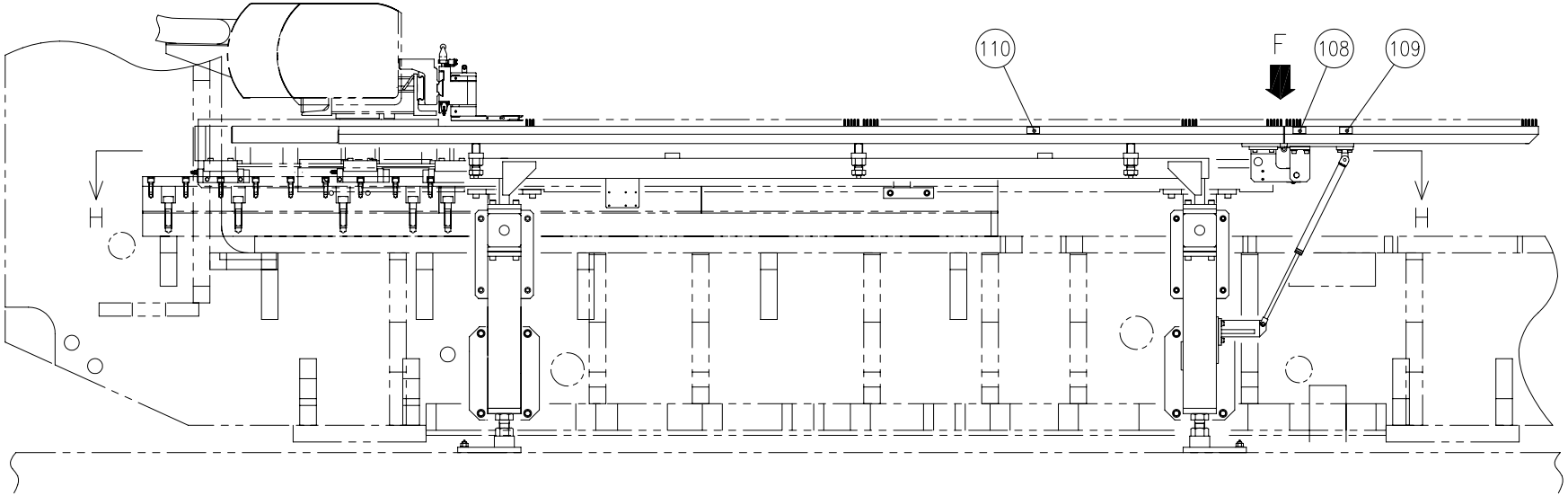

VIEW A

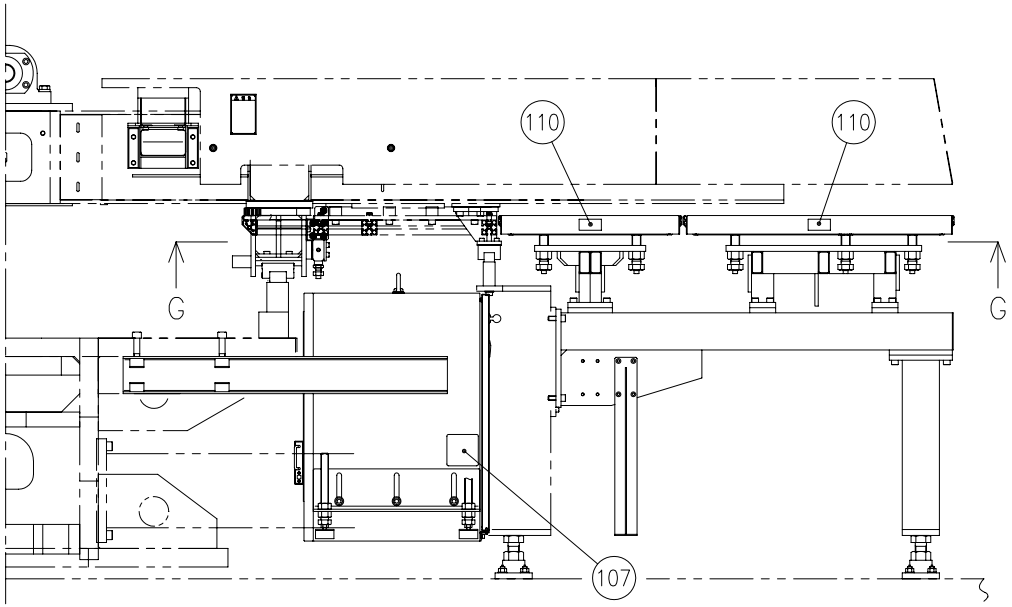

VIEW B

6876341
(6876310#1)
(6876310#2)

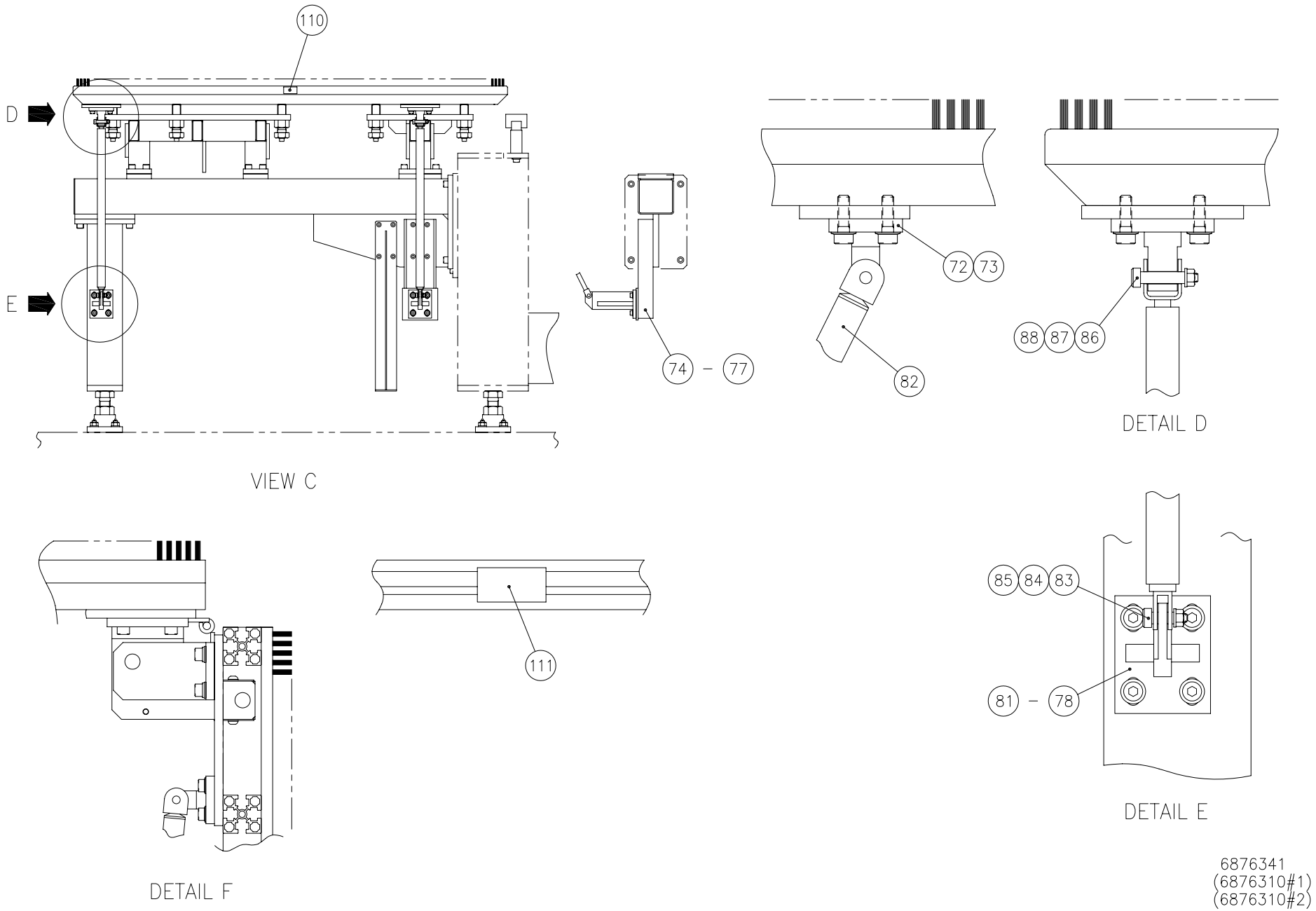
110
D
E
VIEW C
74 – 77
72 73
82
88 87 86
DETAIL D
111
DETAIL F
85 84 83
81 – 78
DETAIL E
6876341
(6876310#1)
(6876310#2)

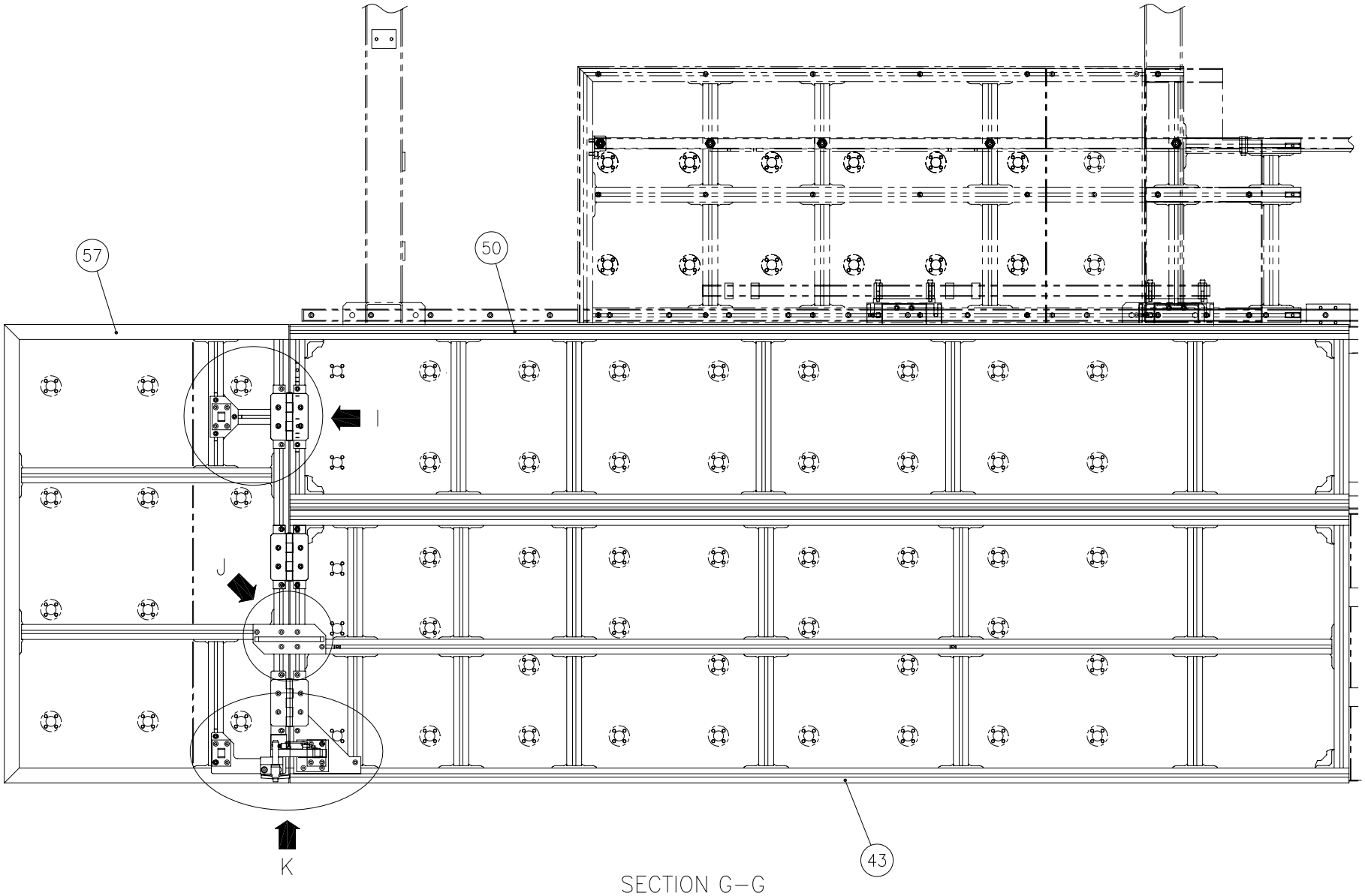

6876341
(6876310#1)
(6876310#2)

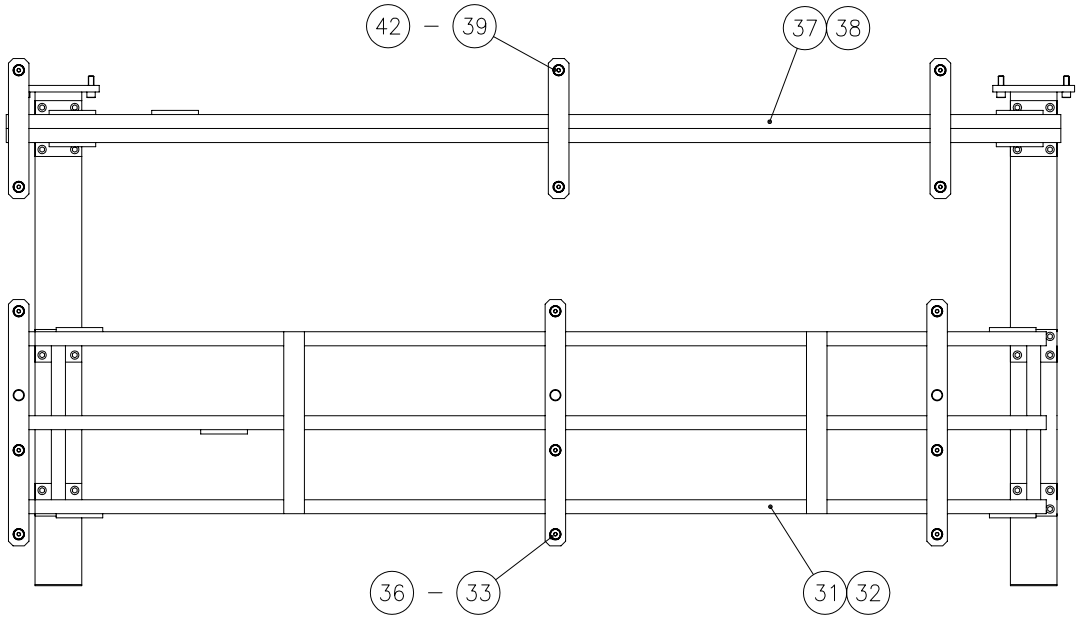

SECTION H–H

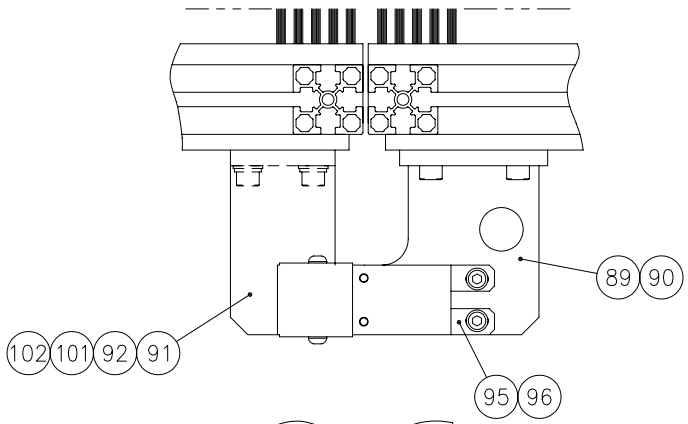

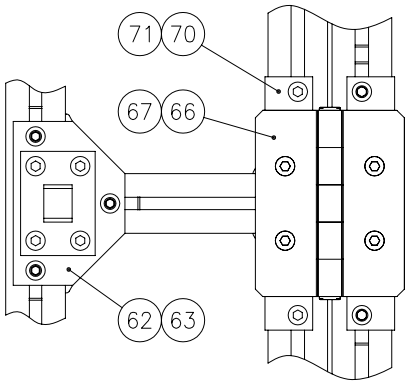

DETAIL I

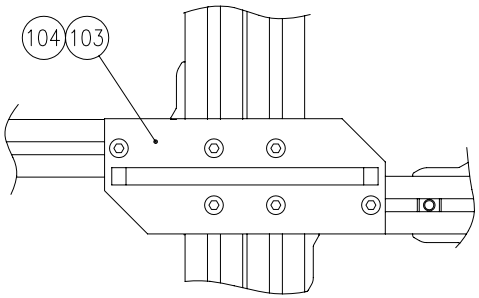

DETAIL J

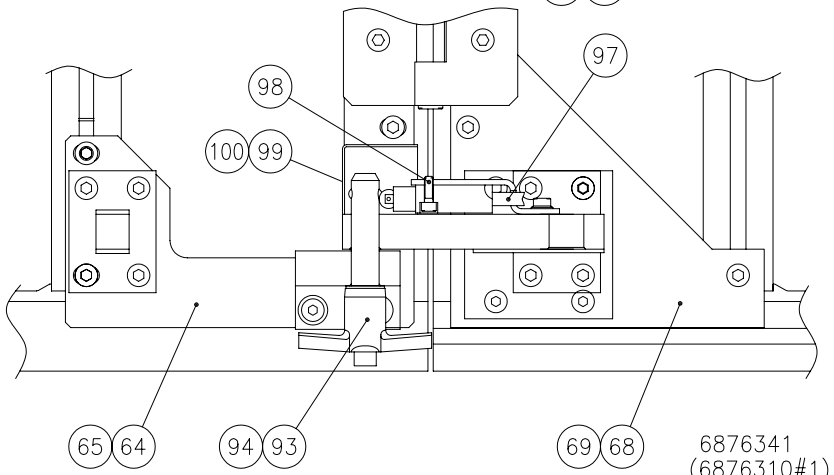

6876341
(6876310#1)
(6876310#2)

DETAIL K

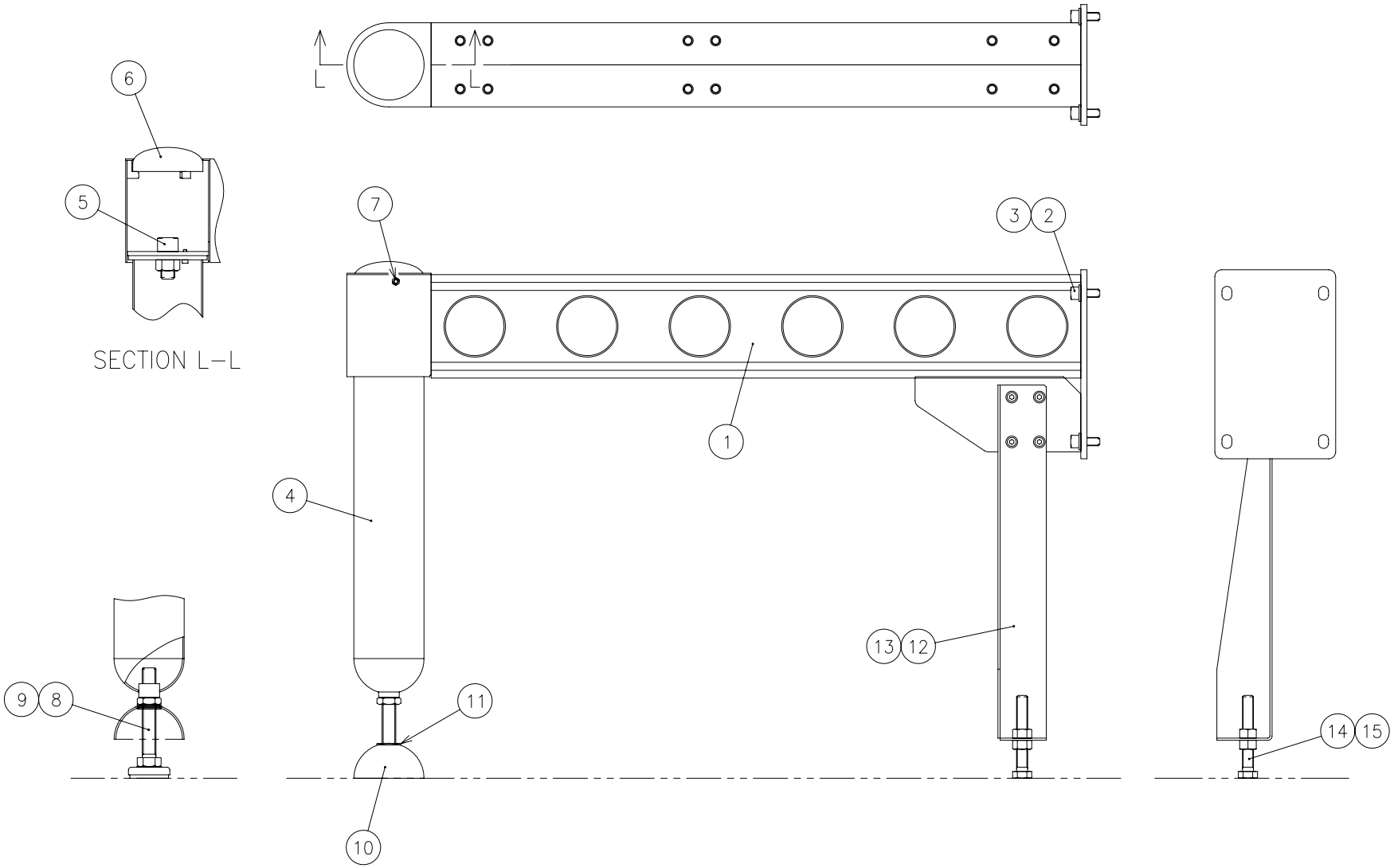

6879685

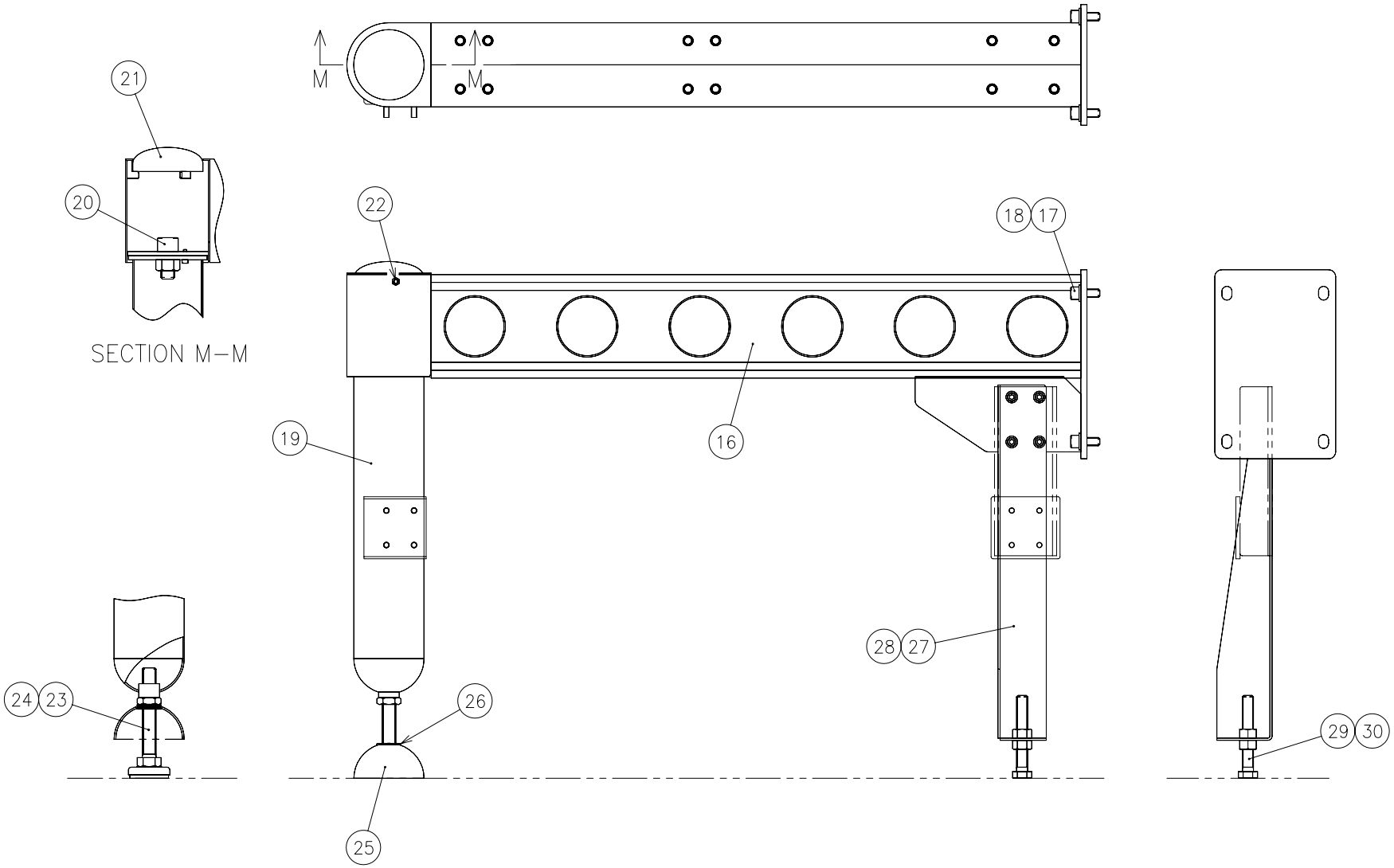

6879662

From Serial No.36102001 and after

Index	Code	Parts Name	Drawing No.	Type	Maker	Q'ty	Note
1	74419472	Side Table Base (R)	380787100A			1	
2	36367655	Hex Soc Cap Screw	P330250005	M12X30		4	
3	86613931	Washer	P336000008	12(Regular Round)		4	
4	74419473	Stand	6879686			1	
5	36320521	Hex Soc Cap Screw	P330270003	M20X40		1	
6	74419474	Cap	6879678			1	
7	86620204	Socket Set Screw	P330590019	M6X10(Cup-end)		1	
8	74570064	Level Adjuster	P384022021	KC-280-0	TAKIGEN	1	
9	10380040	Nut	P332000023	M20(Thin)		1	
10	74419475	Level Adjuster Cover	3807879			1	
11	31100028	Bush For Cable	P229112053	C-30-NG-79-Q	TAKIGEN	1	
12	74419476	Shipping Bracket	3807874 A			1	
13	75420815	Flange Socket Bolt	P330468001	M8X20	NISSAN NEJI	4	
14	36163072	Bolt	P330060076	M16X120(All-thread)		1	
15	86611630	Nut	P332000066	M16(Type-1)		1	
16	74419472	Side Table Base (R)	380787100A			1	
17	36367655	Hex Soc Cap Screw	P330250005	M12X30		4	
18	86613931	Washer	P336000008	12(Regular Round)		4	
19	74419484	Stand (RT)	6879680			1	

Index	Code	Parts Name	Drawing No.	Type	Maker	Q'ty	Note
20	36320521	Hex Soc Cap Screw	P330270003	M20X40		1	
21	74419474	Cap	6879678			1	
22	86620204	Socket Set Screw	P330590019	M6X10(Cup-end)		1	
23	74570064	Level Adjuster	P384022021	KC-280-0	TAKIGEN	1	
24	10380040	Nut	P332000023	M20(Thin)		1	
25	74419475	Level Adjuster Cover	3807879			1	
26	31100028	Bush For Cable	P229112053	C-30-NG-79-Q	TAKIGEN	1	
27	74419476	Shipping Bracket	3807874 A			1	
28	75420815	Flange Socket Bolt	P330468001	M8X20	NISSAN NEJI	4	
29	36163072	Bolt	P330060076	M16X120(All-thread)		1	
30	86611630	Nut	P332000066	M16(Type-1)		1	
31	74418401	Side Table Frame (1)	6872490			1	
32	36110743	Hex Soc Cap Screw	P330250006	M12X35		16	
33	74569742	Jack Screw	6821834			9	
34	71371592	Nut	P332000011	M24		9	
35	79316161	Hex Soc Cap Screw	P330230024	M8X110		9	
36	79567109	Washer	P336000006	8(Regular Round)		9	
37	74418402	Side Table Frame (2)	6872491			1	
38	36110743	Hex Soc Cap Screw	P330250006	M12X35		8	

Index	Code	Parts Name	Drawing No.	Type	Maker	Q'ty	Note
39	74569742	Jack Screw	6821834			6	
40	71371592	Nut	P332000011	M24		6	
41	79316161	Hex Soc Cap Screw	P330230024	M8X110		6	
42	79567109	Washer	P336000006	8(Regular Round)		6	
43	74419485	Fixed Table (R) A	7830943 B		NIC	1	
44	74571312	MDF Brush (K-4)	6823663 A			2	
45	74722756	Button Head Screw	P334500021	M8X25		18	
46	74418404	MDF Brush (K-9)	6872492			1	
47	74722756	Button Head Screw	P334500021	M8X25		5	
48	74415470	Cover Table (R-1)	6823014 A			1	
49	79565423	Hex Soc Cap Screw	P330230004	M8X15		6	
50	74418405	Fixed Table (R) B	7830944		NIC	1	
51	74415176	MDF Brush (K-1)	6823635			2	3.2mm
51	74575212	MDF Brush (K-1)	6823846			2	4.5mm
52	74722756	Button Head Screw	P334500021	M8X25		14	
53	74418406	MDF Brush (K-10)	6872493			1	3.2mm
53	74418407	MDF Brush (K-10)	6878329			1	4.5mm
54	74722756	Button Head Screw	P334500021	M8X25		4	
55	74415449	Cover Table (F-2)	6823844 A			1	

Index	Code	Parts Name	Drawing No.	Type	Maker	Q'ty	Note
56	79565423	Hex Soc Cap Screw	P330230004	M8X15		4	
57	74418408	Open And Shut Table	7830946		NIC	1	
58	74571313	MDF Brush (K-7)	6823664 A			1	
59	74722756	Button Head Screw	P334500021	M8X25		8	
60	74418409	MDF Brush (K-11)	6872494 A			1	
61	74722756	Button Head Screw	P334500021	M8X25		8	
62	74569784	Gas Spring Plate	6821854			1	
63	79564804	Hex Soc Cap Screw	P330230006	M8X20		3	
64	74571320	Hinge Plate (1)	6823674 A			1	
65	79564804	Hex Soc Cap Screw	P330230006	M8X20		3	
66	74383136	Hinge Add.Works	6579383	B-1001-2		3	
67	86612728	Hex Soc Cap Screw	P330230002	M8X12		12	
68	74569786	Hinge Plate (2)	6821856			1	
69	79564804	Hex Soc Cap Screw	P330230006	M8X20		3	
70	74569787	Hinge Plate (3)	6821857			4	
71	79564804	Hex Soc Cap Screw	P330230006	M8X20		8	
72	74575218	Gas Spring Bracket (2)	6822978 A			2	
73	75420636	Flange Socket Bolt	P330468003	M8X25	NISSAN NEJI	8	
74	74419486	Gas Spring Bracket (3)	6879679			1	

Index	Code	Parts Name	Drawing No.	Type	Maker	Q'ty	Note
75	73114706	Flange Socket Bolt	P330468002	M8X30	NISSAN NEJI	4	
76	74300504	Nut	P332000005	M8		4	
77	79567109	Washer	P336000006	8(Regular Round)		4	
78	74575220	Gas Spring Bracket (1)	6823003			2	
79	75420636	Flange Socket Bolt	P330468003	M8X25	NISSAN NEJI	4	
80	74300504	Nut	P332000005	M8		4	
81	79567109	Washer	P336000006	8(Regular Round)		4	
82	74387138	Gas Spring	P317555029	50UX0	TAKACHIHO	2	
83	74560042	Shoulder Bolt	P338134013	MSB8-15	MISUMI	2	
84	79565419	Washer	P336000005	6(Regular Round)		2	
85	44274544	Nut	P332000004	M6		2	
86	74379250	Shoulder Bolt	P338134019	MSB8-30	MISUMI	2	
87	79565419	Washer	P336000005	6(Regular Round)		2	
88	44274544	Nut	P332000004	M6		2	
89	74415472	Pin Bracket	6870270			1	
90	79566121	Hex Soc Cap Screw	P330230007	M8X25		4	
91	74415473	Pin Bracket (2)	6822980 B			1	
92	79566121	Hex Soc Cap Screw	P330230007	M8X25		2	
93	74569793	Locating Pin	P337108002	BJ773-16050	IMAO Mfg	1	

Index	Code	Parts Name	Drawing No.	Type	Maker	Q'ty	Note
94	79573416	Hex Soc Cap Screw	P330210003	M5X10		1	
95	74415474	LS Bracket	6822981 D			1	
96	45252001	Flange Socket Bolt	P330460003	M6X15		2	
97	74415962	Cable S-18 (1)	6820258 B			1	
98	79316109	Hex Soc Cap Screw	P330210006	M5X15		2	
99	74415475	LS Cover	6870271			1	
100	36379029	Button Head Screw	P334500013	M6X10		2	
101	79567109	Washer	P336000006	8(Regular Round)		2	
102	86610326	Spring Washer	P336050006	8		2	
103	74569796	Shipping Bracket	6821858			1	
104	79564804	Hex Soc Cap Screw	P330230006	M8X20		6	
105	71362136	Legend Plate (Warning)(3)	6045924			2	English
105	71362135	Legend Plate (Warning)(3) FRA	6045078			2	French
105	71362137	Legend Plate (Warning)(3) GER	6046718			2	German
105	71362138	Legend Plate (Warning)(3) ITA	6046728			2	Italian
105	74415924	Legend Plate (Warning)(3)	6816795			2	Chinese
106	74326603	Blind Rivet	P339208001	NTA3-2	LOBTEX	8	
107	74419480	Legend Plate (Caution) E	3809322	(DO NOT LIFT HERE)		2	English
107	74419481	Legend Plate (Caution) F	3809323			2	French

Index	Code	Parts Name	Drawing No.	Type	Maker	Q'ty	Note
107	74419479	Legend Plate (Caution) G	3809321			2	German
107	74419482	Legend Plate (Caution) I	3809324			2	Italian
107	74419478	Legend Plate (Caution) C	3809319			2	Chinese
108	74415366	Legend Plate (OPEN) B (ENG)	6870230			1	English
108	74415368	Legend Plate (OPEN) B (FRA)	6870231			1	French
108	74415367	Legend Plate (OPEN) B (GER)	6870229			1	German
108	74415365	Legend Plate (OPEN) B (ITA)	6870232			1	Italian
108	74419487	Legend Plate (OPEN) B	6817542			1	Chinese
109	74415370	Legend Plate (Caution)ENG.	6870239			1	English
109	74415372	Legend Plate (Caution)FRA.	6870240			1	French
109	74415371	Legend Plate (Caution)GER.	6870238			1	German
109	74415369	Legend Plate (Caution)ITA.	6870241			1	Italian
109	74419488	Legend Plate (Caution)	6817524			1	Chinese
110	71130447	Legend Plate (Do Not Get On)	0840546			4	
111	74417425	Legend Plate (Warning)	6828694			2	
112	74419483	Adhesive Tape	P379108025	FE-6061 (20mm)	FANTAC	5	1M (List Only)

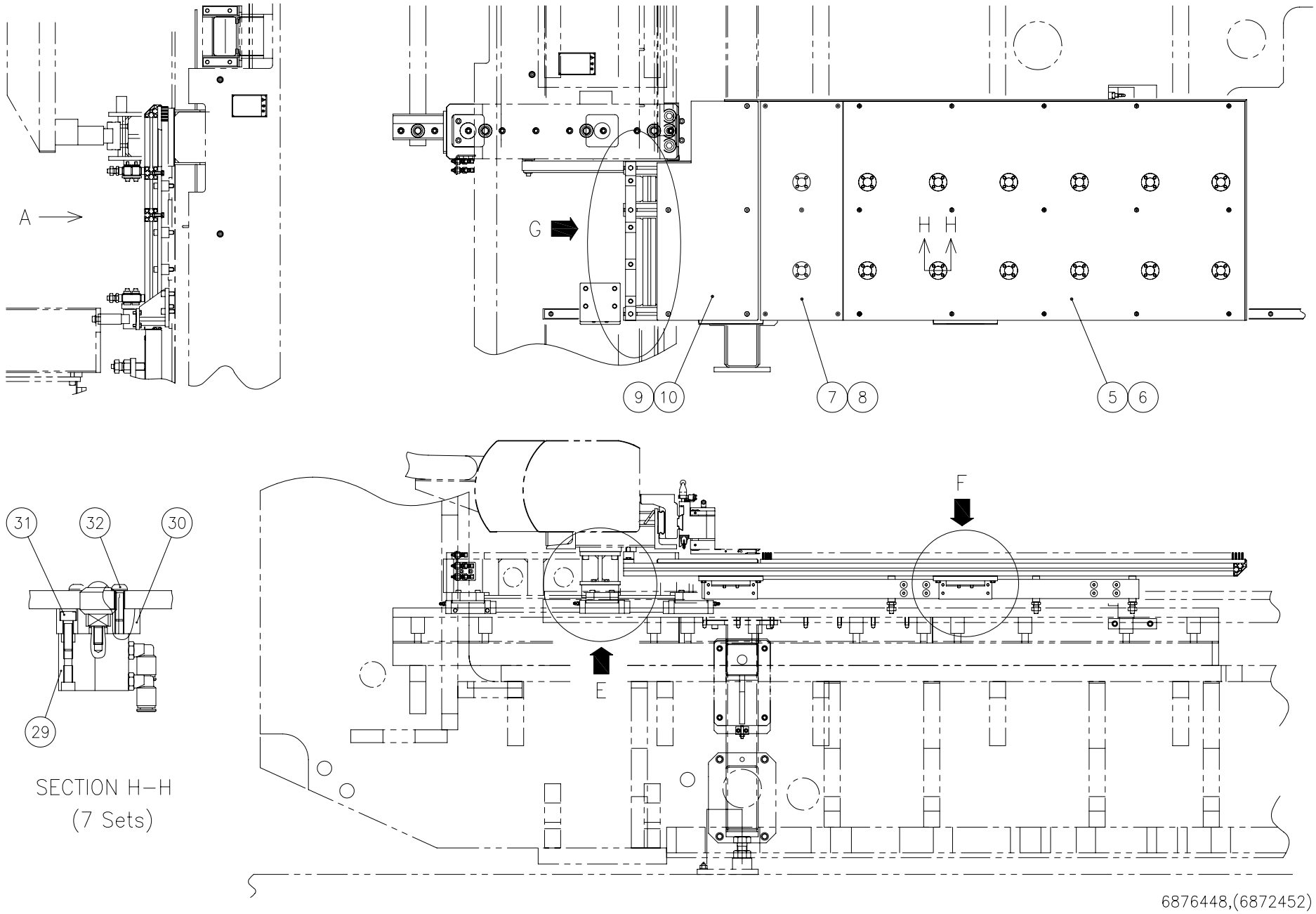
A
G
H H
9
10
7
8
5
6
31
32
30
29
SECTION H–H
(7 Sets)
F
E
6876448,(6872452)

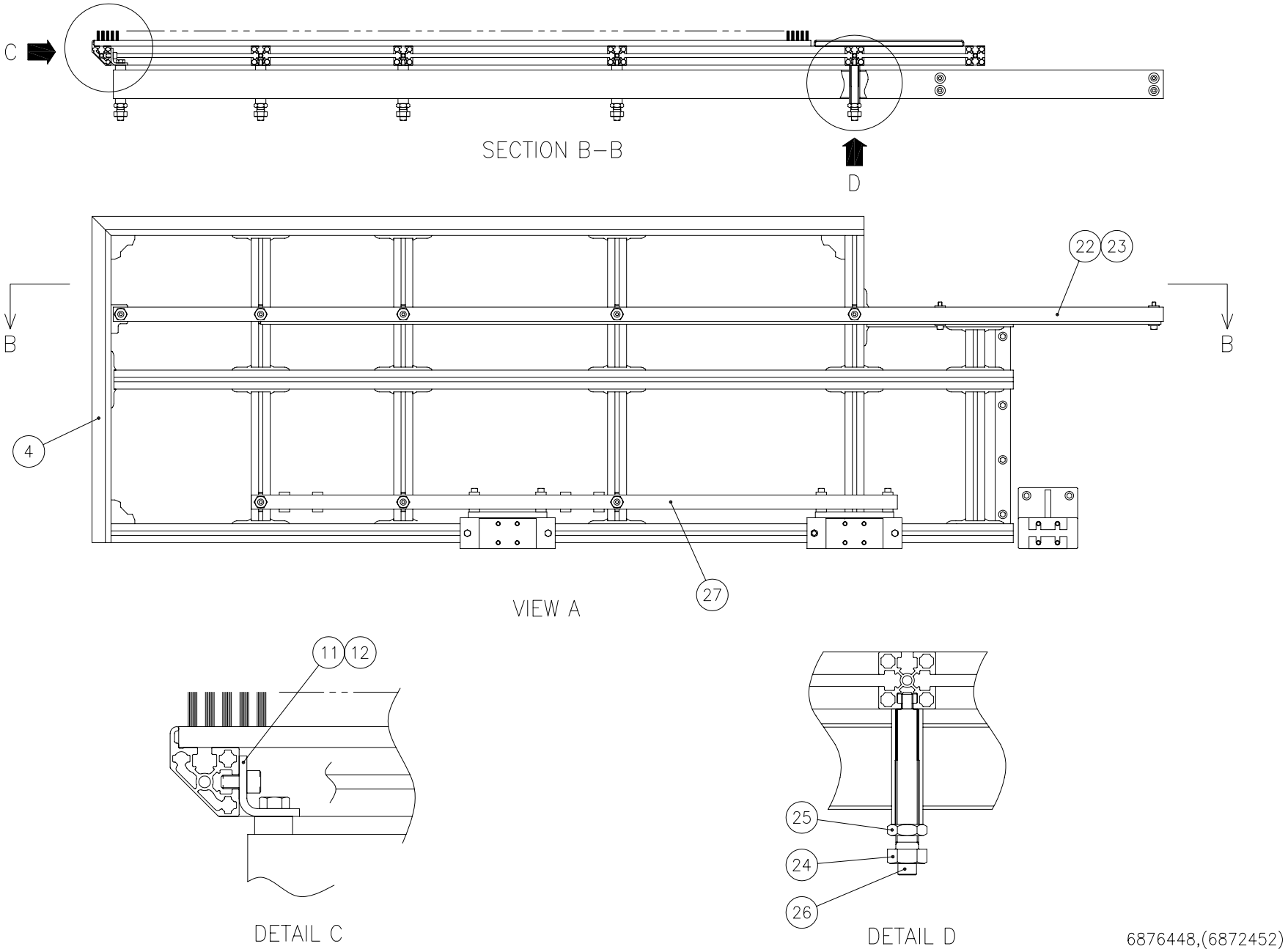
C
SECTION B–B
D
22
23
B
B
4
27
VIEW A
11
12
DETAIL C
25
24
26
DETAIL D
6876448,(6872452)

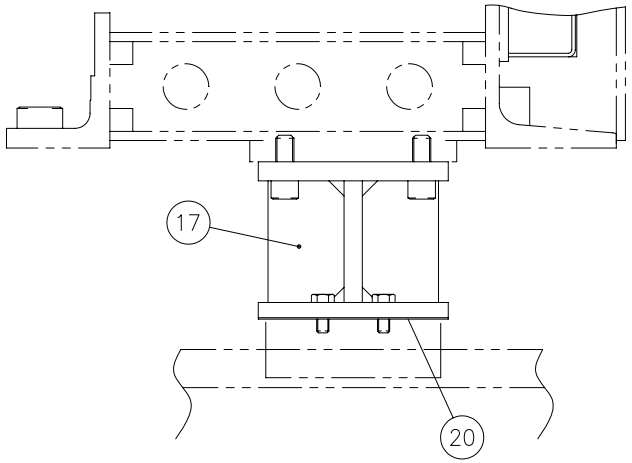

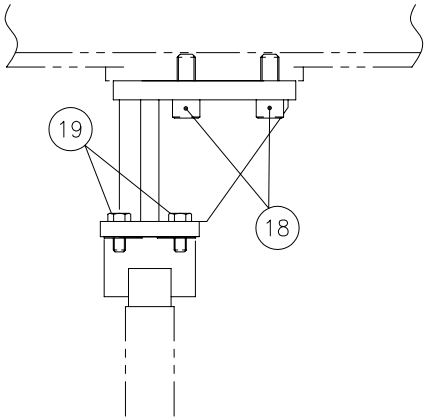

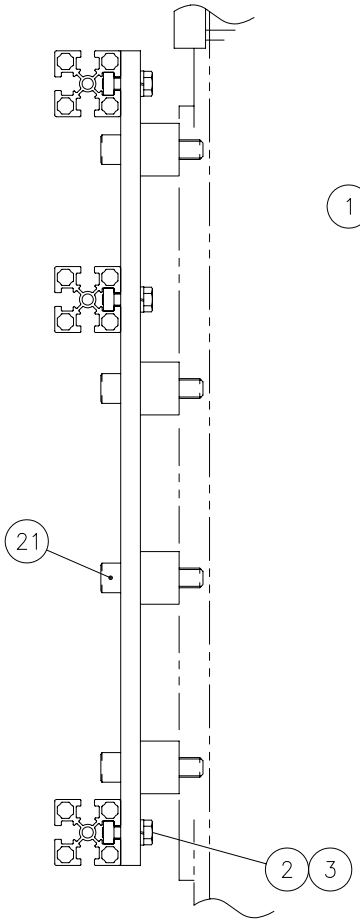

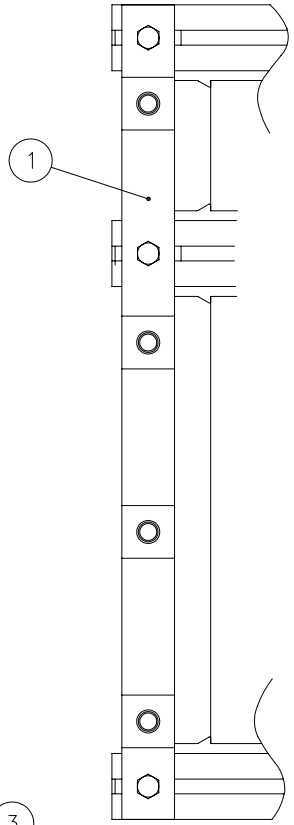

DETAIL G

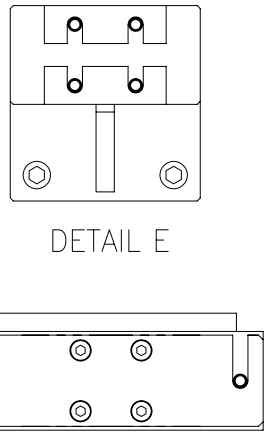

DETAIL E

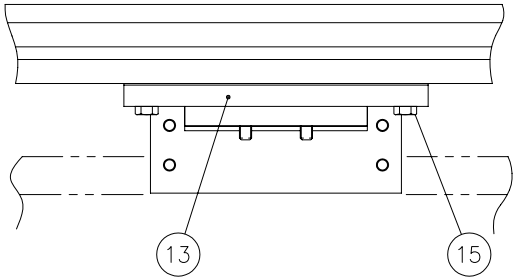

DETAIL F

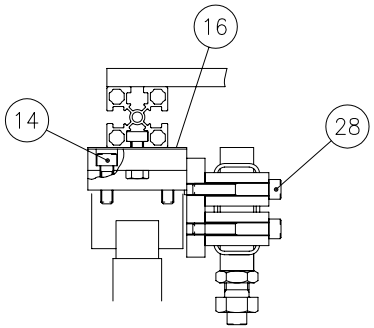

6876448,(6872452)

Index	Code	Parts Name	Drawing No.	Type	Maker	Q'ty	Note
1	74415465	Table Spacer	6828647			1	
2	74183005	Bolt	P330030007	M8X25		3	
3	86610326	Spring Washer	P336050006	8		3	
4	74418395	Moving Table (R)	7830945		NIC	1	
5	74415175	MDF Brush (I-1)	6823682			1	3.2mm
5	74571284	MDF Brush (I-1)	6823627 A			1	4.5mm
6	74722756	Button Head Screw	P334500021	M8X25		15	
7	74578826	MDF Brush (I-2)	6823683			1	3.2mm
7	74571327	MDF Brush (I-2)	6823628 A			1	4.5mm
8	74722756	Button Head Screw	P334500021	M8X25		5	
9	74415466	Cover Table (S-R)	6828662			1	
10	79565423	Hex Soc Cap Screw	P330230004	M8X15		5	
11	74415467	Angle	6828651 A			1	
12	79565423	Hex Soc Cap Screw	P330230004	M8X15		2	
13	74418396	LM Support	6872480			2	
14	79566121	Hex Soc Cap Screw	P330230007	M8X25		8	
15	74183005	Bolt	P330030007	M8X25		4	
16	74571308	Shim	6823604			2	
17	74415468	Moving Table Bracket	6828648			1	

Index	Code	Parts Name	Drawing No.	Type	Maker	Q'ty	Note
18	36367655	Hex Soc Cap Screw	P330250005	M12X30		4	
19	36176605	Bolt	P330030006	M8X20		4	
20	74571309	Shim	6826306			2	
21	79316507	Hex Soc Cap Screw	P330250009	M12X50		4	
22	74418397	Table Guide	6872436	R60X30X2.3		1	
23	10443146	Hex Soc Cap Screw	P330230012	M8X50		4	
24	74415446	Adjustable Bolt	6822812 A			8	
25	78180815	Nut	P332000022	M16(Thin)		8	
26	74707962	Hex Soc Cap Screw	P330230026	M8X120		8	
27	74418398	Auxiliary Arm (1)	6872481	R60X30X2.3		1	
28	10443146	Hex Soc Cap Screw	P330230012	M8X50		8	
29	74568593	Cylinder	7832806 A	SSD-25-15	CKD	1	
30	74569774	Cylinder Collar	6821848			1	
31	79567722	Hex Soc Cap Screw	P330220009	M6X20		4	
32	74314603	Button Head Screw	P334500016	M6X20		4	

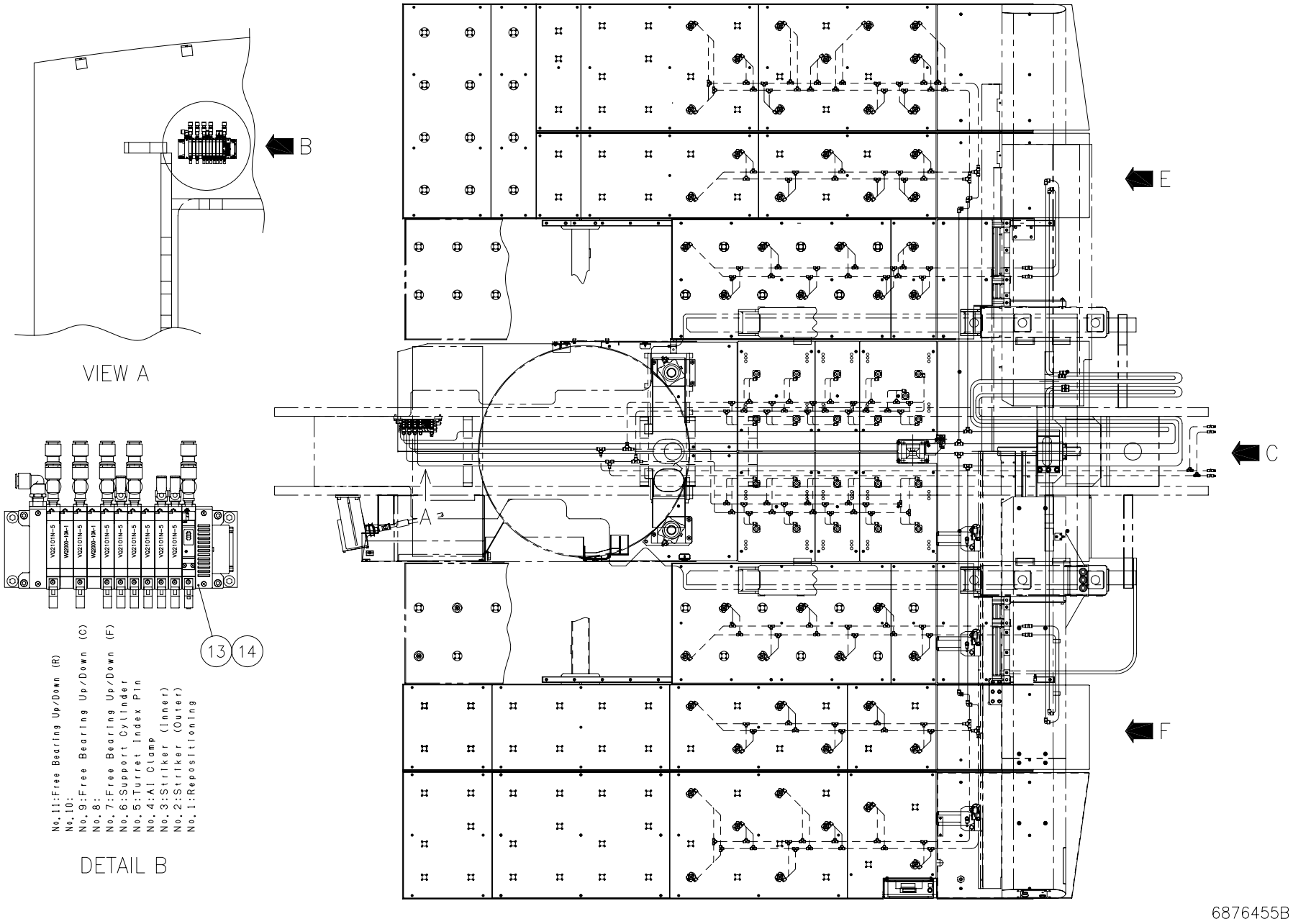
VIEW A
B
DETAIL B
No.11:Free Bearing Up/Down (R)
No.10:
No.9:Free Bearing Up/Down (C)
No.8:
No.7:Free Bearing Up/Down (F)
No.6:Support Cylinder
No.5:Turret Index Pin
No.4:Al Clamp
No.3:Striker (Inner)
No.2:Striker (Outer)
No.1:Repositioning
13
14
A
C
E
F
6876455B

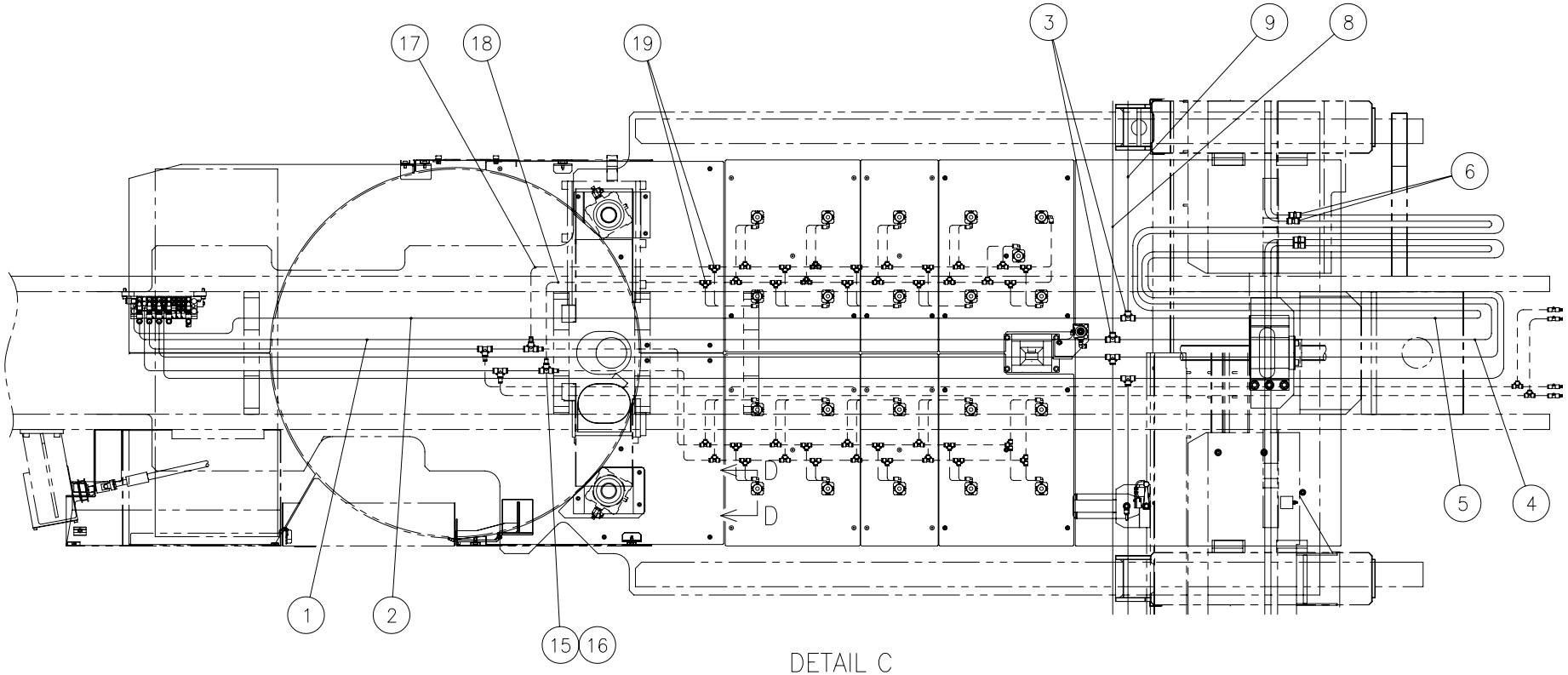

DETAIL C

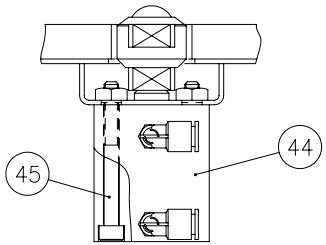

SECTION D–D
(21 Sets)

6876455B

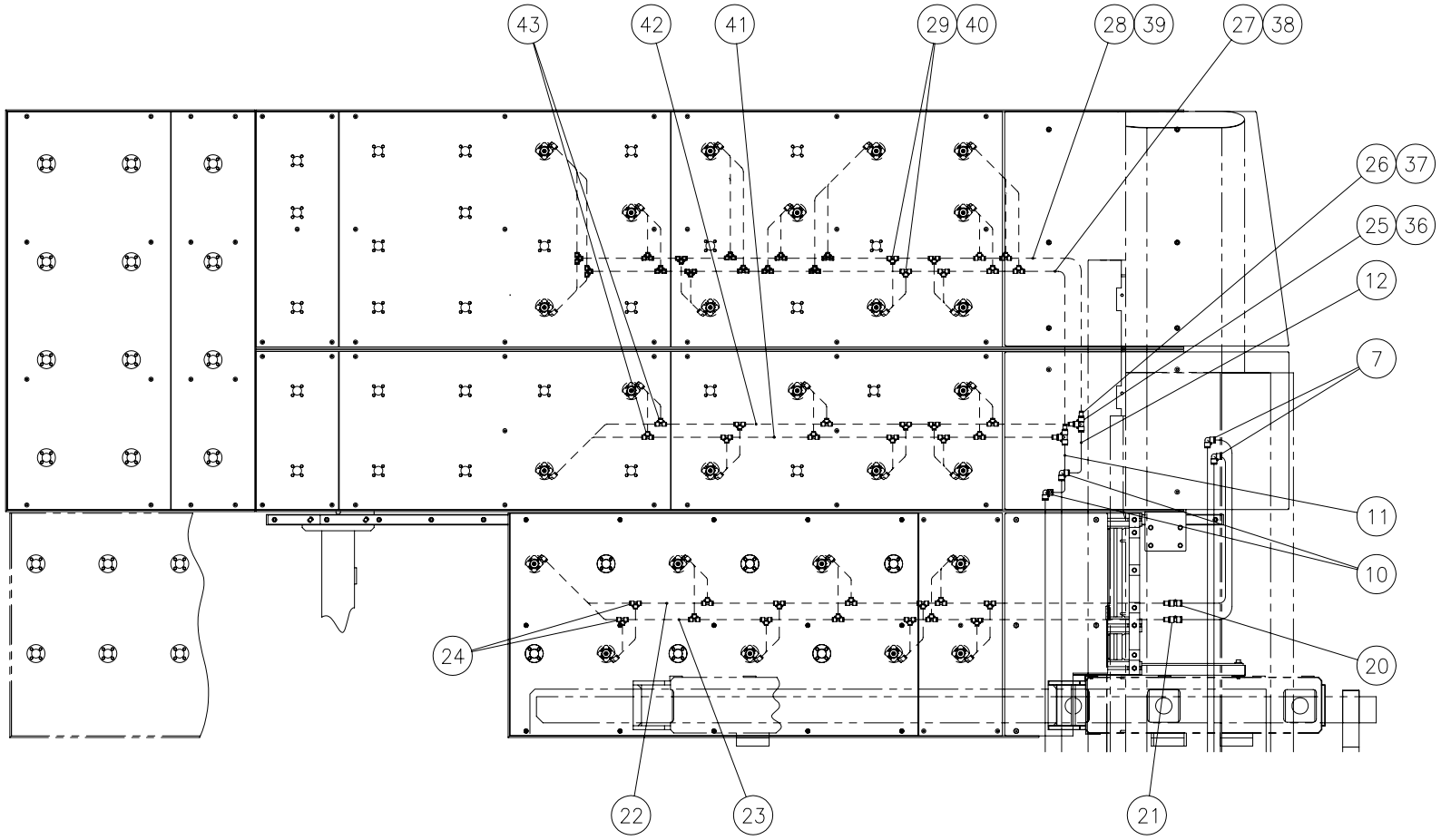

DETAIL E

6876455B

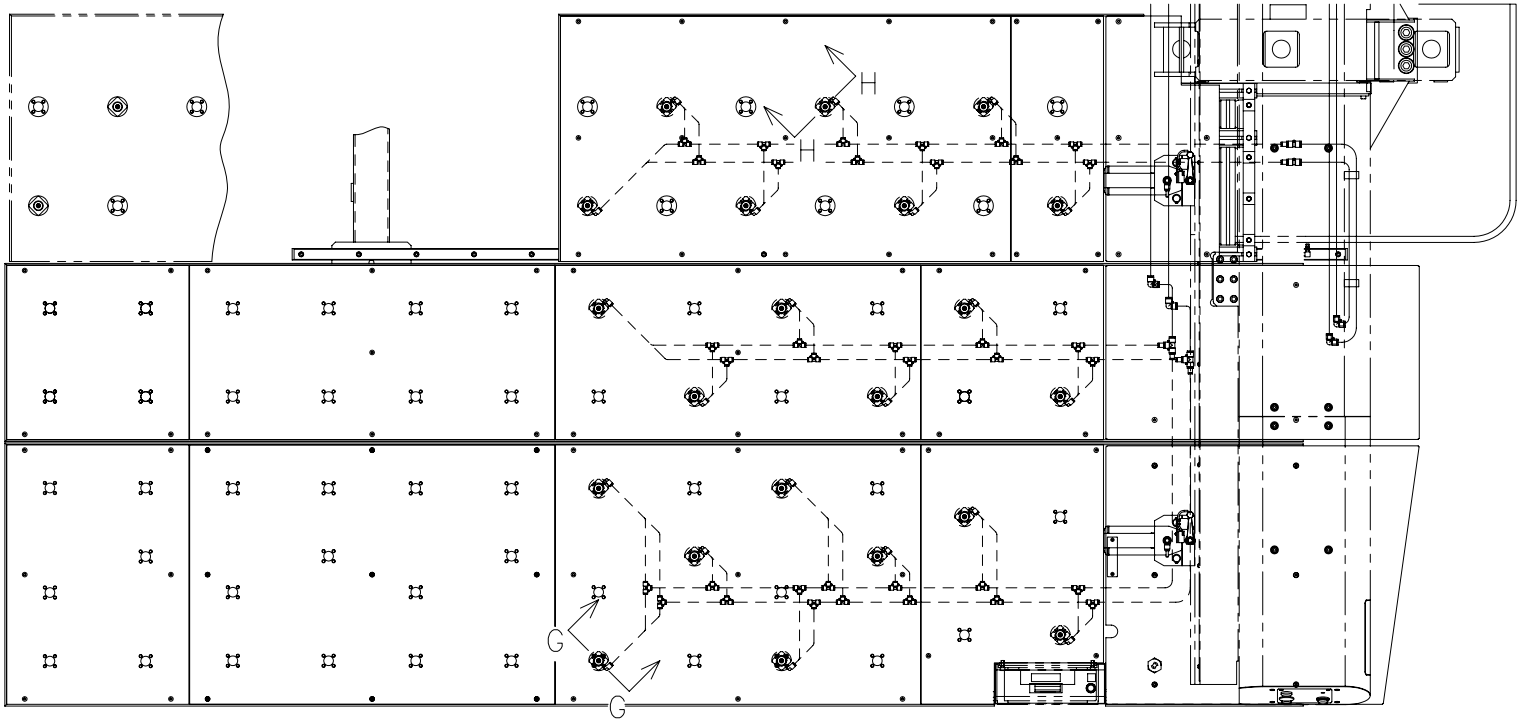

DETAIL F

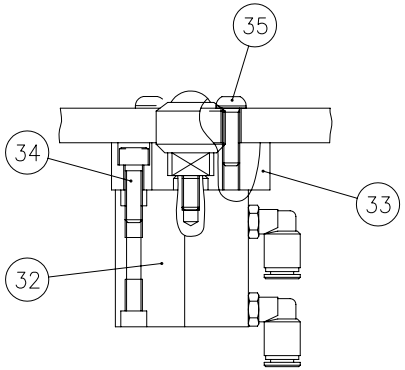

SECTION G–G (Front 14 Sets)
(Rear 18 Sets)

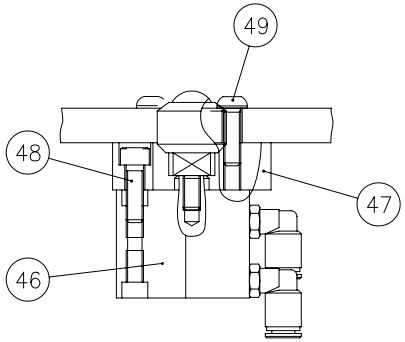

SECTION H–H (Front 7 Sets)
(Rear 8 Sets)

6876455B

Index	Code	Parts Name	Drawing No.	Type	Maker	Q'ty	Note
1	74415489	Plastic Hose	P230242159	N2-4-10X8(Blue)-7M	NITTA MOORE	1	
2	74415487	Plastic Hose	P230242162	N2-4-10X8(Red)-7M	NITTA MOORE	1	
3	74379378	Instant Fitting	P586604013	EUT10	NITTA MOORE	2	
4	74415489	Plastic Hose	P230242159	N2-4-10X8(Blue)-7M	NITTA MOORE	1	
5	74415487	Plastic Hose	P230242162	N2-4-10X8(Red)-7M	NITTA MOORE	1	
6	74565147	Instant Fitting	P586604021	EUC10	NITTA MOORE	2	
7	74379550	Instant Fitting	P586564016	EUL10	NITTA MOORE	2	
8	74415489	Plastic Hose	P230242159	N2-4-10X8(Blue)-7M	NITTA MOORE	1	
9	74415487	Plastic Hose	P230242162	N2-4-10X8(Red)-7M	NITTA MOORE	1	
10	74379550	Instant Fitting	P586564016	EUL10	NITTA MOORE	2	
11	74415489	Plastic Hose	P230242166	N2-4-10X8(Blue)-1M	NITTA MOORE	1	
12	74415487	Plastic Hose	P230242168	N2-4-10X8(Red)-1M	NITTA MOORE	1	
13	74810502	9-Solenoid Valve	7831573	VV5Q21-11-X398	SMC	1	
14	79568702	Hex Soc Cap Screw	P330230008	M8X30		4	
15	74379378	Instant Fitting	P586604013	EUT10	NITTA MOORE	2	
16	74562784	Instant Fitting	P586654002	ER6-10	NITTA MOORE	4	
17	74415492	Plastic Hose	P230222146	N2-4-6X4(Blue)-8M	NITTA MOORE	2	
18	74415488	Plastic Hose	P230222147	N2-4-6X4(Red)-8M	NITTA MOORE	2	
19	74338327	Instant Fitting	P586604012	EUT6	NITTA MOORE	38	

Index	Code	Parts Name	Drawing No.	Type	Maker	Q'ty	Note
20	74565147	Instant Fitting	P586604021	EUC10	NITTA MOORE	2	
21	74562784	Instant Fitting	P586654002	ER6-10	NITTA MOORE	2	
22	74415492	Plastic Hose	P230222148	N2-4-6X4(Blue)-10M	NITTA MOORE	1	
23	74415488	Plastic Hose	P230222149	N2-4-6X4(Red)-10M	NITTA MOORE	1	
24	74338327	Instant Fitting	P586604012	EUT6	NITTA MOORE	14	
25	74379378	Instant Fitting	P586604013	EUT10	NITTA MOORE	2	ASR/RMP
26	74562784	Instant Fitting	P586654002	ER6-10	NITTA MOORE	2	ASR/RMP
27	71512277	Plastic Hose	P230222094	U2-4-6X4(Blue)-5M	NITTA MOORE	2	ASR/RMP
28	74569814	Plastic Hose	P230222093	U2-4-6X4(Red)-5M	NITTA MOORE	2	ASR/RMP
29	74338327	Instant Fitting	P586604012	EUT6	NITTA MOORE	2	ASR/RMP
30	74731207	Instant Fitting	P586604019	EUC6	NITTA MOORE	4	ASR/RMP (List Only)
31	74416455	Pneumatic Plug	P586648011	BC6	NITTA MOORE	4	ASR/RMP (List Only)
32	74568610	Cylinder	7832804 A	SSD-L-25-15-T5V5-H	CKD	1	
33	74569774	Cylinder Collar	6821848			1	
34	79567722	Hex Soc Cap Screw	P330220009	M6X20		4	
35	74314603	Button Head Screw	P334500016	M6X20		4	
36	74379378	Instant Fitting	P586604013	EUT10	NITTA MOORE	2	ASR
37	74562784	Instant Fitting	P586654002	ER6-10	NITTA MOORE	4	ASR
38	74415492	Plastic Hose	P230222148	N2-4-6X4(Blue)-10M	NITTA MOORE	1	ASR

Index	Code	Parts Name	Drawing No.	Type	Maker	Q'ty	Note
39	74415488	Plastic Hose	P230222149	N2-4-6X4(Red)-10M	NITTA MOORE	1	ASR
40	74338327	Instant Fitting	P586604012	EUT6	NITTA MOORE	20	ASR
41	74415492	Plastic Hose	P230222148	N2-4-6X4(Blue)-10M	NITTA MOORE	1	ASR
42	74415488	Plastic Hose	P230222149	N2-4-6X4(Red)-10M	NITTA MOORE	1	ASR
43	74338327	Instant Fitting	P586604012	EUT6	NITTA MOORE	12	ASR
44	74568610	Cylinder	7832804 A	SSD-L-25-15-T5V5-H		1	
45	74706157	Hex Soc Cap Screw	P330210015	M5X50		4	
46	74568593	Cylinder	7832806 A	SSD-25-15		1	
47	74569774	Cylinder Collar	6821848			1	
48	79567722	Hex Soc Cap Screw	P330220009	M6X20		4	
49	74314603	Button Head Screw	P334500016	M6X20		4	

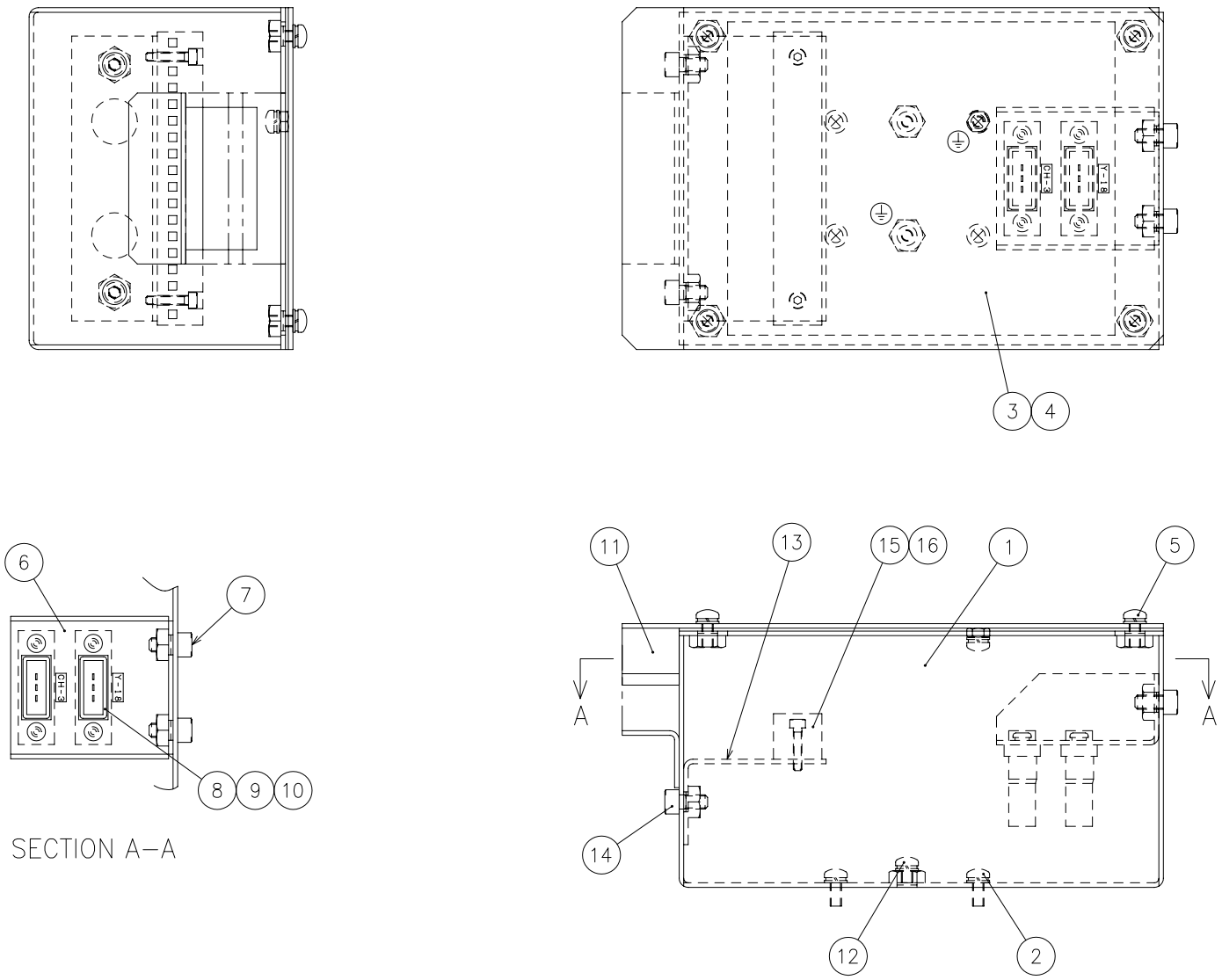

6824778

Index	Code	Parts Name	Drawing No.	Type	Maker	Q'ty	Note
1	74575144	Relay Box (FC)	6824767			1	
2	74570030	Pan Head Screw with Washer	P334200115	M4X10(Chromate P-4)		4	
3	74575147	Relay Box (FC) Cover	6824768			1	
4	74575224	Packing (FC)	6824769			1	
5	74570033	Pan Head Screw with Washer	P334200134	M5X10(Chromate P-4)		4	
6	74575149	Housing Plate (FC)	6826465			1	
7	79573416	Hex Soc Cap Screw	P330210003	M5X10		2	
8	74386502	Rectangle Connector	P862042073	1-178802-3	AMP	2	
9	74386503	Plug Type Terminal	P862142036	175289-5	AMP	6	
10	74386505	Accessory For Connector	P862182002	900128-2	AMP	4	
11	74387020	Sponge Rubber	P230580063	CR-T20X20X60		2	
12	74569811	Pan Head Screw with Washer	P334200113	M4X6(Chromate P-4)		3	(Ground)
13	74575145	Bracket (F)	6824764			1	
14	79573416	Hex Soc Cap Screw	P330210003	M5X10		2	
15	74569809	Block Terminal	P864008047	MK4/16KRG	WEIDMULLER	1	
16	79316101	Hex Soc Cap Screw	P330200006	M3X15		2	

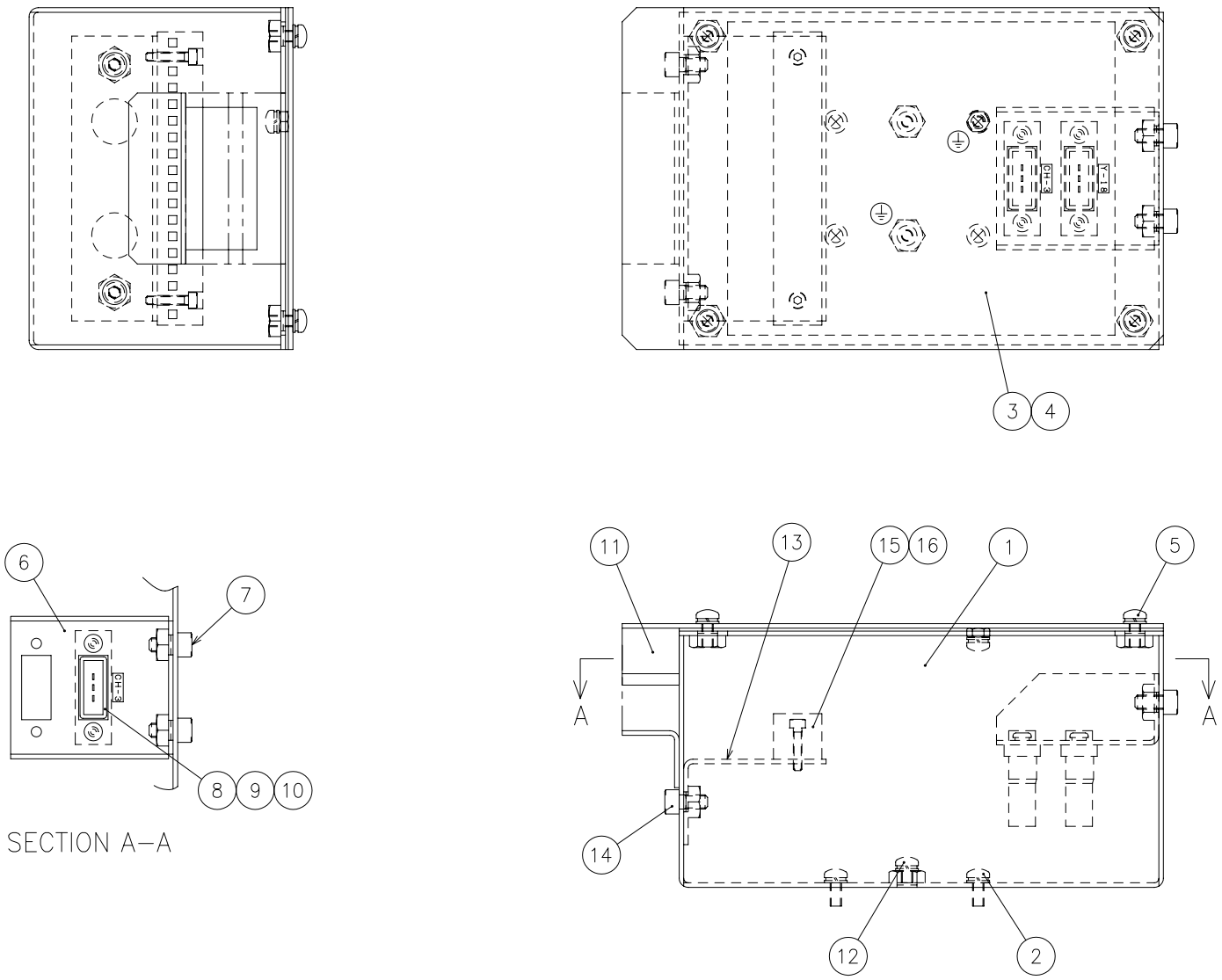

6824779

From Serial No.36102001 and after

Index	Code	Parts Name	Drawing No.	Type	Maker	Q'ty	Note
1	74575144	Relay Box (FC)	6824767			1	
2	74570030	Pan Head Screw with Washer	P334200115	M4X10(Chromate P-4)		4	
3	74575147	Relay Box (FC) Cover	6824768			1	
4	74575224	Packing (FC)	6824769			1	
5	74570033	Pan Head Screw with Washer	P334200134	M5X10(Chromate P-4)		4	
6	74575149	Housing Plate (FC)	6826465			1	
7	79573416	Hex Soc Cap Screw	P330210003	M5X10		2	
8	74386502	Rectangle Connector	P862042073	1-178802-3	AMP	1	
9	74386503	Plug Type Terminal	P862142036	175289-5	AMP	3	
10	74386505	Accessory For Connector	P862182002	900128-2	AMP	2	
11	74387020	Sponge Rubber	P230580063	CR-T20X20X60		2	
12	74569811	Pan Head Screw with Washer	P334200113	M4X6(Chromate P-4)		3	(Ground)
13	74575145	Bracket (F)	6824764			1	
14	79573416	Hex Soc Cap Screw	P330210003	M5X10		2	
15	74569809	Block Terminal	P864008047	MK4/16KRG	WEIDMULLER	1	
16	79316101	Hex Soc Cap Screw	P330200006	M3X15		2	

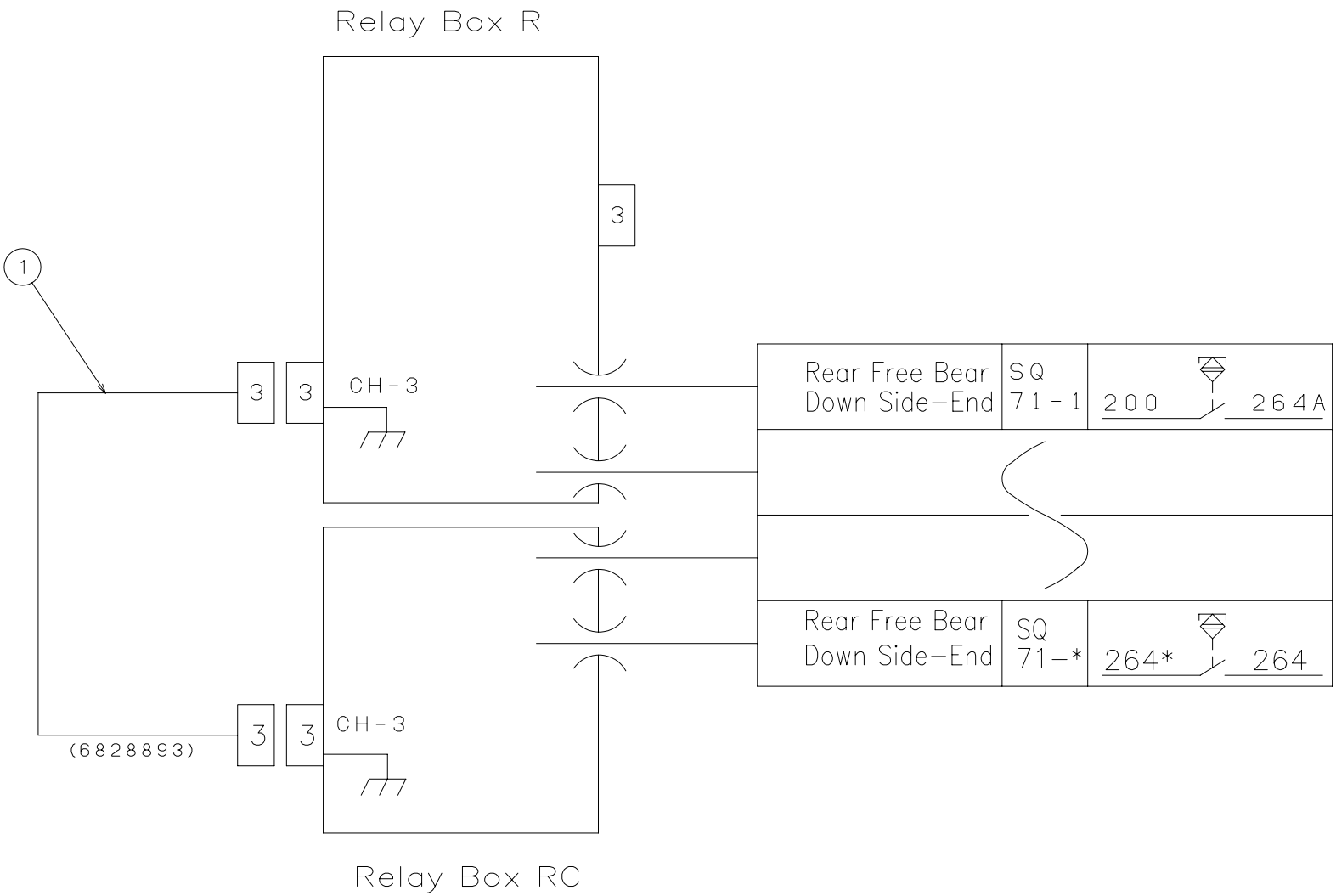

6676431
(6877711C)

Unit No. 202

RMP-C(7) From Serial No.36102001 and after

Index	Code	Parts Name	Drawing No.	Type	Maker	Q'ty	Note
1	74417293	Cable CH-3	6828893 A			1	

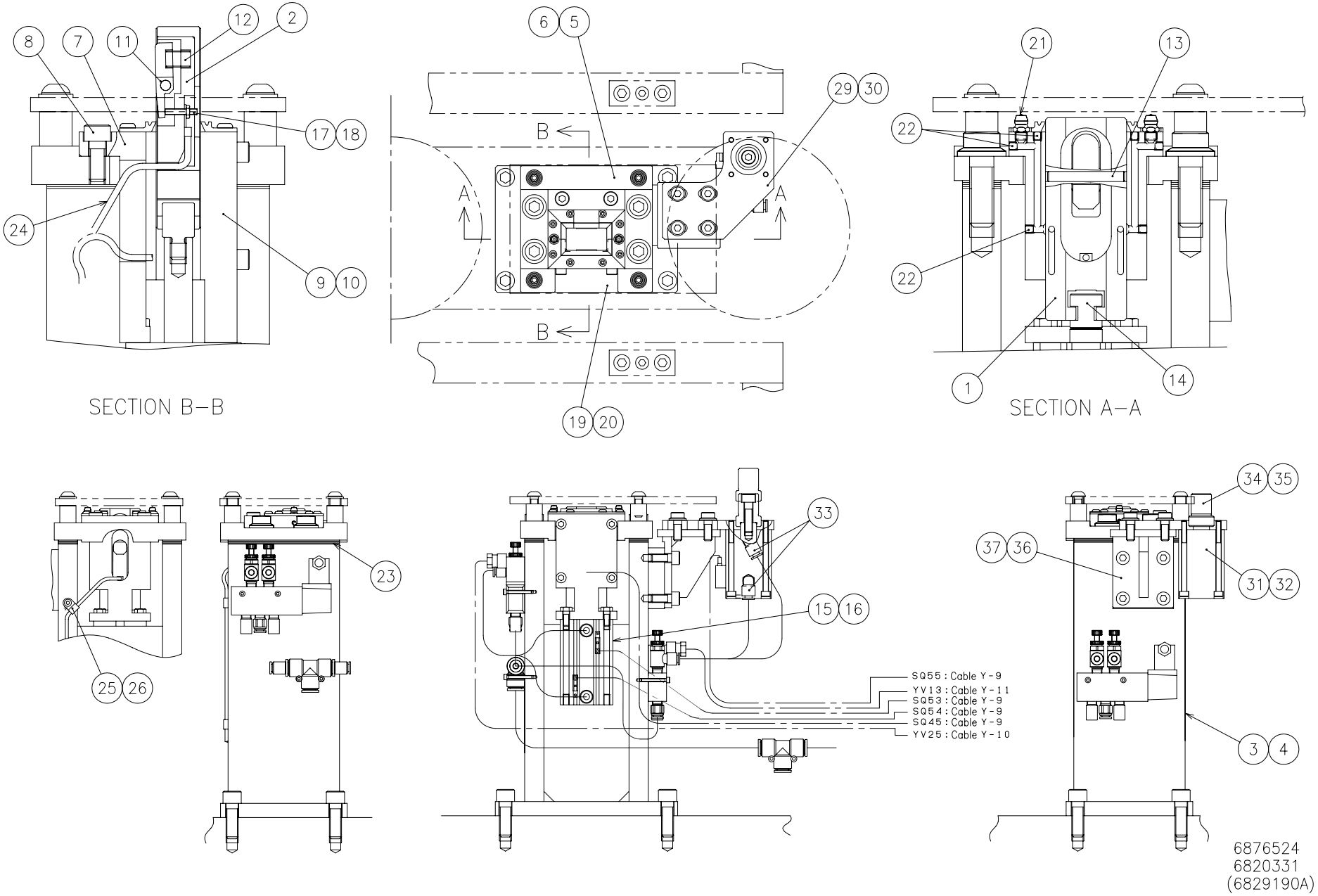
SECTION B–B
SECTION A–A
A
B
SQ55 : Cable Y-9
YV13 : Cable Y-11
SQ53 : Cable Y-9
SQ54 : Cable Y-9
SQ45 : Cable Y-9
YV25 : Cable Y-10
6876524
6820331
(6829190A)

Index	Code	Parts Name	Drawing No.	Type	Maker	Q'ty	Note
1	74570710	Stopper	6820349			1	
2	74570711	Insulator	6820350			1	
3	74578866	Locating Pin Base	6820345 A			1	
4	36110743	Hex Soc Cap Screw	P330250006	M12X35		4	
5	74417280	Locating Pin Bracket	6827662 A			1	
6	74731349	Flange Socket Bolt	P330460004	M12X35		4	
7	74578867	Guide (R)	6820359 A			1	
8	79564804	Hex Soc Cap Screw	P330230006	M8X20		2	
9	74578868	Guide (F)	6820347 A			1	
10	79565422	Hex Soc Cap Screw	P330220011	M6X25		4	
11	74573709	X-axis Touch Sensor Assy	0829974 C			1	
12	74573710	Coil Spring	P320005050	WT8-15	MISUMI	1	
13	74386149	Pin	0830525			1	
14	74570713	Floating Joint	P550082080	YU-03	SMC	1	
15	74419178	Pneumatic Cylinder		RDQA40-45D-A93V	SMC	1	
16	86620038	Bolt	P330020005	M6X15		4	
17	74573711	Socket Set Screw	P330570087	M3X15(Dog-end)-A2-70		1	
18	74570716	Nut	P332000149	M3(Type-3)-A2-70		1	
19	74386161	Slide Seal	0830529			1	

Index	Code	Parts Name	Drawing No.	Type	Maker	Q'ty	Note
20	74535406	Button Head Screw	P334500005	M4X10		8	
21	74577669	Grease Nipple	P560608004	NP6X5	THK	2	
22	74566095	Socket Set Screw	P330550007	M4X4(Flat-end)		6	
23	74570718	Shim	6820351			8	
24	74578869	Touch Sensor Cable	6820358 A			1	
25	74570719	Cable Band	P381058098	CCH12-S10-M	PANDUIT	2	
26	79573416	Hex Soc Cap Screw	P330210003	M5X10		2	
27	74382938	Terminal	P869150001	CE-1		6	List Only
28	36161077	Instant Fitting	P586533065	KQ2H06-01S	SMC	2	List Only
29	74570720	Cylinder Base	6820353			1	
30	75420815	Flange Socket Bolt	P330468001	M8X20	NISSAN NEJI	4	
31	74561552	Pneumatic Cylinder	P550012482	CDQ2BS32-25D-A73HLS	SMC	1	
32	79316115	Hex Soc Cap Screw	P330210022	M5X70		4	
33	74310045	Instant Fitting	P586564001	EL6-PT1/8	NITTA MOORE	2	
34	74561553	Center Y-axis Pin	6573832			1	
35	79568702	Hex Soc Cap Screw	P330230008	M8X30		1	
36	74570721	Center Y-axis Bracket	6820354			1	
37	79564804	Hex Soc Cap Screw	P330230006	M8X20		4	

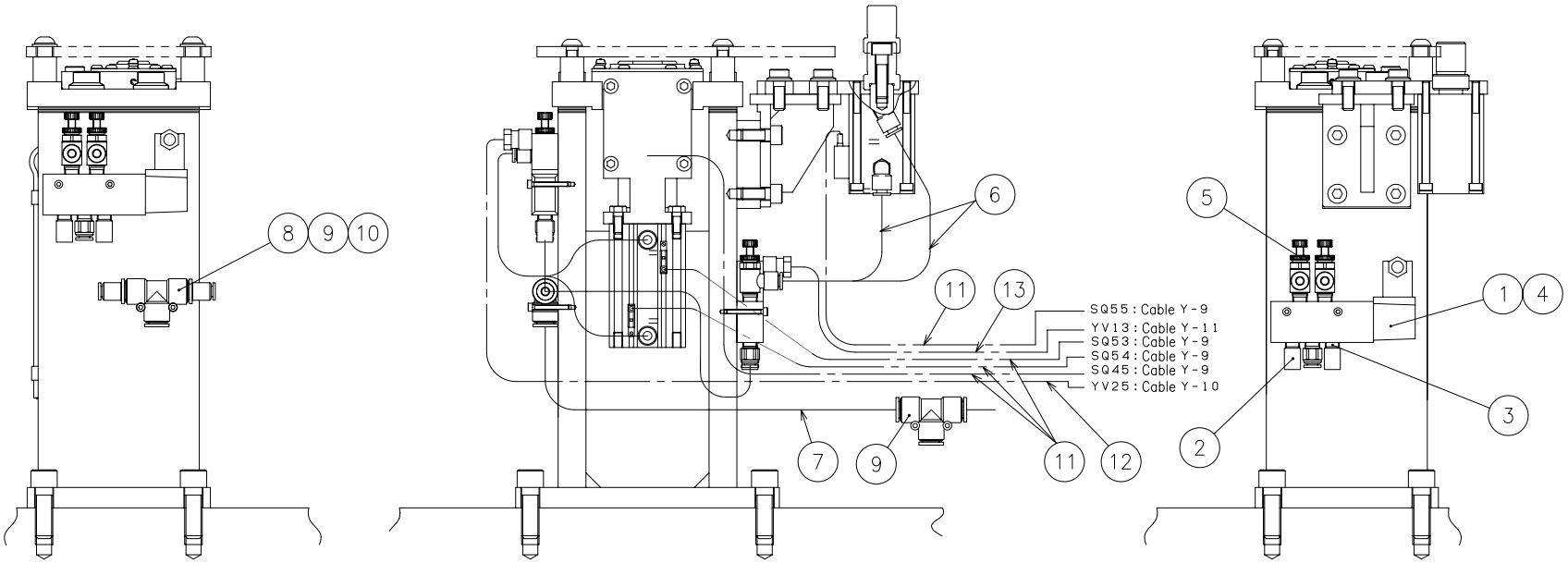

6877645
6877646
(6829190A)

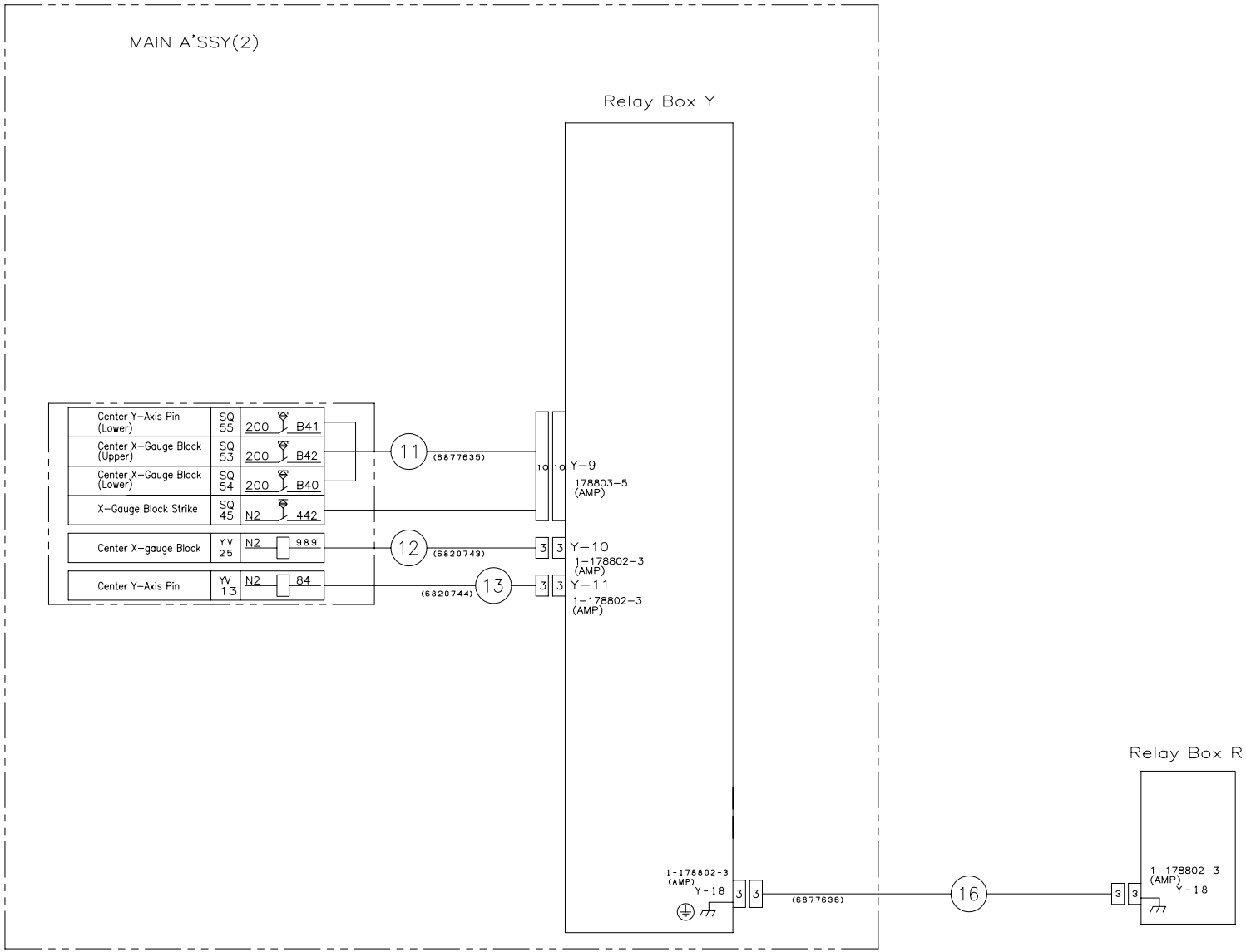

6877645
6877646
(6829190A)

From Serial No.36102001 and after

Index	Code	Parts Name	Drawing No.	Type	Maker	Q'ty	Note
1	74570722	Air Directional Valve	P556002349	VZ5120-5DZC-01	SMC	1	
2	74722868	Silencer	P557032003	AN103-01	SMC	4	
3	74351914	Instant Fitting	P586534002	EC6-PT1/8	NITTA MOORE	2	
4	74384797	Hex Soc Cap Screw	P330200034	M3X45		2	
5	74567039	Air Flow Control Valve	P555007004	ESC6-PT1/8-I	NITTA MOORE	2	
6	71371426	Plastic Hose	P230222134	N2-4-6X4(Black)-1M	NITTA MOORE	2	
7	71371423	Plastic Hose	P230242076	N2-4-10X8(Black)-1.5M	NITTA MOORE	1	
8	74578871	Instant Fitting	P586628089	GWFY6-8	CKD	1	
9	74578872	Instant Fitting	P586538103	GWS10-8-M	CKD	1	
10	31180180	Hex Soc Cap Screw	P330200009	M3X20		1	
11	74419179	Cable Y-9	6877635			1	
12	74570724	Cable Y-10	6820743			1	
13	74570725	Cable Y-11	6820744			1	
14	74419180	Air Directional Valve	P556002455	VZ5120-5DZC-C6	SMC	1	List Only
15	36368119	Washer	P336000002	3(Small Round)		2	List Only
16	74419181	Cable Y-18	6877636			1	

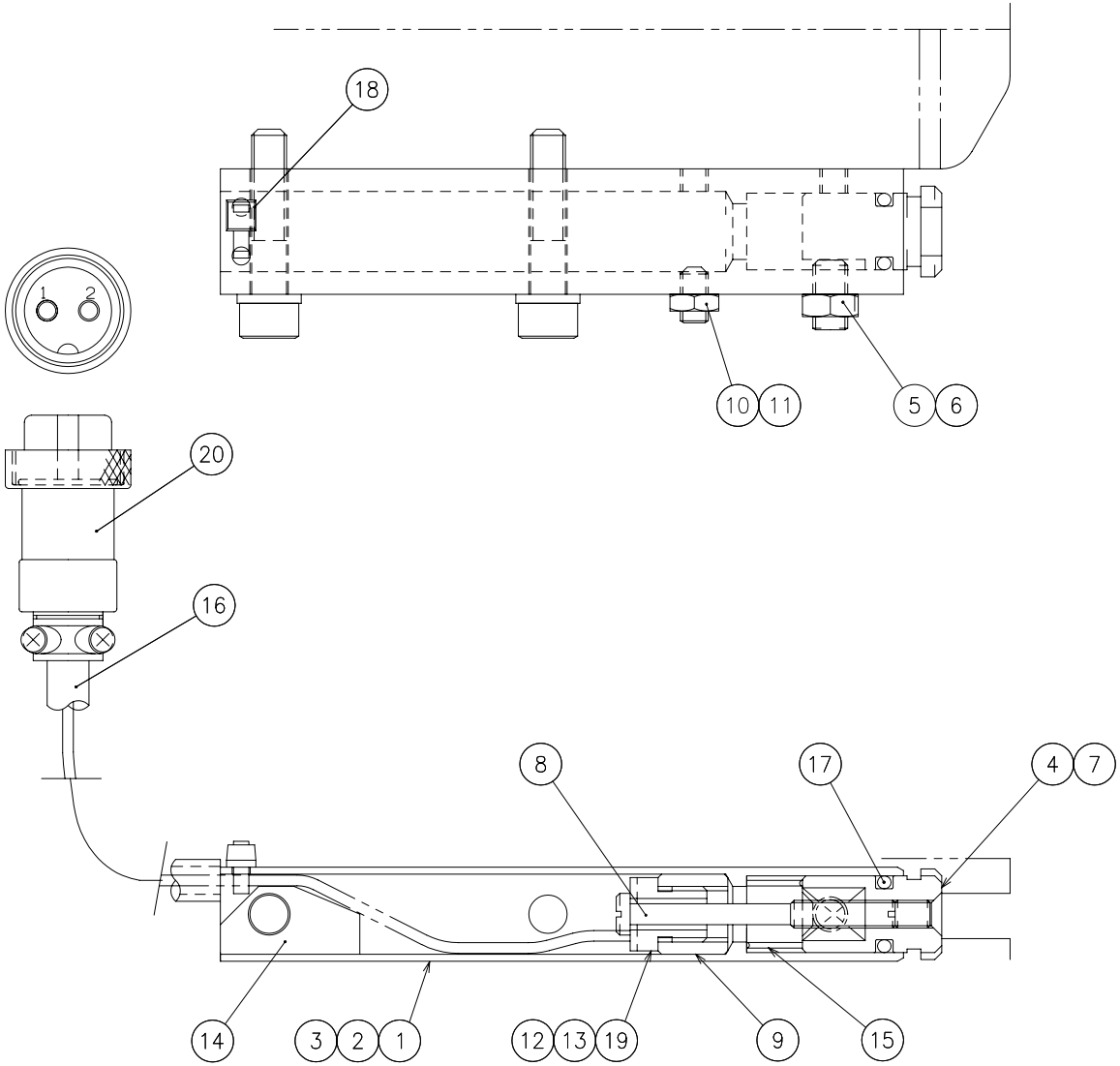

7420920E

Index	Code	Parts Name	Drawing No.	Type	Maker	Q'ty	Note
1	74573823	Sensor Holder	1542194 B			1	
2	79316111	Hex Soc Cap Screw	P330210010	M5X25		2	
3	79567114	Spring Washer	P336050004	5		2	
4	74569468	Stopper	7420921 A			1	
5	36147503	Socket Set Screw	P330550018	M5X10(Flat Type)		1	
6	78186244	Nut	P332000016	M5(Thin)		1	
7	71102223	Socket Set Screw	P330550008	M4X5(Flat Type)		1	
8	74569469	Screw	1542196 A			1	
9	74379829	Insulator	0849943			1	
10	74305502	Socket Set Screw	P330590052	M4X8(Cup-end)		1	
11	74716224	Nut	P332000015	M4(Thin)		1	
12	74573699	Screw	1542197 C			1	
13	74569471	Vinyl Cord (P.V.C)	P342208004	ME15EU13-1.5M	JUNKOSHA	1	
14	74569262	Packing	7420922			1	
15	74573867	Spring	7831012		FUTABA HATSUJO	1	
16	31182101	Plastic Hose	P230218010	UH30-06(Black)-1.1M	JUNKOSHA	1	
17	74569264	O Ring	P590000249	4D-P7		1	
18	74569473	Cable Band	P381058104	SKB-85MM	KITAGAWA	1	
19	74569474	Tube	P230348005	A-1.5X0.2(Black)	SEI	1	

From Serial No.36102001 and after

Index	Code	Parts Name	Drawing No.	Type	Maker	Q'ty	Note
20	74569254	Metallic Connector	P860038003	PLT-162-P	MISUMI	1	

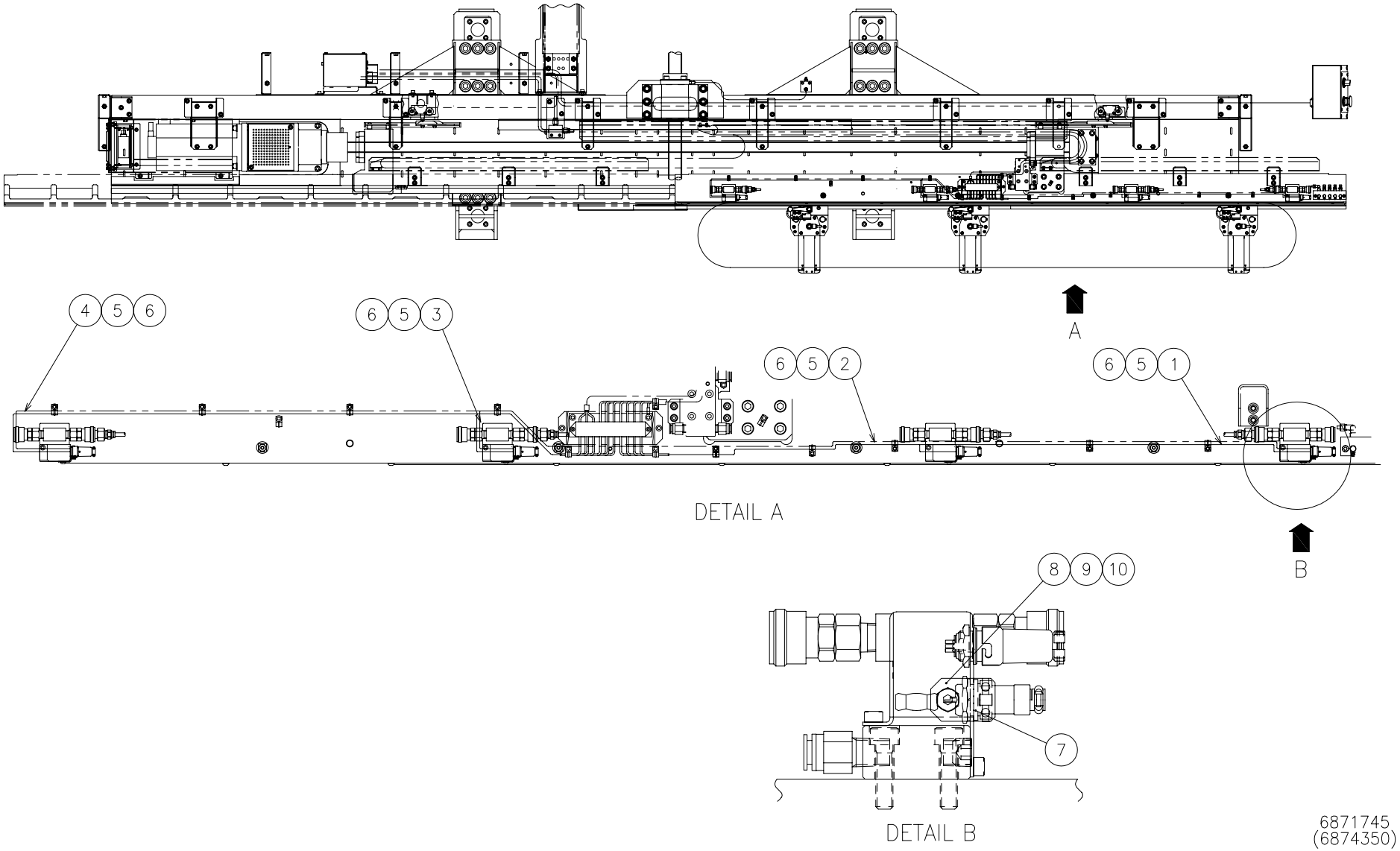
4 5 6
6 5 3
6 5 2
6 5 1
A
B
DETAIL A
8 9 10
7
DETAIL B
6871745
(6874350)

Unit No. 206

RMP-C(11) From Serial No.36102001 and after

Index	Code	Parts Name	Drawing No.	Type	Maker	Q'ty	Note
1	74575170	Cabtire Cable	P342301945	VCTF0.5X2X800		1	
2	74575154	Cabtire Cable	P342301946	VCTF0.5X2X1400		1	
3	74416444	Cabtire Cable	P342301947	VCTF0.5X2X400		1	
4	74416445	Cabtire Cable	P342301948	VCTF0.5X2X1200		1	
5	75419408	Marker Tube	P869220208	0.5		8	
6	74310420	Cable Band	P381058020	CV-175N	SHIBAKEI	10	
7	74164041	Metallic Connector	P860038004	PLT-162-R	MISUMI	4	
8	74569256	Loose Stopper Plate	7420749			4	
9	36501002	Hex Soc Cap Screw	P330210002	M5X8		4	
10	74307821	Cable Band	P381058012	CV-150N	SHIBAKEI	4	

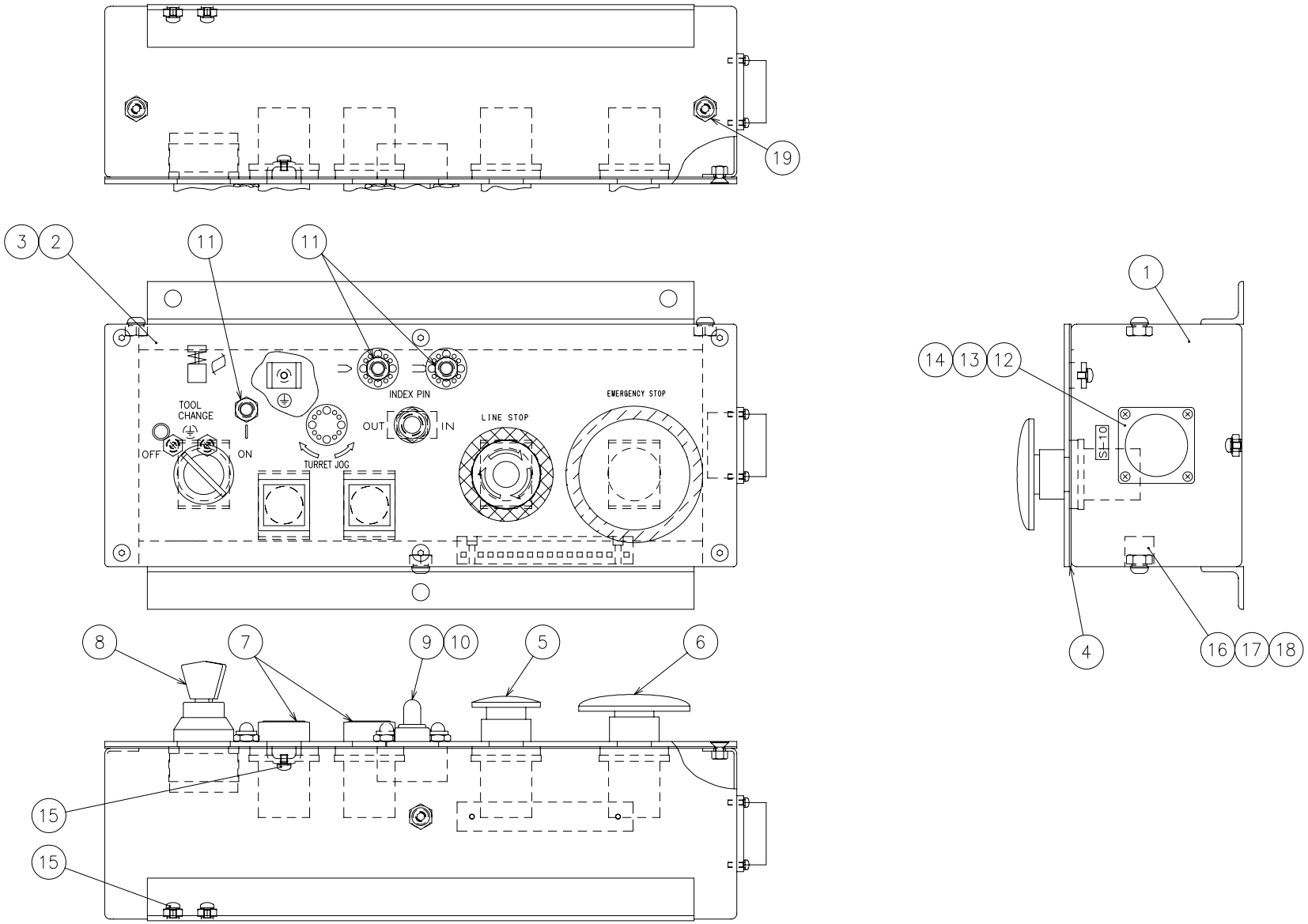
19
3
2
11
11
TOOL
CHANGE
OFF
ON
INDEX PIN
OUT
IN
TURRET JOG
LINE STOP
EMERGENCY STOP
1
14
13
12
SI-10
4
16
17
18
8
7
9
10
5
6
15
15

6870520

From Serial No.36102001 and after

Index	Code	Parts Name	Drawing No.	Type	Maker	Q'ty	Note
1	74570045	Sub Control Box (CE)	6820270			1	
2	74416460	Legend Plate (Sub Control)	6870528			1	for EU,EXP
2	74419503	Legend Plate (Sub Control)	6817591			1	Chinese
3	79321267	Flat Head Bolt	P334520006	M5X10		6	
4	74570047	Packing (CE Sub-Operation Box)	6820272			1	
5	74568712	Push Switch	P821124128	AR30V3R-01BZ235	FUJI Electric	1	Line Stop
6	74570048	Push Switch	P821124129	AR30V1R-02R-Z037	FUJI Electric	1	Emergency Stop
7	74570049	Push Switch	P821084087	AR22F0S-10W-Z037	FUJI Electric	2	Turret Jog
8	74415122	Key Select Switch	P820014100	AR30JR-2D01A	FUJI Electric	1	Tool Change
9	74568080	Toggle Switch	7833079	SDT-110G-02SCAU	SHINDEN	1	Index Pin (OUT/IN)
10	75419224	Accessory For Toggle Switch	P823088001	WD1911	MATSUSHITA	1	
11	74381663	Indicator Apparatus	P843018002	BD-1402G	OKAYA	3	
12	74382195	Plastic R Connector	P862032008	206838-1	AMP	1	24P
13	75419126	Plug Type Terminal	P862142012	66103-2	AMP	24	
14	74569454	Pan Head Screw with Washer	P334200145	M3X8(Chromate P-4)		4	
15	74569811	Pan Head Screw with Washer	P334200113	M4X6(Chromate P-4)		3	
16	74569809	Block Terminal	P864008047	MK4/16KRG	WEIDMULLER	1	
17	74386496	Plug Type Terminal	P862148024	H0.75/15	WEIDMULLER	5	
18	79316101	Hex Soc Cap Screw	P330200006	M3X15		2	

From Serial No.36102001 and after

Index	Code	Parts Name	Drawing No.	Type	Maker	Q'ty	Note
19	36379029	Button Head Screw	P334500013	M6X10		3	

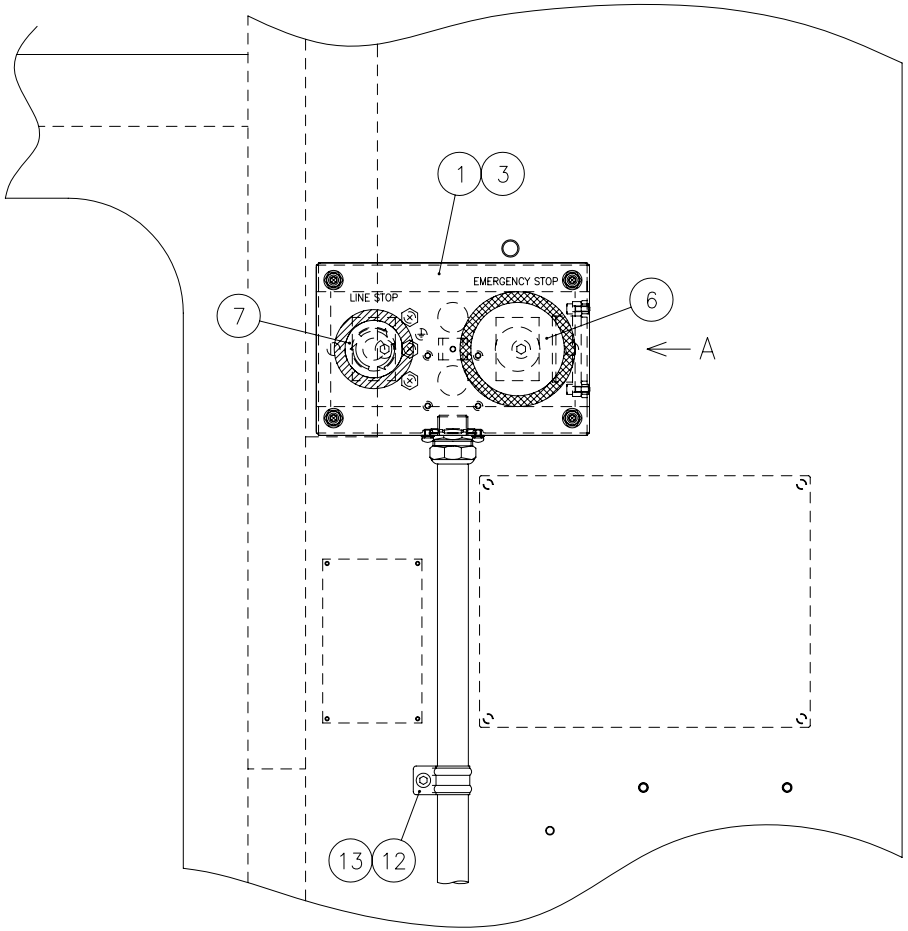

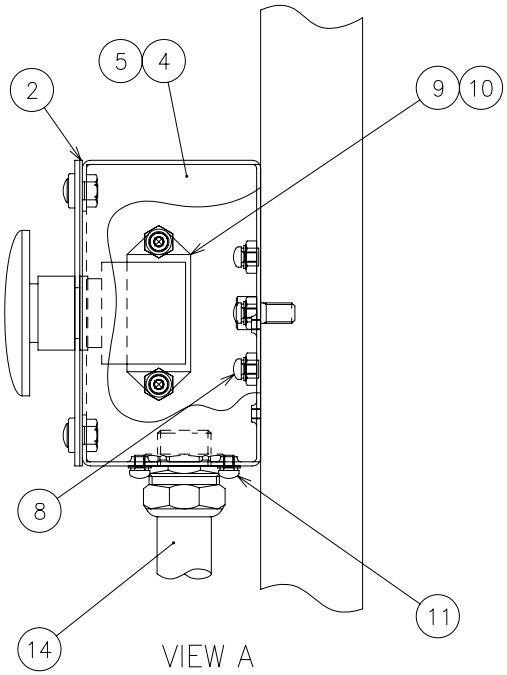

6870527
6879488

Index	Code	Parts Name	Drawing No.	Type	Maker	Q'ty	Note
1	74416469	Legend Plate(SW.Operating)(A)	6824977			1	for EU,EXP
1	74419504	Legend Plate(SW.Operating)(A)	6817592			1	Chinese
2	74416468	Packing	6824981			1	
3	74722794	Knob Bolt	P338048001	Faced Screw -NO.2-M5X10	Tokyo Byora	4	
4	74416474	Switch Operating Box L	6870518			1	
5	79565423	Hex Soc Cap Screw	P330230004	M8X15		2	
6	74570048	Push Switch	P821124129	AR30V1R-02R-Z037	FUJI Electric	1	Emergency Stop
7	74568712	Push Switch	P821124128	AR30V3R-01BZ235	FUJI Electric	1	Line Stop
8	74569811	Pan Head Screw with Washer	P334200113	M4X6(Chromate P-4)		4	(Ground)
9	74386516	Rectangle Connector	P862138054	KS4KRG/D4	WEIDMULLER	1	
10	86611902	Hex Soc Cap Screw	P330200016	M4X12		2	
11	74569811	Pan Head Screw with Washer	P334200113	M4X6(Chromate P-4)		4	
12	74732128	Saddle For Conduct	P381017093	CH-15(D6.2)	DAIWA DENGYO	1	
13	79564305	Hex Soc Cap Screw	P330220006	M6X15		1	
14	74419182	Cable L	6878339			1	

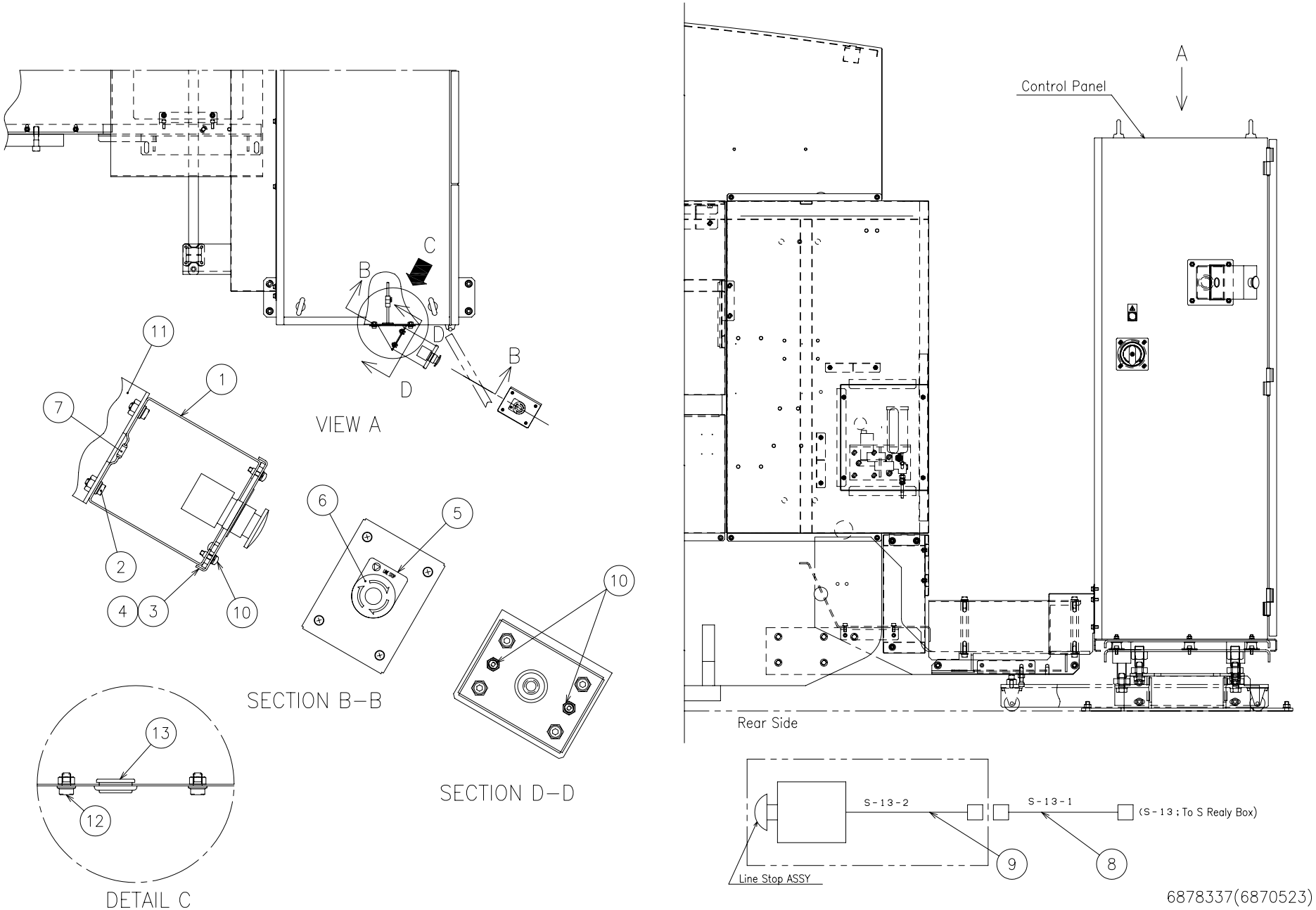
VIEW A
SECTION B–B
SECTION D–D
DETAIL C
Control Panel
Rear Side
Line Stop ASSY
S-13-2
S-13-1
(S-13 ; To S Realy Box)
6878337(6870523)

From Serial No.36102001 and after

Index	Code	Parts Name	Drawing No.	Type	Maker	Q'ty	Note
1	74572579	Push Button Box	6018276 A			1	
2	74731367	Flange Socket Bolt	P330468026	M6X12	NISSAN NEJI	4	
3	74572580	Cap	6018277 A			1	
4	74575288	Pan Head Screw with Washer	P334200117	M4X15(Chromate P-4)		4	
5	74307644	Legend Plate	6502736			1	for EU,EXP
5	74419506	Legend Plate	6817594			1	Chinese
6	74568712	Push Switch	P821124128	AR30V3R-01BZ235	FUJI Electric	1	Line Stop
7	74380555	Bush For Cable	P229112017	C-30-NG-79-E	TAKIGEN	1	
8	74416458	Cable S-13-1	6811424			1	
9	74416459	Cable S-13-2	6811441			1	
10	74569457	Pan Head Screw with Washer	P334200114	M4X8(Chromate P-4)		3	(Ground)
11	74416457	Line Stopper Bracket	6827674			1	
12	75420638	Flange Socket Bolt	P330468018	M8X12	NISSAN NEJI	4	
13	74732487	Bush For Cable	P229112039	C-30-SG-30A	TAKIGEN	1	

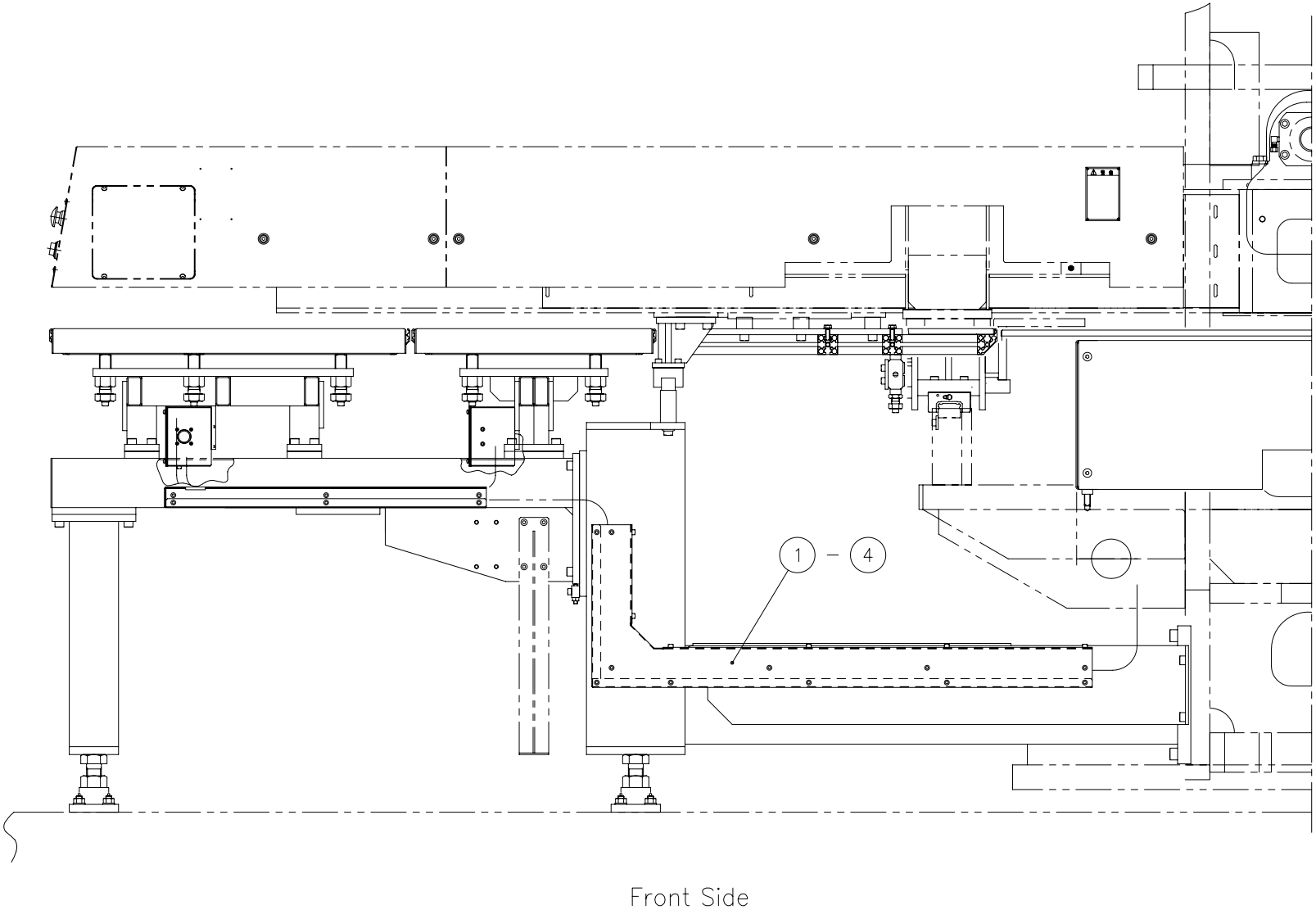
1 – 4
Front Side
6871034

From Serial No.36102001 and after

Index	Code	Parts Name	Drawing No.	Type	Maker	Q'ty	Note
1	74575150	Duct (L)	6823854			1	
2	79564305	Hex Soc Cap Screw	P330220006	M6X15		5	
3	74575235	Duct Cover (L)	6823857			1	
4	79564305	Hex Soc Cap Screw	P330220006	M6X15		12	

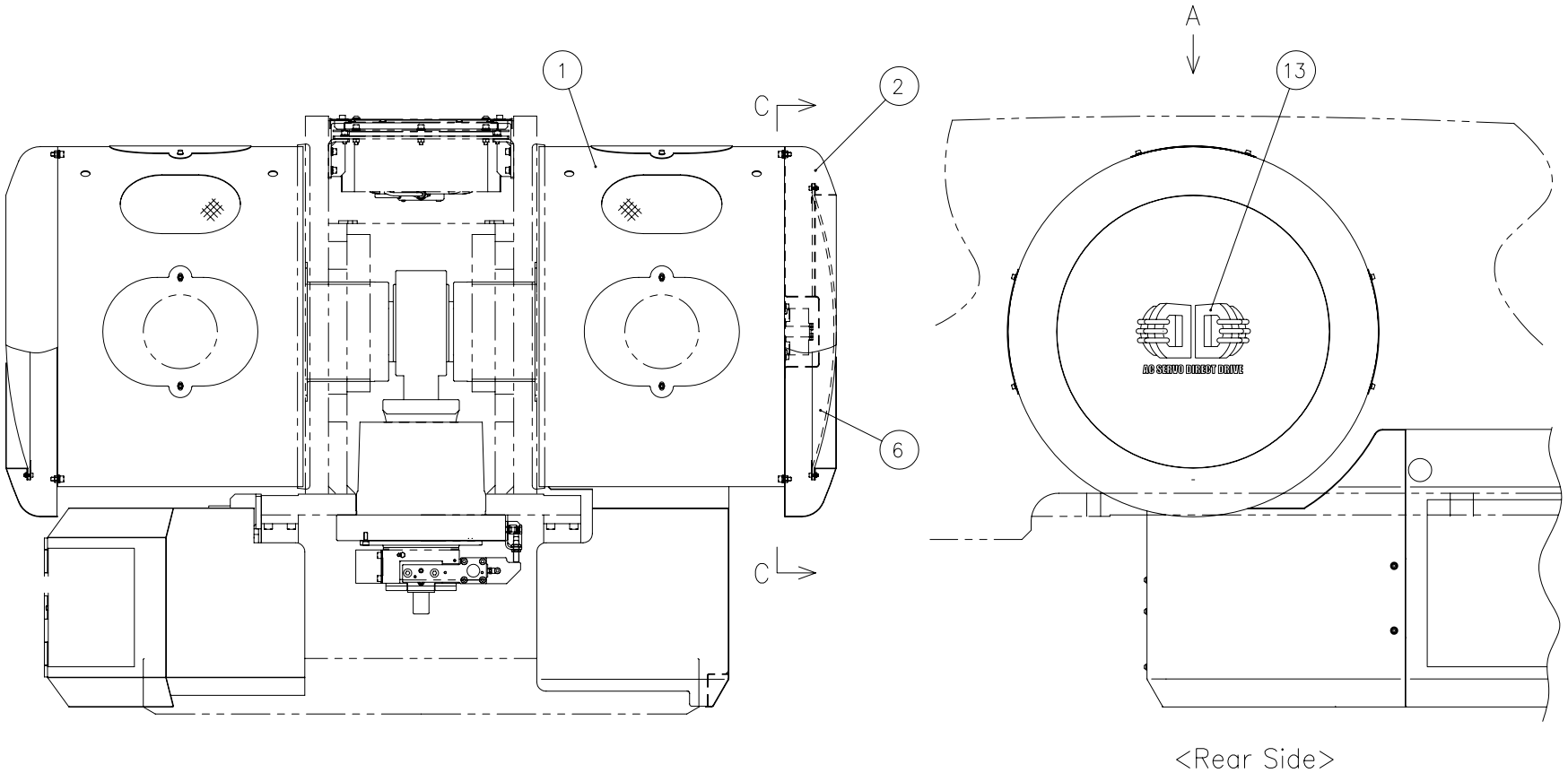

6876446
(6879410)

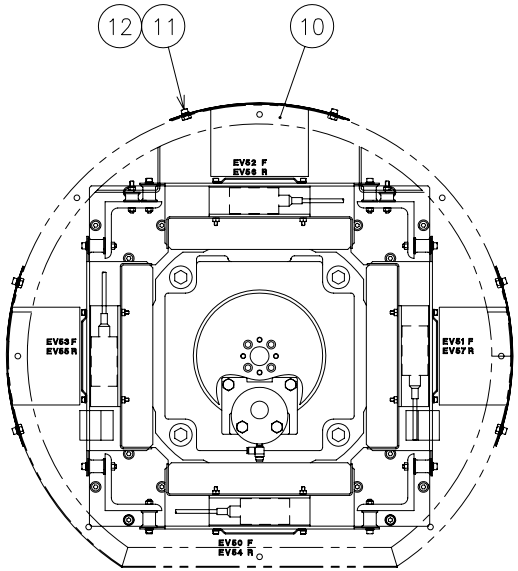

SECTION B–B

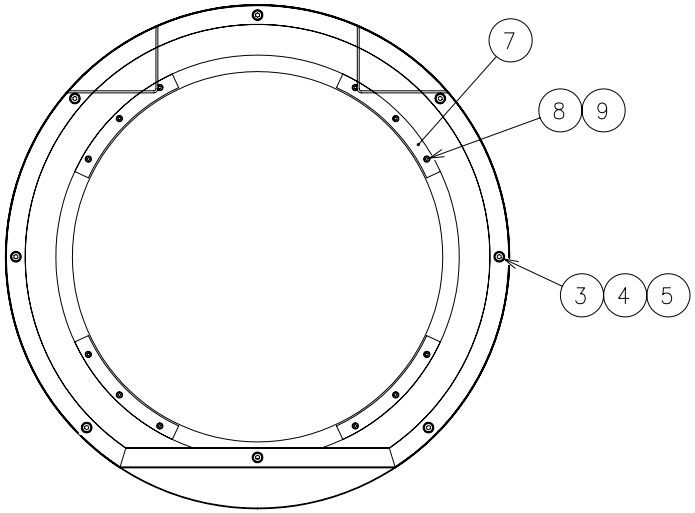

SECTION C–C

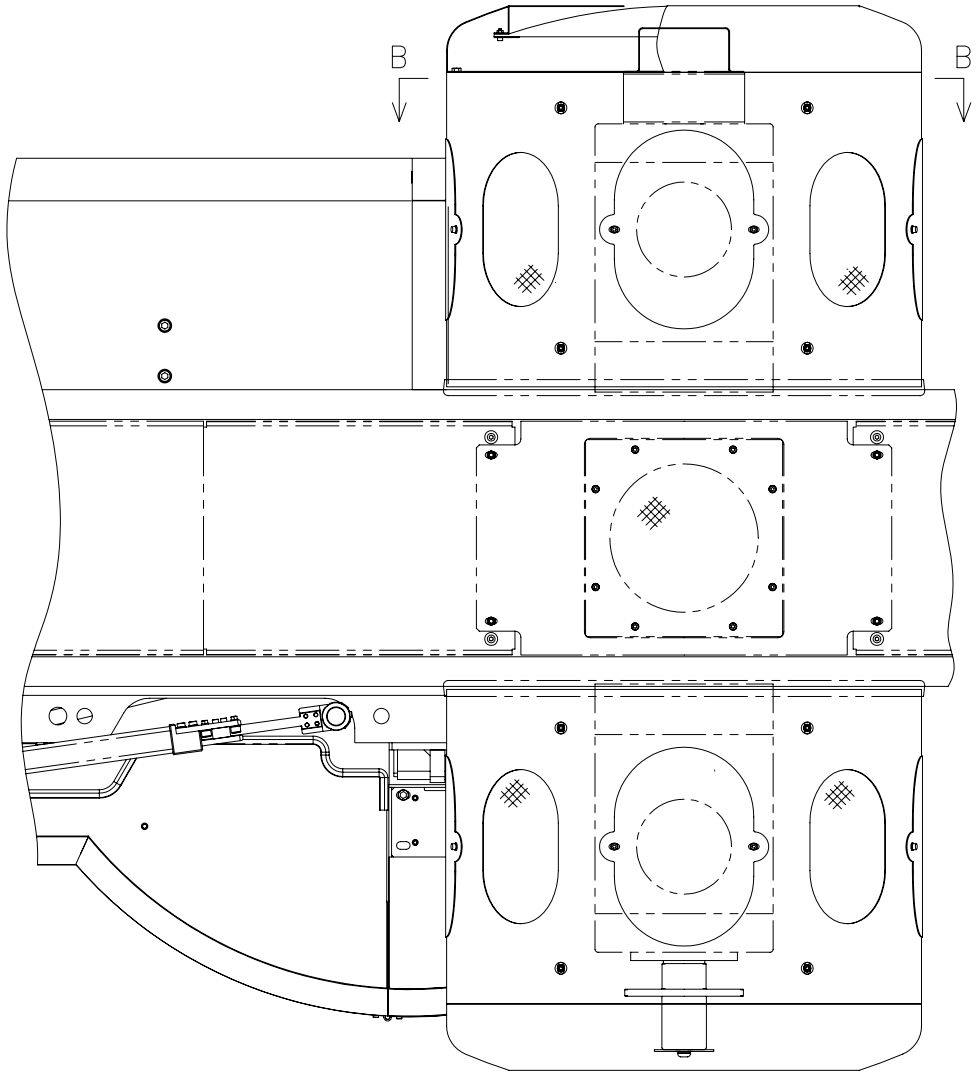

VIEW A

6876446
(6879410)

Index	Code	Parts Name	Drawing No.	Type	Maker	Q'ty	Note
1	74419183	Drive Cover (Cylindrical) R	6876454 A			1	
2	74415356	Drive Cover (Cap)	6828452			1	
3	79564804	Hex Soc Cap Screw	P330230006	M8X20		5	
4	86610326	Spring Washer	P336050006	8		5	
5	79567109	Washer	P336000006	8(Regular Round)		5	
6	74415344	Drive Cover (Window)	6828453			1	
7	74415351	Window Support	6828454			4	
8	79316109	Hex Soc Cap Screw	P330210006	M5X15		12	
9	31182981	Washer	P336000080	5(Regular Round)		12	
10	74415918	Maintenance Cap (Drive Cover)	6829173			3	
11	79565201	Hex Soc Cap Screw	P330220004	M6X12		6	
12	79565419	Washer	P336000005	6(Regular Round)		6	
13	74417167	DD Mark 250	6170100			1	

<List Only>

6703029	FANUC (RMP)	1 - 5

6703029

Unit No. 212

RMP-C(17) From Serial No.36102001 and after

Index	Code	Parts Name	Drawing No.	Type	Maker	Q'ty	Note
1	71590251	Device-Net Interface Board	P767478049	A02B-0281-J307	FANUC	1	
2	71516927	Device-Net Control Software	P767485521	A02B-0236-J564#6571	FANUC	1	
3	74417305	Device-Net Application Software	P767485522	A02B-0236-J565#6576	FANUC	1	
4	71516690	Accessory (Program Controller)	P767485352	A02B-0282-S723	FANUC	1	
5	71516687	Accessory (Program Controller)	P767485353	A02B-0259-K211	FANUC	1	

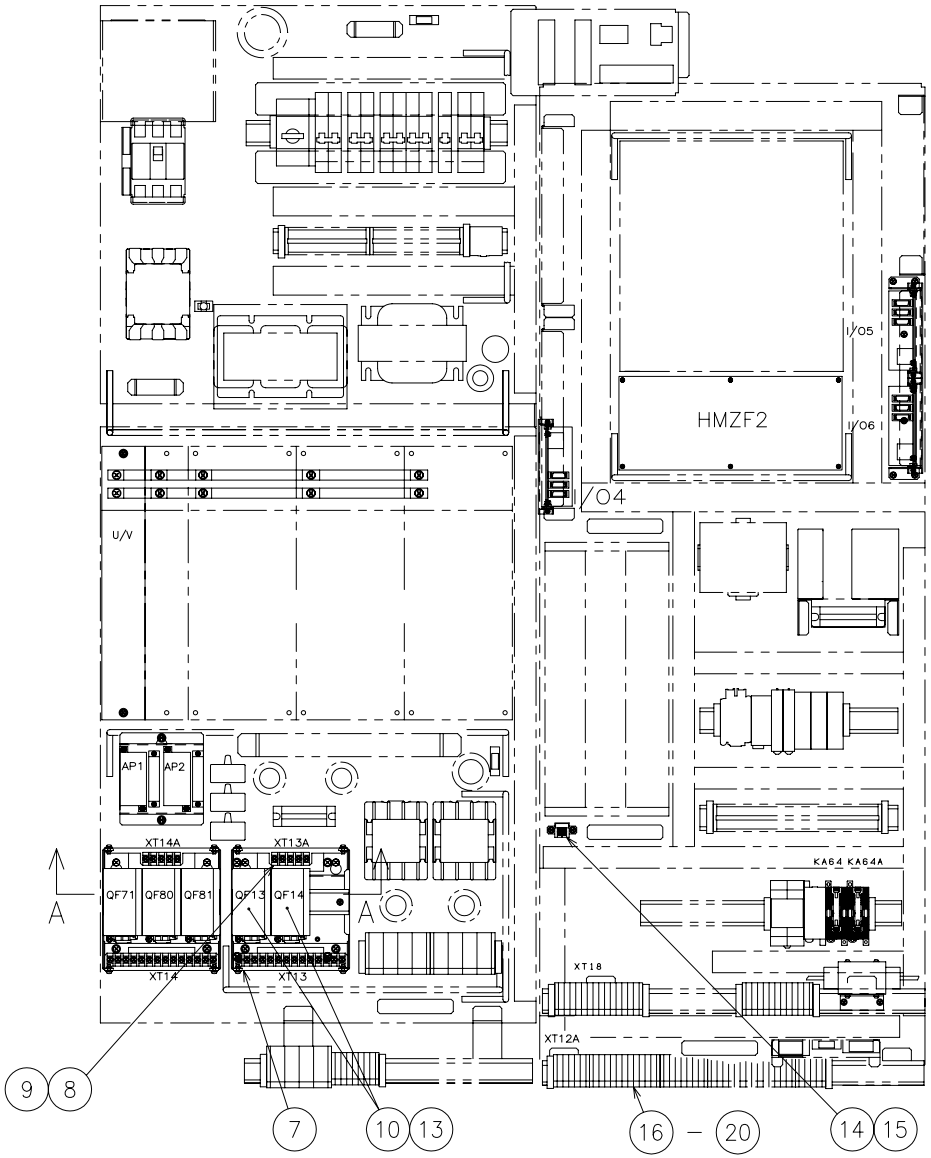

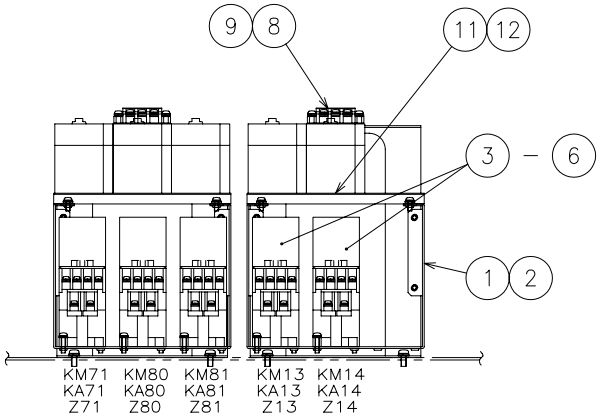

SECTION A–A

6707945
(6701376#1)

From Serial No.36102001 and after

Index	Code	Parts Name	Drawing No.	Type	Maker	Q'ty	Note
1	74416362	OP Chassis 1 (EMFE)	6705415			1	
2	74577525	Pan Head Screw with Washer	P334200183	M4X10(Chromate P-3)		8	
3	74572132	Electro-Magnetic Contactor	P810004046	SC-03/T-AC100V	FUJI Electric	2	KM13,14
4	74417689	Pan Head Screw with Washer	P334200176	M4X16(Chromate P-4)		4	
5	74417799	Accessory(Electro-Magnetic SW)	P810184012	SZ-ZM1	FUJI Electric	2	Z13,14
6	45253279	Coil Driving Relay	P810184009	SZ-CD1	FUJI Electric	2	KA13,14
7	74416365	Block Terminal	P864008065	OGM-300NE-B-12P-C-M4	OSADA	1	XT13
8	74419088	Block Terminal	P864008265	OGM-300-M-3P-C-M4	OSADA	1	XT13A
9	74417689	Pan Head Screw with Washer	P334200176	M4X16(Chromate P-4)		4	
10	71513742	Low Voltage Breaker	P812048027	PKZM0-2.5+NHI11	MURA Electric	2	QF13,14
11	74419467	Terminal Base		DAV4(L=162.5)	TOYO GIKEN	1	
12	74577525	Pan Head Screw with Washer	P334200183	M4X10(Chromate P-3)		4	
13	74419089	WP130	670285330			1	
14	71516682	Accessory (Program Controller)	P767482031	DRS1-T	OMRON	1	R
15	74577525	Pan Head Screw with Washer	P334200183	M4X10(Chromate P-3)		2	
16	75428211	Block Terminal	P864002026	BN15MW	IDEC	5	XT12A
17	31182112	Terminal Parts	P864052019	BNE15W	IDEC	2	(XT12A)
18	74417298	Terminal Label	P864072117	BNM7(40)	IDEC	1	(XT12A)
19	74417299	Terminal Cover	P864062117	BNC230(50)	IDEC	1	(XT12A)

From Serial No.36102001 and after

Index	Code	Parts Name	Drawing No.	Type	Maker	Q'ty	Note
20	74419186	WP125	670285325			1	

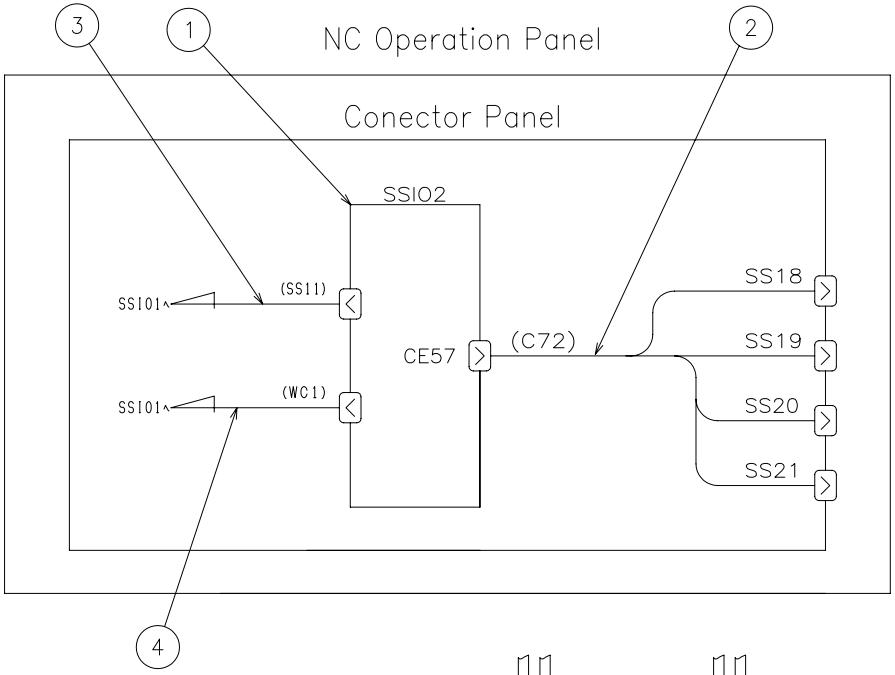

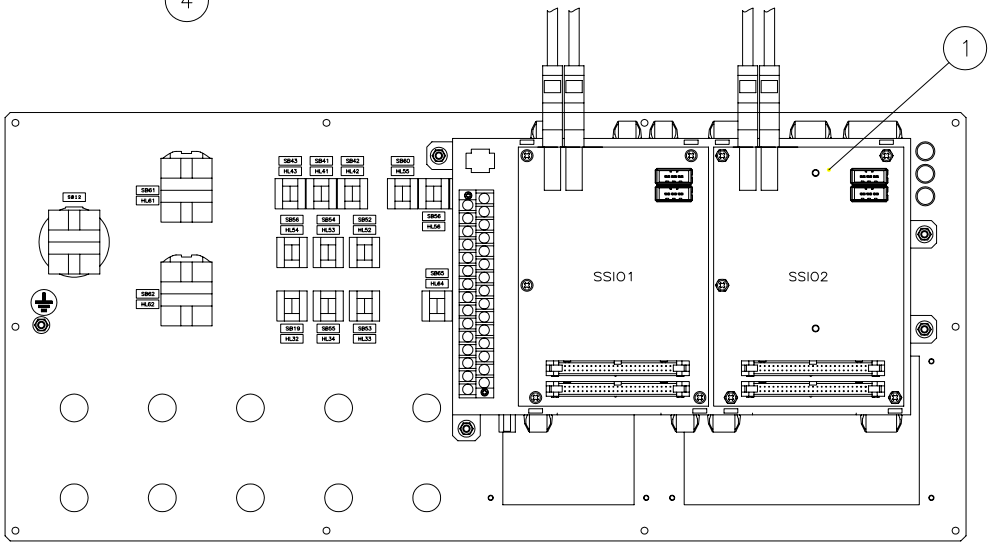

NC Operation Panel(Rear)

6703245
6703219B

Unit No. 214

RMP-C(19) From Serial No.36102001 and after

Index	Code	Parts Name	Drawing No.	Type	Maker	Q'ty	Note
1	71369424	Accessory (Program Controller)	P767485288	A20B-2002-0521	FANUC	1	SSIO2
2	74419466	Cable (C72)	670526003A			1	
3	74572012	Cable (SS11)	670246008			1	
4	74572014	Cable (WC1)	670246010			1	

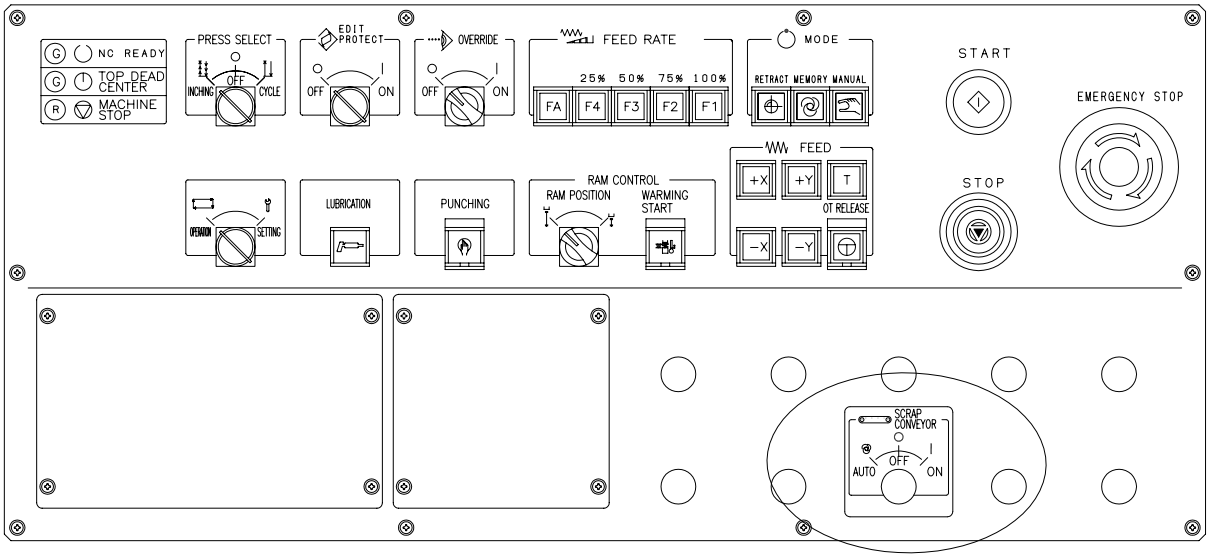

NC Operation Panel

A

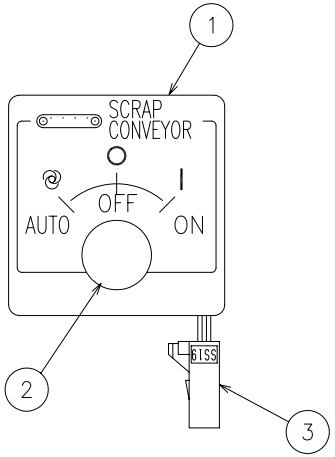

DETAIL A

6708387
(6706208A)

Unit No. 215

RMP-C(20) From Serial No.36102001 and after

Index	Code	Parts Name	Drawing No.	Type	Maker	Q'ty	Note
1	74416371	Scrap Conveyor Operation Panel	6706169 A			1	EXP
1	74416370	Scrap Conveyor Panel (CE)	6705295			1	CE
1	74419468	Scrap Conveyor Operation Panel	6701895			1	Chinese
2	74416372	Key Select Switch	P820004089	AH165-SPK3B22	FUJI Electric	1	SA10
3	74417792	Cable (SS19)	670617214A			1	

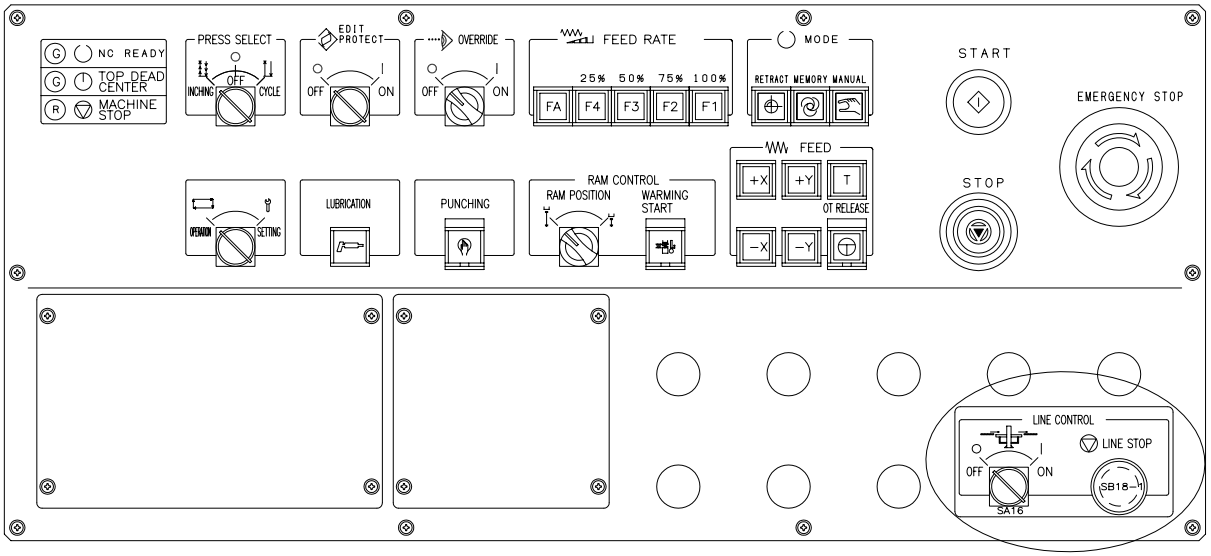

NC Operation Panel

A

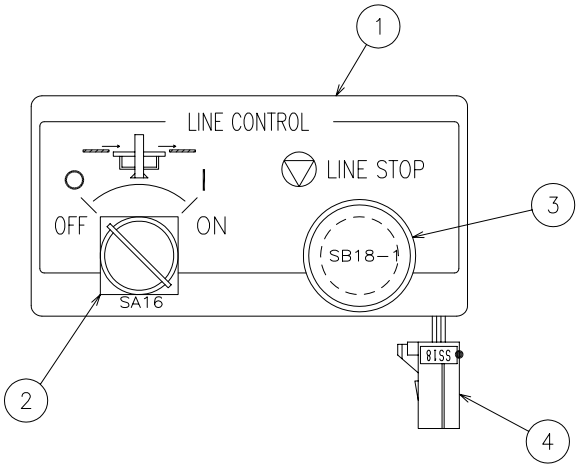

DETAIL A

6707946
(6703222)

Unit No. 216

RMP-C(21) From Serial No.36102001 and after

Index	Code	Parts Name	Drawing No.	Type	Maker	Q'ty	Note
1	74416381	Line Operation Panel	6706161 A			1	
2	74577659	Key Select Switch	P820014159	AH165-SJ2B11A	FUJI Electric	1	SA16
3	74418013	Push Switch	P821104021	AH165-M5B11	FUJI Electric	1	SB18-1
4	74417788	Cable (SS18)	670617213A			1	

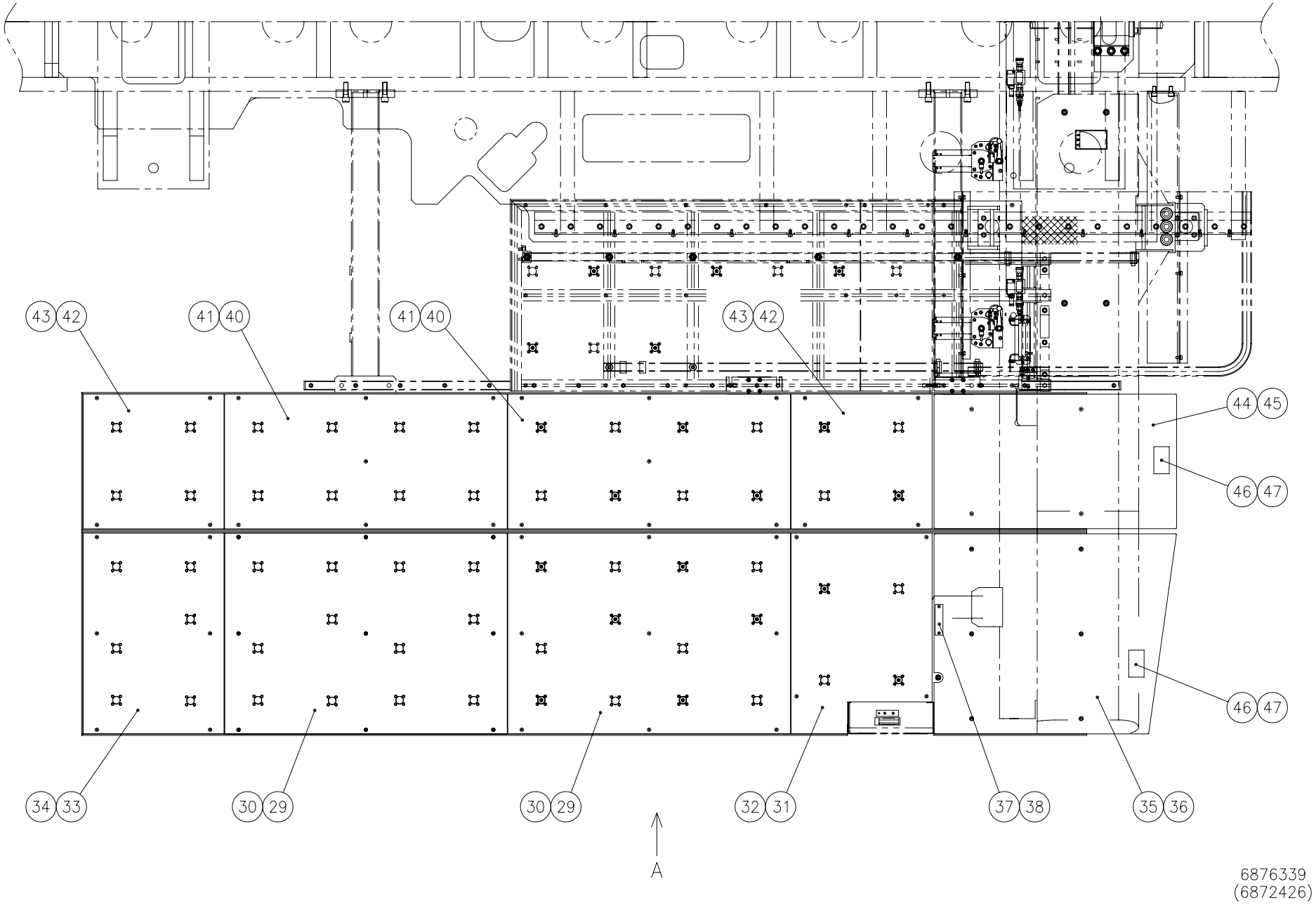
43 42
41 40
41 40
43 42
44 45
46 47
46 47
34 33
30 29
30 29
32 31
37 38
35 36
A
6876339
(6872426)

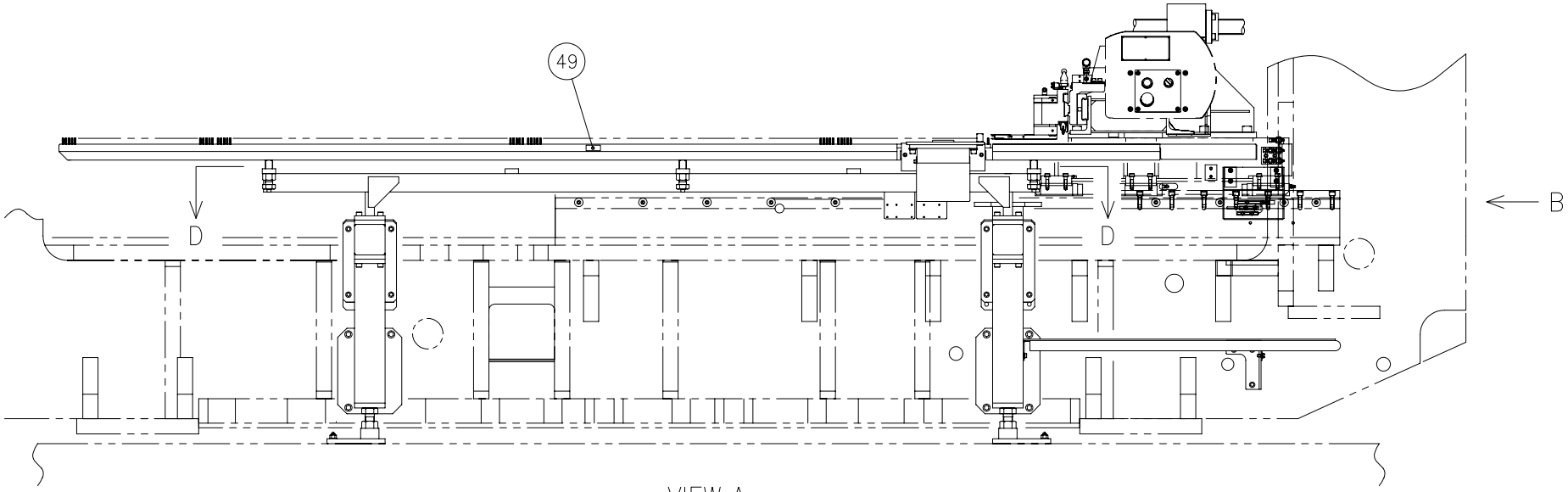

VIEW A

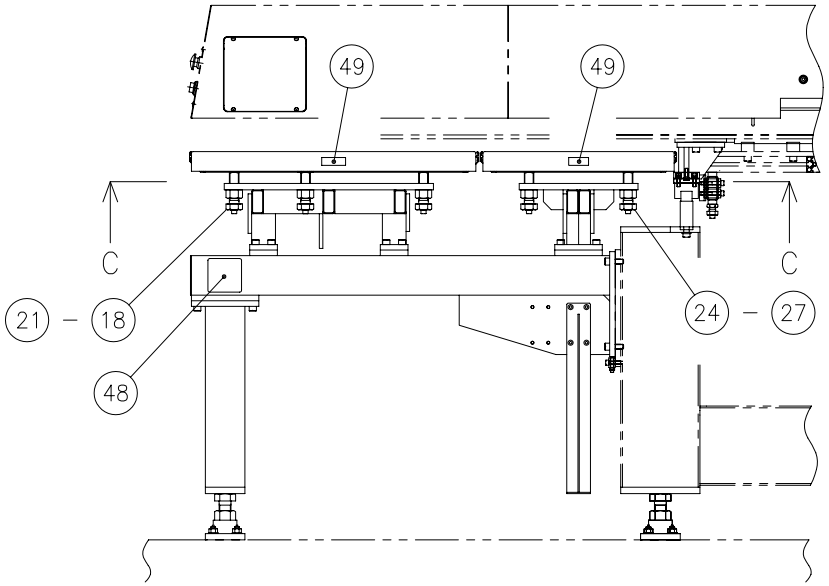

VIEW B

6876339
(6872426)

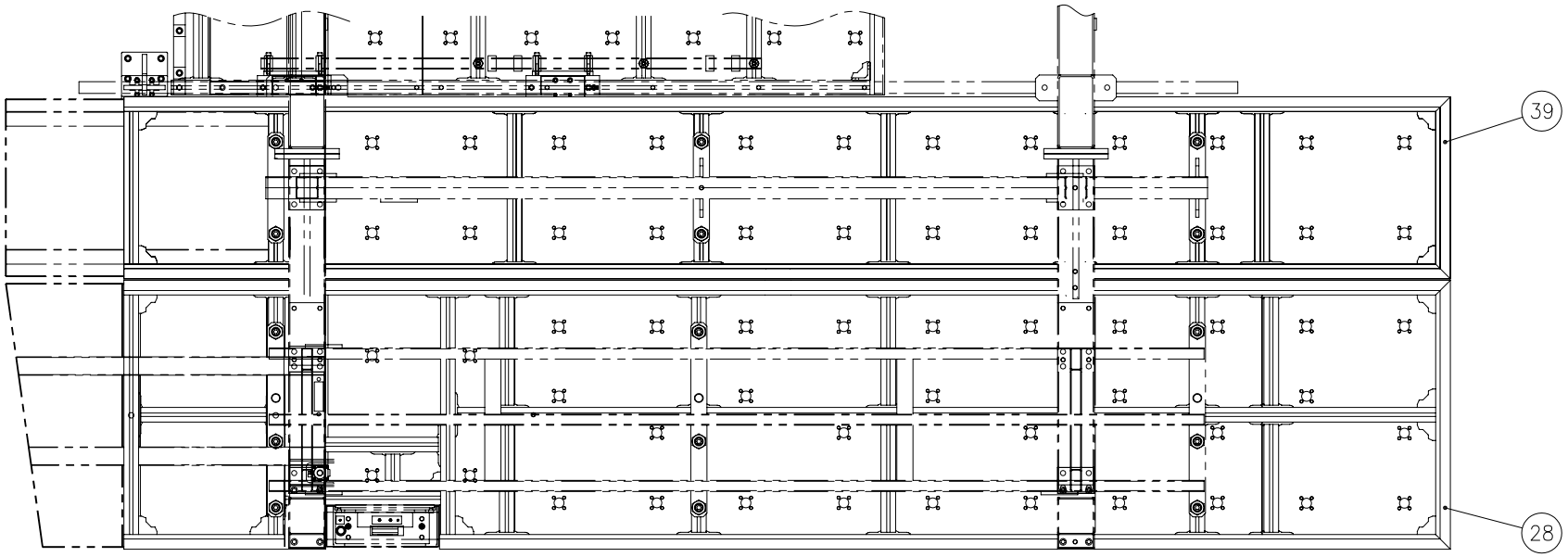

SECTION C–C

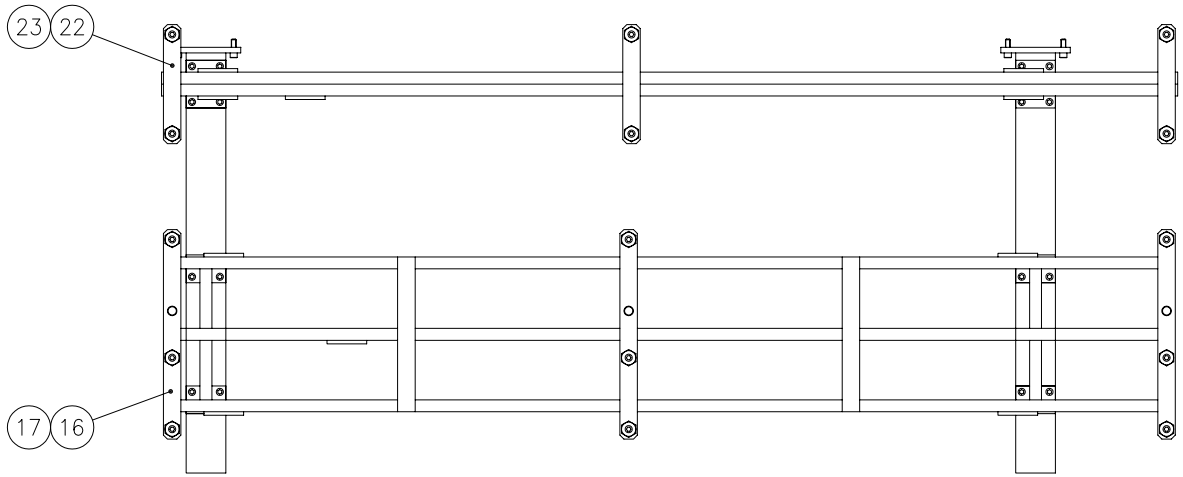

SECTION D–D

6876339
(6872426)

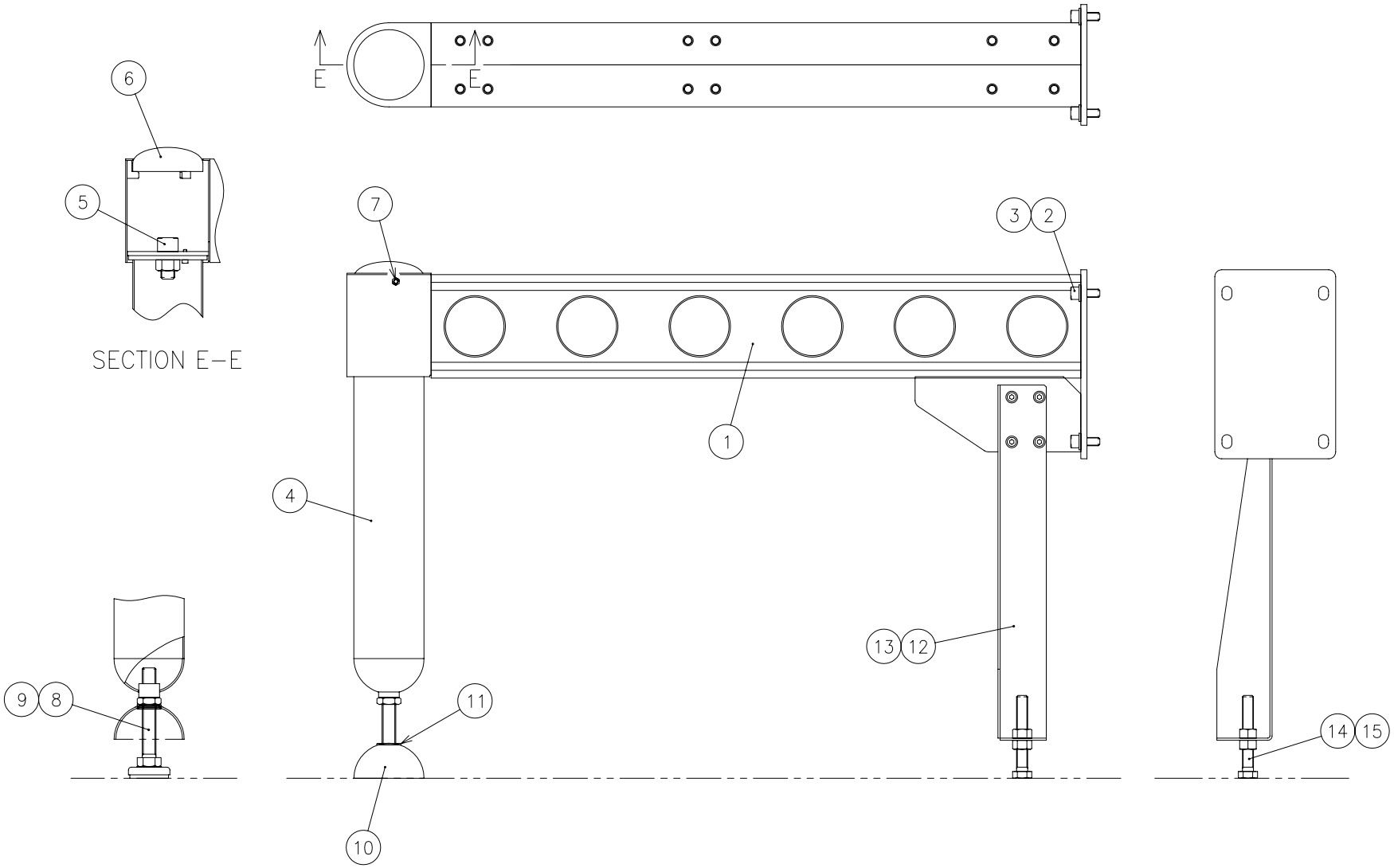

6879685

Index	Code	Parts Name	Drawing No.	Type	Maker	Q'ty	Note
1	74419472	Side Table Base (R)	380787100A			1	
2	36367655	Hex Soc Cap Screw	P330250005	M12X30		4	
3	86613931	Washer	P336000008	12(Regular Round)		4	
4	74419473	Stand	6879686			1	
5	36320521	Hex Soc Cap Screw	P330270003	M20X40		1	
6	74419474	Cap	6879678			1	
7	86620204	Socket Set Screw	P330590019	M6X10(Cup-end)		1	
8	74570064	Level Adjuster	P384022021	KC-280-0	TAKIGEN	1	
9	10380040	Nut	P332000023	M20(Thin)		1	
10	74419475	Level Adjuster Cover	3807879			1	
11	31100028	Bush For Cable	P229112053	C-30-NG-79-Q	TAKIGEN	1	
12	74419476	Shipping Bracket	3807874 A			1	
13	75420815	Flange Socket Bolt	P330468001	M8X20	NISSAN NEJI	4	
14	36163072	Bolt	P330060076	M16X120(All-thread)		1	
15	86611630	Nut	P332000066	M16(Type-1)		1	
16	74578812	Side Table Frame (1)	6823892 A			1	
17	36110743	Hex Soc Cap Screw	P330250006	M12X35		16	
18	74569742	Jack Screw	6821834			9	
19	71371592	Nut	P332000011	M24		9	

Index	Code	Parts Name	Drawing No.	Type	Maker	Q'ty	Note
20	79316161	Hex Soc Cap Screw	P330230024	M8X110		9	
21	79567109	Washer	P336000006	8(Regular Round)		9	
22	74578813	Side Table Frame (2)	6823893 A			1	
23	36110743	Hex Soc Cap Screw	P330250006	M12X35		8	
24	74569742	Jack Screw	6821834			6	
25	71371592	Nut	P332000011	M24		6	
26	79316161	Hex Soc Cap Screw	P330230024	M8X110		6	
27	79567109	Washer	P336000006	8(Regular Round)		6	
28	74419477	Fixed Table (F) A	7830940 A		NIC	1	
29	74571312	MDF Brush (K-4)	6823663 A			2	
30	74722756	Button Head Screw	P334500021	M8X25		18	
31	74571269	MDF Brush (K-5)	6821845 B			1	
32	74722756	Button Head Screw	P334500021	M8X25		4	
33	74571270	MDF Brush (K-8)	6823665 A			1	
34	74722756	Button Head Screw	P334500021	M8X25		6	
35	74418378	Cover Table (F-1)	6823013 B			1	
36	79565423	Hex Soc Cap Screw	P330230004	M8X15		6	
37	74569764	Maintenance Cover	6812712			1	
38	31179660	Button Head Screw	P334500009	M5X10		2	

Index	Code	Parts Name	Drawing No.	Type	Maker	Q'ty	Note
39	74578815	Fixed Table (F) B	7830865		NIC	1	
40	74415176	MDF Brush (K-1)	6823635			2	3.2mm
40	74575212	MDF Brush (K-1)	6823846			2	4.5mm
41	74722756	Button Head Screw	P334500021	M8X25		14	
42	74415177	MDF Brush (K-3)	6823636			2	3.2mm
42	74575185	MDF Brush (K-3)	6823847			2	4.5mm
43	74722756	Button Head Screw	P334500021	M8X25		8	
44	74415449	Cover Table (F-2)	6823844 A			1	
45	79565423	Hex Soc Cap Screw	P330230004	M8X15		4	
46	71362136	Legend Plate (Warning)(3)	6045924			2	English
46	71362135	Legend Plate (Warning)(3) FRA	6045078			2	French
46	71362137	Legend Plate (Warning)(3) GER	6046718			2	German
46	71362138	Legend Plate (Warning)(3) ITA	6046728			2	Italian
46	74415924	Legend Plate (Warning)(3)	6816795			2	Chinese
47	74326603	Blind Rivet	P339208001	NTA3-2	LOBTEX	8	
48	74419480	Legend Plate (Caution) E	3809322	(DO NOT LIFT HERE)		2	English
48	74419481	Legend Plate (Caution) F	3809323			2	French
48	74419479	Legend Plate (Caution) G	3809321			2	German
48	74419482	Legend Plate (Caution) I	3809324			2	Italian

From Serial No.36102001 and after

Index	Code	Parts Name	Drawing No.	Type	Maker	Q'ty	Note
48	74419478	Legend Plate (Caution) C	3809319			2	Chinese
49	71130447	Legend Plate (Do Not Get On)	0840546			5	
50	74417405	Sticker (Fixed Table)(Export)	6871975			1	List Only
51	74419483	Adhesive Tape	P379108025	FE-6061 (20mm)	FANTAC	5	1M (List Only)

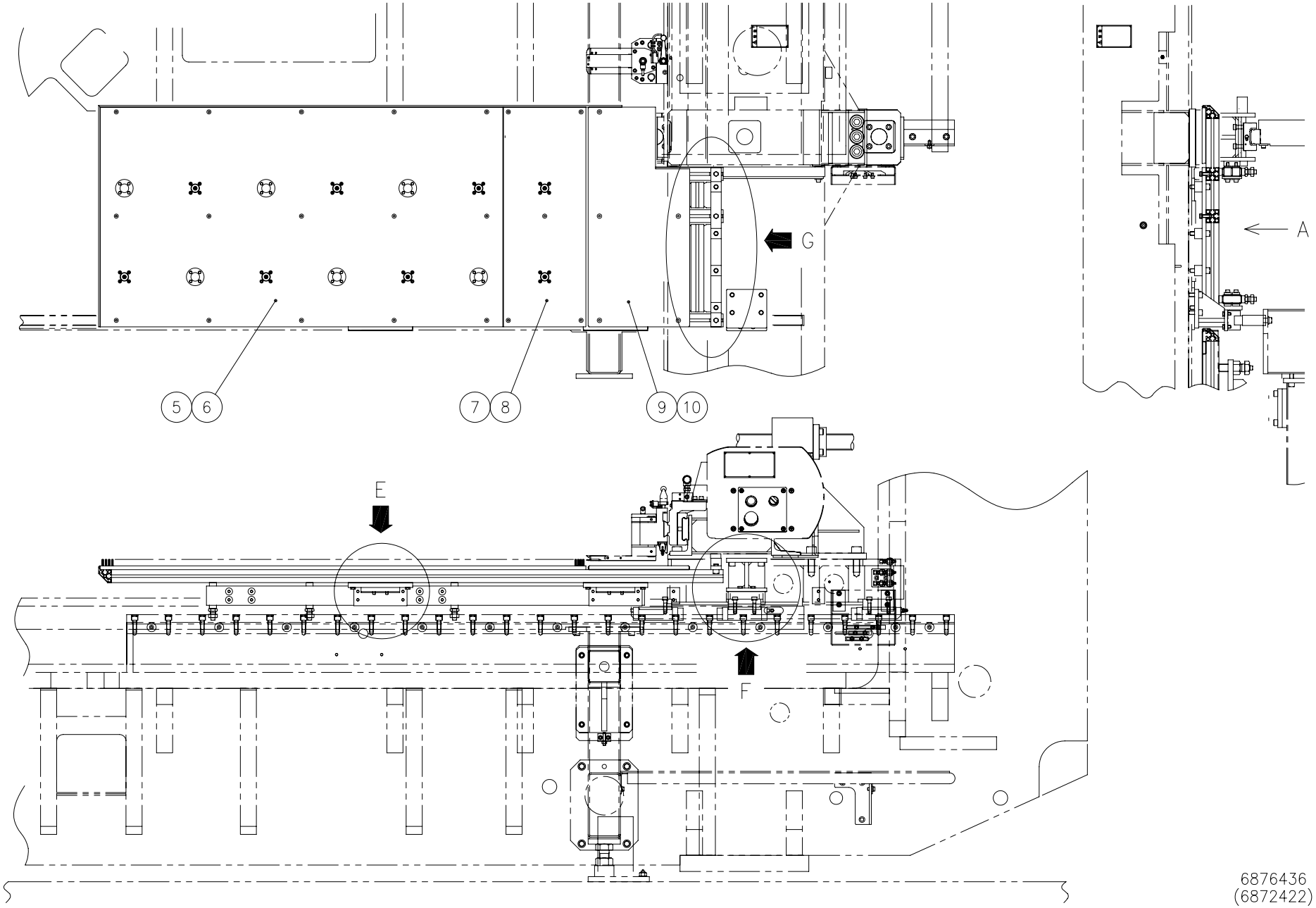
G
A
5
6
7
8
9
10
E
F
6876436
(6872422)

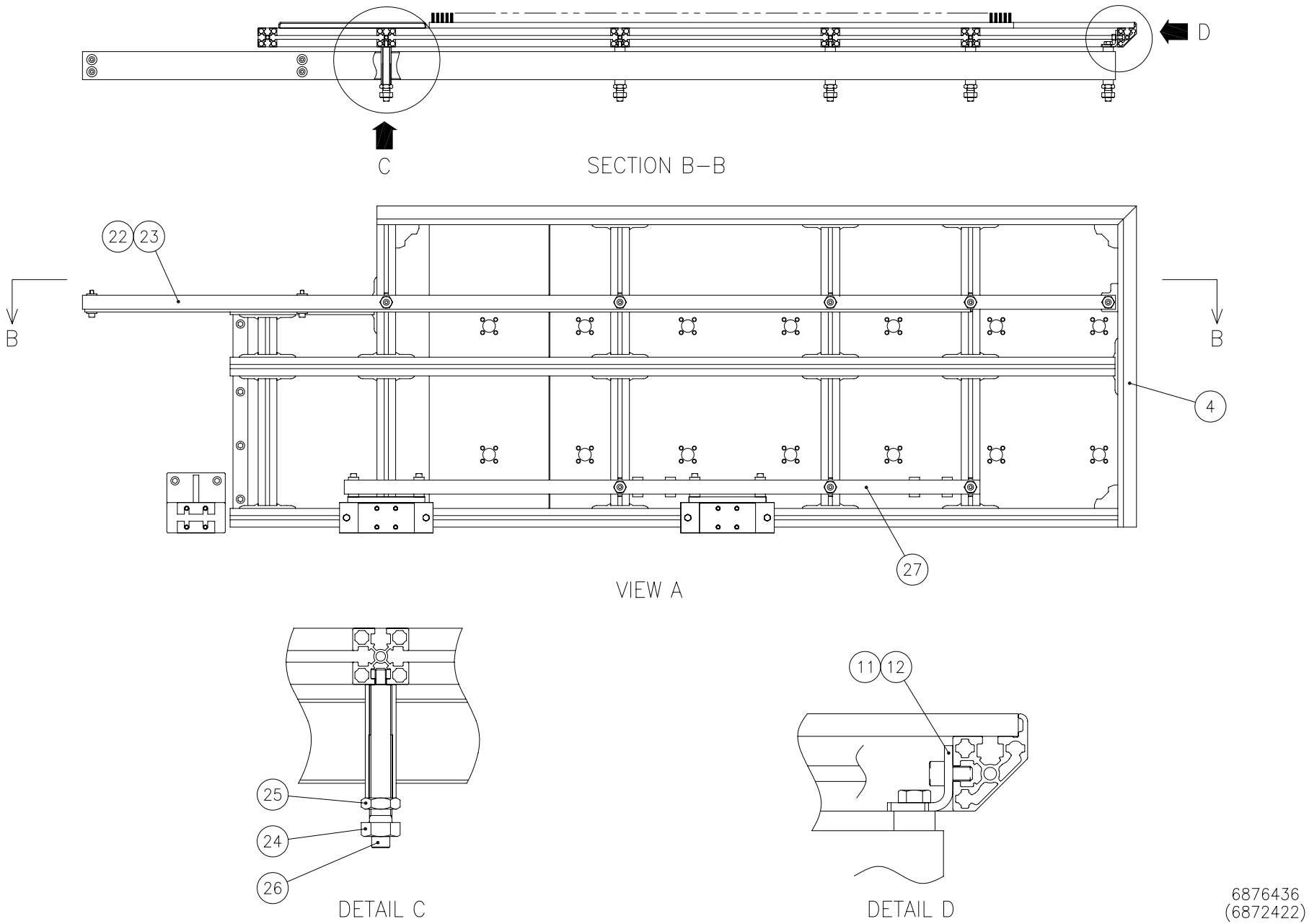
D
C
SECTION B–B
22
23
B
B
4
27
VIEW A
25
24
26
DETAIL C
11
12
DETAIL D
6876436
(6872422)

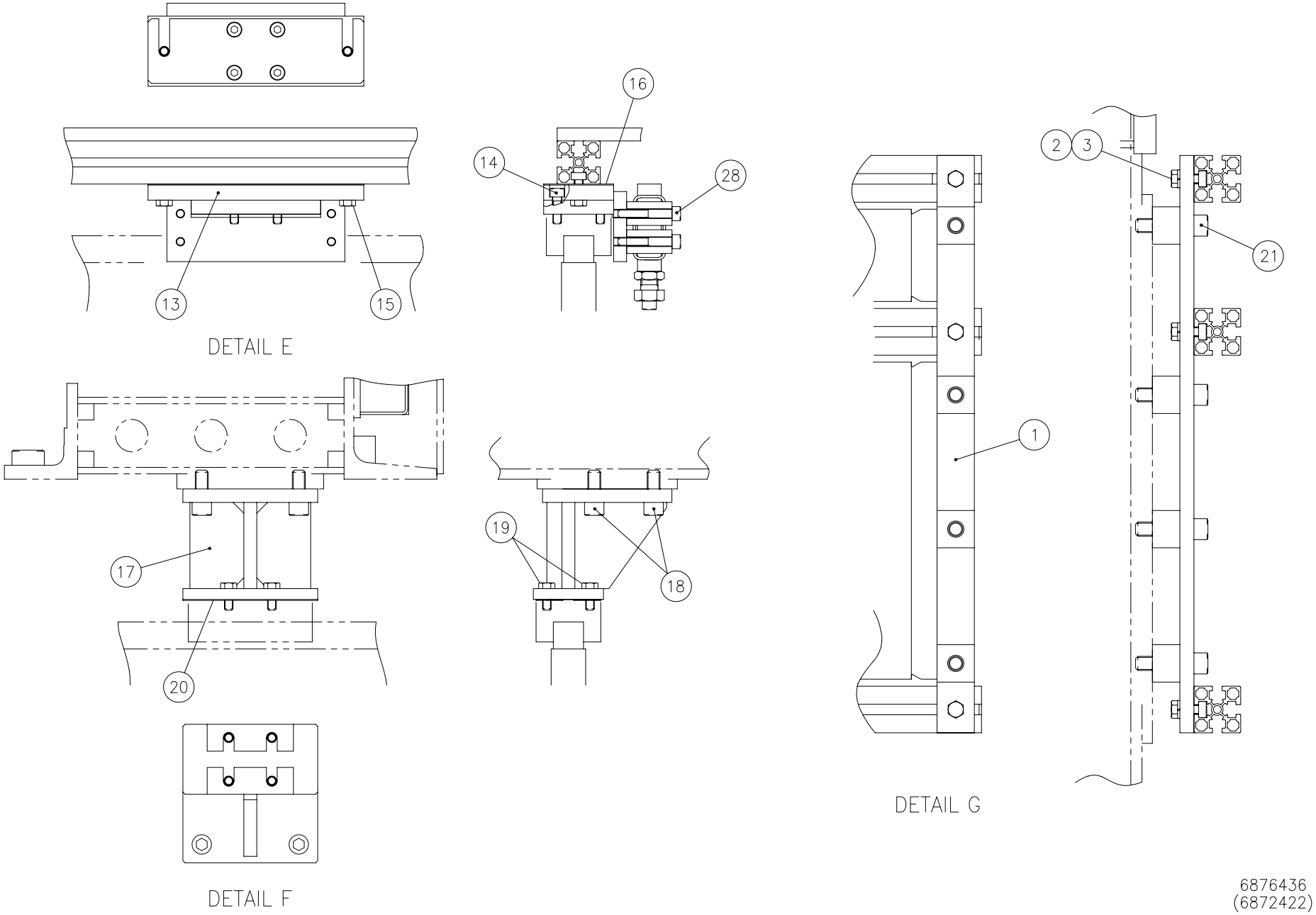
16
14
28
13
15
DETAIL E
2
3
21
1
17
19
18
20
DETAIL G
DETAIL F
6876436
(6872422)

Index	Code	Parts Name	Drawing No.	Type	Maker	Q'ty	Note
1	74415465	Table Spacer	6828647			1	
2	74183005	Bolt	P330030007	M8X25		3	
3	86610326	Spring Washer	P336050006	8		3	
4	74418375	Moving Table (F)	7830942		NIC	1	
5	74415175	MDF Brush (I-1)	6823682			1	3.2mm
5	74571284	MDF Brush (I-1)	6823627 A			1	4.5mm
6	74722756	Button Head Screw	P334500021	M8X25		15	
7	74578826	MDF Brush (I-2)	6823683			1	3.2mm
7	74571327	MDF Brush (I-2)	6823628 A			1	4.5mm
8	74722756	Button Head Screw	P334500021	M8X25		5	
9	74415444	Cover Table (S-F)	6828649			1	
10	79565423	Hex Soc Cap Screw	P330230004	M8X15		5	
11	74415467	Angle	6828651 A			1	
12	79565423	Hex Soc Cap Screw	P330230004	M8X15		2	
13	74418396	LM Support	6872480			2	
14	79566121	Hex Soc Cap Screw	P330230007	M8X25		8	
15	74183005	Bolt	P330030007	M8X25		4	
16	74571308	Shim	6823604			2	
17	74415468	Moving Table Bracket	6828648			1	

From Serial No.36102001 and after

Index	Code	Parts Name	Drawing No.	Type	Maker	Q'ty	Note
18	36367655	Hex Soc Cap Screw	P330250005	M12X30		4	
19	36176605	Bolt	P330030006	M8X20		4	
20	74571309	Shim	6826306			2	
21	79316507	Hex Soc Cap Screw	P330250009	M12X50		4	
22	74418397	Table Guide	6872436	R60X30X2.3		1	
23	10443146	Hex Soc Cap Screw	P330230012	M8X50		4	
24	74415446	Adjustable Bolt	6822812 A			8	
25	78180815	Nut	P332000022	M16(Thin)		8	
26	74707962	Hex Soc Cap Screw	P330230026	M8X120		8	
27	74418398	Auxiliary Arm (1)	6872481	R60X30X2.3		1	
28	10443146	Hex Soc Cap Screw	P330230012	M8X50		8	

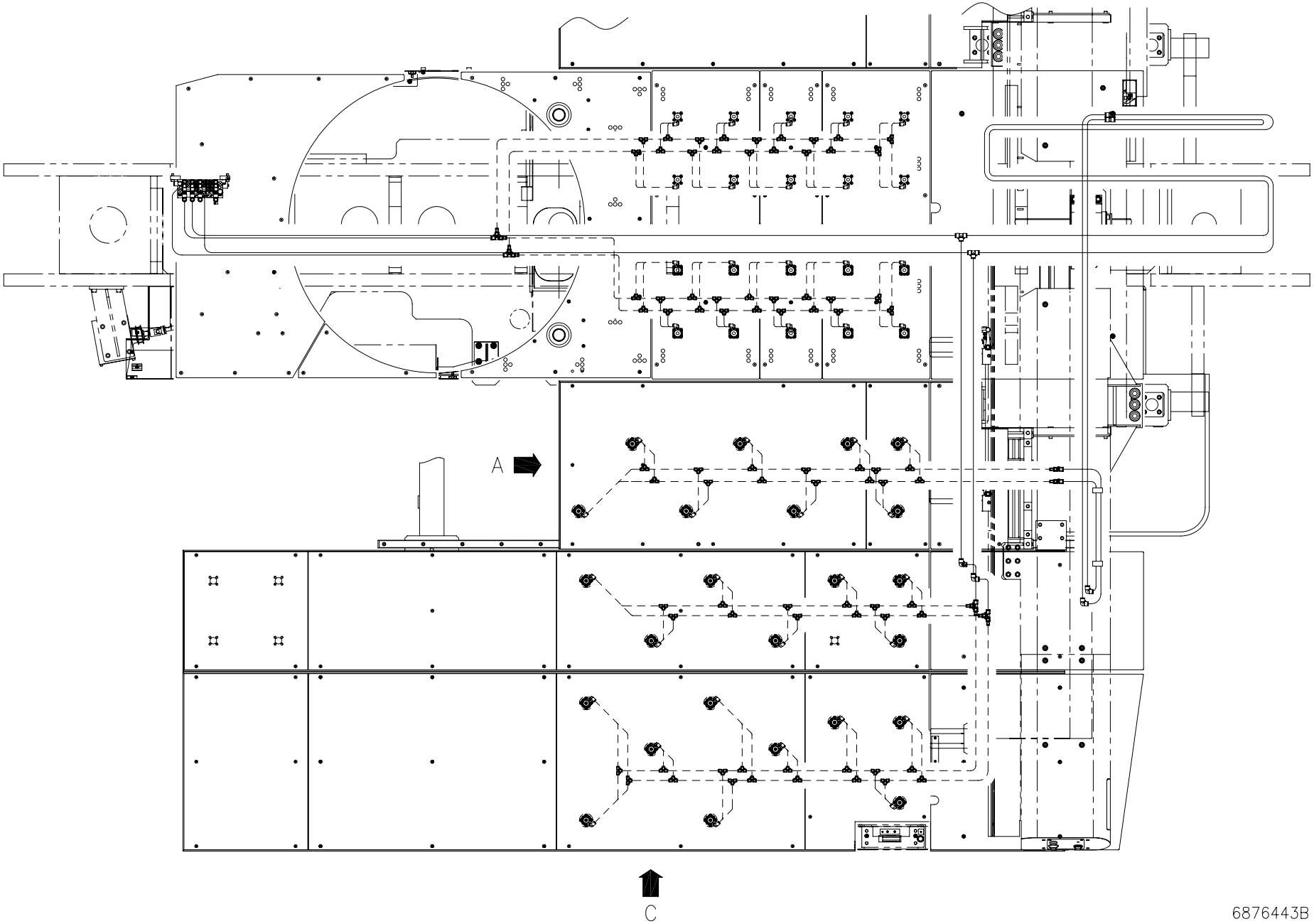
A
C
6876443B

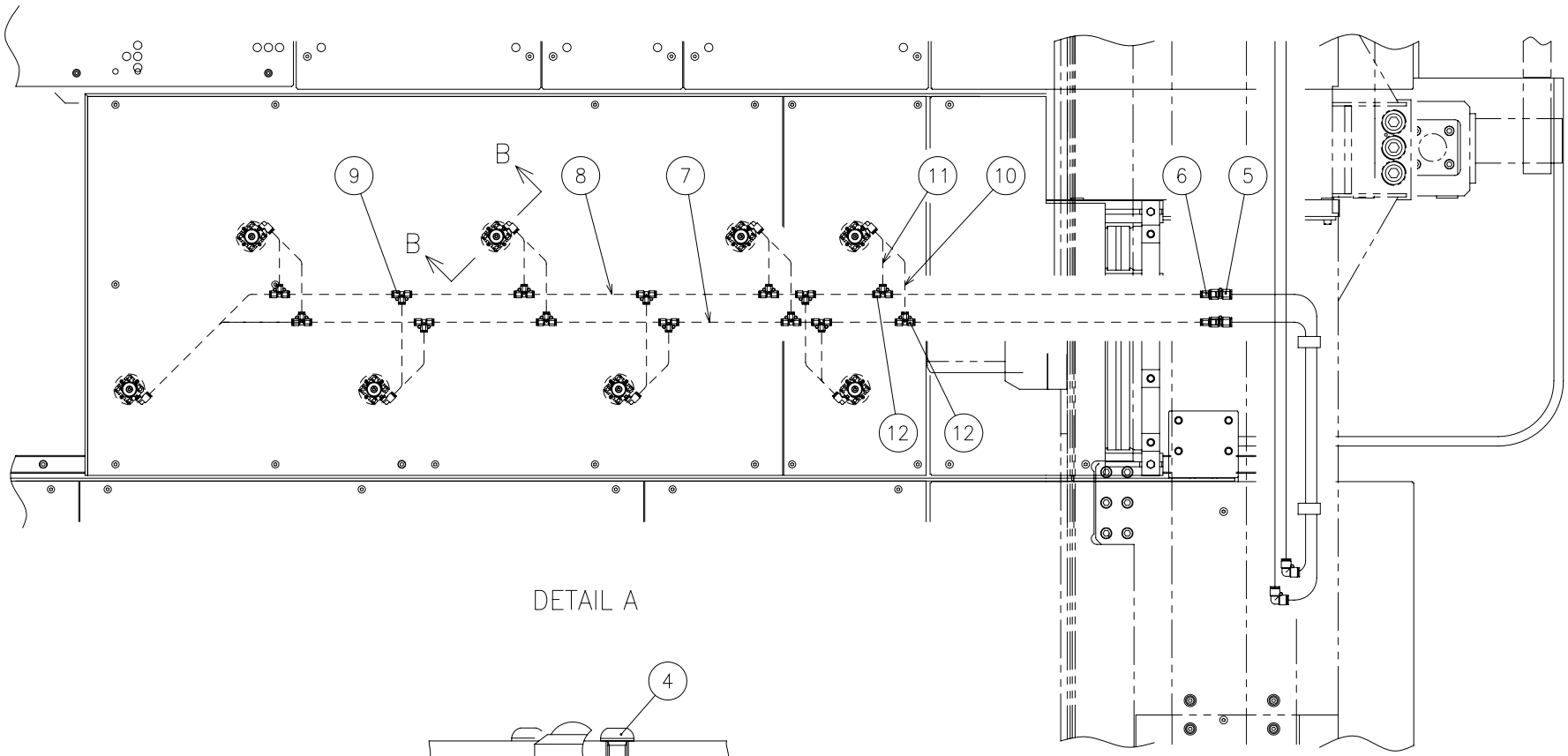

DETAIL A

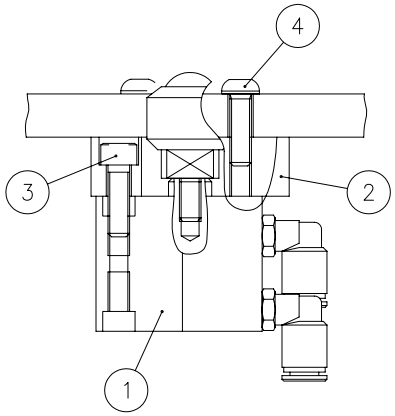

SECTION B–B (8 Sets)

6876443B

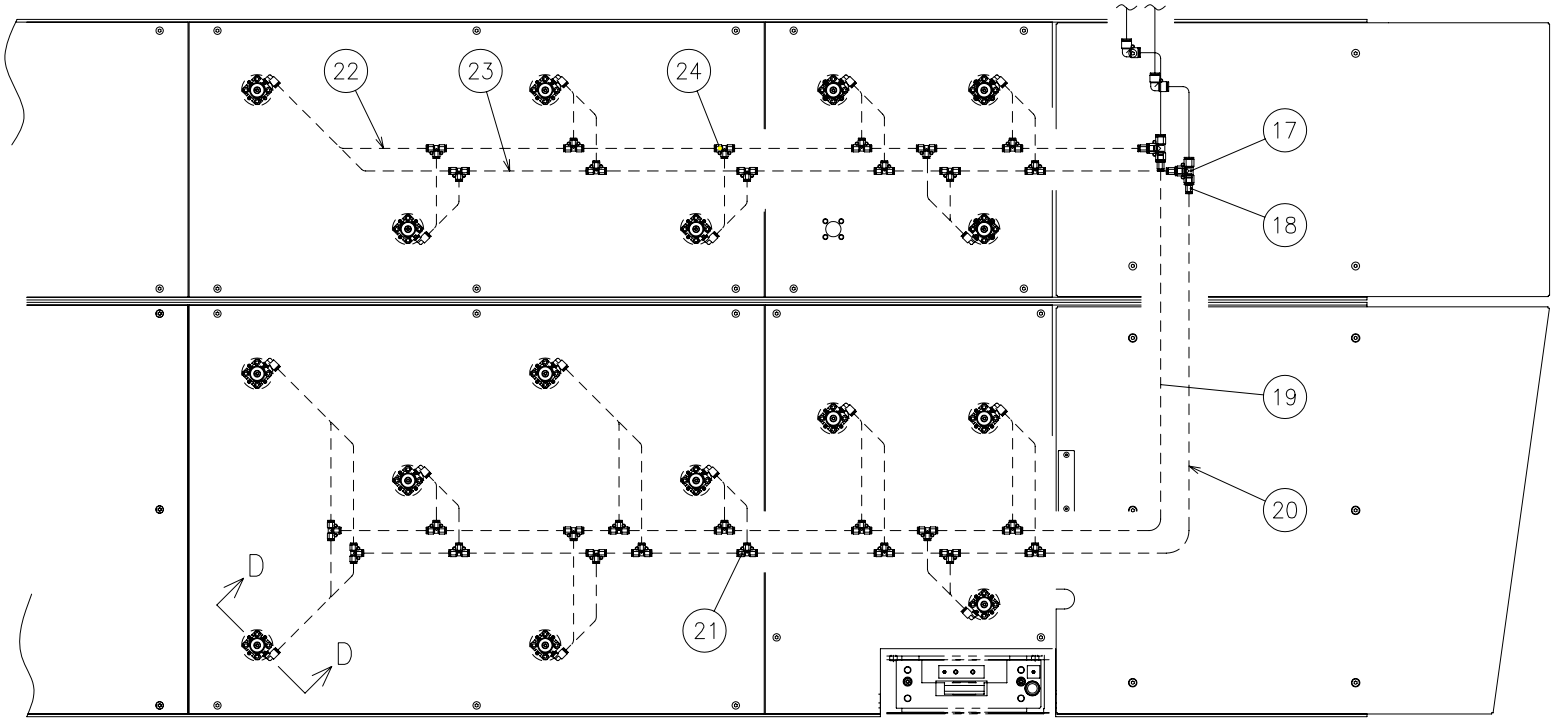

DETAIL C

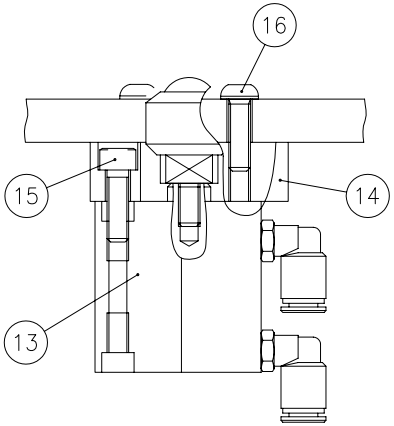

SECTION D–D (16 Sets)

6876443B

From Serial No.36102001 and after

Index	Code	Parts Name	Drawing No.	Type	Maker	Q'ty	Note
1	74568593	Cylinder	7832806 A	SSD-25-15	CKD	1	
2	74569774	Cylinder Collar	6821848			1	
3	79567722	Hex Soc Cap Screw	P330220009	M6X20		4	
4	74314603	Button Head Screw	P334500016	M6X20		4	
5	74565147	Instant Fitting	P586604021	EUC10	NITTA MOORE	2	
6	74562784	Instant Fitting	P586654002	ER6-10	NITTA MOORE	2	
7	74415492	Plastic Hose	P230222148	N2-4-6X4(Blue)-10M	NITTA MOORE	1	
8	74415488	Plastic Hose	P230222149	N2-4-6X4(Red)-10M	NITTA MOORE	1	
9	74338327	Instant Fitting	P586604012	EUT6	NITTA MOORE	12	
10	74415492	Plastic Hose	P230222157	N2-4-6X4(Blue)-1M	NITTA MOORE	1	
11	74415488	Plastic Hose	P230222158	N2-4-6X4(Red)-1M	NITTA MOORE	1	
12	74338327	Instant Fitting	P586604012	EUT6	NITTA MOORE	2	
13	74568610	Cylinder	7832804 A	SSD-L-25-15-T5V5-H	CKD	1	
14	74569774	Cylinder Collar	6821848			1	
15	79567722	Hex Soc Cap Screw	P330220009	M6X20		4	
16	74314603	Button Head Screw	P334500016	M6X20		4	
17	74379378	Instant Fitting	P586604013	EUT10	NITTA MOORE	2	
18	74562784	Instant Fitting	P586654002	ER6-10	NITTA MOORE	4	
19	74415492	Plastic Hose	P230222148	N2-4-6X4(Blue)-10M	NITTA MOORE	1	

From Serial No.36102001 and after

Index	Code	Parts Name	Drawing No.	Type	Maker	Q'ty	Note
20	74415488	Plastic Hose	P230222149	N2-4-6X4(Red)-10M	NITTA MOORE	1	
21	74338327	Instant Fitting	P586604012	EUT6	NITTA MOORE	16	
22	74415492	Plastic Hose	P230222148	N2-4-6X4(Blue)-10M	NITTA MOORE	1	
23	74415488	Plastic Hose	P230222149	N2-4-6X4(Red)-10M	NITTA MOORE	1	
24	74338327	Instant Fitting	P586604012	EUT6	NITTA MOORE	12	

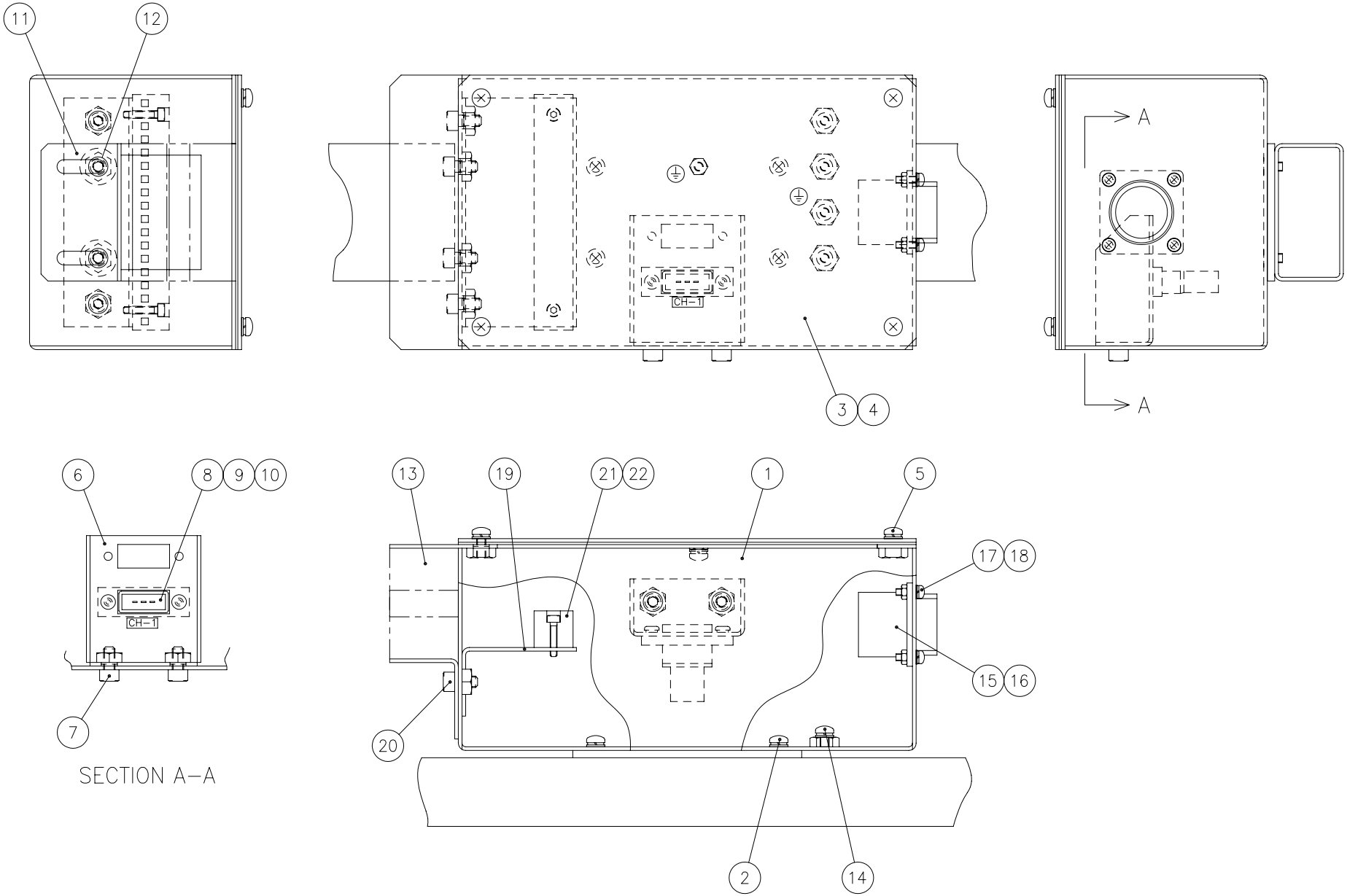
11
12
CH-1
3
4
A
A
6
8
9
10
CH-1
7
SECTION A-A
13
19
21
22
1
5
17
18
15
16
20
2
14
6824760A

Index	Code	Parts Name	Drawing No.	Type	Maker	Q'ty	Note
1	74415498	Relay Box (F)	6824761 A			1	
2	74570030	Pan Head Screw with Washer	P334200115	M4X10(Chromate P-4)		4	
3	74575225	Relay Box (F) Cover	6824762			1	
4	74575227	Packing (F)	6824763			1	
5	74570033	Pan Head Screw with Washer	P334200134	M5X10(Chromate P-4)		4	
6	74575149	Housing Plate (FC)	6826465			1	
7	79573416	Hex Soc Cap Screw	P330210003	M5X10		2	
8	74386502	Rectangle Connector	P862042073	1-178802-3	AMP	1	
9	74386503	Plug Type Terminal	P862142036	175289-5	AMP	3	
10	74386505	Accessory For Connector	P862182002	900128-2	AMP	2	
11	74387019	Cable Clamp (FC)	6596069			1	
12	79573416	Hex Soc Cap Screw	P330210003	M5X10		2	
13	74387020	Sponge Rubber	P230580063	CR-T20X20X60		2	
14	74569811	Pan Head Screw with Washer	P334200113	M4X6(Chromate P-4)		5	(Ground)
15	74521705	Plastic R Connector	P862032003	206036-1	AMP	1	
16	74384510	Plug Type Terminal	P862142020	66400-1	AMP	11	
17	74570051	Pan Head Screw with Washer	P334200109	M3X10(Chromate P-4)		4	
18	74307616	Nut	P332000001	M3		4	
19	74575145	Bracket (F)	6824764			1	

From Serial No.36102001 and after

Index	Code	Parts Name	Drawing No.	Type	Maker	Q'ty	Note
20	79573416	Hex Soc Cap Screw	P330210003	M5X10		2	
21	74569809	Block Terminal	P864008047	MK4/16KRG	WEIDMULLER	1	
22	79316101	Hex Soc Cap Screw	P330200006	M3X15		2	

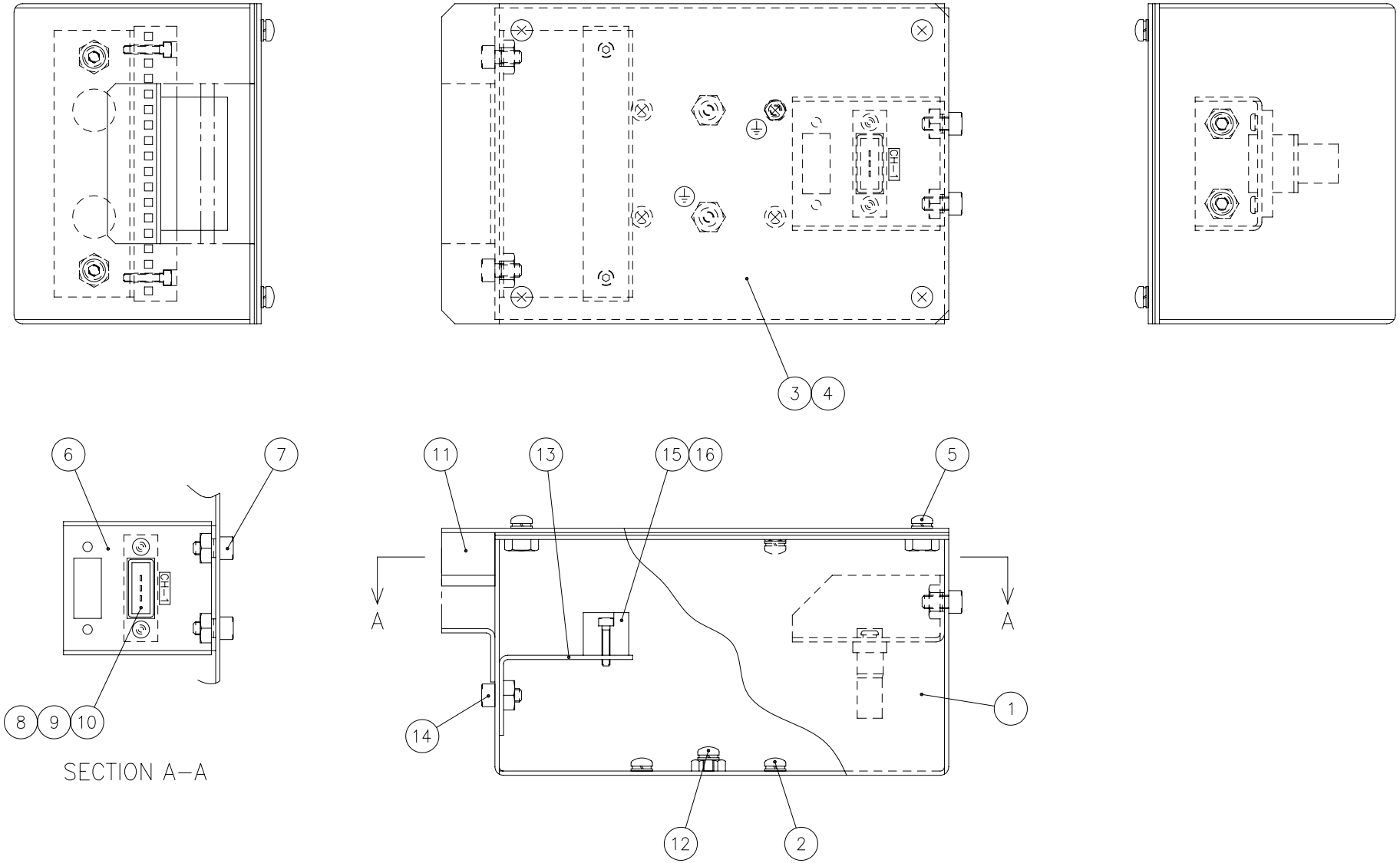

6824766

From Serial No.36102001 and after

Index	Code	Parts Name	Drawing No.	Type	Maker	Q'ty	Note
1	74575144	Relay Box (FC)	6824767			1	
2	74570030	Pan Head Screw with Washer	P334200115	M4X10(Chromate P-4)		4	
3	74575147	Relay Box (FC) Cover	6824768			1	
4	74575224	Packing (FC)	6824769			1	
5	74570033	Pan Head Screw with Washer	P334200134	M5X10(Chromate P-4)		4	
6	74575149	Housing Plate (FC)	6826465			1	
7	79573416	Hex Soc Cap Screw	P330210003	M5X10		2	
8	74386502	Rectangle Connector	P862042073	1-178802-3	AMP	1	
9	74386503	Plug Type Terminal	P862142036	175289-5	AMP	3	
10	74386505	Accessory For Connector	P862182002	900128-2	AMP	2	
11	74387020	Sponge Rubber	P230580063	CR-T20X20X60		2	
12	74569811	Pan Head Screw with Washer	P334200113	M4X6(Chromate P-4)		3	(Ground)
13	74575145	Bracket (F)	6824764			1	
14	79573416	Hex Soc Cap Screw	P330210003	M5X10		2	
15	74569809	Block Terminal	P864008047	MK4/16KRG	WEIDMULLER	1	
16	79316101	Hex Soc Cap Screw	P330200006	M3X15		2	

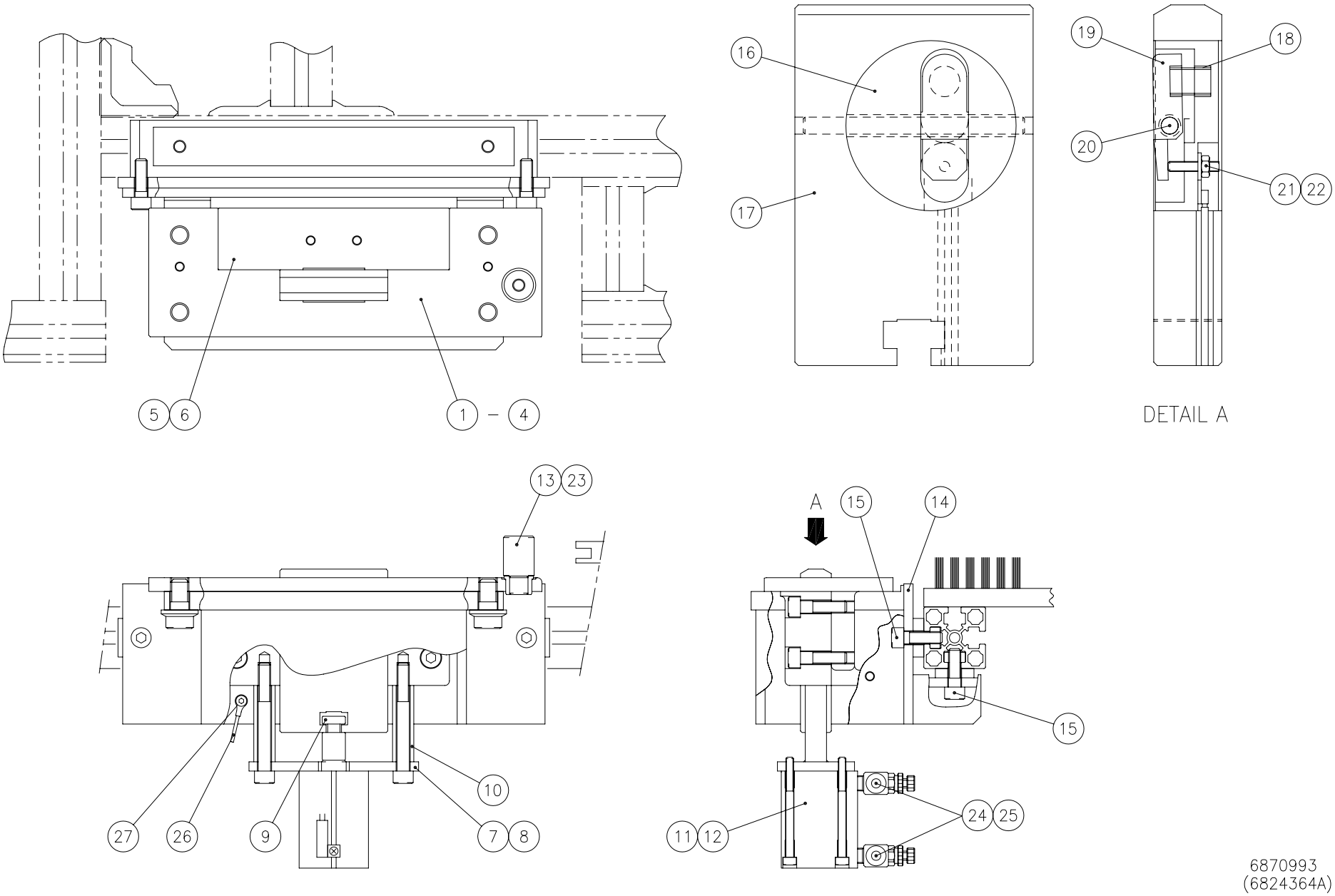
5
6
1 – 4
16
17
19
18
20
21
22
DETAIL A
13
23
A
15
14
15
10
27
26
9
7
8
24
25
11
12
6870993
(6824364A)

From Serial No.36102001 and after

Index	Code	Parts Name	Drawing No.	Type	Maker	Q'ty	Note
1	74563933	Locating Pin Guide A	6572986 E			1	
2	79568704	Hex Soc Cap Screw	P330250004	M12X25		4	
3	86610819	Spring Washer	P336050008	12		4	
4	86613931	Washer	P336000008	12(Regular Round)		4	
5	74382816	Locating Pin Guide	6572978 B			1	
6	79568702	Hex Soc Cap Screw	P330230008	M8X30		4	
7	74722137	Cylinder Guide B	6533802			1	
8	36326825	Hex Soc Cap Screw	P330230016	M8X70		2	
9	74382977	Locating Pin Collar	6533803 A			1	
10	74382979	Cylinder Guide A	6533807			2	
11	74415497	Cylinder	7832807 A	CDQ2B32D-W0501-30	SMC	1	
12	79316159	Hex Soc Cap Screw	P330210018	M5X65		4	
13	74389511	Stopper Pin Bushing	6578599 B			1	
14	74578845	Locating Pin Bracket	6597285 B			1	
15	79566121	Hex Soc Cap Screw	P330230007	M8X25		4	
16	74382996	Stopper With Sensor	6533862 B			1	
17	74387231	Insulator	0829976 C	MC801		1	
18	71361522	Spring	0829622 A			1	
19	74573709	X-axis Touch Sensor Assy	0829974 C			1	

From Serial No.36102001 and after

Index	Code	Parts Name	Drawing No.	Type	Maker	Q'ty	Note
20	74561072	Straight Pin	0829975 A			1	
21	74571503	Socket Set Screw	P330550179	M3X15(Flat-end)-A2-70		1	
22	74716014	Nut	P332000014	M3(Thin)		1	
23	74389510	Stopper Pin	6572979 B			1	
24	74569814	Plastic Hose	P230222101	U2-4-6X4(Red)-2M	NITTA MOORE	1	
25	71512277	Plastic Hose	P230222102	U2-4-6X4(Blue)-2M	NITTA MOORE	1	
26	74415496	Cable CR-6 (PE)	6827405			1	(Ground)
27	79574601	Hex Soc Cap Screw	P330200015	M4X10		1	(Ground)
28	74575274	Cable F-19	6824586			1	List Only

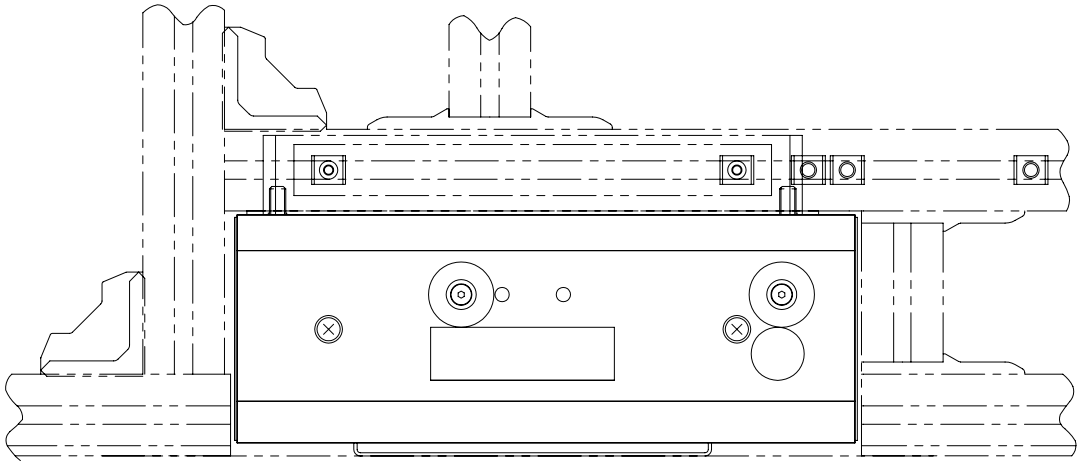

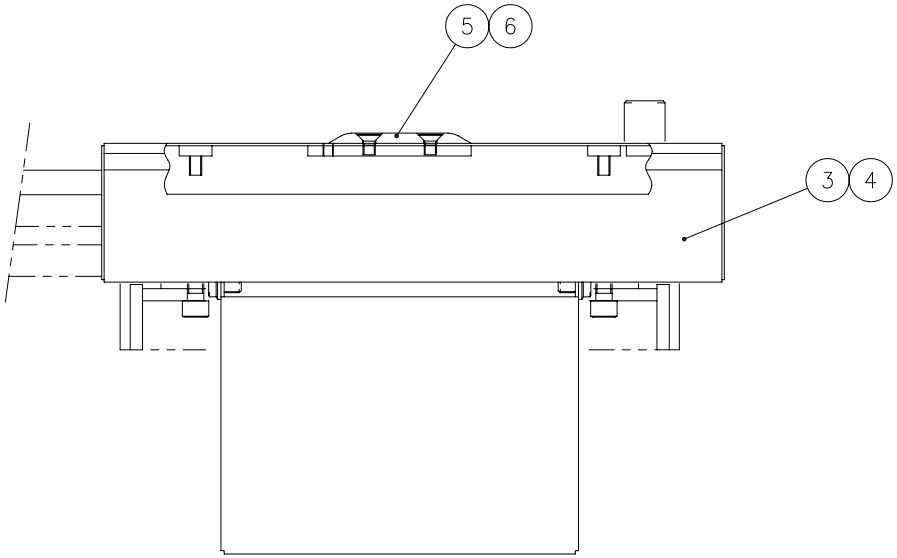

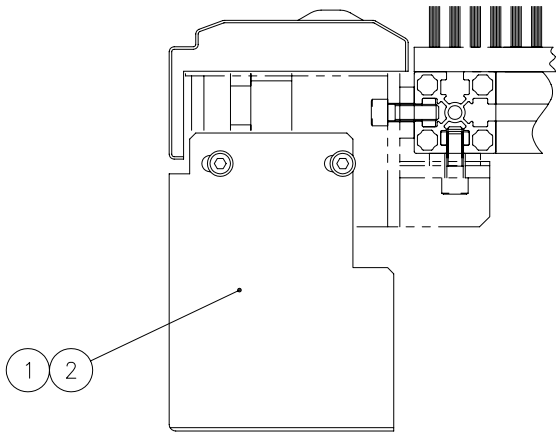

6827319
(6823658)

From Serial No.36102001 and after

Index	Code	Parts Name	Drawing No.	Type	Maker	Q'ty	Note
1	74575629	Side Cover	6813196 A			1	
2	75428708	Flange Socket Bolt	P330468015	M6X10	NISSAN NEJI	4	
3	74571329	Locating Pin Cover (A)	6823659			1	
4	31183551	Flat Head Bolt	P334520001	M6X15		2	
5	74562417	Support Plate (NJ)	6599304 A			2	
6	79321267	Flat Head Bolt	P334520006	M5X10		2	

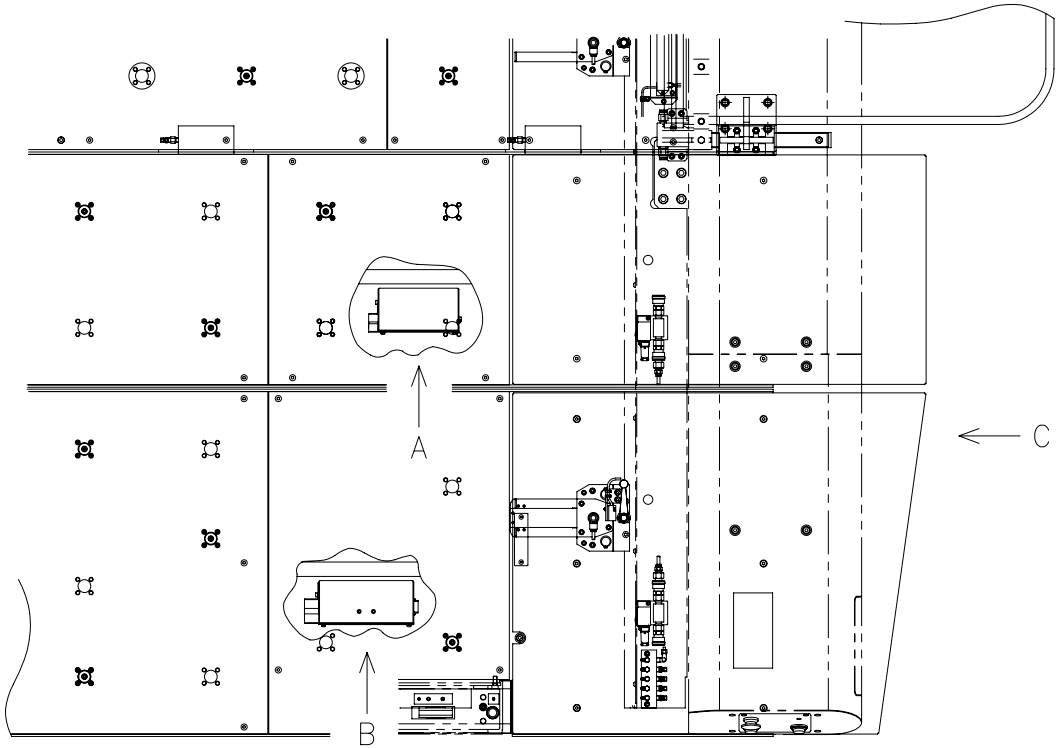

Front Side

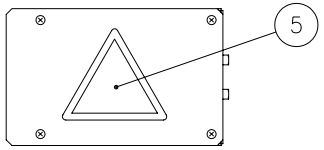

<FC Relay Box>
VIEW A

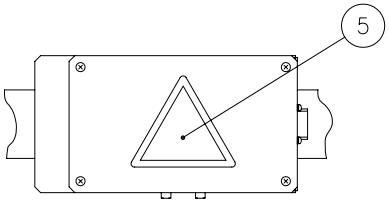

<F Relay Box>
VIEW B

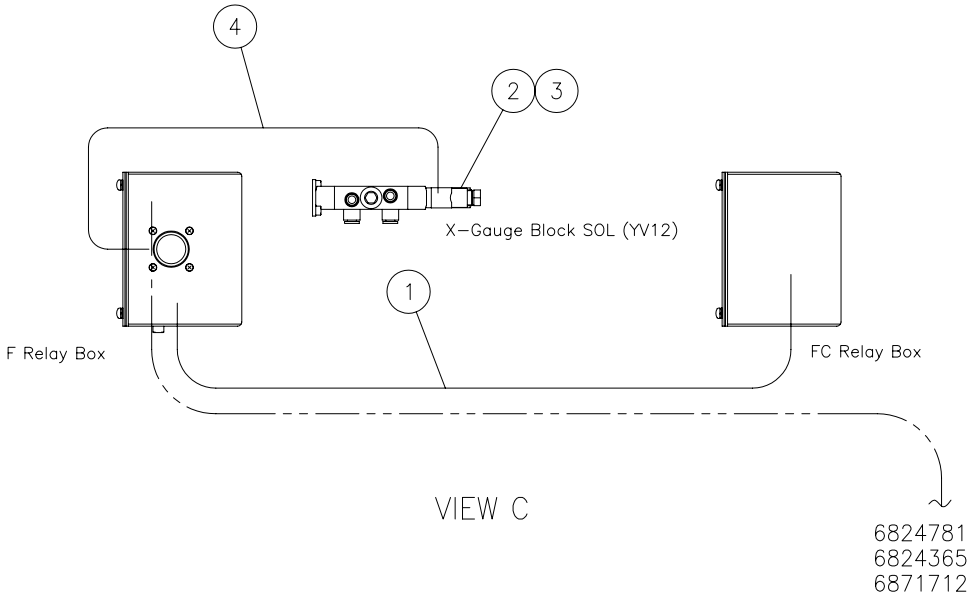

VIEW C

Unit No. 224

OL-C(8) From Serial No.36102001 and after

Index	Code	Parts Name	Drawing No.	Type	Maker	Q'ty	Note
1	74415554	Cable CH-1	6828051 B			1	
2	74569880	Solenoid Valve	7832809		SMC	1	
3	79572401	Hex Soc Cap Screw	P330200014	M4X8		2	
4	74575280	Cable Y-12 (1)	6827575			1	
5	74379098	Charging Mark	P360200003	JISB6015-80H		2	

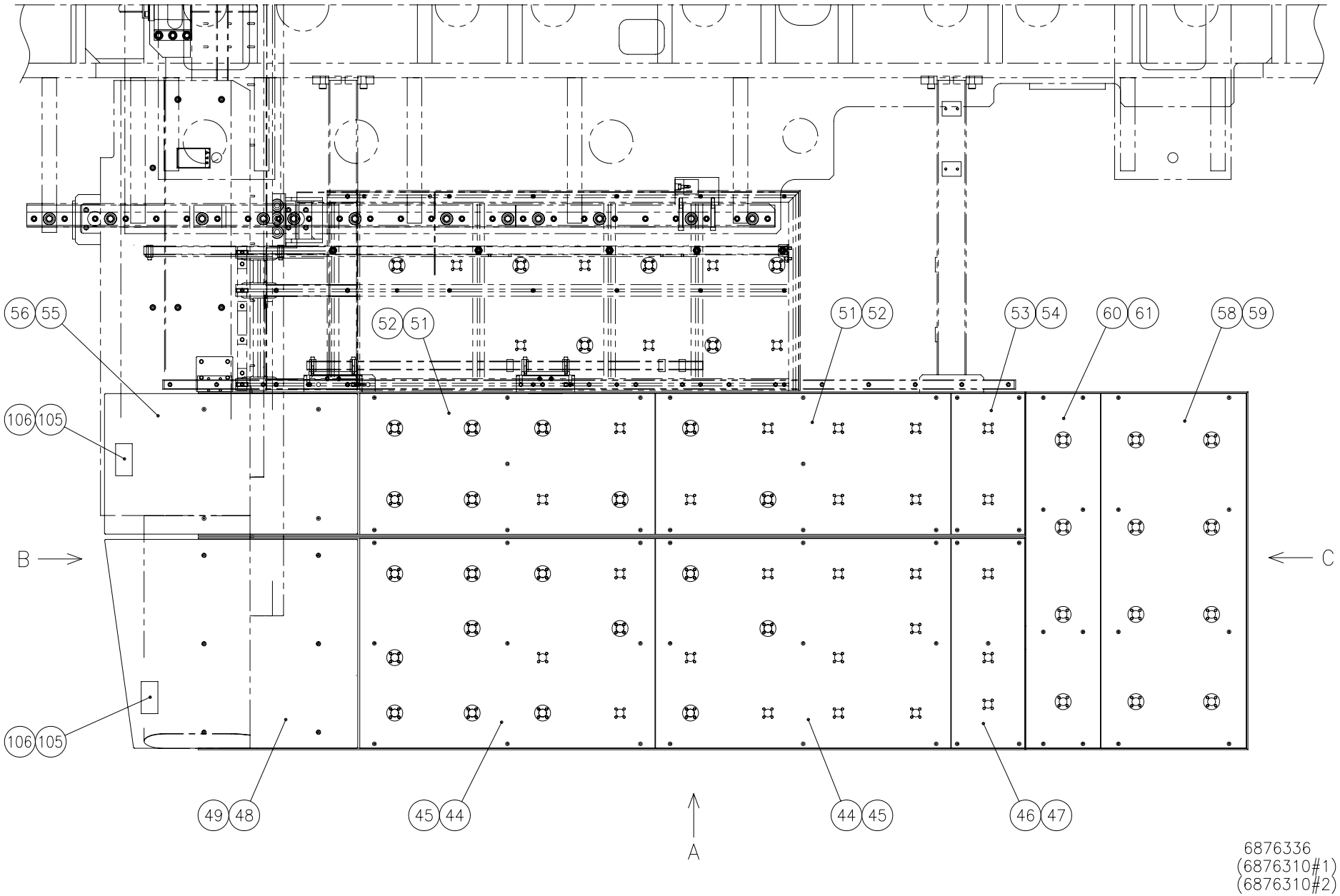
56 55
52 51
51 52
53 54
60 61
58 59
106 105
B
C
106 105
49 48
45 44
44 45
46 47
A
6876336
(6876310#1)
(6876310#2)

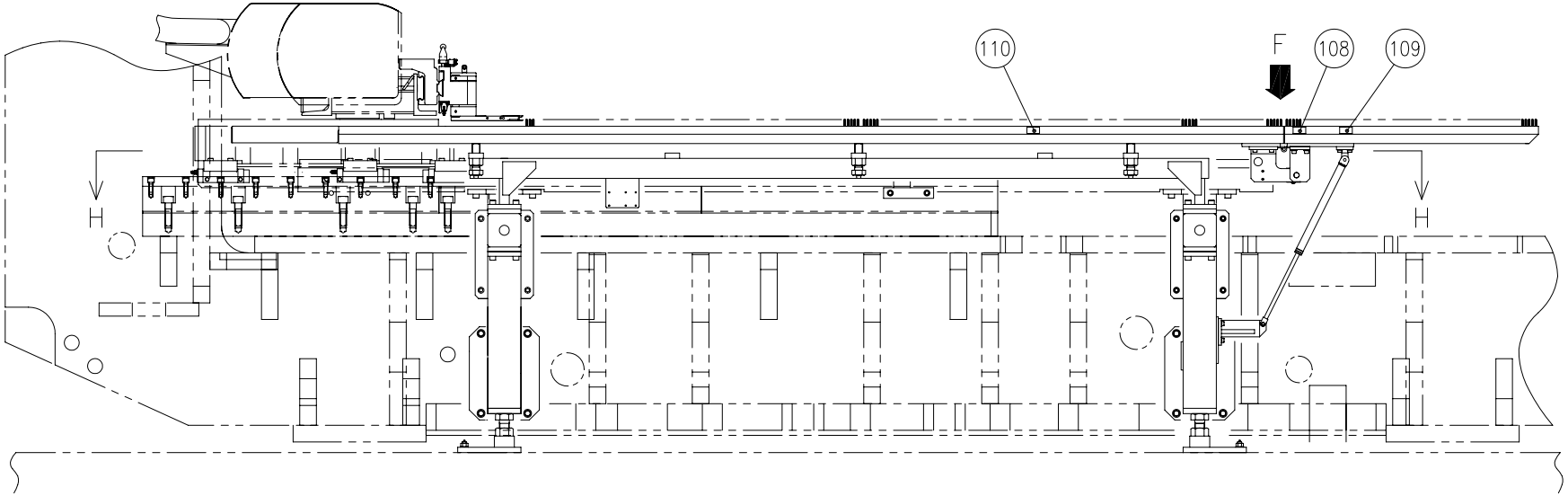

VIEW A

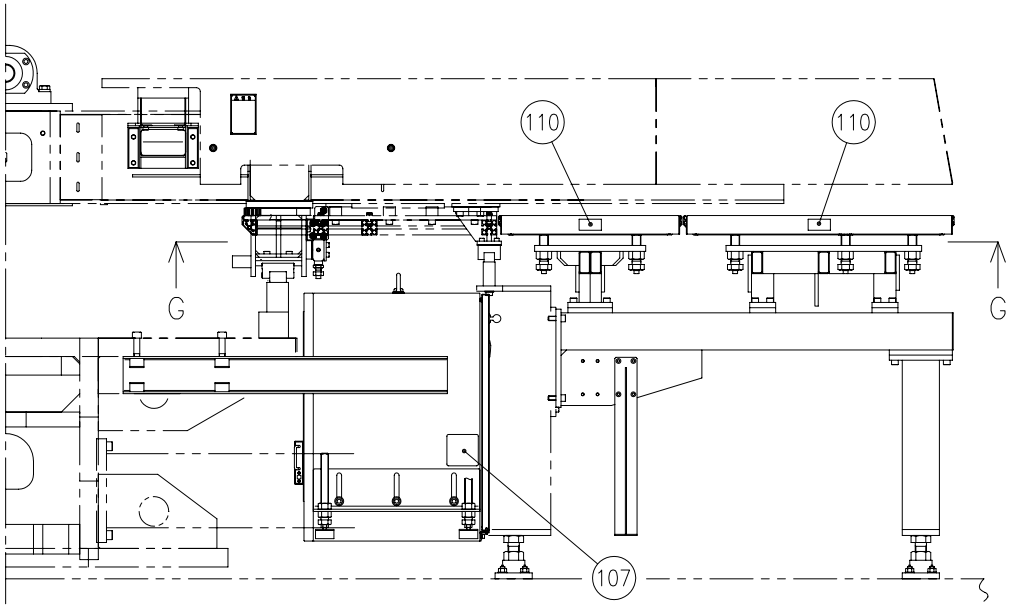

VIEW B

6876336
(6876310#1)
(6876310#2)

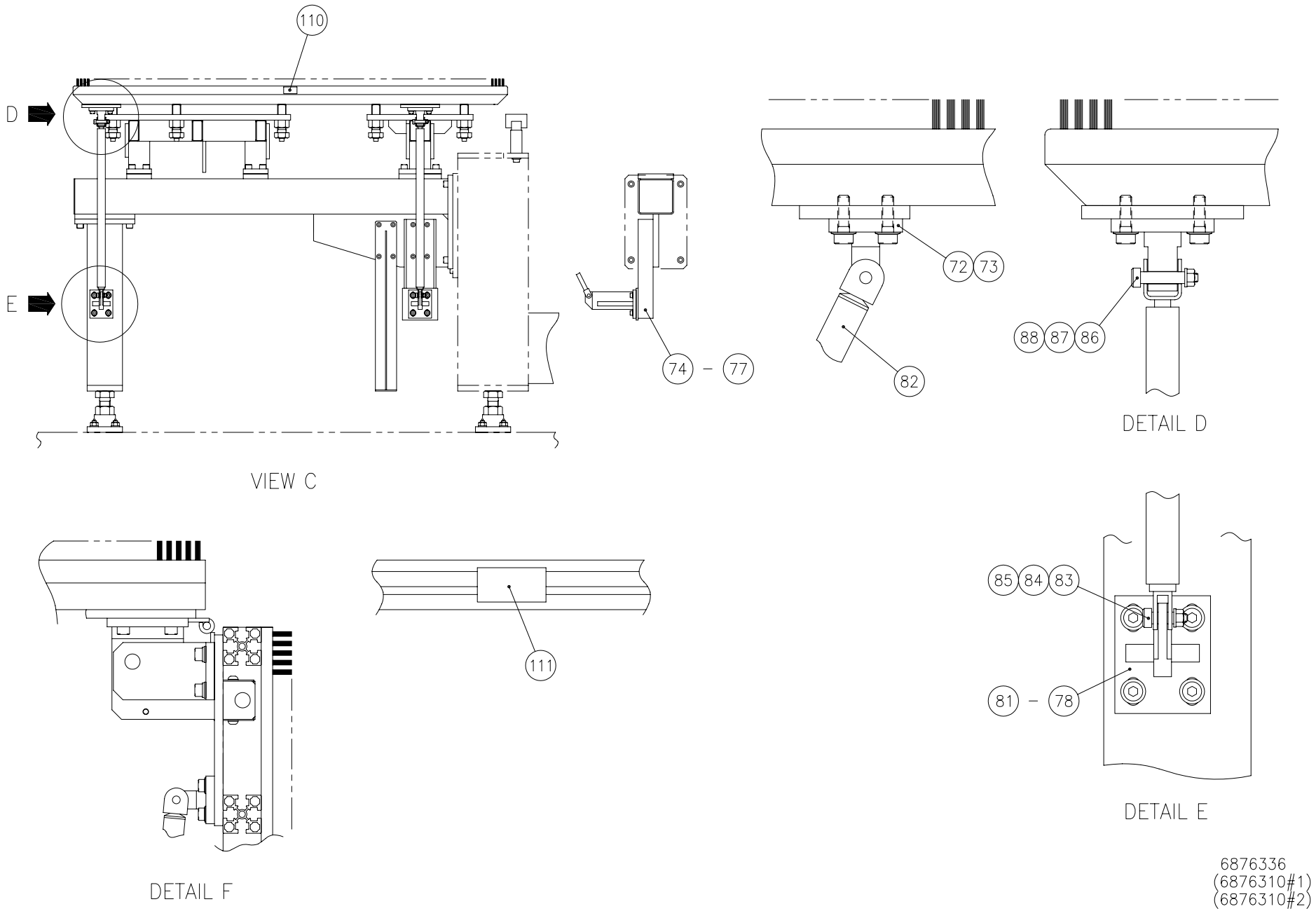
110
D
E
VIEW C
74 – 77
72 73
82
88 87 86
DETAIL D
111
DETAIL F
85 84 83
81 – 78
DETAIL E
6876336
(6876310#1)
(6876310#2)

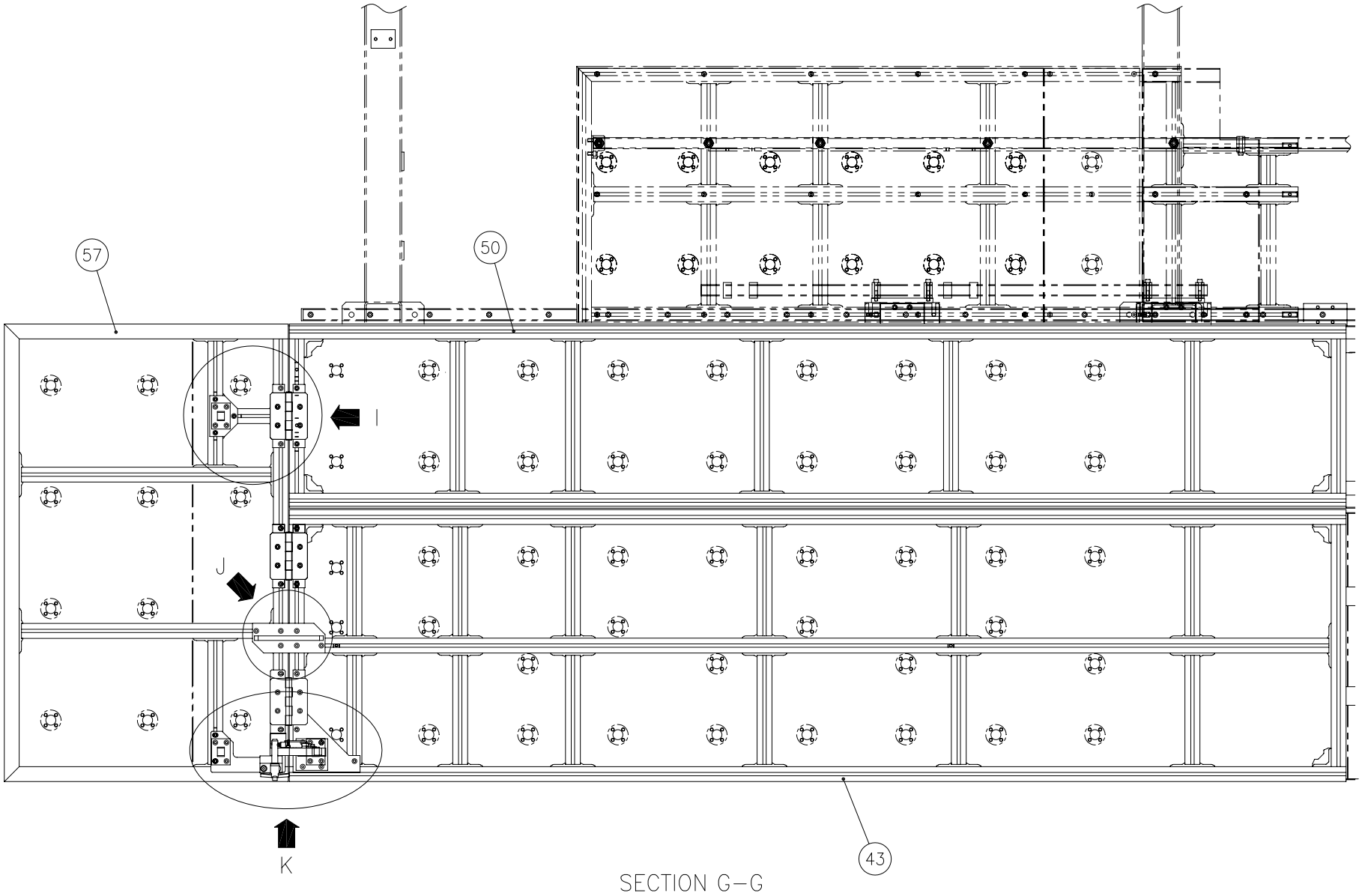

6876336
(6876310#1)
(6876310#2)

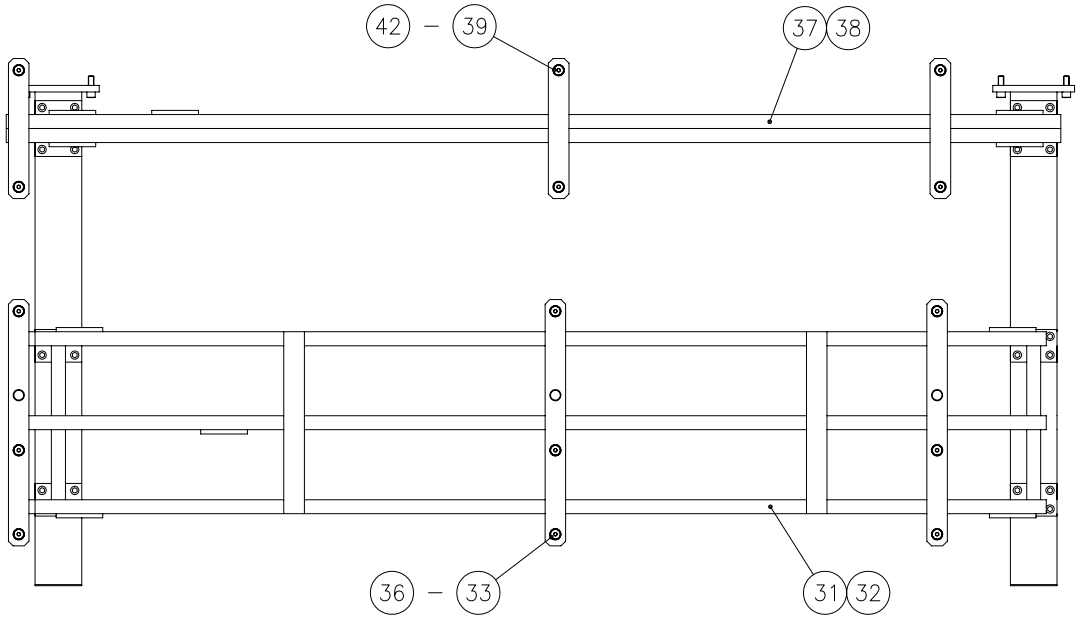

SECTION H–H

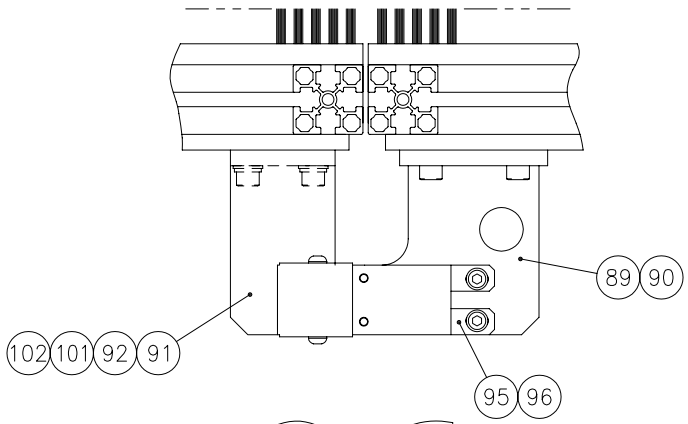

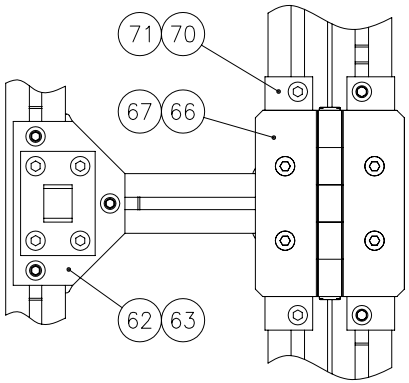

DETAIL I

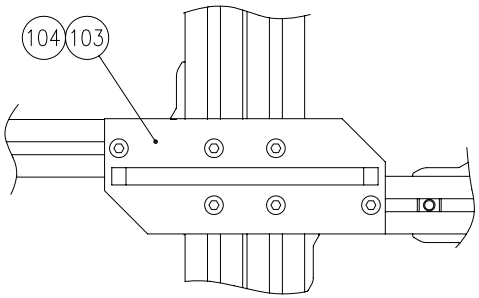

DETAIL J

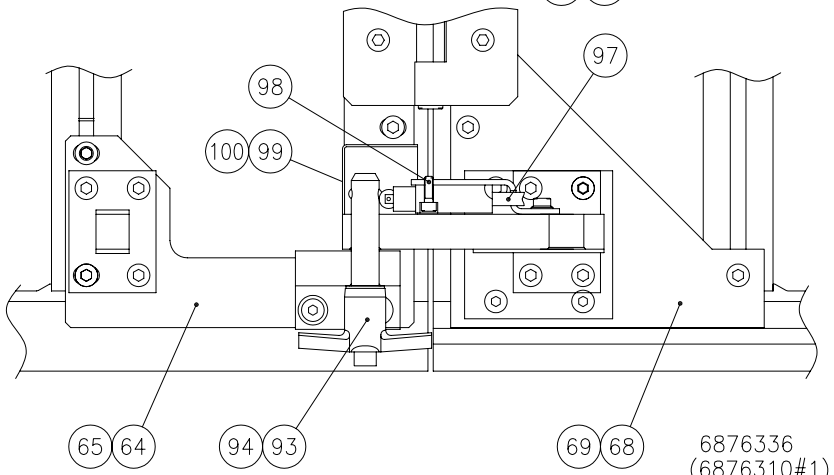

6876336
(6876310#1)
(6876310#2)

DETAIL K

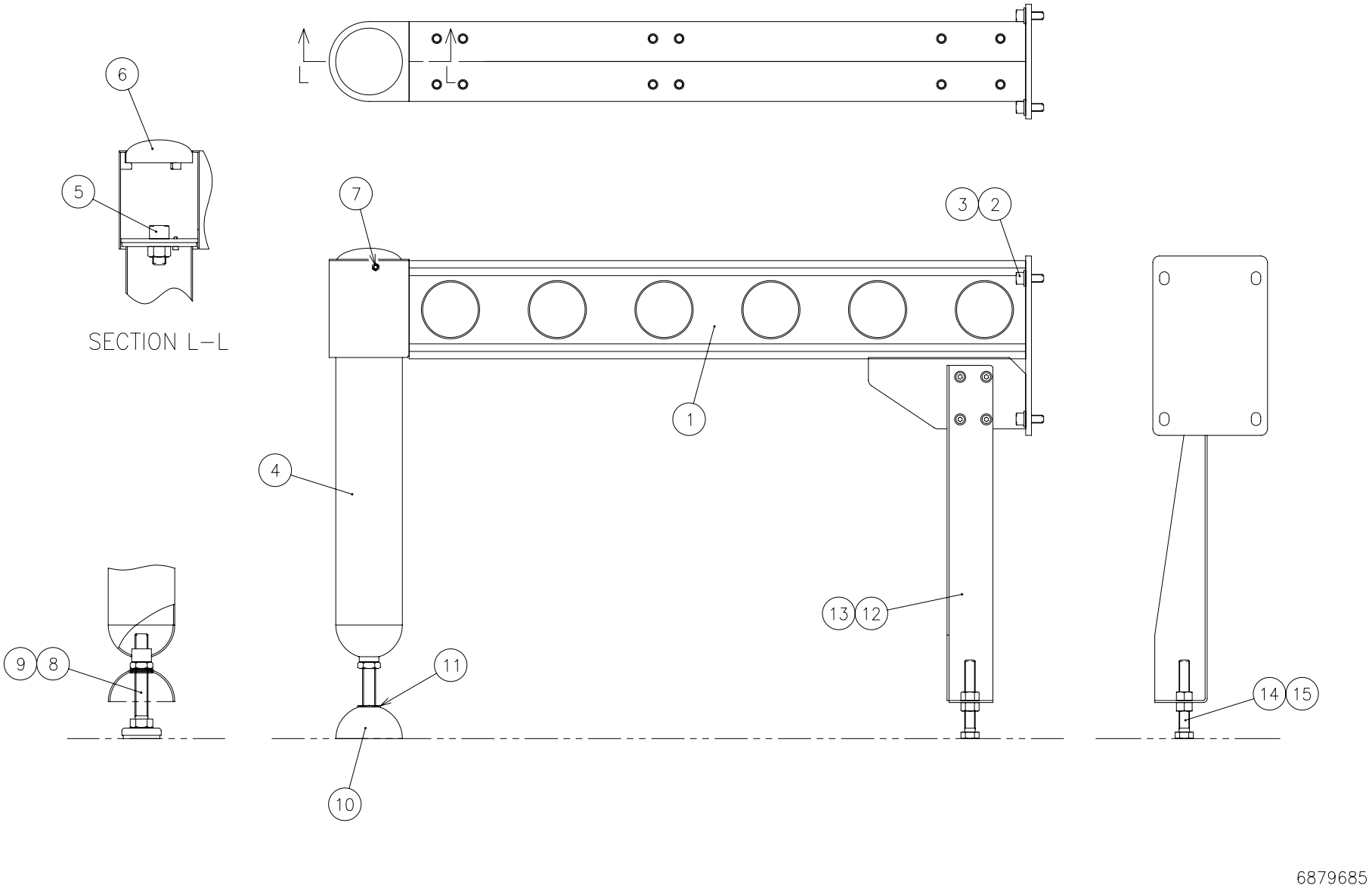
6
5
SECTION L–L
L
L
7
3
2
1
4
13
12
9
8
11
10
14
15
6879685

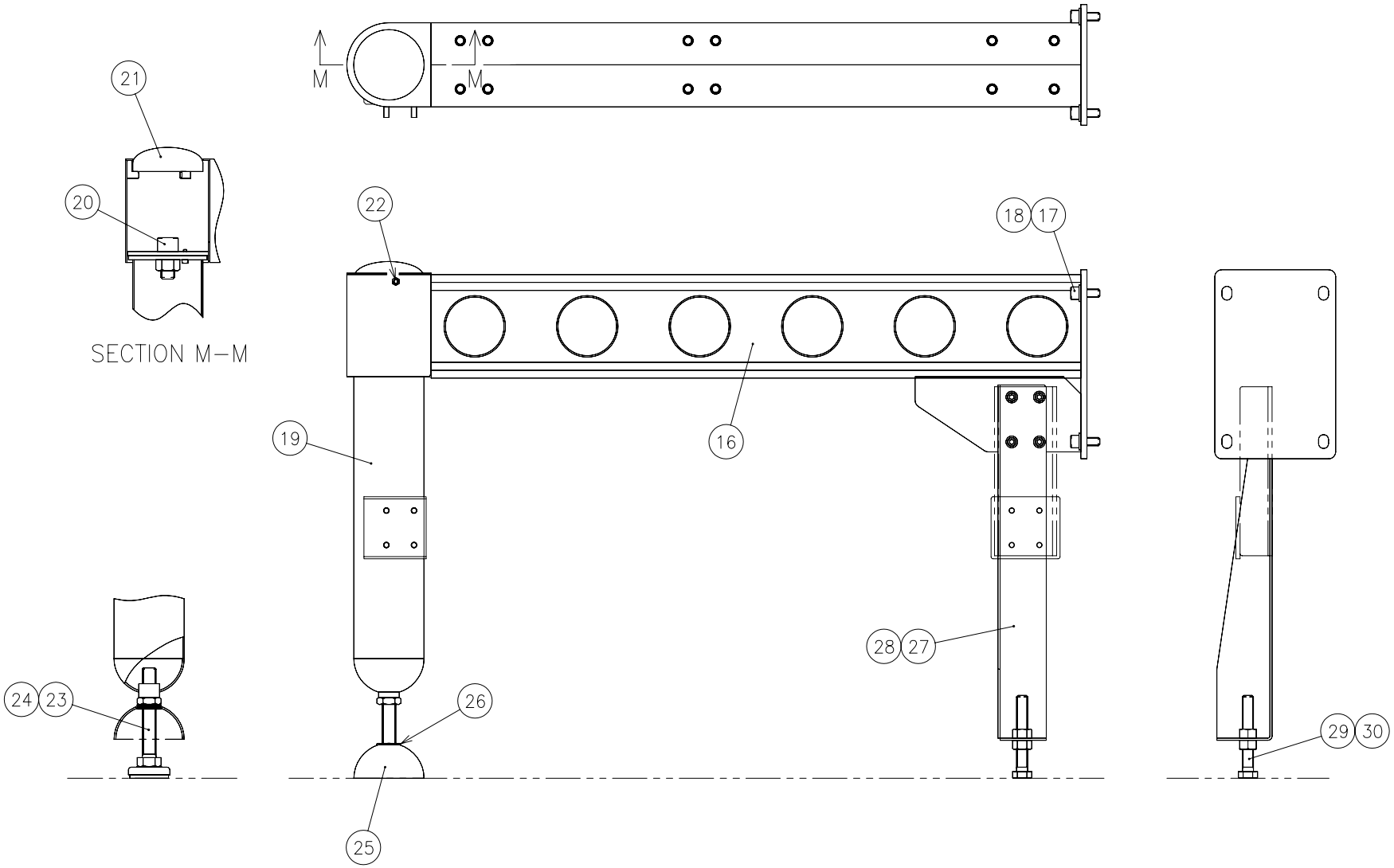

6879662

Index	Code	Parts Name	Drawing No.	Type	Maker	Q'ty	Note
1	74419472	Side Table Base (R)	380787100A			1	
2	36367655	Hex Soc Cap Screw	P330250005	M12X30		4	
3	86613931	Washer	P336000008	12(Regular Round)		4	
4	74419473	Stand	6879686			1	
5	36320521	Hex Soc Cap Screw	P330270003	M20X40		1	
6	74419474	Cap	6879678			1	
7	86620204	Socket Set Screw	P330590019	M6X10(Cup-end)		1	
8	74570064	Level Adjuster	P384022021	KC-280-0	TAKIGEN	1	
9	10380040	Nut	P332000023	M20(Thin)		1	
10	74419475	Level Adjuster Cover	3807879			1	
11	31100028	Bush For Cable	P229112053	C-30-NG-79-Q	TAKIGEN	1	
12	74419476	Shipping Bracket	3807874 A			1	
13	75420815	Flange Socket Bolt	P330468001	M8X20	NISSAN NEJI	4	
14	36163072	Bolt	P330060076	M16X120(All-thread)		1	
15	86611630	Nut	P332000066	M16(Type-1)		1	
16	74419472	Side Table Base (R)	380787100A			1	
17	36367655	Hex Soc Cap Screw	P330250005	M12X30		4	
18	86613931	Washer	P336000008	12(Regular Round)		4	
19	74419484	Stand (RT)	6879680			1	

Index	Code	Parts Name	Drawing No.	Type	Maker	Q'ty	Note
20	36320521	Hex Soc Cap Screw	P330270003	M20X40		1	
21	74419474	Cap	6879678			1	
22	86620204	Socket Set Screw	P330590019	M6X10(Cup-end)		1	
23	74570064	Level Adjuster	P384022021	KC-280-0	TAKIGEN	1	
24	10380040	Nut	P332000023	M20(Thin)		1	
25	74419475	Level Adjuster Cover	3807879			1	
26	31100028	Bush For Cable	P229112053	C-30-NG-79-Q	TAKIGEN	1	
27	74419476	Shipping Bracket	3807874 A			1	
28	75420815	Flange Socket Bolt	P330468001	M8X20	NISSAN NEJI	4	
29	36163072	Bolt	P330060076	M16X120(All-thread)		1	
30	86611630	Nut	P332000066	M16(Type-1)		1	
31	74418401	Side Table Frame (1)	6872490			1	
32	36110743	Hex Soc Cap Screw	P330250006	M12X35		16	
33	74569742	Jack Screw	6821834			9	
34	71371592	Nut	P332000011	M24		9	
35	79316161	Hex Soc Cap Screw	P330230024	M8X110		9	
36	79567109	Washer	P336000006	8(Regular Round)		9	
37	74418402	Side Table Frame (2)	6872491			1	
38	36110743	Hex Soc Cap Screw	P330250006	M12X35		8	

Index	Code	Parts Name	Drawing No.	Type	Maker	Q'ty	Note
39	74569742	Jack Screw	6821834			6	
40	71371592	Nut	P332000011	M24		6	
41	79316161	Hex Soc Cap Screw	P330230024	M8X110		6	
42	79567109	Washer	P336000006	8(Regular Round)		6	
43	74419485	Fixed Table (R) A	7830943 B		NIC	1	
44	74571312	MDF Brush (K-4)	6823663 A			2	
45	74722756	Button Head Screw	P334500021	M8X25		18	
46	74418404	MDF Brush (K-9)	6872492			1	
47	74722756	Button Head Screw	P334500021	M8X25		5	
48	74415470	Cover Table (R-1)	6823014 A			1	
49	79565423	Hex Soc Cap Screw	P330230004	M8X15		6	
50	74418405	Fixed Table (R) B	7830944		NIC	1	
51	74415176	MDF Brush (K-1)	6823635			2	3.2mm
51	74575212	MDF Brush (K-1)	6823846			2	4.5mm
52	74722756	Button Head Screw	P334500021	M8X25		14	
53	74418406	MDF Brush (K-10)	6872493			1	3.2mm
53	74418407	MDF Brush (K-10)	6878329			1	4.5mm
54	74722756	Button Head Screw	P334500021	M8X25		4	
55	74415449	Cover Table (F-2)	6823844 A			1	

Index	Code	Parts Name	Drawing No.	Type	Maker	Q'ty	Note
56	79565423	Hex Soc Cap Screw	P330230004	M8X15		4	
57	74418408	Open And Shut Table	7830946		NIC	1	
58	74571313	MDF Brush (K-7)	6823664 A			1	
59	74722756	Button Head Screw	P334500021	M8X25		8	
60	74418409	MDF Brush (K-11)	6872494 A			1	
61	74722756	Button Head Screw	P334500021	M8X25		8	
62	74569784	Gas Spring Plate	6821854			1	
63	79564804	Hex Soc Cap Screw	P330230006	M8X20		3	
64	74571320	Hinge Plate (1)	6823674 A			1	
65	79564804	Hex Soc Cap Screw	P330230006	M8X20		3	
66	74383136	Hinge Add.Works	6579383	B-1001-2		3	
67	86612728	Hex Soc Cap Screw	P330230002	M8X12		12	
68	74569786	Hinge Plate (2)	6821856			1	
69	79564804	Hex Soc Cap Screw	P330230006	M8X20		3	
70	74569787	Hinge Plate (3)	6821857			4	
71	79564804	Hex Soc Cap Screw	P330230006	M8X20		8	
72	74575218	Gas Spring Bracket (2)	6822978 A			2	
73	75420636	Flange Socket Bolt	P330468003	M8X25	NISSAN NEJI	8	
74	74419486	Gas Spring Bracket (3)	6879679			1	

Index	Code	Parts Name	Drawing No.	Type	Maker	Q'ty	Note
75	73114706	Flange Socket Bolt	P330468002	M8X30	NISSAN NEJI	4	
76	74300504	Nut	P332000005	M8		4	
77	79567109	Washer	P336000006	8(Regular Round)		4	
78	74575220	Gas Spring Bracket (1)	6823003			2	
79	75420636	Flange Socket Bolt	P330468003	M8X25	NISSAN NEJI	4	
80	74300504	Nut	P332000005	M8		4	
81	79567109	Washer	P336000006	8(Regular Round)		4	
82	74387138	Gas Spring	P317555029	50UX0	TAKACHIHO	2	
83	74560042	Shoulder Bolt	P338134013	MSB8-15	MISUMI	2	
84	79565419	Washer	P336000005	6(Regular Round)		2	
85	44274544	Nut	P332000004	M6		2	
86	74379250	Shoulder Bolt	P338134019	MSB8-30	MISUMI	2	
87	79565419	Washer	P336000005	6(Regular Round)		2	
88	44274544	Nut	P332000004	M6		2	
89	74415472	Pin Bracket	6870270			1	
90	79566121	Hex Soc Cap Screw	P330230007	M8X25		4	
91	74415473	Pin Bracket (2)	6822980 B			1	
92	79566121	Hex Soc Cap Screw	P330230007	M8X25		2	
93	74569793	Locating Pin	P337108002	BJ773-16050	IMAO Mfg	1	

Index	Code	Parts Name	Drawing No.	Type	Maker	Q'ty	Note
94	79573416	Hex Soc Cap Screw	P330210003	M5X10		1	
95	74415474	LS Bracket	6822981 D			1	
96	45252001	Flange Socket Bolt	P330460003	M6X15		2	
97	74415962	Cable S-18 (1)	6820258 B			1	
98	79316109	Hex Soc Cap Screw	P330210006	M5X15		2	
99	74415475	LS Cover	6870271			1	
100	36379029	Button Head Screw	P334500013	M6X10		2	
101	79567109	Washer	P336000006	8(Regular Round)		2	
102	86610326	Spring Washer	P336050006	8		2	
103	74569796	Shipping Bracket	6821858			1	
104	79564804	Hex Soc Cap Screw	P330230006	M8X20		6	
105	71362136	Legend Plate (Warning)(3)	6045924			2	English
105	71362135	Legend Plate (Warning)(3) FRA	6045078			2	French
105	71362137	Legend Plate (Warning)(3) GER	6046718			2	German
105	71362138	Legend Plate (Warning)(3) ITA	6046728			2	Italian
105	74415924	Legend Plate (Warning)(3)	6816795			2	Chinese
106	74326603	Blind Rivet	P339208001	NTA3-2	LOBTEX	8	
107	74419480	Legend Plate (Caution) E	3809322	(DO NOT LIFT HERE)		2	English
107	74419481	Legend Plate (Caution) F	3809323			2	French

Index	Code	Parts Name	Drawing No.	Type	Maker	Q'ty	Note
107	74419479	Legend Plate (Caution) G	3809321			2	German
107	74419482	Legend Plate (Caution) I	3809324			2	Italian
107	74419478	Legend Plate (Caution) C	3809319			2	Chinese
108	74415366	Legend Plate (OPEN) B (ENG)	6870230			1	English
108	74415368	Legend Plate (OPEN) B (FRA)	6870231			1	French
108	74415367	Legend Plate (OPEN) B (GER)	6870229			1	German
108	74415365	Legend Plate (OPEN) B (ITA)	6870232			1	Italian
108	74419487	Legend Plate (OPEN) B	6817542			1	Chinese
109	74415370	Legend Plate (Caution)ENG.	6870239			1	English
109	74415372	Legend Plate (Caution)FRA.	6870240			1	French
109	74415371	Legend Plate (Caution)GER.	6870238			1	German
109	74415369	Legend Plate (Caution)ITA.	6870241			1	Italian
109	74419488	Legend Plate (Caution)	6817524			1	Chinese
110	71130447	Legend Plate (Do Not Get On)	0840546			4	
111	74417425	Legend Plate (Warning)	6828694			2	
112	74419483	Adhesive Tape	P379108025	FE-6061 (20mm)	FANTAC	5	1M (List Only)

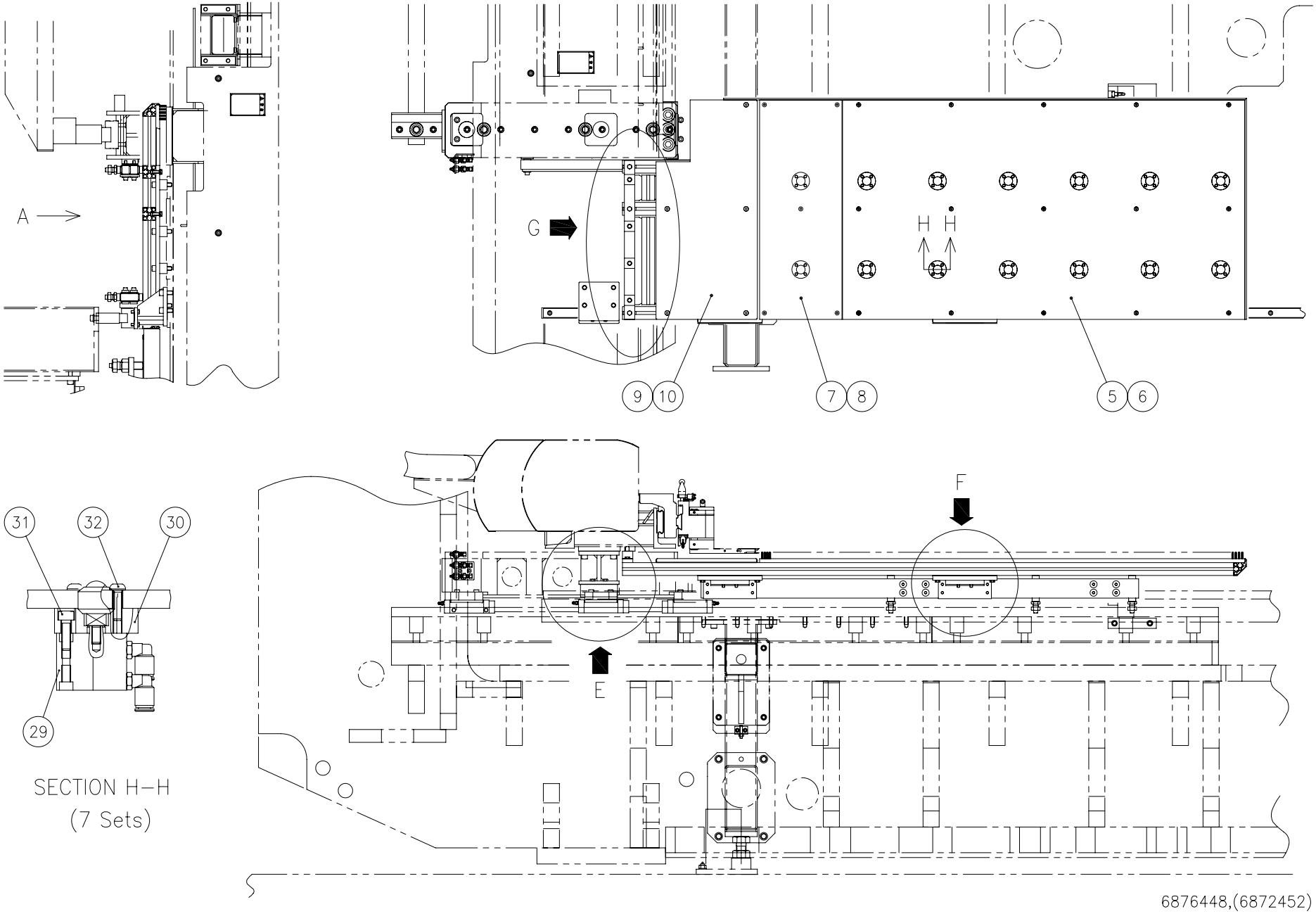
A
G
H H
9
10
7
8
5
6
31
32
30
29
SECTION H–H
(7 Sets)
F
E
6876448,(6872452)

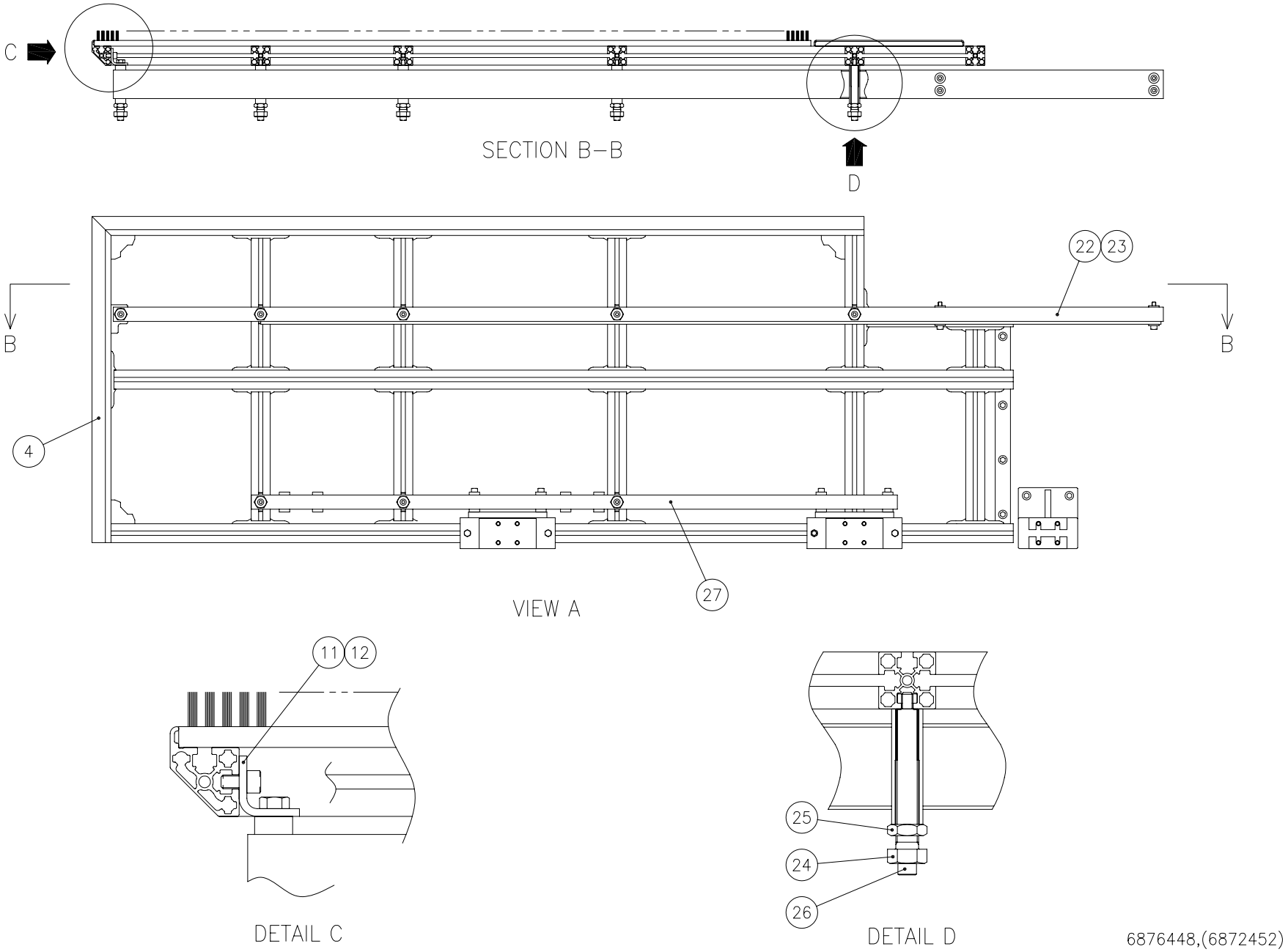
C
SECTION B–B
D
22
23
B
B
4
27
VIEW A
11
12
DETAIL C
25
24
26
DETAIL D
6876448,(6872452)

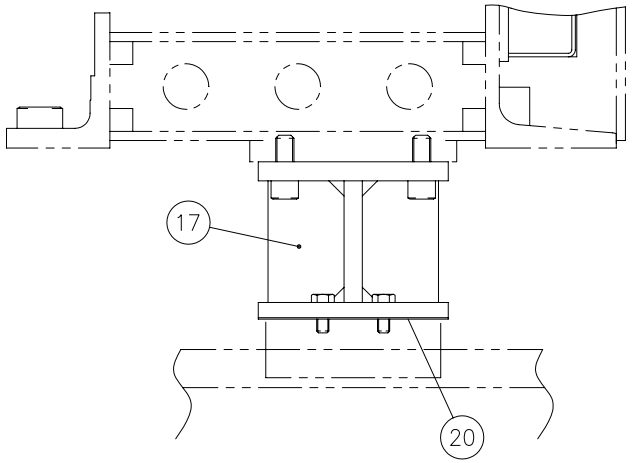

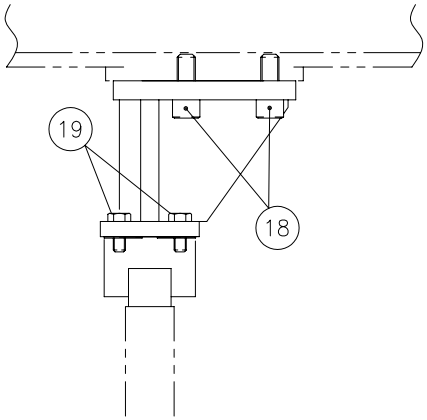

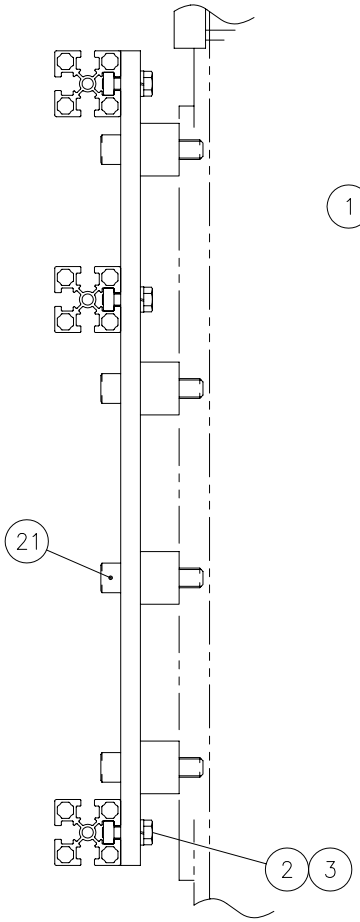

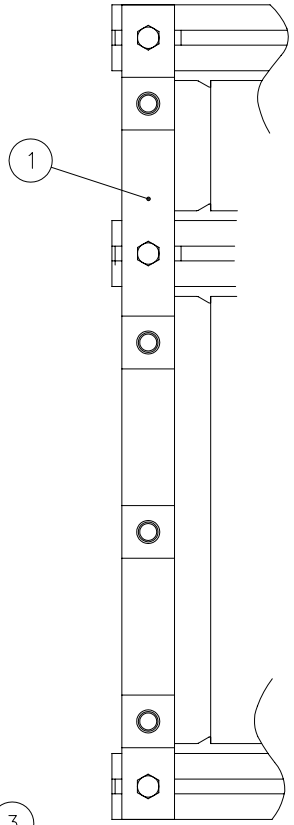

DETAIL G

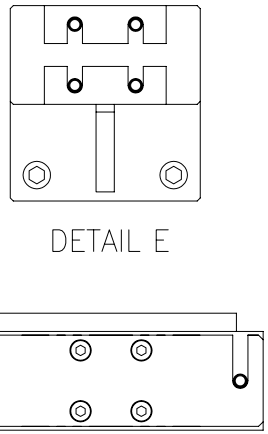

DETAIL E

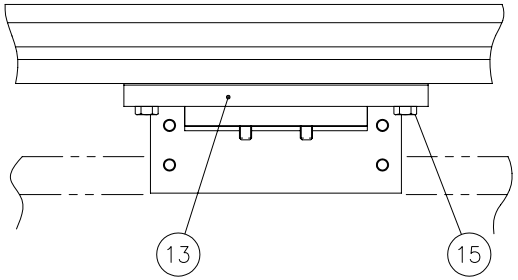

DETAIL F

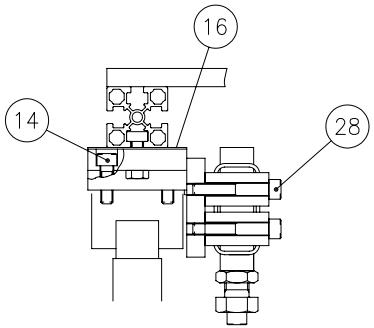

6876448,(6872452)

Index	Code	Parts Name	Drawing No.	Type	Maker	Q'ty	Note
1	74415465	Table Spacer	6828647			1	
2	74183005	Bolt	P330030007	M8X25		3	
3	86610326	Spring Washer	P336050006	8		3	
4	74418395	Moving Table (R)	7830945		NIC	1	
5	74415175	MDF Brush (I-1)	6823682			1	3.2mm
5	74571284	MDF Brush (I-1)	6823627 A			1	4.5mm
6	74722756	Button Head Screw	P334500021	M8X25		15	
7	74578826	MDF Brush (I-2)	6823683			1	3.2mm
7	74571327	MDF Brush (I-2)	6823628 A			1	4.5mm
8	74722756	Button Head Screw	P334500021	M8X25		5	
9	74415466	Cover Table (S-R)	6828662			1	
10	79565423	Hex Soc Cap Screw	P330230004	M8X15		5	
11	74415467	Angle	6828651 A			1	
12	79565423	Hex Soc Cap Screw	P330230004	M8X15		2	
13	74418396	LM Support	6872480			2	
14	79566121	Hex Soc Cap Screw	P330230007	M8X25		8	
15	74183005	Bolt	P330030007	M8X25		4	
16	74571308	Shim	6823604			2	
17	74415468	Moving Table Bracket	6828648			1	

Index	Code	Parts Name	Drawing No.	Type	Maker	Q'ty	Note
18	36367655	Hex Soc Cap Screw	P330250005	M12X30		4	
19	36176605	Bolt	P330030006	M8X20		4	
20	74571309	Shim	6826306			2	
21	79316507	Hex Soc Cap Screw	P330250009	M12X50		4	
22	74418397	Table Guide	6872436	R60X30X2.3		1	
23	10443146	Hex Soc Cap Screw	P330230012	M8X50		4	
24	74415446	Adjustable Bolt	6822812 A			8	
25	78180815	Nut	P332000022	M16(Thin)		8	
26	74707962	Hex Soc Cap Screw	P330230026	M8X120		8	
27	74418398	Auxiliary Arm (1)	6872481	R60X30X2.3		1	
28	10443146	Hex Soc Cap Screw	P330230012	M8X50		8	
29	74568593	Cylinder	7832806 A	SSD-25-15	CKD	1	
30	74569774	Cylinder Collar	6821848			1	
31	79567722	Hex Soc Cap Screw	P330220009	M6X20		4	
32	74314603	Button Head Screw	P334500016	M6X20		4	

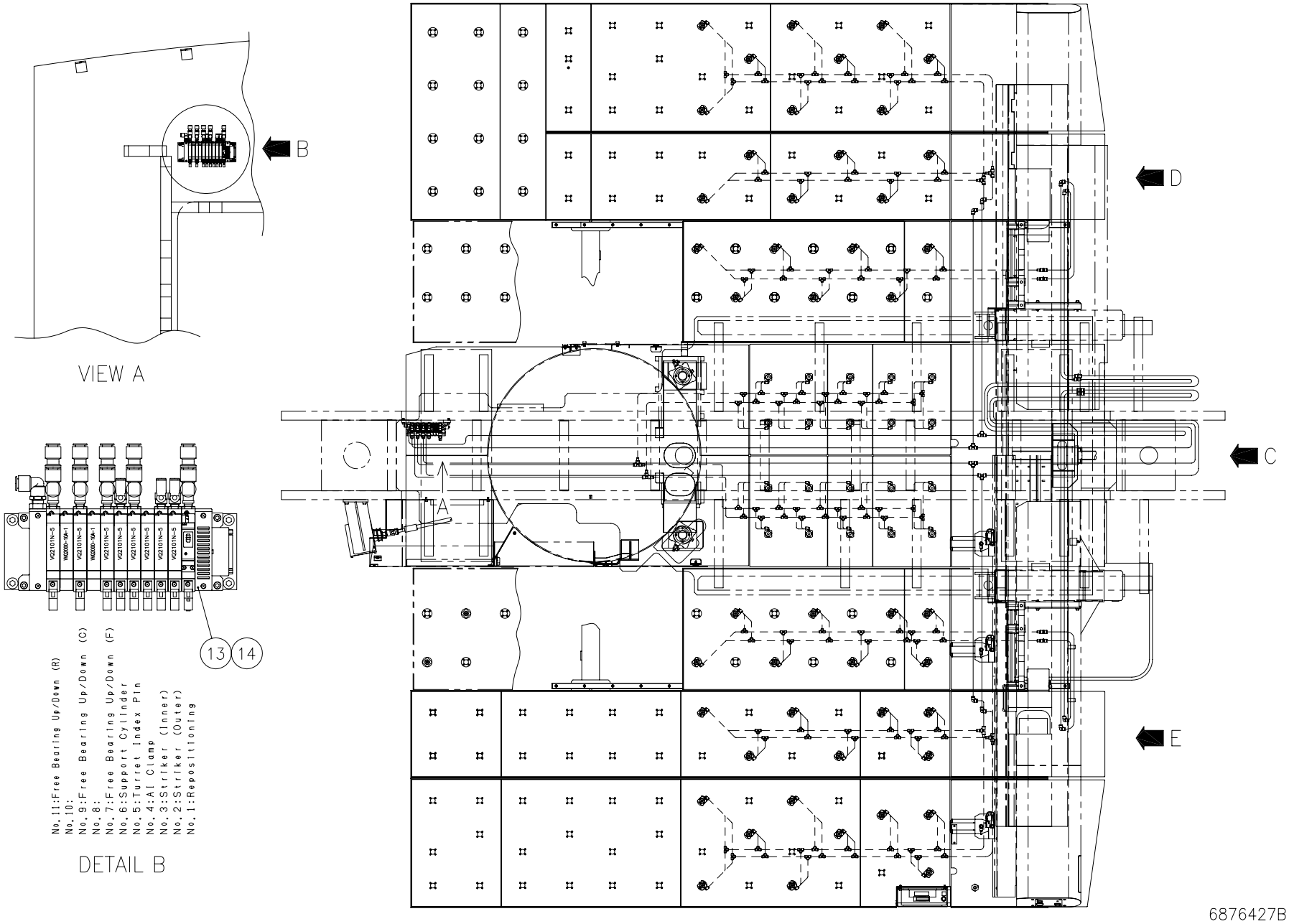
B
VIEW A
A
C
D
E
VQ2101N-5
W2000-10A-1
VQ2101N-5
W2000-10A-1
VQ2101N-5
VQ2101N-5
VQ2101N-5
VQ2101N-5
VQ2101N-5
13
14
No.11:Free Bearing Up/Down (R)
No.10:
No.9:Free Bearing Up/Down (C)
No.8:
No.7:Free Bearing Up/Down (F)
No.6:Support Cylinder
No.5:Turret Index Pin
No.4:Al Clamp
No.3:Striker (Inner)
No.2:Striker (Outer)
No.1:Repositioning
DETAIL B
6876427B

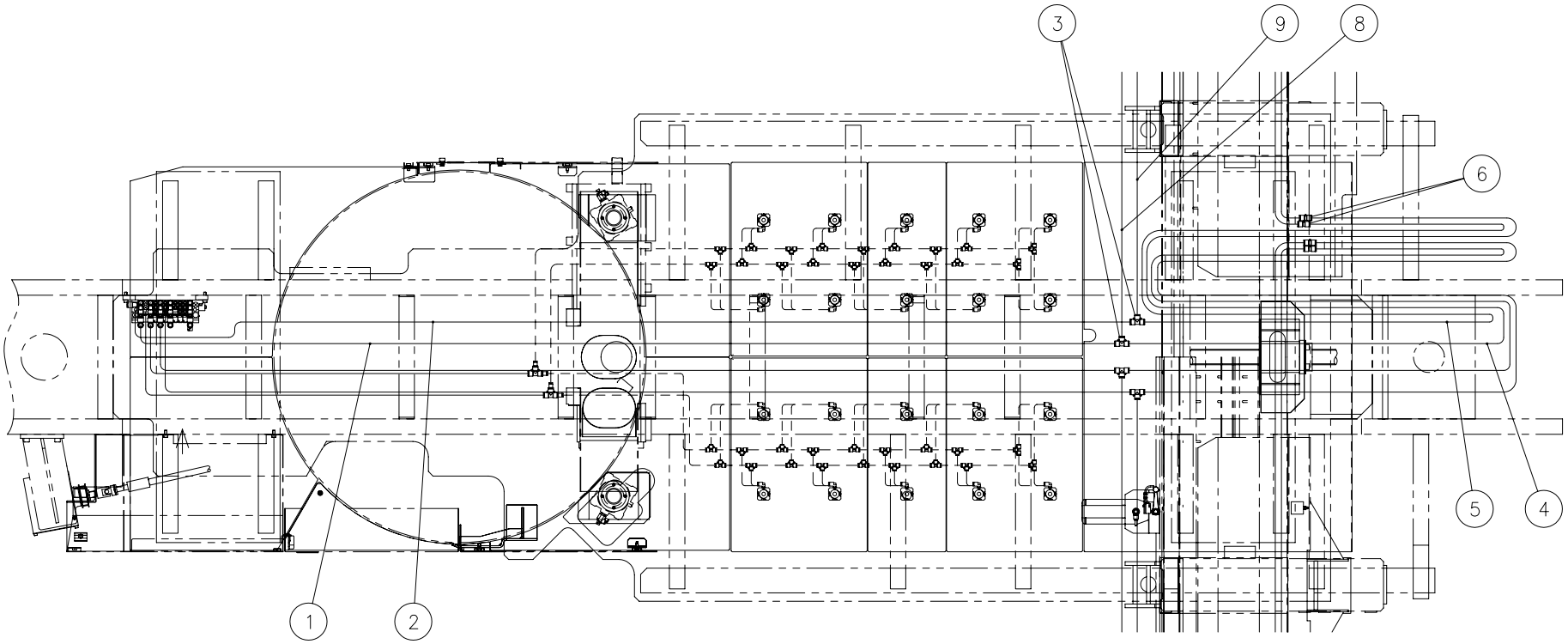

DETAIL C

6876427B

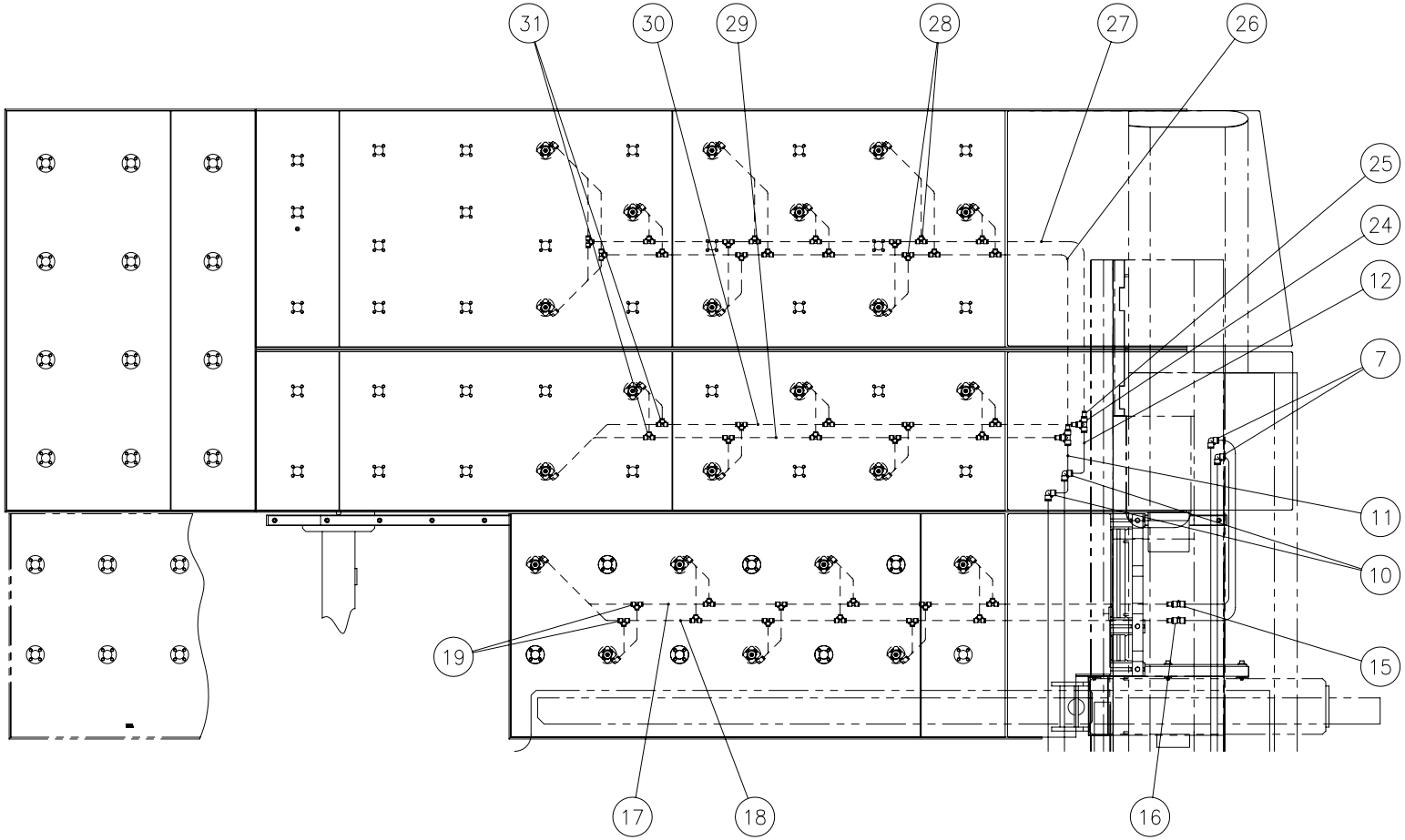

DETAIL D

6876427B

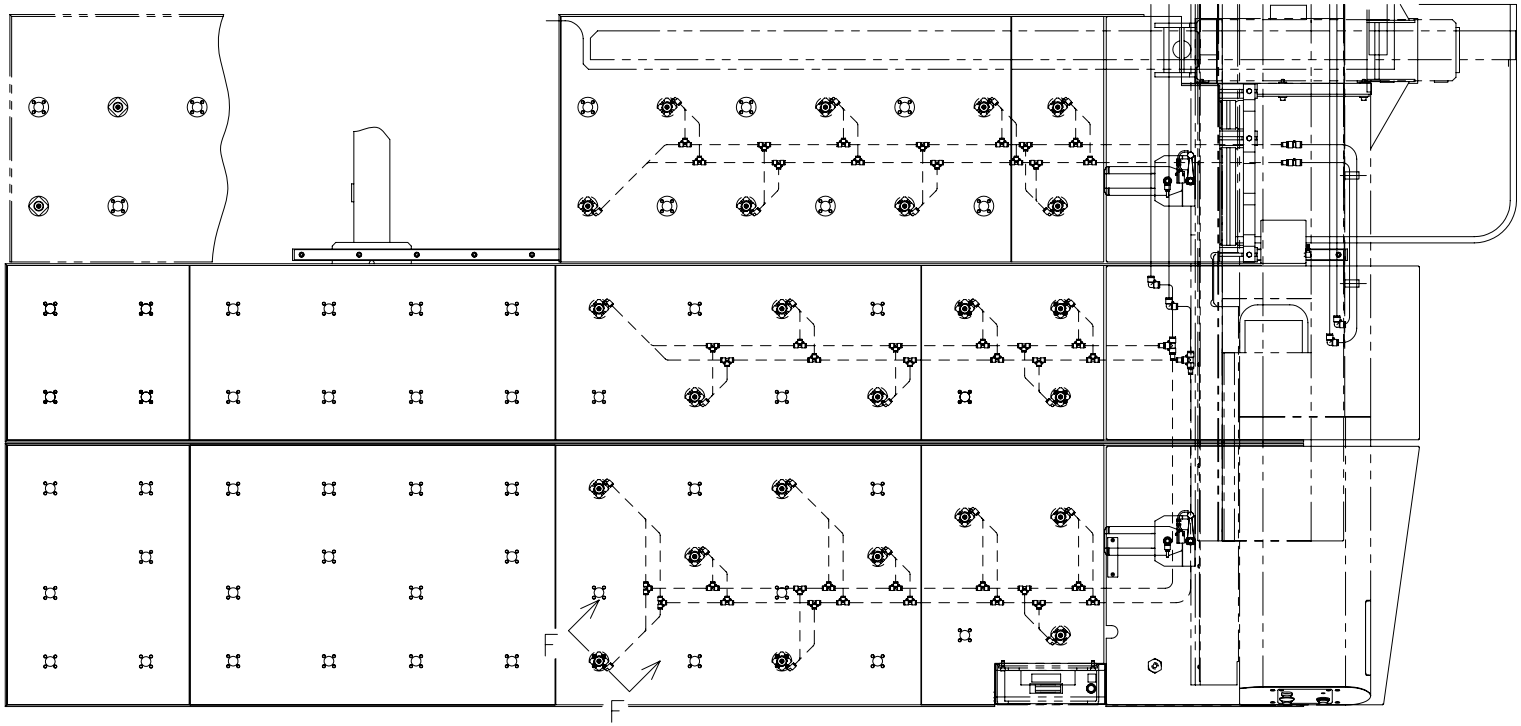

DETAIL E

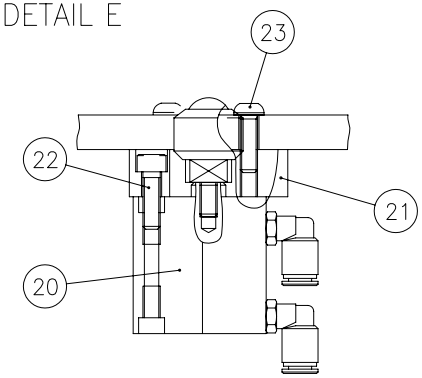

SECTION F–F (Front 16 Sets)
(Rear 15 Sets)

6876427B

From Serial No.36102001 and after

Index	Code	Parts Name	Drawing No.	Type	Maker	Q'ty	Note
1	74415489	Plastic Hose	P230242159	N2-4-10X8(Blue)-7M	NITTA MOORE	1	
2	74415487	Plastic Hose	P230242162	N2-4-10X8(Red)-7M	NITTA MOORE	1	
3	74379378	Instant Fitting	P586604013	EUT10	NITTA MOORE	2	
4	74415489	Plastic Hose	P230242159	N2-4-10X8(Blue)-7M	NITTA MOORE	1	
5	74415487	Plastic Hose	P230242162	N2-4-10X8(Red)-7M	NITTA MOORE	1	
6	74565147	Instant Fitting	P586604021	EUC10	NITTA MOORE	2	
7	74379550	Instant Fitting	P586564016	EUL10	NITTA MOORE	2	
8	74415489	Plastic Hose	P230242159	N2-4-10X8(Blue)-7M	NITTA MOORE	1	
9	74415487	Plastic Hose	P230242162	N2-4-10X8(Red)-7M	NITTA MOORE	1	
10	74379550	Instant Fitting	P586564016	EUL10	NITTA MOORE	2	
11	74415489	Plastic Hose	P230242166	N2-4-10X8(Blue)-1M	NITTA MOORE	1	
12	74415487	Plastic Hose	P230242168	N2-4-10X8(Red)-1M	NITTA MOORE	1	
13	74810502	9-Solenoid Valve	7831573	VV5Q21-11-X398	SMC	1	
14	79568702	Hex Soc Cap Screw	P330230008	M8X30		4	
15	74565147	Instant Fitting	P586604021	EUC10	NITTA MOORE	2	
16	74562784	Instant Fitting	P586654002	ER6-10	NITTA MOORE	2	
17	74415492	Plastic Hose	P230222148	N2-4-6X4(Blue)-10M	NITTA MOORE	1	
18	74415488	Plastic Hose	P230222149	N2-4-6X4(Red)-10M	NITTA MOORE	1	
19	74338327	Instant Fitting	P586604012	EUT6	NITTA MOORE	12	

Index	Code	Parts Name	Drawing No.	Type	Maker	Q'ty	Note
20	74568610	Cylinder	7832804 A	SSD-L-25-15-T5V5-H	CKD	1	
21	74569774	Cylinder Collar	6821848			1	
22	79567722	Hex Soc Cap Screw	P330220009	M6X20		4	
23	74314603	Button Head Screw	P334500016	M6X20		4	
24	74379378	Instant Fitting	P586604013	EUT10	NITTA MOORE	2	
25	74562784	Instant Fitting	P586654002	ER6-10	NITTA MOORE	4	
26	74415492	Plastic Hose	P230222148	N2-4-6X4(Blue)-10M	NITTA MOORE	1	
27	74415488	Plastic Hose	P230222149	N2-4-6X4(Red)-10M	NITTA MOORE	1	
28	74338327	Instant Fitting	P586604012	EUT6	NITTA MOORE	16	
29	74415492	Plastic Hose	P230222148	N2-4-6X4(Blue)-10M	NITTA MOORE	1	
30	74415488	Plastic Hose	P230222149	N2-4-6X4(Red)-10M	NITTA MOORE	1	
31	74338327	Instant Fitting	P586604012	EUT6	NITTA MOORE	10	

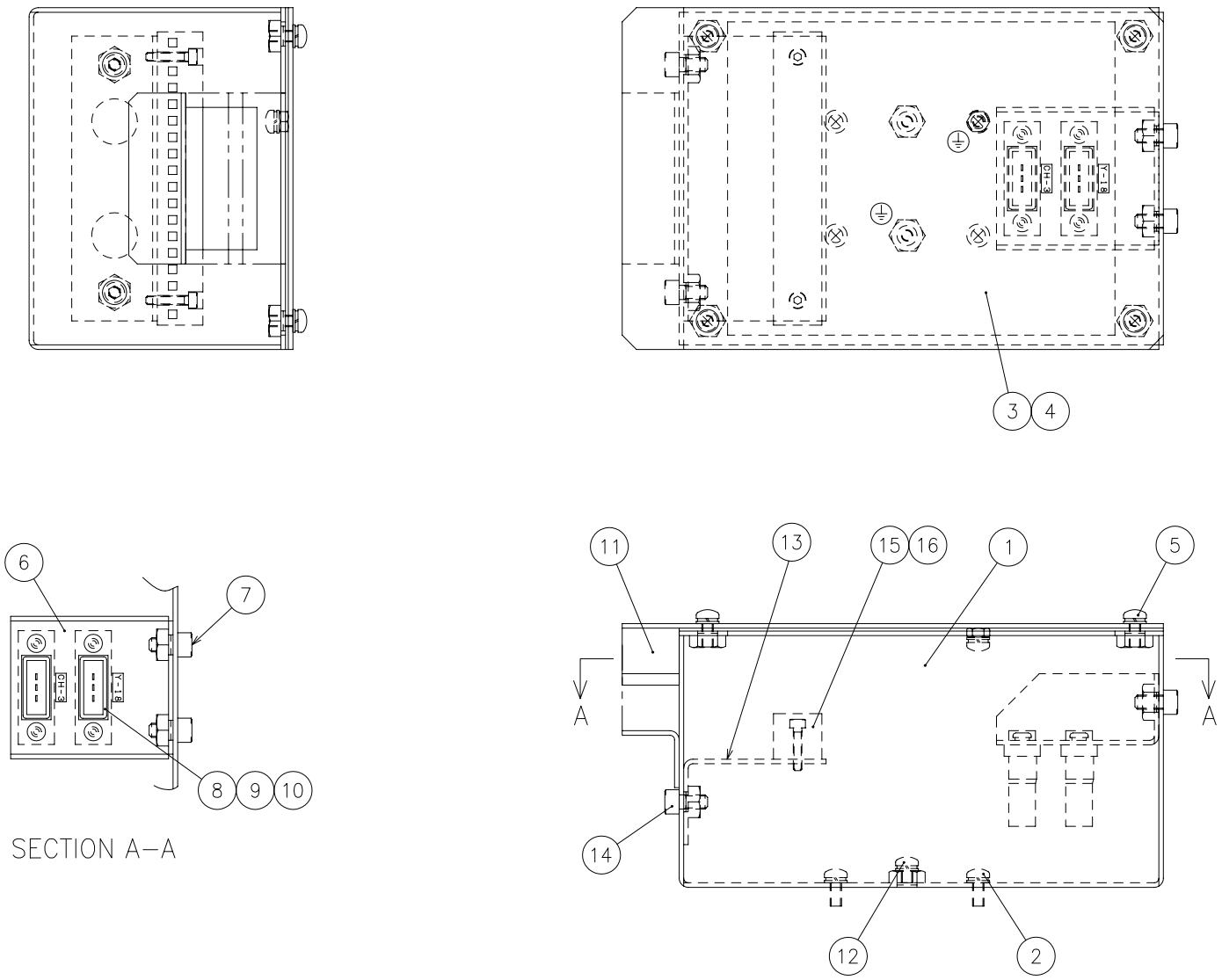

6824778

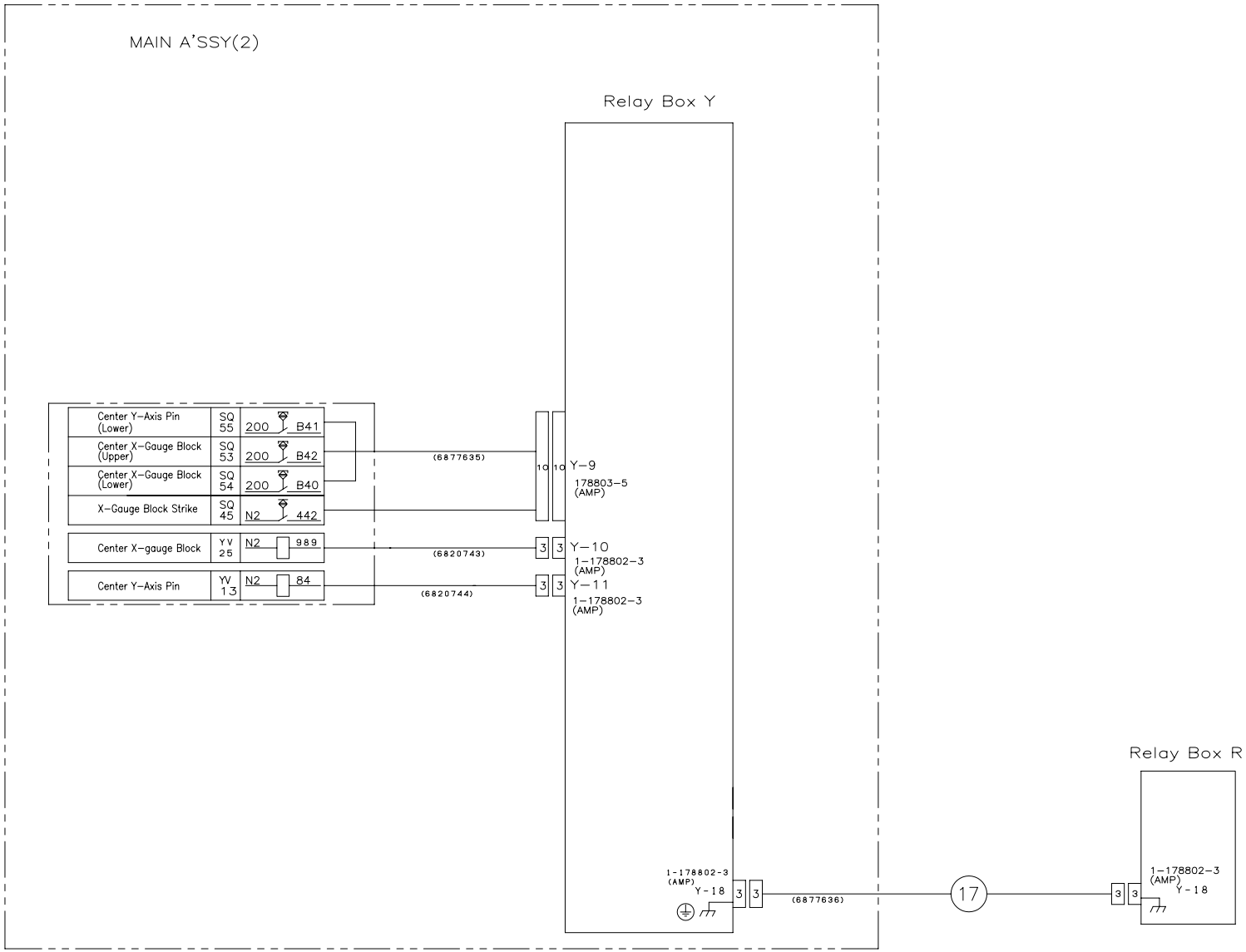

6877646
(6877711C)

Index	Code	Parts Name	Drawing No.	Type	Maker	Q'ty	Note
1	74575144	Relay Box (FC)	6824767			1	
2	74570030	Pan Head Screw with Washer	P334200115	M4X10(Chromate P-4)		4	
3	74575147	Relay Box (FC) Cover	6824768			1	
4	74575224	Packing (FC)	6824769			1	
5	74570033	Pan Head Screw with Washer	P334200134	M5X10(Chromate P-4)		4	
6	74575149	Housing Plate (FC)	6826465			1	
7	79573416	Hex Soc Cap Screw	P330210003	M5X10		2	
8	74386502	Rectangle Connector	P862042073	1-178802-3	AMP	2	
9	74386503	Plug Type Terminal	P862142036	175289-5	AMP	6	
10	74386505	Accessory For Connector	P862182002	900128-2	AMP	4	
11	74387020	Sponge Rubber	P230580063	CR-T20X20X60		2	
12	74569811	Pan Head Screw with Washer	P334200113	M4X6(Chromate P-4)		3	(Ground)
13	74575145	Bracket (F)	6824764			1	
14	79573416	Hex Soc Cap Screw	P330210003	M5X10		2	
15	74569809	Block Terminal	P864008047	MK4/16KRG	WEIDMULLER	1	
16	79316101	Hex Soc Cap Screw	P330200006	M3X15		2	
17	74419181	Cable Y-18	6877636			1	

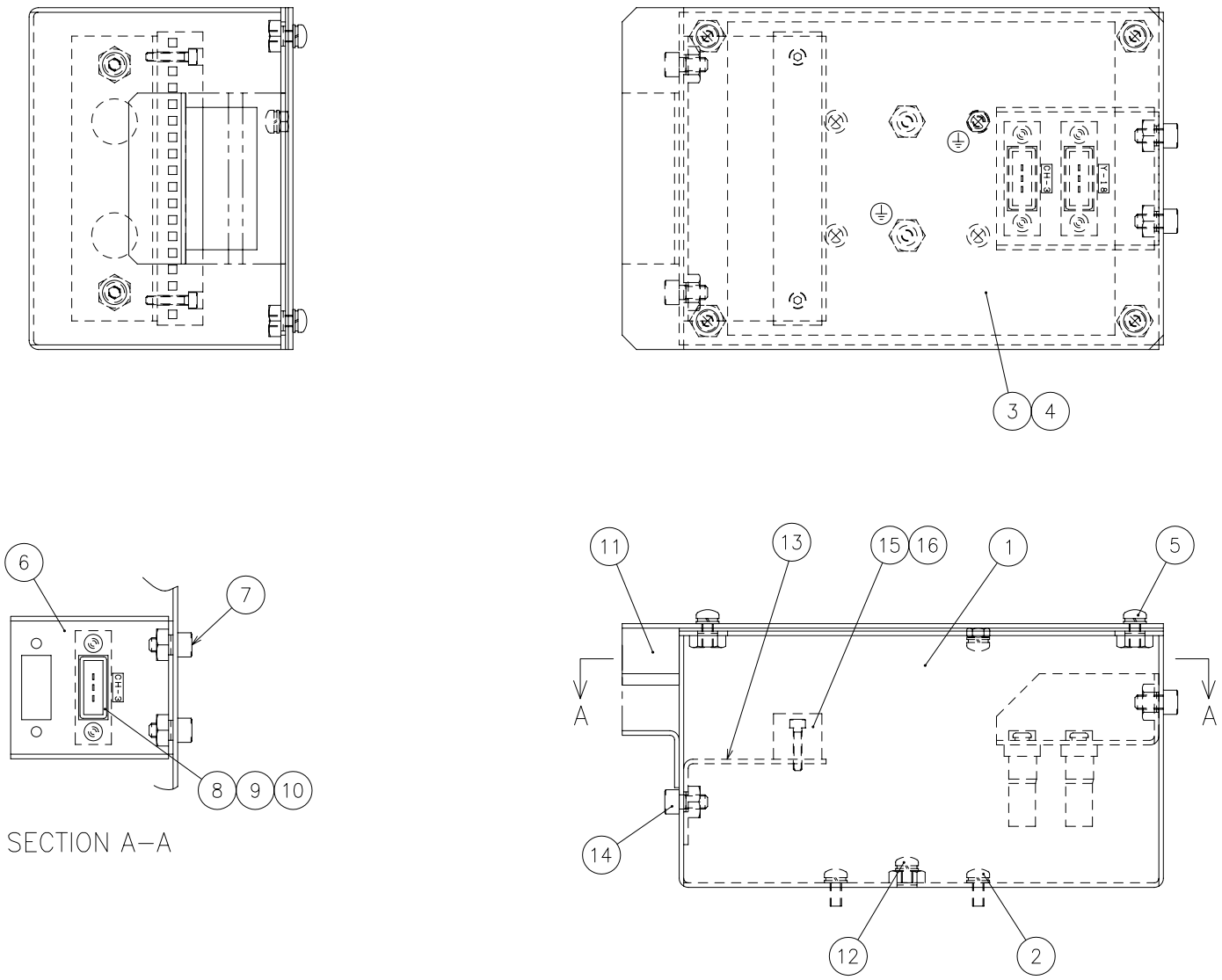

6824779

Unit No. 229
OL-C(13)

From Serial No.36102001 and after

Index	Code	Parts Name	Drawing No.	Type	Maker	Q'ty	Note
1	74575144	Relay Box (FC)	6824767			1	
2	74570030	Pan Head Screw with Washer	P334200115	M4X10(Chromate P-4)		4	
3	74575147	Relay Box (FC) Cover	6824768			1	
4	74575224	Packing (FC)	6824769			1	
5	74570033	Pan Head Screw with Washer	P334200134	M5X10(Chromate P-4)		4	
6	74575149	Housing Plate (FC)	6826465			1	
7	79573416	Hex Soc Cap Screw	P330210003	M5X10		2	
8	74386502	Rectangle Connector	P862042073	1-178802-3	AMP	1	
9	74386503	Plug Type Terminal	P862142036	175289-5	AMP	3	
10	74386505	Accessory For Connector	P862182002	900128-2	AMP	2	
11	74387020	Sponge Rubber	P230580063	CR-T20X20X60		2	
12	74569811	Pan Head Screw with Washer	P334200113	M4X6(Chromate P-4)		3	(Ground)
13	74575145	Bracket (F)	6824764			1	
14	79573416	Hex Soc Cap Screw	P330210003	M5X10		2	
15	74569809	Block Terminal	P864008047	MK4/16KRG	WEIDMULLER	1	
16	79316101	Hex Soc Cap Screw	P330200006	M3X15		2	

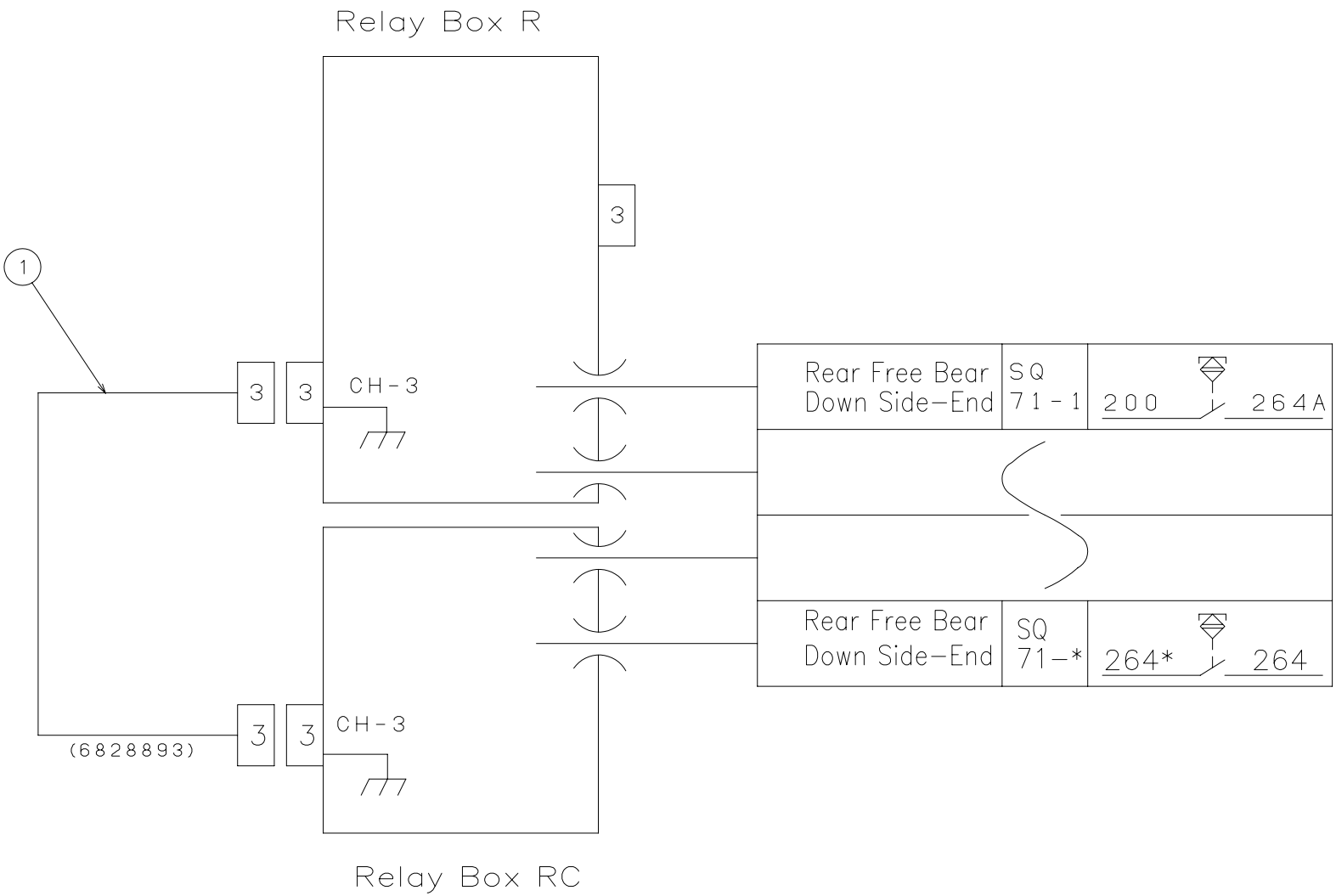

6676431
(6877711C)

Unit No. 230

OL-C(14)

From Serial No.36102001 and after

Index	Code	Parts Name	Drawing No.	Type	Maker	Q'ty	Note
1	74417293	Cable CH-3	6828893 A			1	

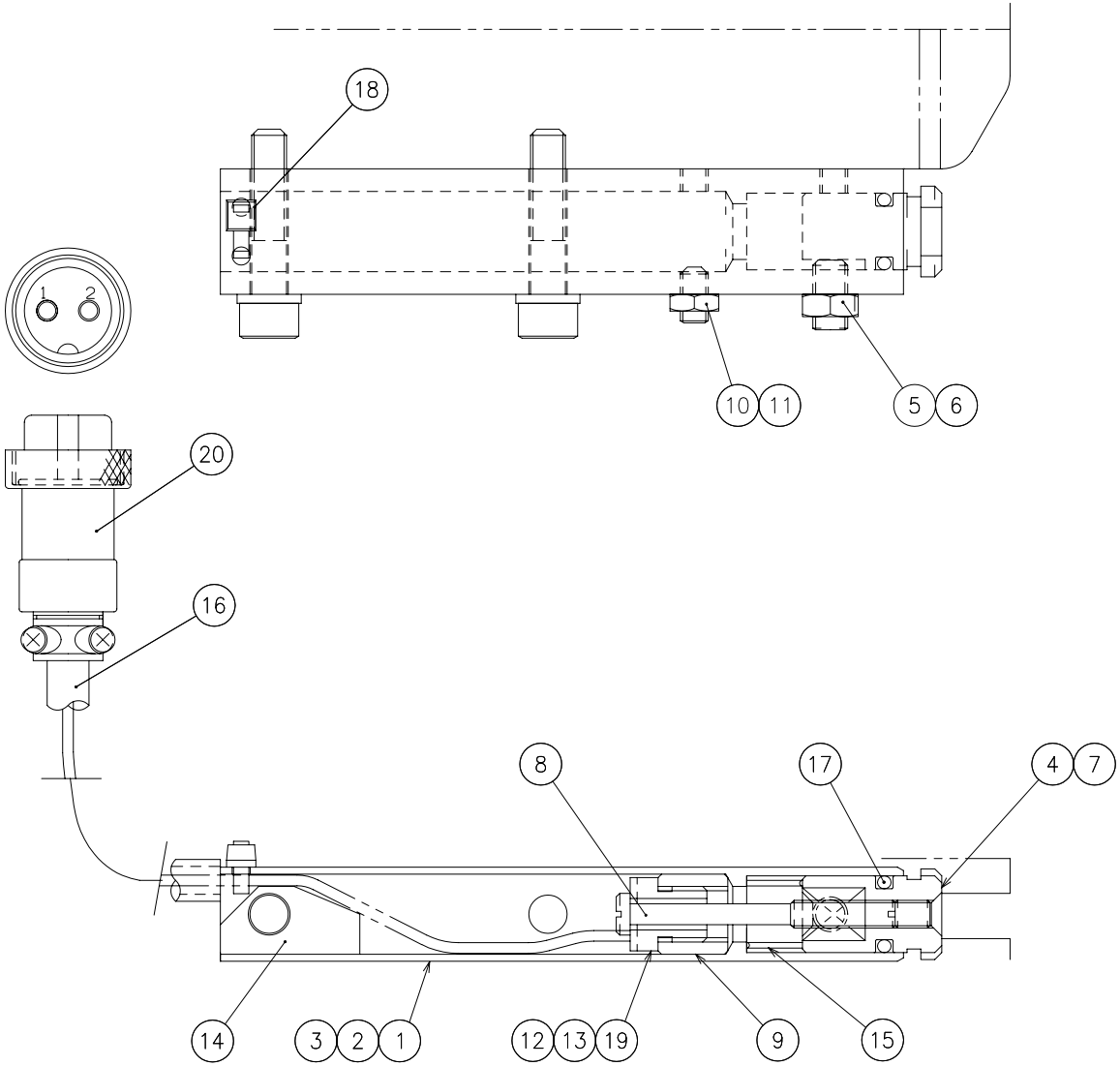

7420920E

From Serial No.36102001 and after

Index	Code	Parts Name	Drawing No.	Type	Maker	Q'ty	Note
1	74573823	Sensor Holder	1542194 B			1	
2	79316111	Hex Soc Cap Screw	P330210010	M5X25		2	
3	79567114	Spring Washer	P336050004	5		2	
4	74569468	Stopper	7420921 A			1	
5	36147503	Socket Set Screw	P330550018	M5X10(Flat Type)		1	
6	78186244	Nut	P332000016	M5(Thin)		1	
7	71102223	Socket Set Screw	P330550008	M4X5(Flat Type)		1	
8	74569469	Screw	1542196 A			1	
9	74379829	Insulator	0849943			1	
10	74305502	Socket Set Screw	P330590052	M4X8(Cup-end)		1	
11	74716224	Nut	P332000015	M4(Thin)		1	
12	74573699	Screw	1542197 C			1	
13	74569471	Vinyl Cord (P.V.C)	P342208004	ME15EU13-1.5M	JUNKOSHA	1	
14	74569262	Packing	7420922			1	
15	74573867	Spring	7831012		FUTABA HATSUJO	1	
16	31182101	Plastic Hose	P230218010	UH30-06(Black)-1.1M	JUNKOSHA	1	
17	74569264	O Ring	P590000249	4D-P7		1	
18	74569473	Cable Band	P381058104	SKB-85MM	KITAGAWA	1	
19	74569474	Tube	P230348005	A-1.5X0.2(Black)	SEI	1	

From Serial No.36102001 and after

Index	Code	Parts Name	Drawing No.	Type	Maker	Q'ty	Note
20	74569254	Metallic Connector	P860038003	PLT-162-P	MISUMI	1	

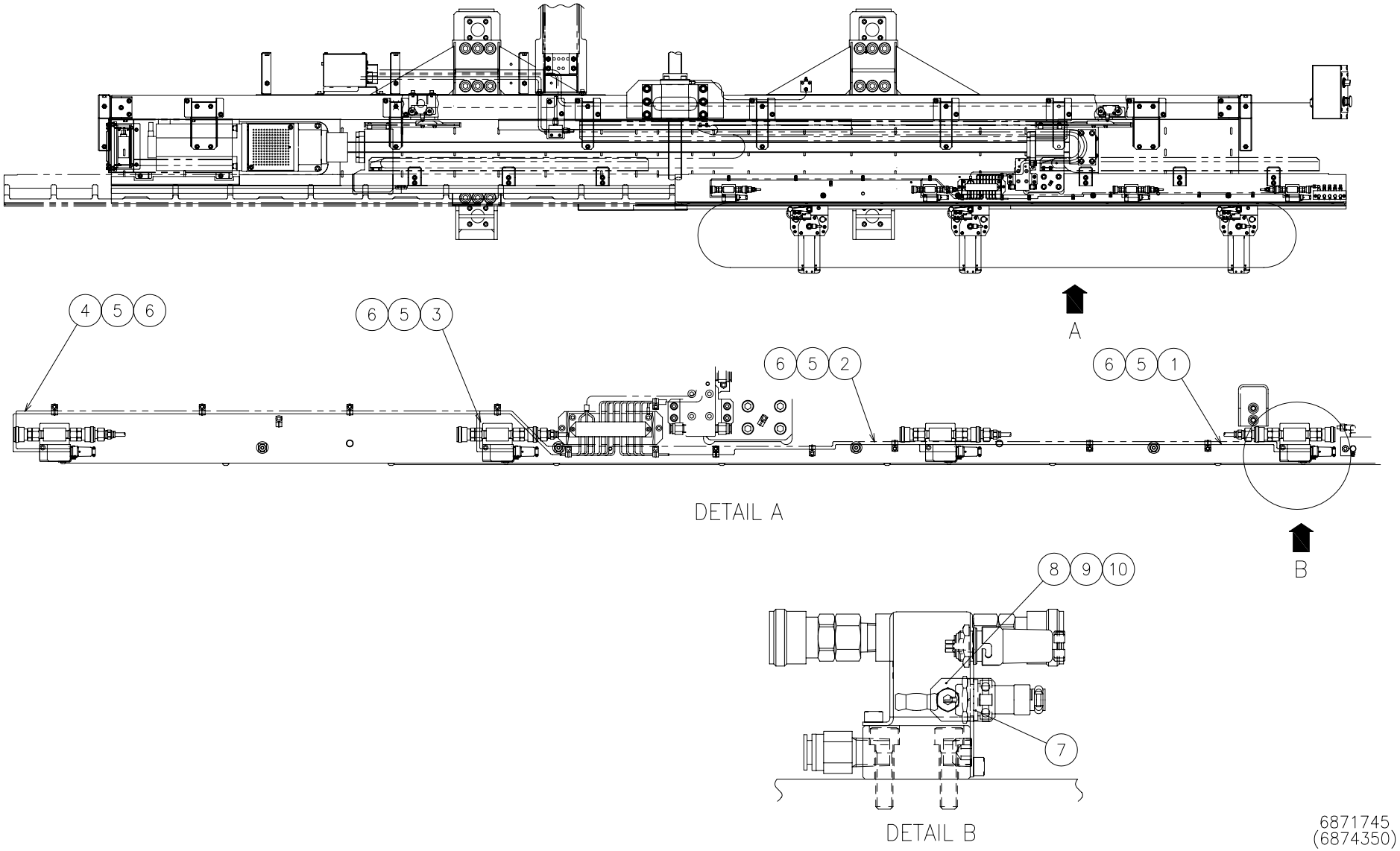
4 5 6
6 5 3
6 5 2
6 5 1
A
B
DETAIL A
8 9 10
7
DETAIL B
6871745
(6874350)

Unit No. 232

OL-C(16) From Serial No.36102001 and after

Index	Code	Parts Name	Drawing No.	Type	Maker	Q'ty	Note
1	74575170	Cabtire Cable	P342301945	VCTF0.5X2X800		1	
2	74575154	Cabtire Cable	P342301946	VCTF0.5X2X1400		1	
3	74416444	Cabtire Cable	P342301947	VCTF0.5X2X400		1	
4	74416445	Cabtire Cable	P342301948	VCTF0.5X2X1200		1	
5	75419408	Marker Tube	P869220208	0.5		8	
6	74310420	Cable Band	P381058020	CV-175N	SHIBAKEI	10	
7	74164041	Metallic Connector	P860038004	PLT-162-R	MISUMI	4	
8	74569256	Loose Stopper Plate	7420749			4	
9	36501002	Hex Soc Cap Screw	P330210002	M5X8		4	
10	74307821	Cable Band	P381058012	CV-150N	SHIBAKEI	4	

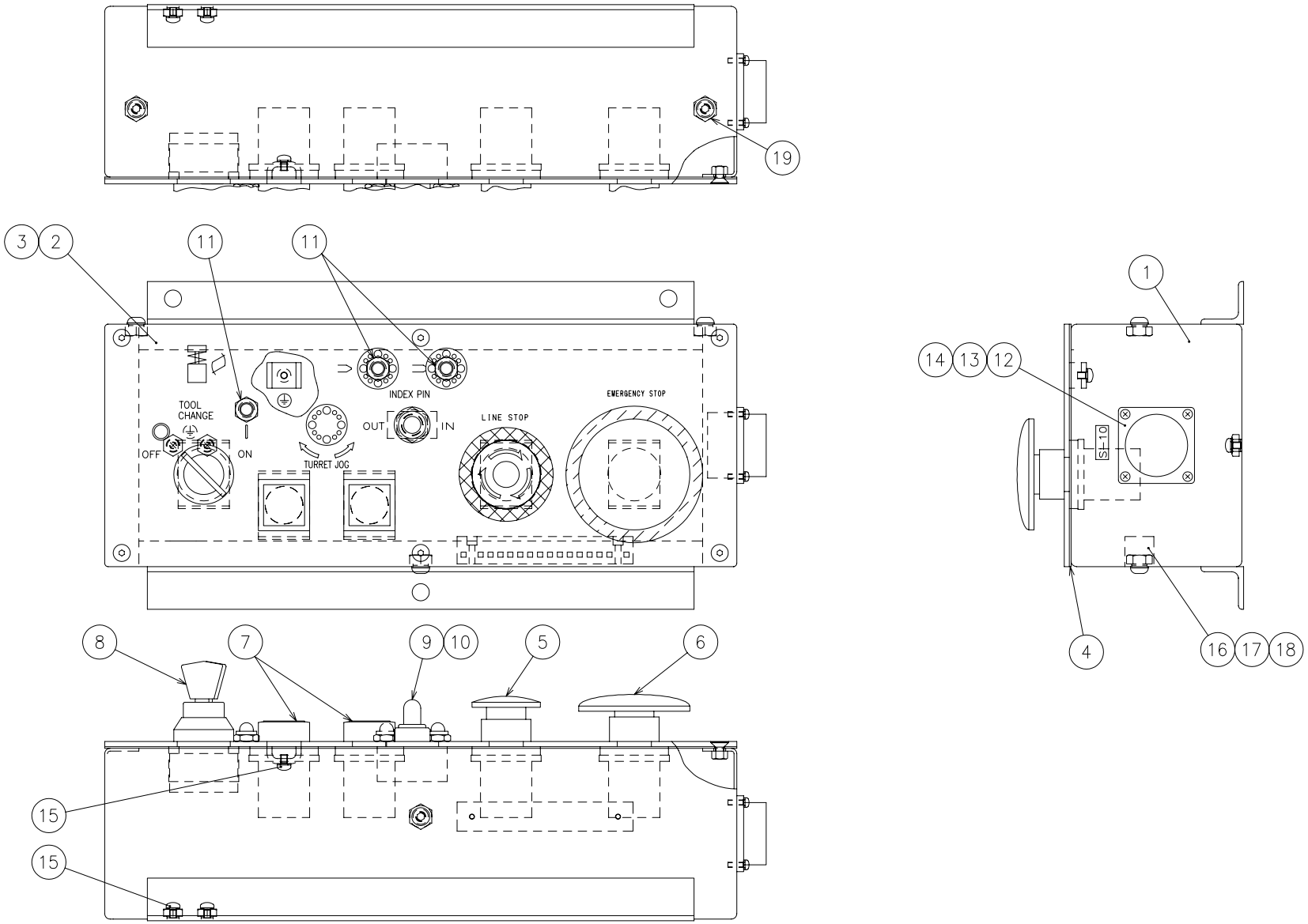
19
3
2
11
11
TOOL
CHANGE
OFF
ON
INDEX PIN
OUT
IN
TURRET JOG
LINE STOP
EMERGENCY STOP
1
14
13
12
SI-10
4
16
17
18
8
7
9
10
5
6
15
15

6870520

Index	Code	Parts Name	Drawing No.	Type	Maker	Q'ty	Note
1	74570045	Sub Control Box (CE)	6820270			1	
2	74416460	Legend Plate (Sub Control)	6870528			1	for EU,EXP
2	74419503	Legend Plate (Sub Control)	6817591			1	Chinese
3	79321267	Flat Head Bolt	P334520006	M5X10		6	
4	74570047	Packing (CE Sub-Operation Box)	6820272			1	
5	74568712	Push Switch	P821124128	AR30V3R-01BZ235	FUJI Electric	1	
6	74570048	Push Switch	P821124129	AR30V1R-02R-Z037	FUJI Electric	1	
7	74570049	Push Switch	P821084087	AR22F0S-10W-Z037	FUJI Electric	2	
8	74415122	Key Select Switch	P820014100	AR30JR-2D01A	FUJI Electric	1	
9	74568080	Toggle Switch	7833079	SDT-110G-02SCAU	SHINDEN	1	
10	75419224	Accessory For Toggle Switch	P823088001	WD1911	MATSUSHITA	1	
11	74381663	Indicator Apparatus	P843018002	BD-1402G	OKAYA	3	
12	74382195	Plastic R Connector	P862032008	206838-1	AMP	1	24P
13	75419126	Plug Type Terminal	P862142012	66103-2	AMP	24	
14	74569454	Pan Head Screw with Washer	P334200145	M3X8(Chromate P-4)		4	
15	74569811	Pan Head Screw with Washer	P334200113	M4X6(Chromate P-4)		3	
16	74569809	Block Terminal	P864008047	MK4/16KRG	WEIDMULLER	1	
17	74386496	Plug Type Terminal	P862148024	H0.75/15	WEIDMULLER	5	
18	79316101	Hex Soc Cap Screw	P330200006	M3X15		2	

Unit No. 233

OL-C(17)

From Serial No.36102001 and after

Index	Code	Parts Name	Drawing No.	Type	Maker	Q'ty	Note
19	36379029	Button Head Screw	P334500013	M6X10		3	

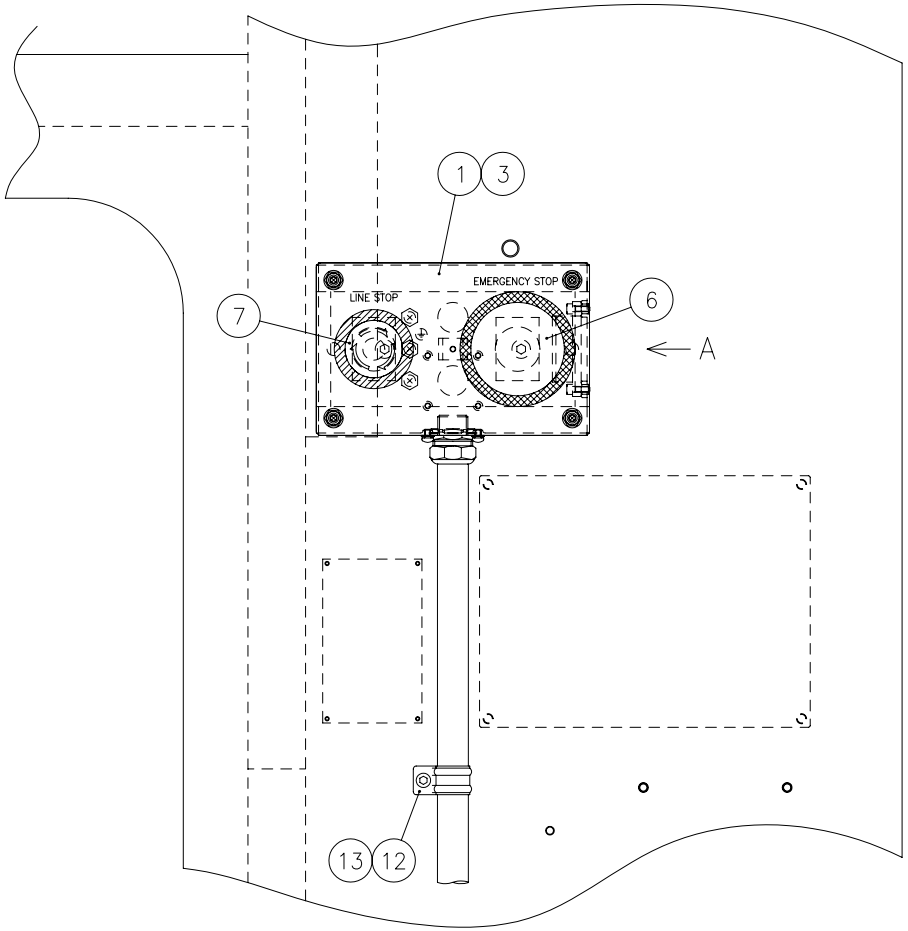

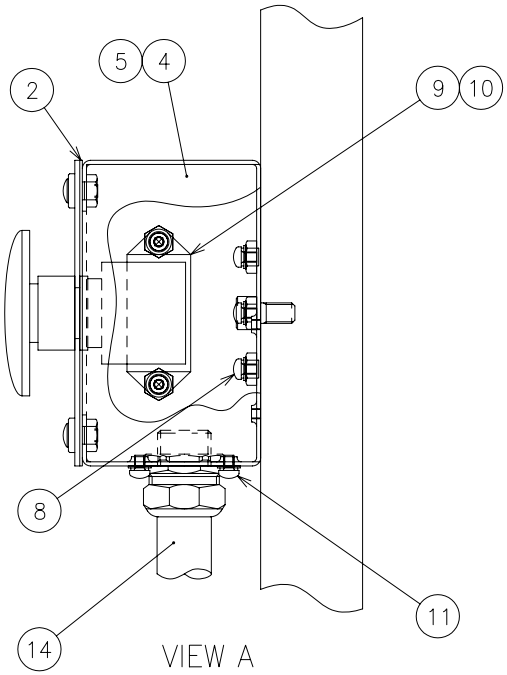

6870527
6879488

From Serial No.36102001 and after

Index	Code	Parts Name	Drawing No.	Type	Maker	Q'ty	Note
1	74416469	Legend Plate(SW.Operating)(A)	6824977			1	for EU,EXP
1	74419504	Legend Plate(SW.Operating)(A)	6817592			1	Chinese
2	74416468	Packing	6824981			1	
3	74722794	Knob Bolt	P338048001	Faced Screw -NO.2-M5X10	Tokyo Byora	4	
4	74416474	Switch Operating Box L	6870518			1	
5	79565423	Hex Soc Cap Screw	P330230004	M8X15		2	
6	74570048	Push Switch	P821124129	AR30V1R-02R-Z037	FUJI Electric	1	
7	74568712	Push Switch	P821124128	AR30V3R-01BZ235	FUJI Electric	1	
8	74569811	Pan Head Screw with Washer	P334200113	M4X6(Chromate P-4)		4	(Ground)
9	74386516	Rectangle Connector	P862138054	KS4KRG/D4	WEIDMULLER	1	
10	86611902	Hex Soc Cap Screw	P330200016	M4X12		2	
11	74569811	Pan Head Screw with Washer	P334200113	M4X6(Chromate P-4)		4	
12	74732128	Saddle For Conduct	P381017093	CH-15(D6.2)	DAIWA DENGYO	1	
13	79564305	Hex Soc Cap Screw	P330220006	M6X15		1	
14	74419182	Cable L	6878339			1	

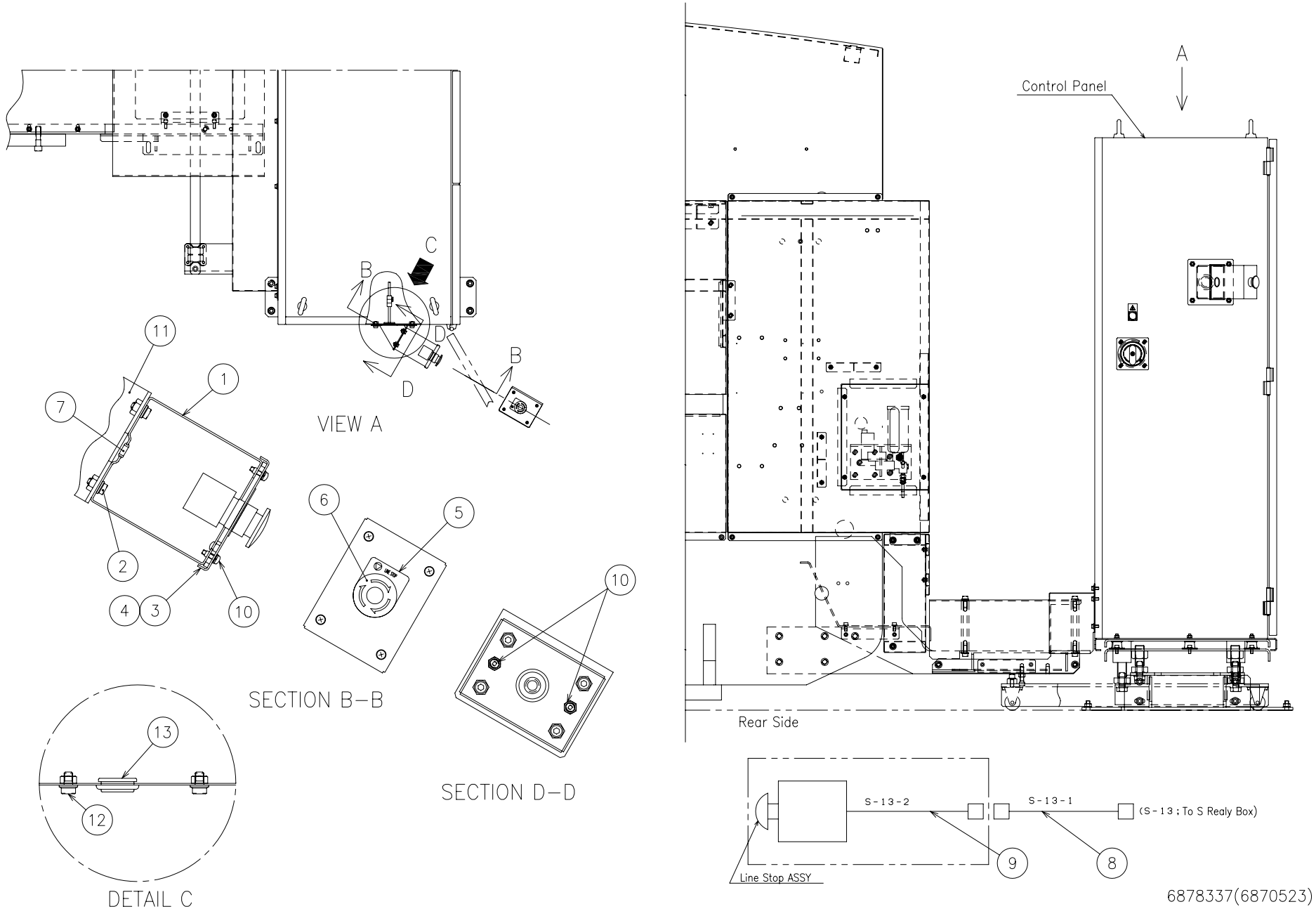
VIEW A
SECTION B–B
SECTION D–D
DETAIL C
Control Panel
Rear Side
Line Stop ASSY
S-13-2
S-13-1
(S-13 ; To S Realy Box)
6878337(6870523)

From Serial No.36102001 and after

Index	Code	Parts Name	Drawing No.	Type	Maker	Q'ty	Note
1	74572579	Push Button Box	6018276 A			1	
2	74731367	Flange Socket Bolt	P330468026	M6X12	NISSAN NEJI	4	
3	74572580	Cap	6018277 A			1	
4	74575288	Pan Head Screw with Washer	P334200117	M4X15(Chromate P-4)		4	
5	74307644	Legend Plate	6502736			1	for EU,EXP
5	74419506	Legend Plate	6817594			1	Chinese
6	74568712	Push Switch	P821124128	AR30V3R-01BZ235	FUJI Electric	1	
7	74380555	Bush For Cable	P229112017	C-30-NG-79-E	TAKIGEN	1	
8	74416458	Cable S-13-1	6811424			1	
9	74416459	Cable S-13-2	6811441			1	
10	74569457	Pan Head Screw with Washer	P334200114	M4X8(Chromate P-4)		3	(Ground)
11	74416457	Line Stopper Bracket	6827674			1	
12	75420638	Flange Socket Bolt	P330468018	M8X12	NISSAN NEJI	4	
13	74732487	Bush For Cable	P229112039	C-30-SG-30A	TAKIGEN	1	

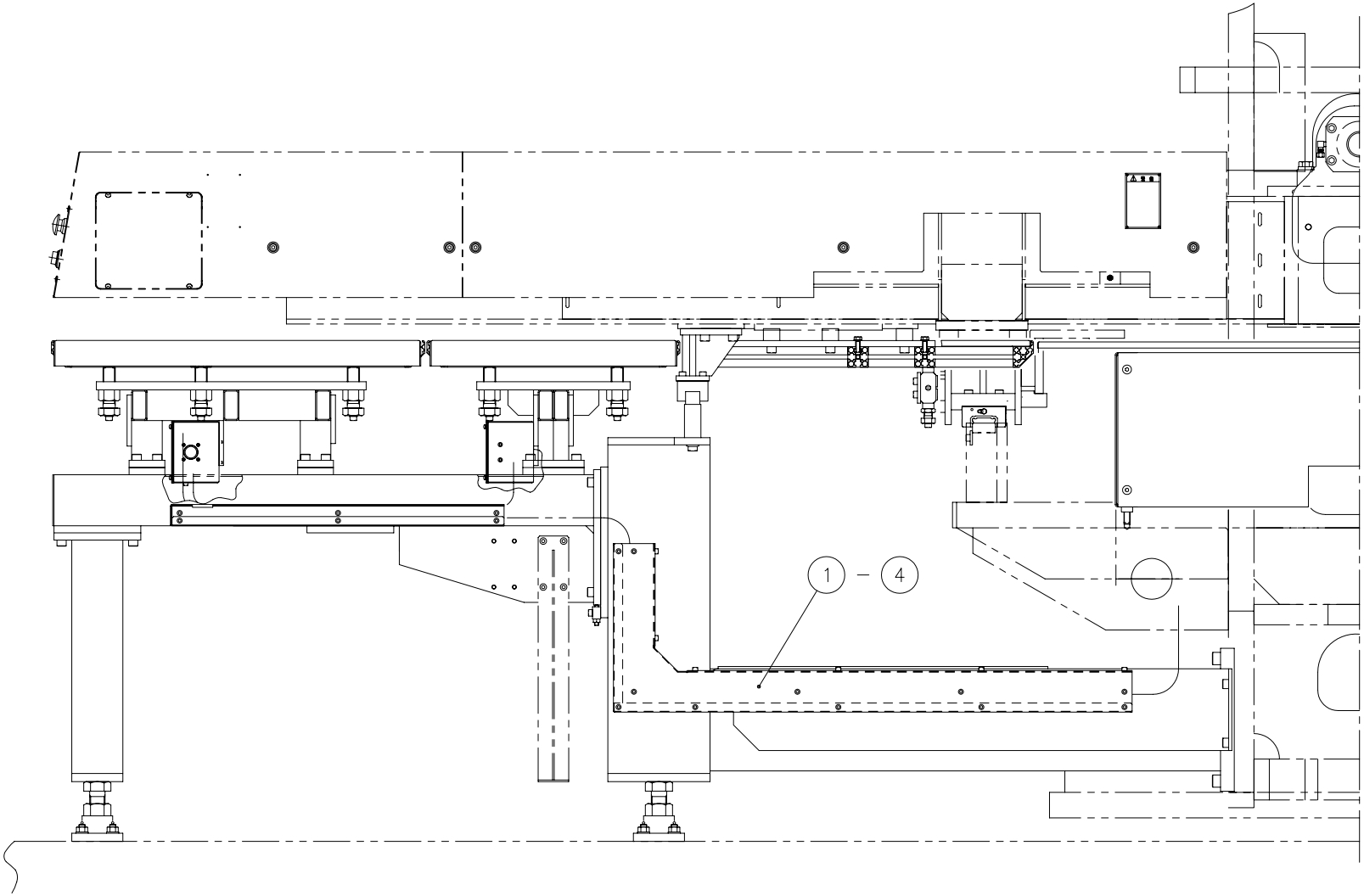

6871034

Unit No. 236
OL-C(20)

From Serial No.36102001 and after

Index	Code	Parts Name	Drawing No.	Type	Maker	Q'ty	Note
1	74575150	Duct (L)	6823854			1	
2	79564305	Hex Soc Cap Screw	P330220006	M6X15		5	
3	74575235	Duct Cover (L)	6823857			1	
4	79564305	Hex Soc Cap Screw	P330220006	M6X15		12	

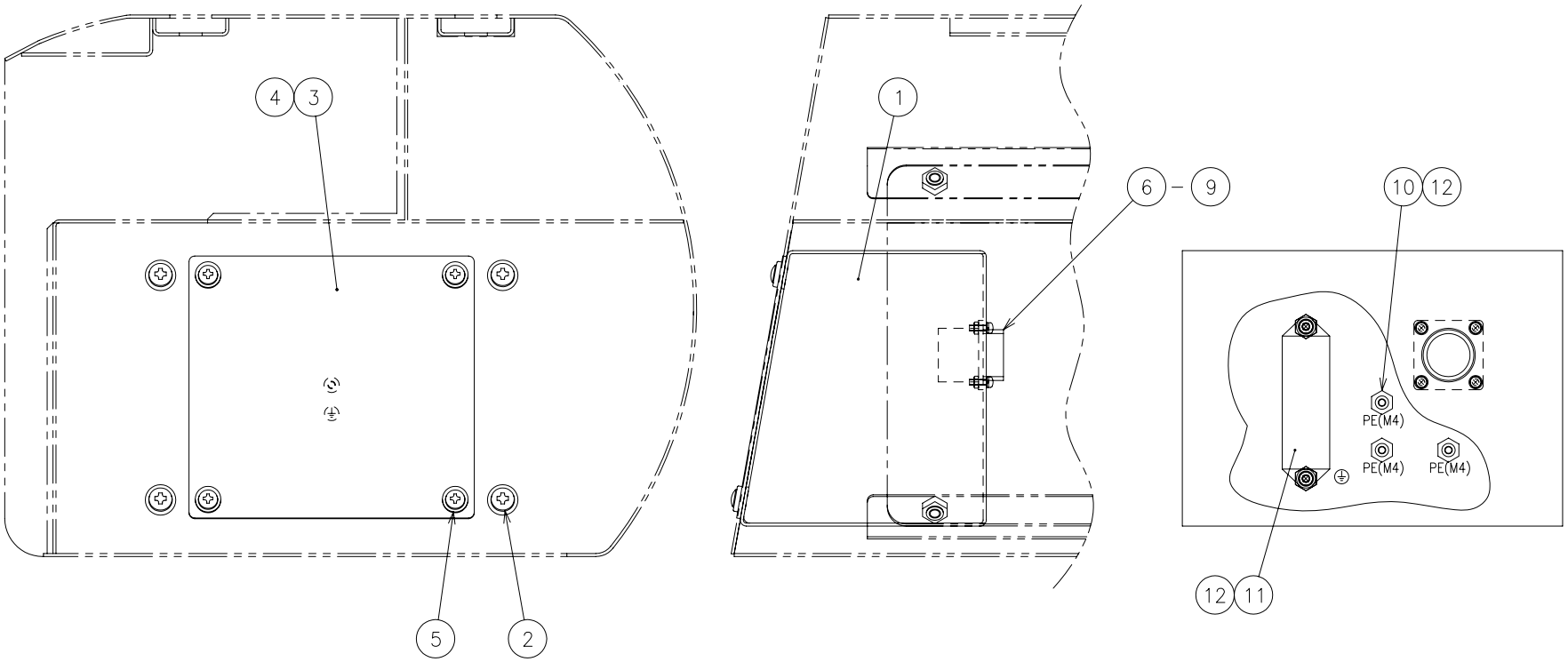

6877387
(6877515)

Unit No. 237

OL-C(21) From Serial No.36102001 and after

Index	Code	Parts Name	Drawing No.	Type	Maker	Q'ty	Note
1	74417273	CR Control Box	6874522 A			1	
2	74722795	Knob Bolt	P338048002	Faced Screw -NO.3-M6X15	Tokyo Byora	4	
3	74417274	CR Box Cover	6874527			1	
4	74417275	Packing	6874525			1	
5	74722794	Knob Bolt	P338048001	Faced Screw -NO.2-M5X10	Tokyo Byora	4	
6	74521705	Plastic R Connector	P862032003	206036-1	AMP	1	
7	74384510	Plug Type Terminal	P862142020	66400-1	AMP	9	
8	74570051	Pan Head Screw with Washer	P334200109	M3X10(Chromate P-4)		4	
9	74307616	Nut	P332000001	M3		4	
10	74569811	Pan Head Screw with Washer	P334200113	M4X6(Chromate P-4)		4	
11	74386506	Rectangle Connector	P862138056	KS6KRG/D6	WEIDMULLER	1	
12	86620301	Hex Soc Cap Screw	P330200018	M4X15		2	

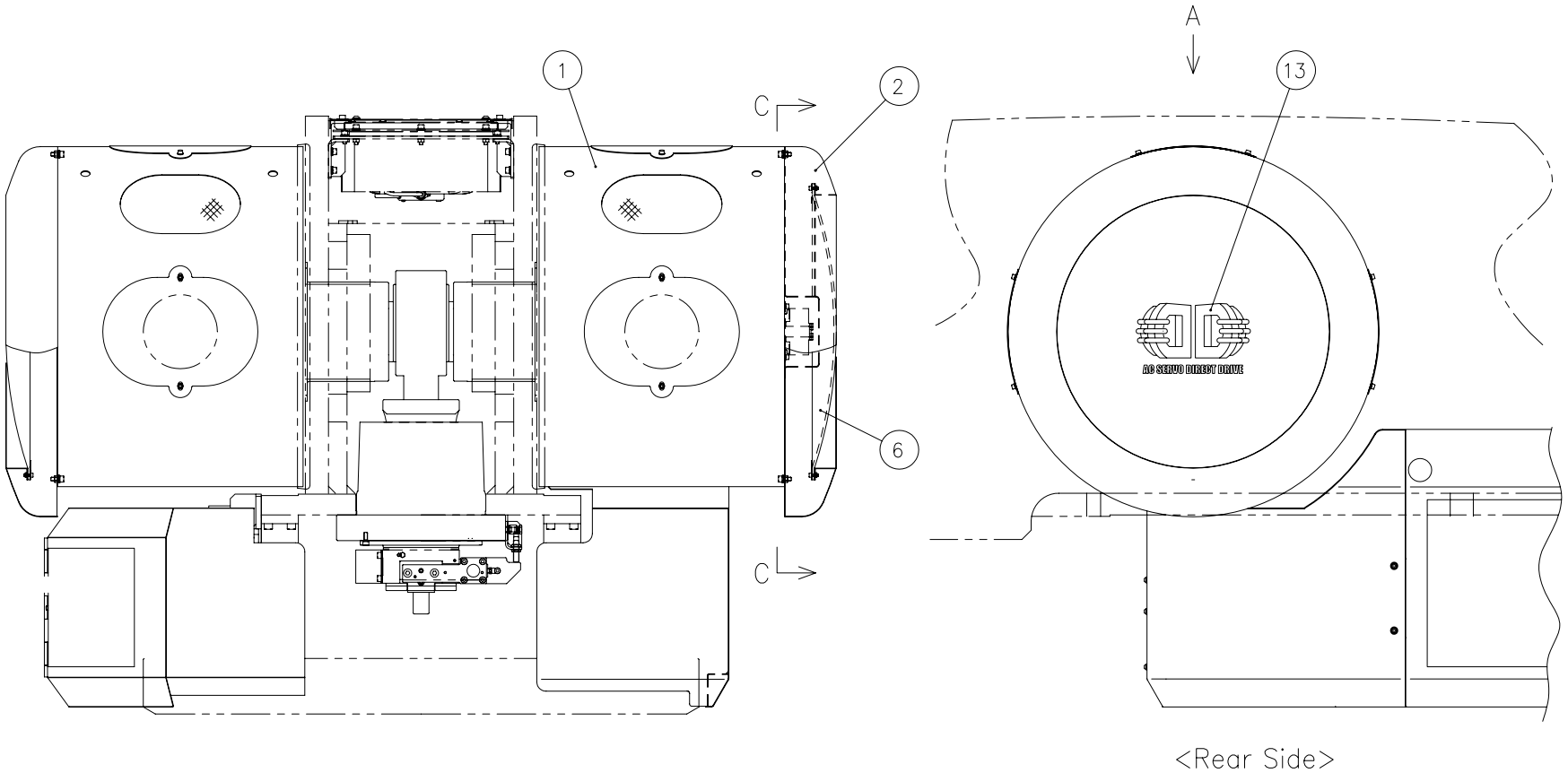

6876446
(6879410)

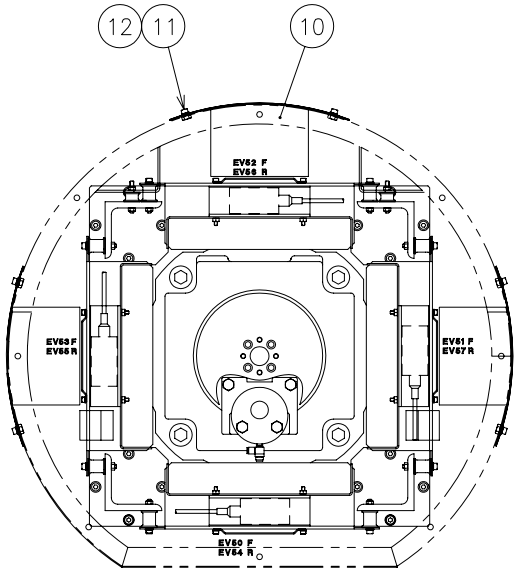

SECTION B–B

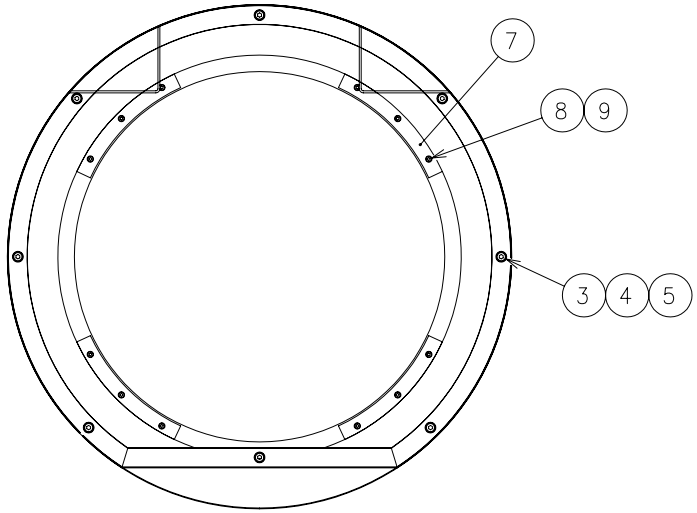

SECTION C–C

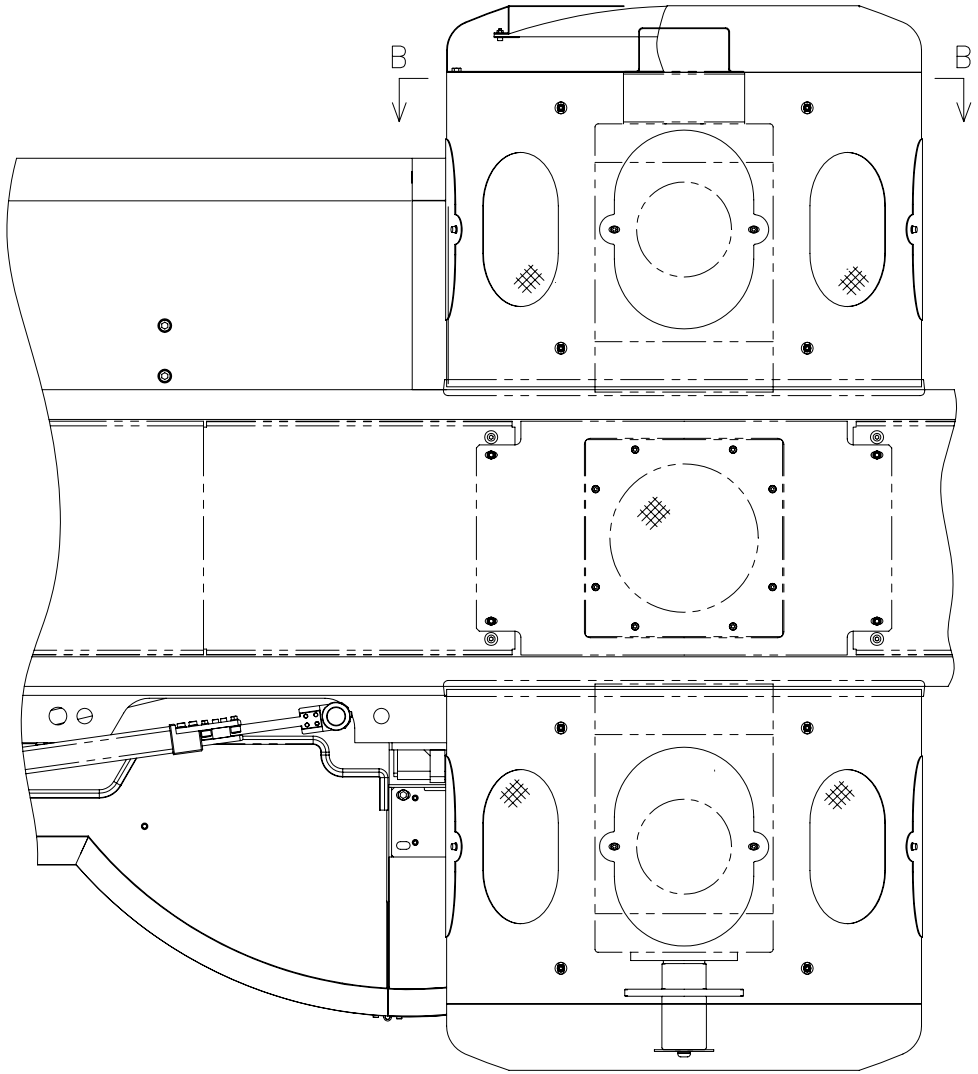

VIEW A

6876446
(6879410)

Unit No. 238

OL-C(22) From Serial No.36102001 and after

Index	Code	Parts Name	Drawing No.	Type	Maker	Q'ty	Note
1	74419183	Drive Cover (Cylindrical) R	6876454 A			1	
2	74415356	Drive Cover (Cap)	6828452			1	
3	79564804	Hex Soc Cap Screw	P330230006	M8X20		5	
4	86610326	Spring Washer	P336050006	8		5	
5	79567109	Washer	P336000006	8(Regular Round)		5	
6	74415344	Drive Cover (Window)	6828453			1	
7	74415351	Window Support	6828454			4	
8	79316109	Hex Soc Cap Screw	P330210006	M5X15		12	
9	31182981	Washer	P336000080	5(Regular Round)		12	
10	74415918	Maintenance Cap (Drive Cover)	6829173			3	
11	79565201	Hex Soc Cap Screw	P330220004	M6X12		6	
12	79565419	Washer	P336000005	6(Regular Round)		6	
13	74417167	DD Mark 250	6170100			1	

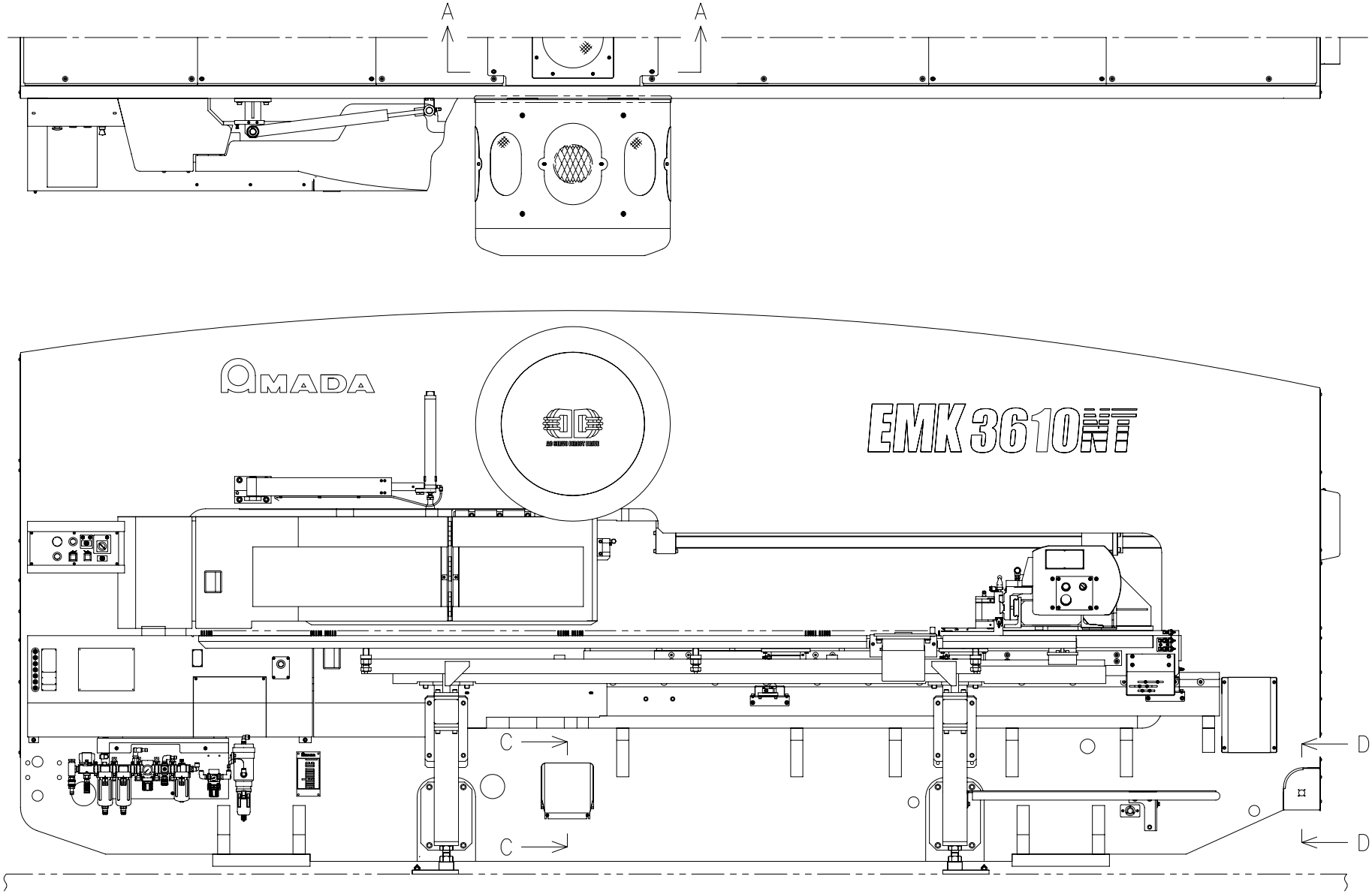

6880107
(6877685#1B)
(6877685#2B)

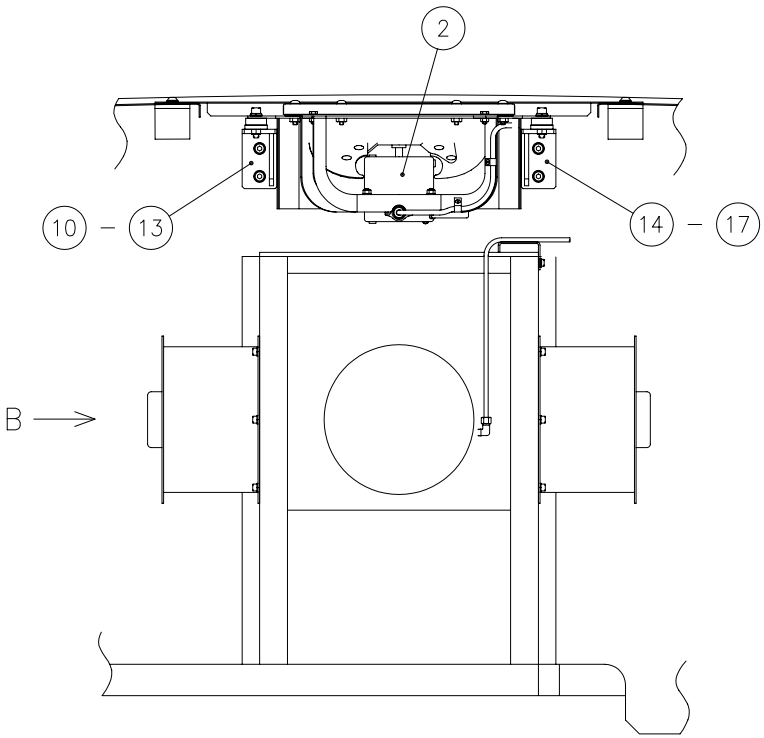

SECTION A–A

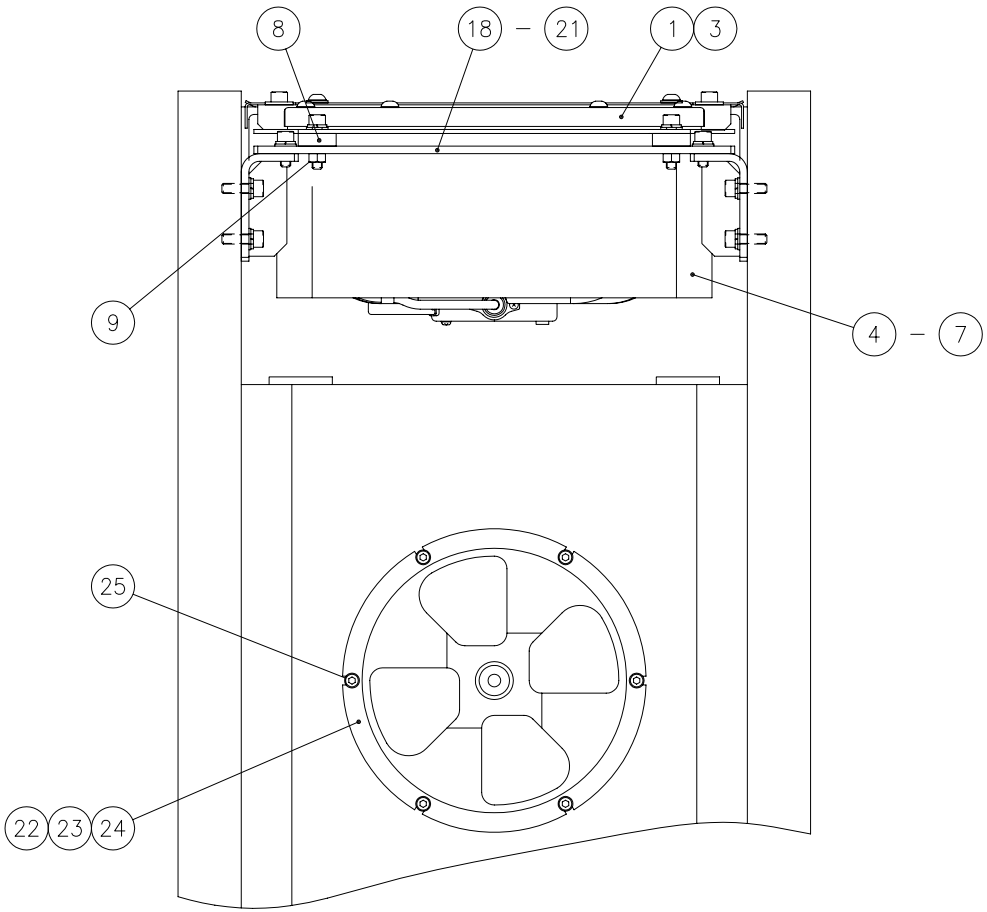

VIEW B

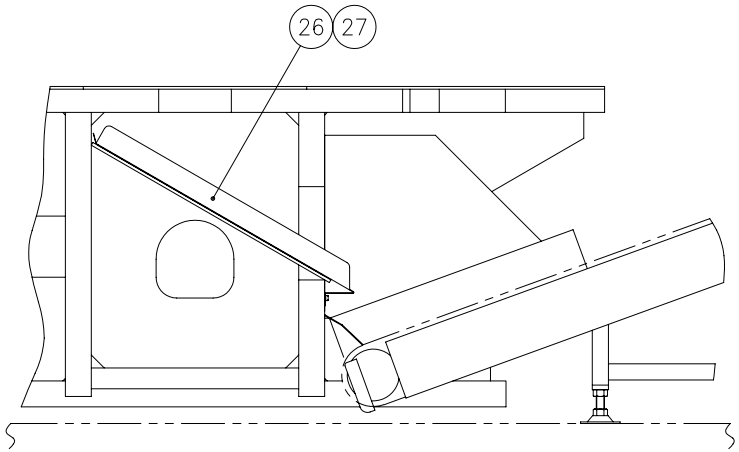

SECTION C–C

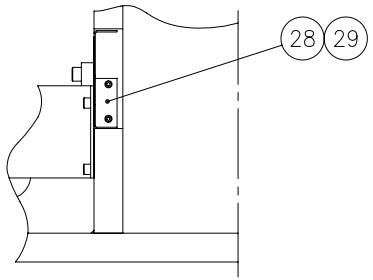

SECTION D–D

6880107
(6877685#1B)
(6877685#2B)

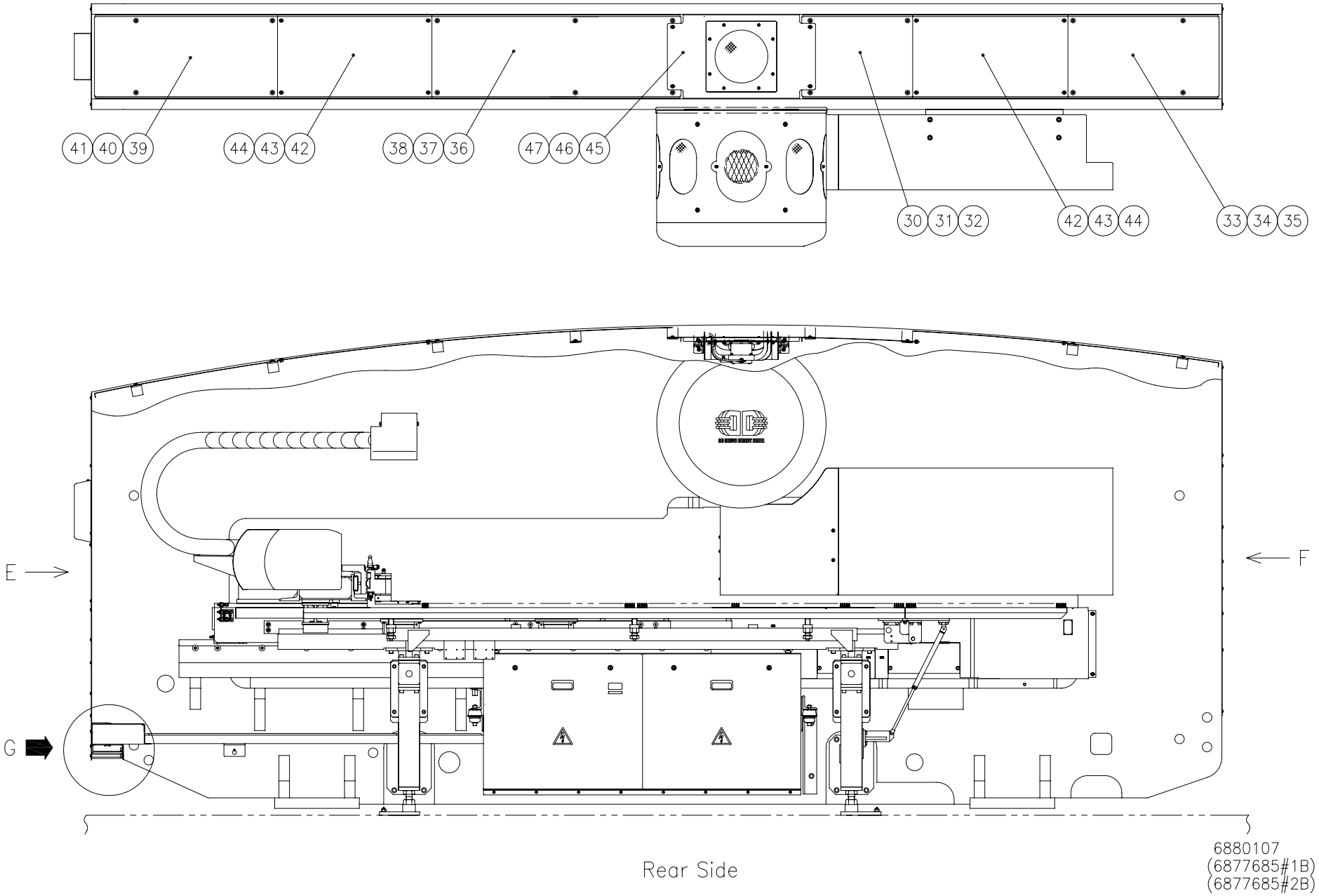
41 40 39
44 43 42
38 37 36
47 46 45
30 31 32
42 43 44
33 34 35
E
F
G
Rear Side
6880107
(6877685#1B)
(6877685#2B)

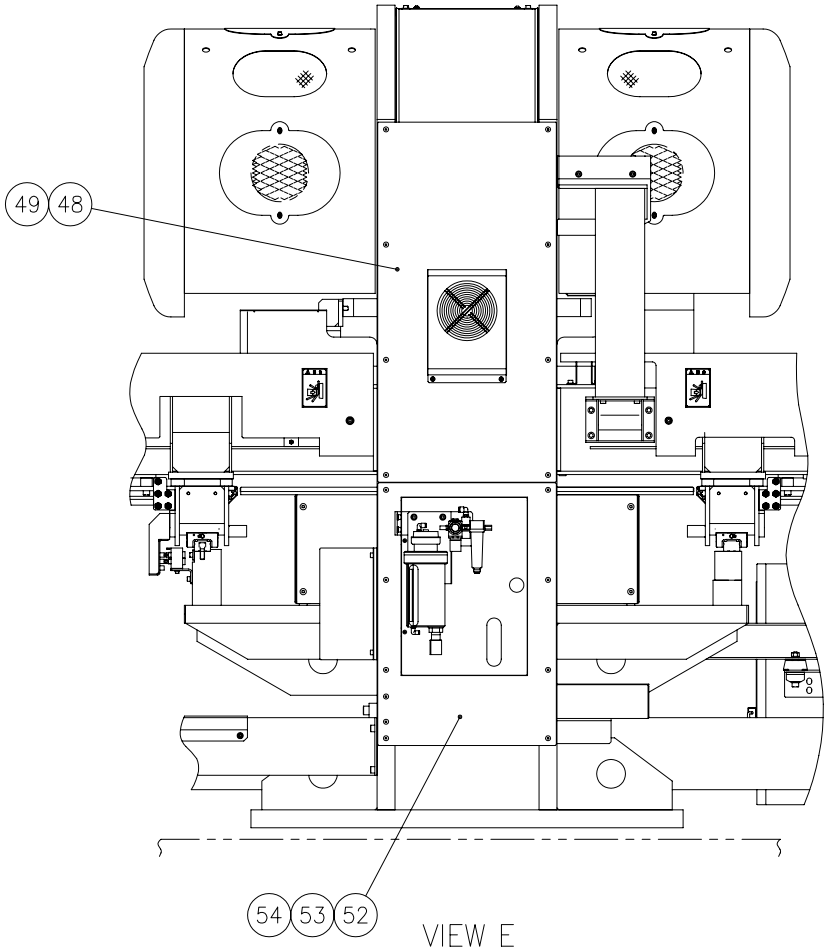

VIEW E

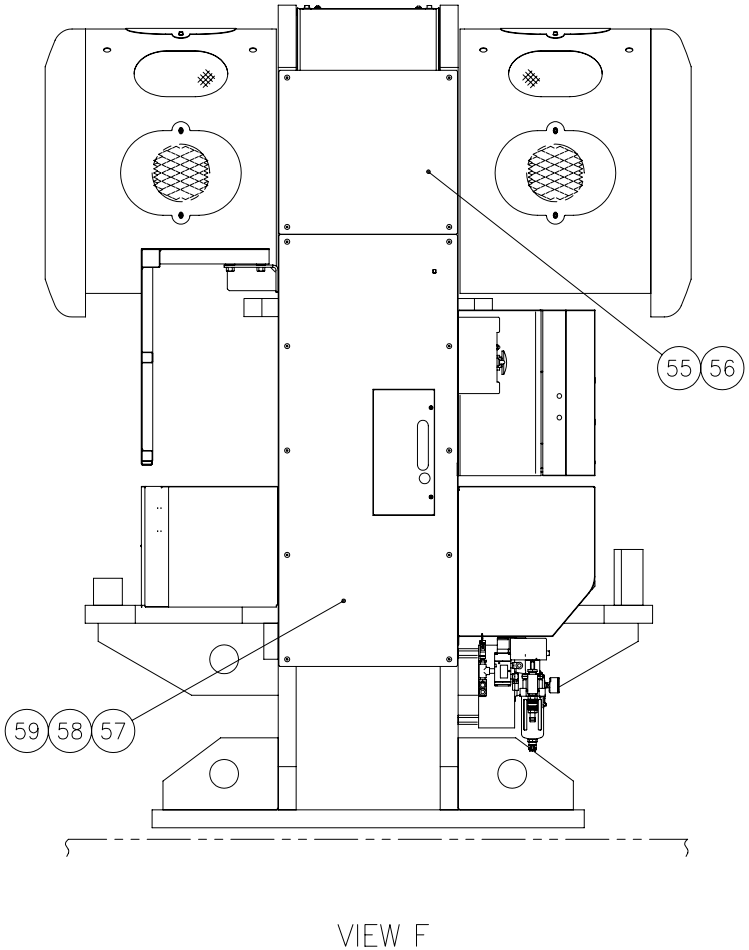

VIEW F

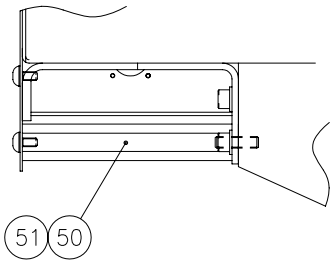

DETAIL G

6880107
(6877685#1B)
(6877685#2B)

Index	Code	Parts Name	Drawing No.	Type	Maker	Q'ty	Note
1	74379001	Fan Cover	0819106 A			1	
2	74415904	Fan	7834134	PN-254-002SHA	HITACHI	1	
3	74563179	Button Head Screw	P334500062	M6X30		8	
4	74415906	Top Cover	6828479			1	
5	10443022	Hex Soc Cap Screw	P330230009	M8X35		4	
6	86610326	Spring Washer	P336050006	8		4	
7	79567109	Washer	P336000006	8(Regular Round)		4	
8	74417105	Antivibration Rubber	6876550			4	
9	74300504	Nut	P332000005	M8		4	
10	74417106	Base Bracket (1)	6876551			2	
11	79566121	Hex Soc Cap Screw	P330230007	M8X25		4	
12	86610326	Spring Washer	P336050006	8		4	
13	79567109	Washer	P336000006	8(Regular Round)		4	
14	74417107	Base Bracket (2)	6876552			2	
15	79566121	Hex Soc Cap Screw	P330230007	M8X25		4	
16	86610326	Spring Washer	P336050006	8		4	
17	79567109	Washer	P336000006	8(Regular Round)		4	
18	74417108	Bar	6876553			2	
19	79564804	Hex Soc Cap Screw	P330230006	M8X20		4	

Index	Code	Parts Name	Drawing No.	Type	Maker	Q'ty	Note
20	86610326	Spring Washer	P336050006	8		4	
21	79567109	Washer	P336000006	8(Regular Round)		4	
22	74415263	Axial Flow Blower	7833082 A	SF200-40-2	TOAMEC	2	
23	74415264	Seal Flange	6013896 A			2	
24	74415265	Oil Seal	P590175019	V-8A	SIEGLING	2	
25	45252001	Flange Socket Bolt	P330460003	M6X15		12	
26	74577402	Rubber Plate	6812399 A			1	
27	45252001	Flange Socket Bolt	P330460003	M6X15		2	
28	74419092	Connector Cover	6877687 A			1	
29	45252001	Flange Socket Bolt	P330460003	M6X15		2	
30	74418303	Top Cover (Left 1)	6875294			1	
31	10569021	Button Head Screw	P334500019	M8X15		4	
32	74415270	Washer (M8)	6828456			4	
33	74418304	Top Cover (Left 2)	6875295			1	
34	10569021	Button Head Screw	P334500019	M8X15		4	
35	74415270	Washer (M8)	6828456			4	
36	74418305	Top Cover (Right 1)	6875292			1	
37	10569021	Button Head Screw	P334500019	M8X15		6	
38	74415270	Washer (M8)	6828456			6	

Index	Code	Parts Name	Drawing No.	Type	Maker	Q'ty	Note
39	74418306	Top Cover (Right 2)	6875293			1	
40	10569021	Button Head Screw	P334500019	M8X15		4	
41	74415270	Washer (M8)	6828456			4	
42	74418307	Top Cover (Cap)	6875291			2	
43	10569021	Button Head Screw	P334500019	M8X15		8	
44	79567109	Washer	P336000006	8(Regular Round)		8	
45	74418308	Top Cover (Inner)	6829376			1	
46	10569021	Button Head Screw	P334500019	M8X15		4	
47	79567109	Washer	P336000006	8(Regular Round)		4	
48	74418309	Right Side Cover (Upper)	6875296 A			1	
49	74569504	Button Head Screw	7830643		MOURI	8	
50	74418991	Stud (Side Cover)	6875301	H22		1	
51	13240902	Socket Set Screw	P330550043	M8X30(Flat-end)		1	
52	74418310	Right Side Cover (Lower)	6877688			1	
53	74569504	Button Head Screw	7830643		MOURI	8	
54	74300313	Knob Bolt	6018086			2	
55	74419469	Left Side Cover (Upper) PDC	6875300			1	
56	74569504	Button Head Screw	7830643		MOURI	4	
57	74419470	Left Side Cover (Lower)	6877686 B			1	

Index	Code	Parts Name	Drawing No.	Type	Maker	Q'ty	Note
58	74569504	Button Head Screw	7830643		MOURI	10	
59	74300313	Knob Bolt	6018086			2	

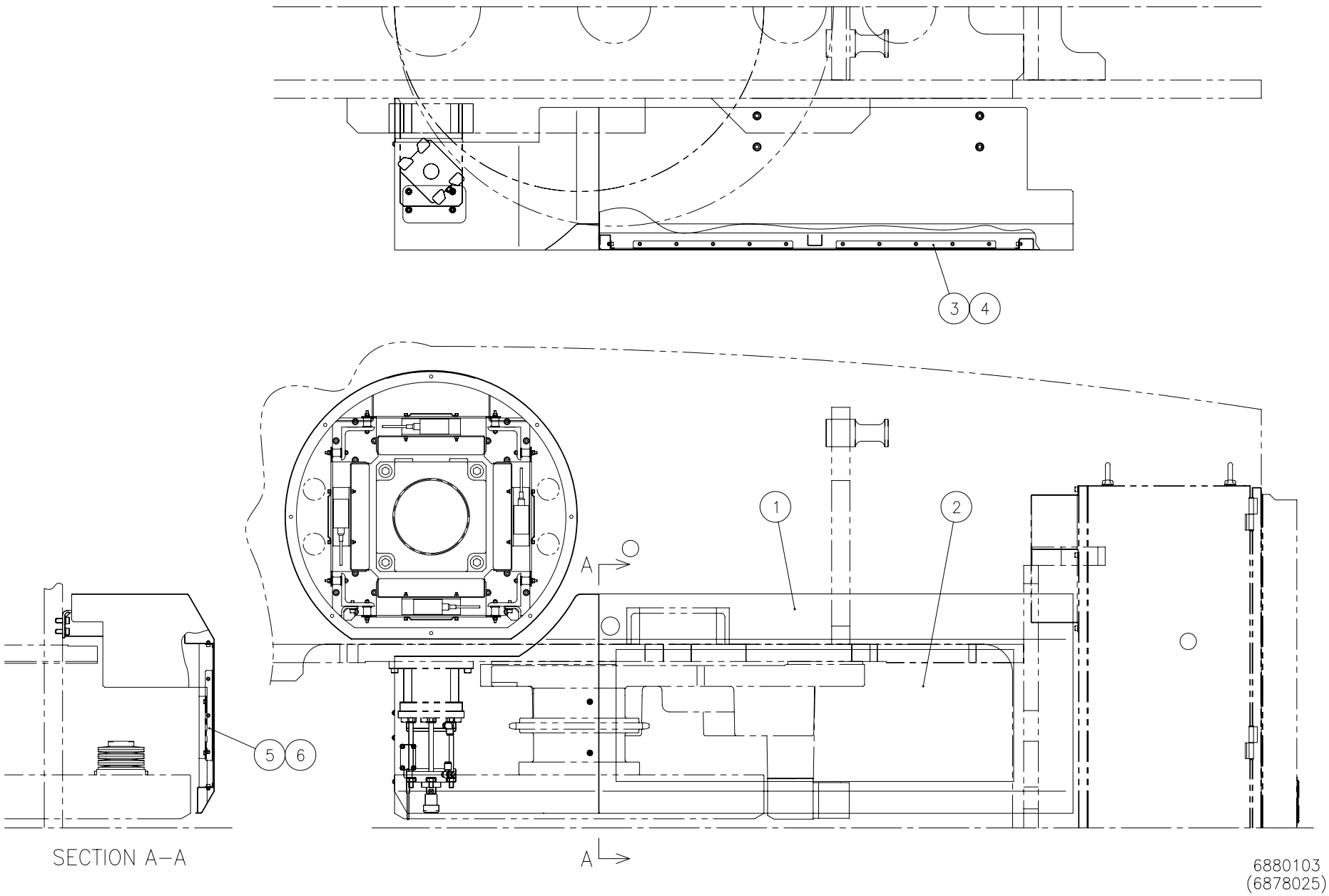
3
4
1
2
A
A
5
6
SECTION A–A
6880103
(6878025)

Unit No. 240

US Line (CR)-C(2) From Serial No.36102001 and after

Index	Code	Parts Name	Drawing No.	Type	Maker	Q'ty	Note
1	74419471	Rear Turret Cover (Right) CR	6880104			1	
2	74810009	Panel Cover (1)	3806911 B			1	
3	74415304	Panel Bracket (3)	6828633			4	
4	74570510	Flange Socket Bolt	P330460006	M5X10		20	
5	74415305	Panel Bracket (4)	6828634			2	
6	74570510	Flange Socket Bolt	P330460006	M5X10		6	

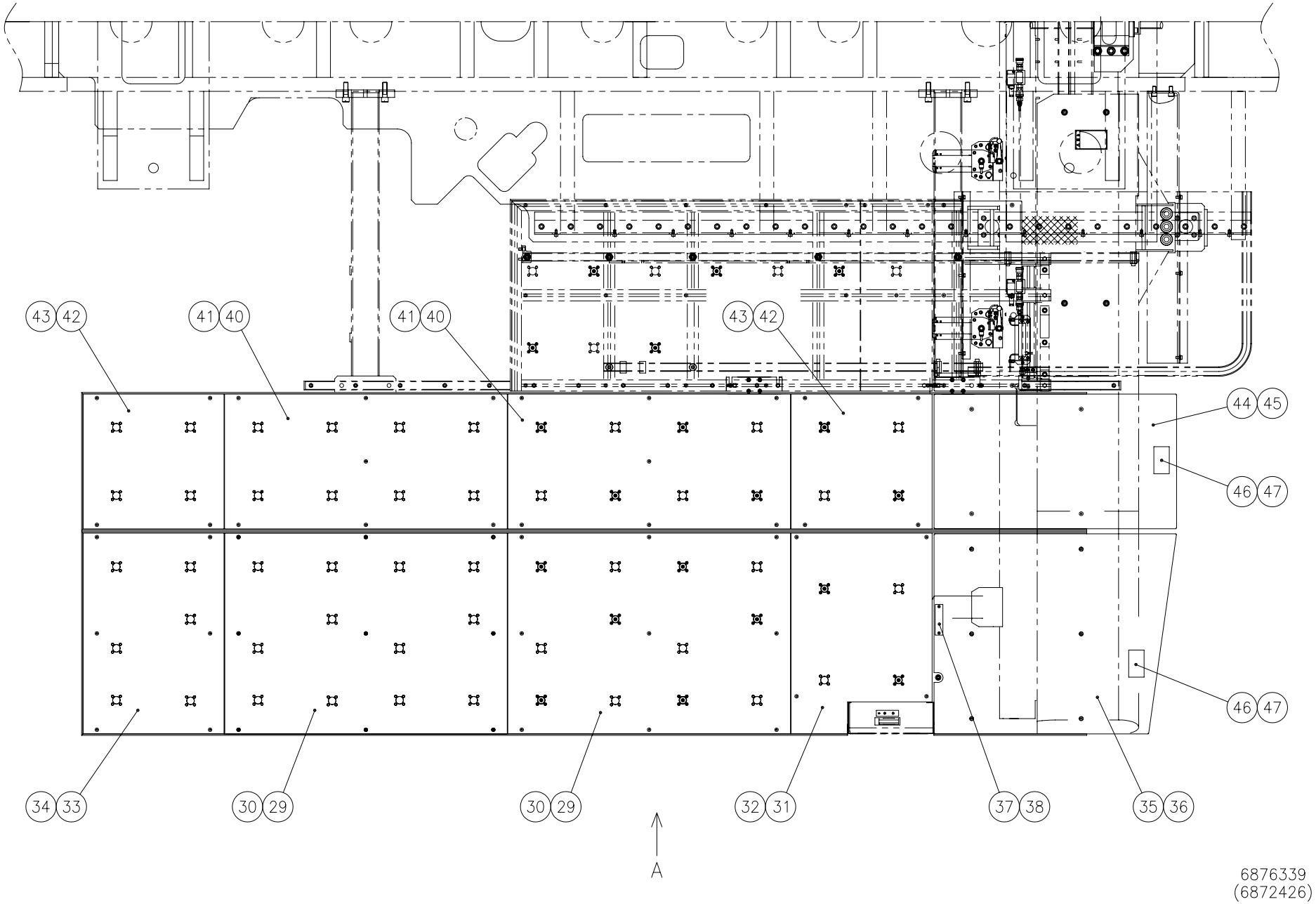
43 42
41 40
41 40
43 42
44 45
46 47
46 47
34 33
30 29
30 29
32 31
37 38
35 36
A
6876339
(6872426)

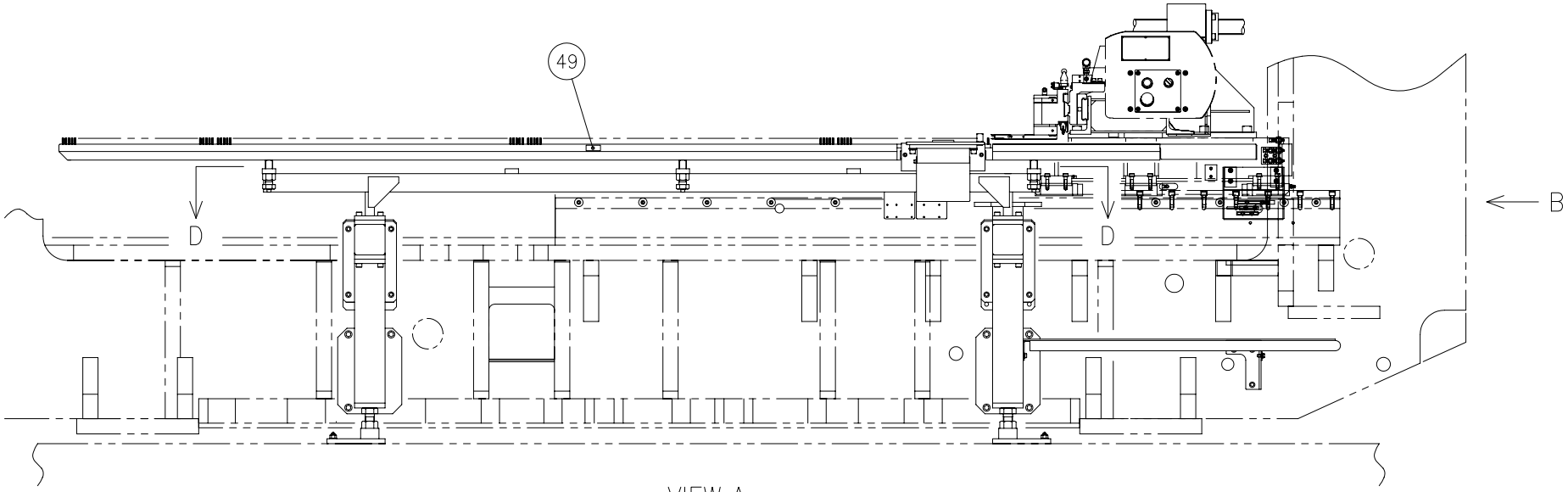

VIEW A

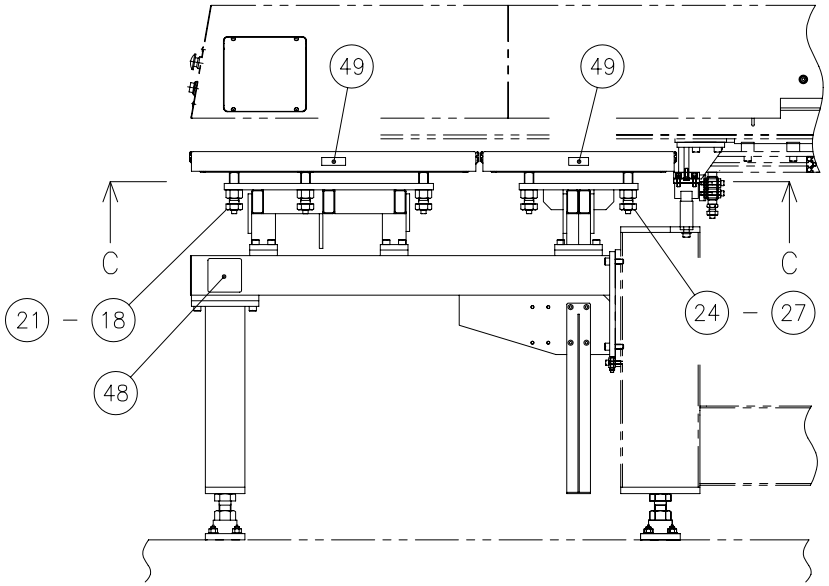

VIEW B

6876339
(6872426)

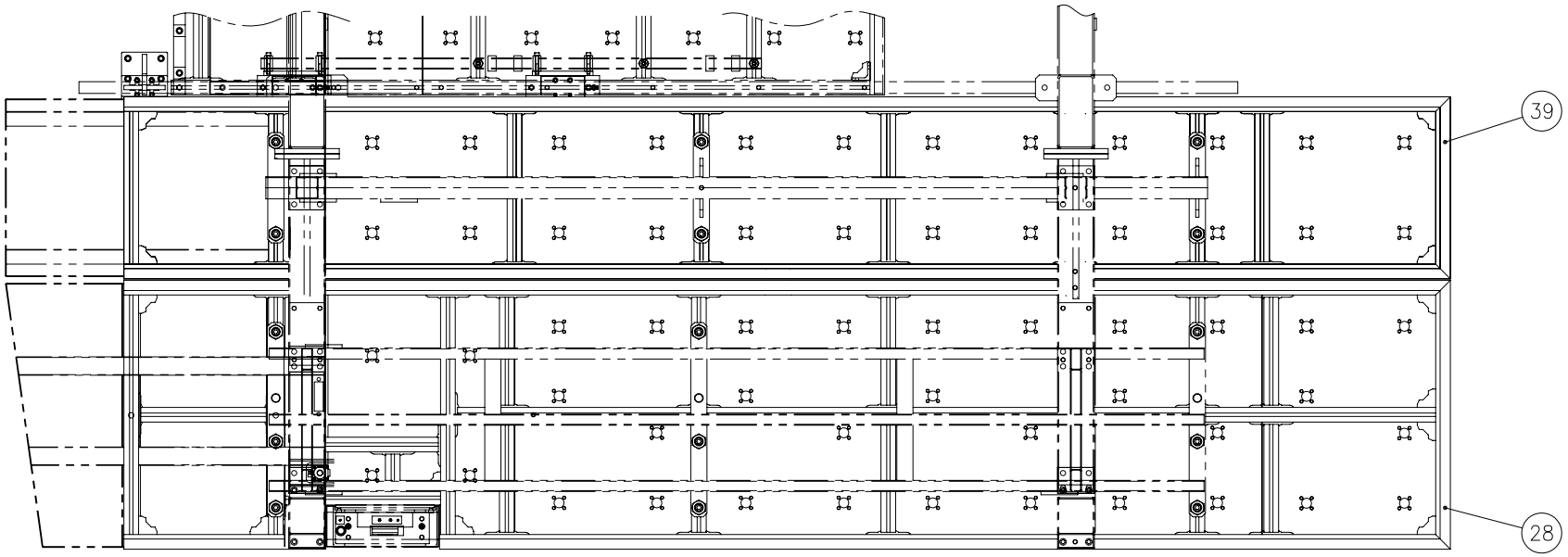

SECTION C–C

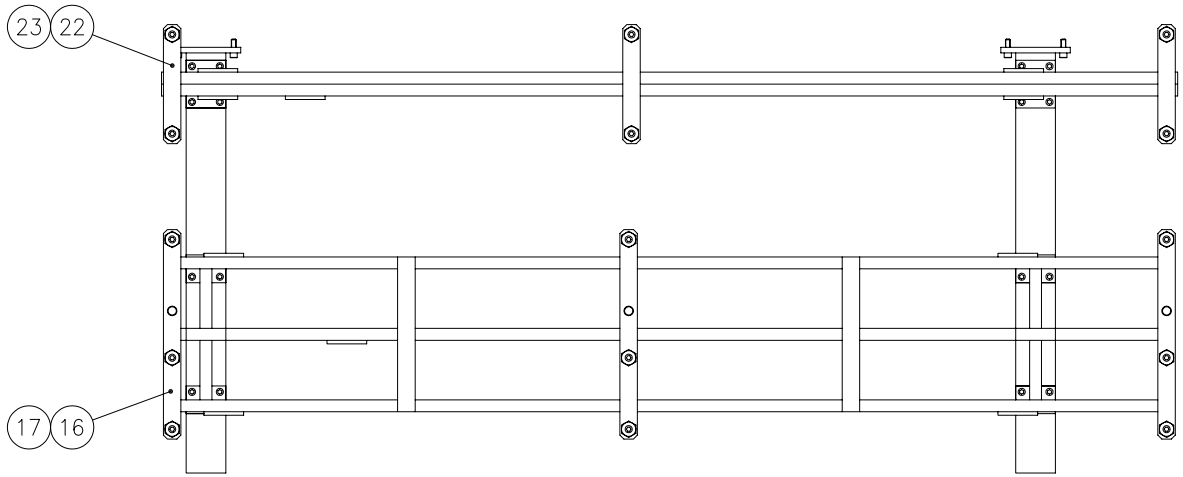

SECTION D–D

6876339
(6872426)

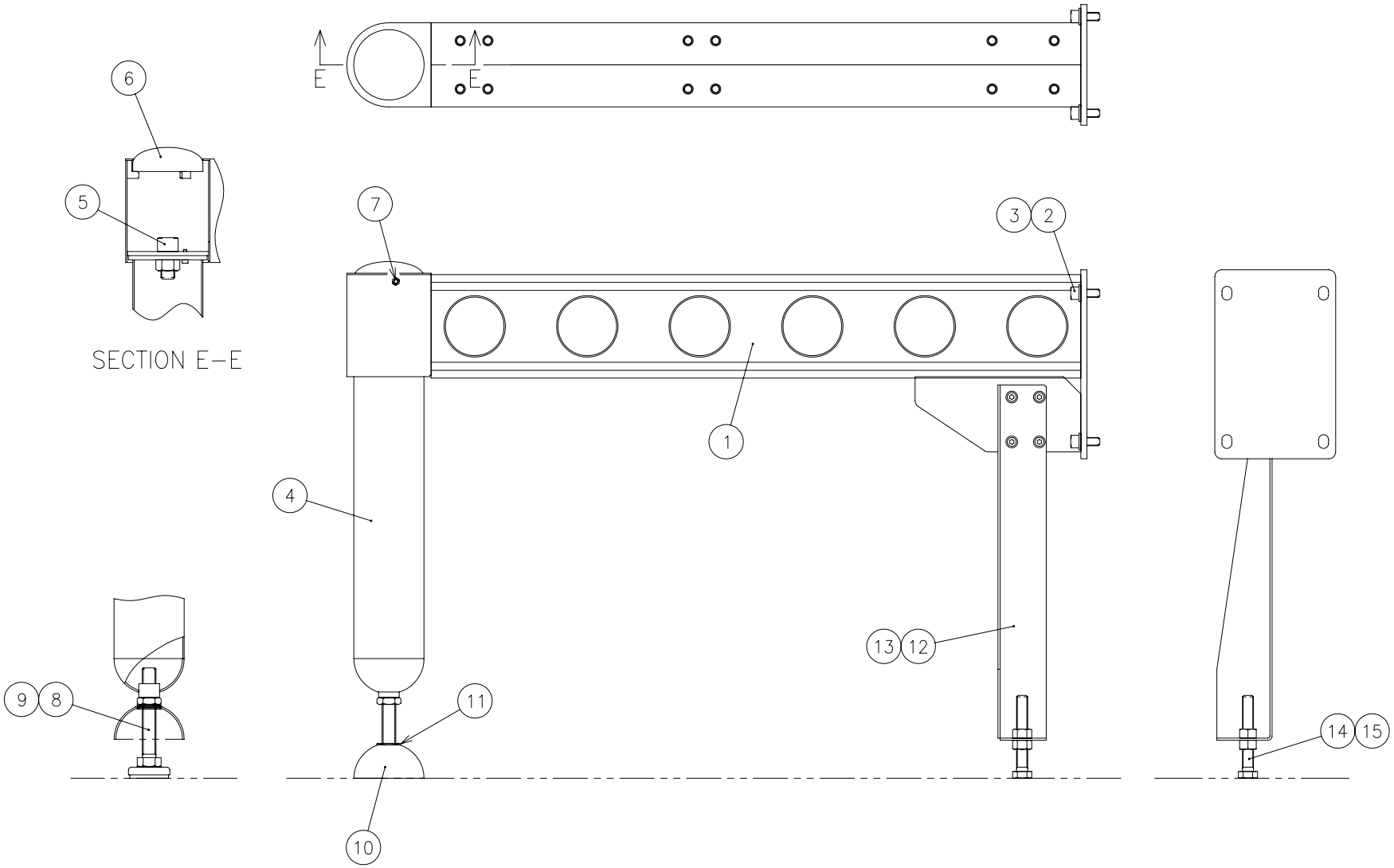

6879685

From Serial No.36102001 and after

Index	Code	Parts Name	Drawing No.	Type	Maker	Q'ty	Note
1	74419472	Side Table Base (R)	380787100A			1	
2	36367655	Hex Soc Cap Screw	P330250005	M12X30		4	
3	86613931	Washer	P336000008	12(Regular Round)		4	
4	74419473	Stand	6879686			1	
5	36320521	Hex Soc Cap Screw	P330270003	M20X40		1	
6	74419474	Cap	6879678			1	
7	86620204	Socket Set Screw	P330590019	M6X10(Cup-end)		1	
8	74570064	Level Adjuster	P384022021	KC-280-0	TAKIGEN	1	
9	10380040	Nut	P332000023	M20(Thin)		1	
10	74419475	Level Adjuster Cover	3807879			1	
11	31100028	Bush For Cable	P229112053	C-30-NG-79-Q	TAKIGEN	1	
12	74419476	Shipping Bracket	3807874 A			1	
13	75420815	Flange Socket Bolt	P330468001	M8X20	NISSAN NEJI	4	
14	36163072	Bolt	P330060076	M16X120(All-thread)		1	
15	86611630	Nut	P332000066	M16(Type-1)		1	
16	74578812	Side Table Frame (1)	6823892 A			1	
17	36110743	Hex Soc Cap Screw	P330250006	M12X35		16	
18	74569742	Jack Screw	6821834			9	
19	71371592	Nut	P332000011	M24		9	

Index	Code	Parts Name	Drawing No.	Type	Maker	Q'ty	Note
20	79316161	Hex Soc Cap Screw	P330230024	M8X110		9	
21	79567109	Washer	P336000006	8(Regular Round)		9	
22	74578813	Side Table Frame (2)	6823893 A			1	
23	36110743	Hex Soc Cap Screw	P330250006	M12X35		8	
24	74569742	Jack Screw	6821834			6	
25	71371592	Nut	P332000011	M24		6	
26	79316161	Hex Soc Cap Screw	P330230024	M8X110		6	
27	79567109	Washer	P336000006	8(Regular Round)		6	
28	74419477	Fixed Table (F) A	7830940 A		NIC	1	
29	74571312	MDF Brush (K-4)	6823663 A			2	
30	74722756	Button Head Screw	P334500021	M8X25		18	
31	74571269	MDF Brush (K-5)	6821845 B			1	
32	74722756	Button Head Screw	P334500021	M8X25		4	
33	74571270	MDF Brush (K-8)	6823665 A			1	
34	74722756	Button Head Screw	P334500021	M8X25		6	
35	74418378	Cover Table (F-1)	6823013 B			1	
36	79565423	Hex Soc Cap Screw	P330230004	M8X15		6	
37	74569764	Maintenance Cover	6812712			1	
38	31179660	Button Head Screw	P334500009	M5X10		2	

Index	Code	Parts Name	Drawing No.	Type	Maker	Q'ty	Note
39	74578815	Fixed Table (F) B	7830865		NIC	1	
40	74415176	MDF Brush (K-1)	6823635			2	3.2mm
40	74575212	MDF Brush (K-1)	6823846			2	4.5mm
41	74722756	Button Head Screw	P334500021	M8X25		14	
42	74415177	MDF Brush (K-3)	6823636			2	3.2mm
42	74575185	MDF Brush (K-3)	6823847			2	4.5mm
43	74722756	Button Head Screw	P334500021	M8X25		8	
44	74415449	Cover Table (F-2)	6823844 A			1	
45	79565423	Hex Soc Cap Screw	P330230004	M8X15		4	
46	71362136	Legend Plate (Warning)(3)	6045924			2	English
46	71362135	Legend Plate (Warning)(3) FRA	6045078			2	French
46	71362137	Legend Plate (Warning)(3) GER	6046718			2	German
46	71362138	Legend Plate (Warning)(3) ITA	6046728			2	Italian
46	74415924	Legend Plate (Warning)(3)	6816795			2	Chinese
47	74326603	Blind Rivet	P339208001	NTA3-2	LOBTEX	8	
48	74419480	Legend Plate (Caution) E	3809322	(DO NOT LIFT HERE)		2	English
48	74419481	Legend Plate (Caution) F	3809323			2	French
48	74419479	Legend Plate (Caution) G	3809321			2	German
48	74419482	Legend Plate (Caution) I	3809324			2	Italian

From Serial No.36102001 and after

Index	Code	Parts Name	Drawing No.	Type	Maker	Q'ty	Note
48	74419478	Legend Plate (Caution) C	3809319			2	Chinese
49	71130447	Legend Plate (Do Not Get On)	0840546			5	
50	74417405	Sticker (Fixed Table)(Export)	6871975			1	List Only
51	74419483	Adhesive Tape	P379108025	FE-6061 (20mm)	FANTAC	5	1M (List Only)

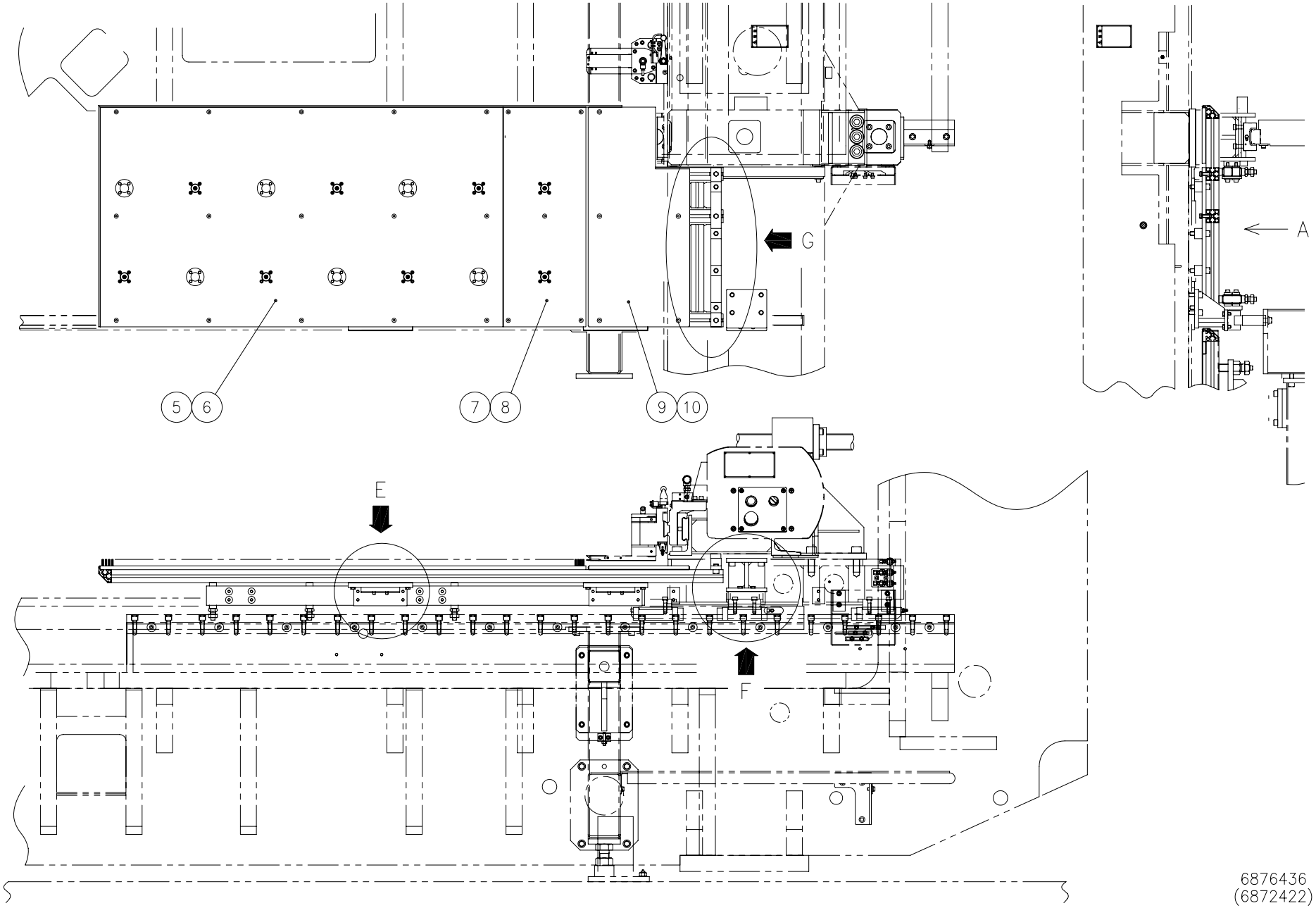
G
A
5
6
7
8
9
10
E
F
6876436
(6872422)

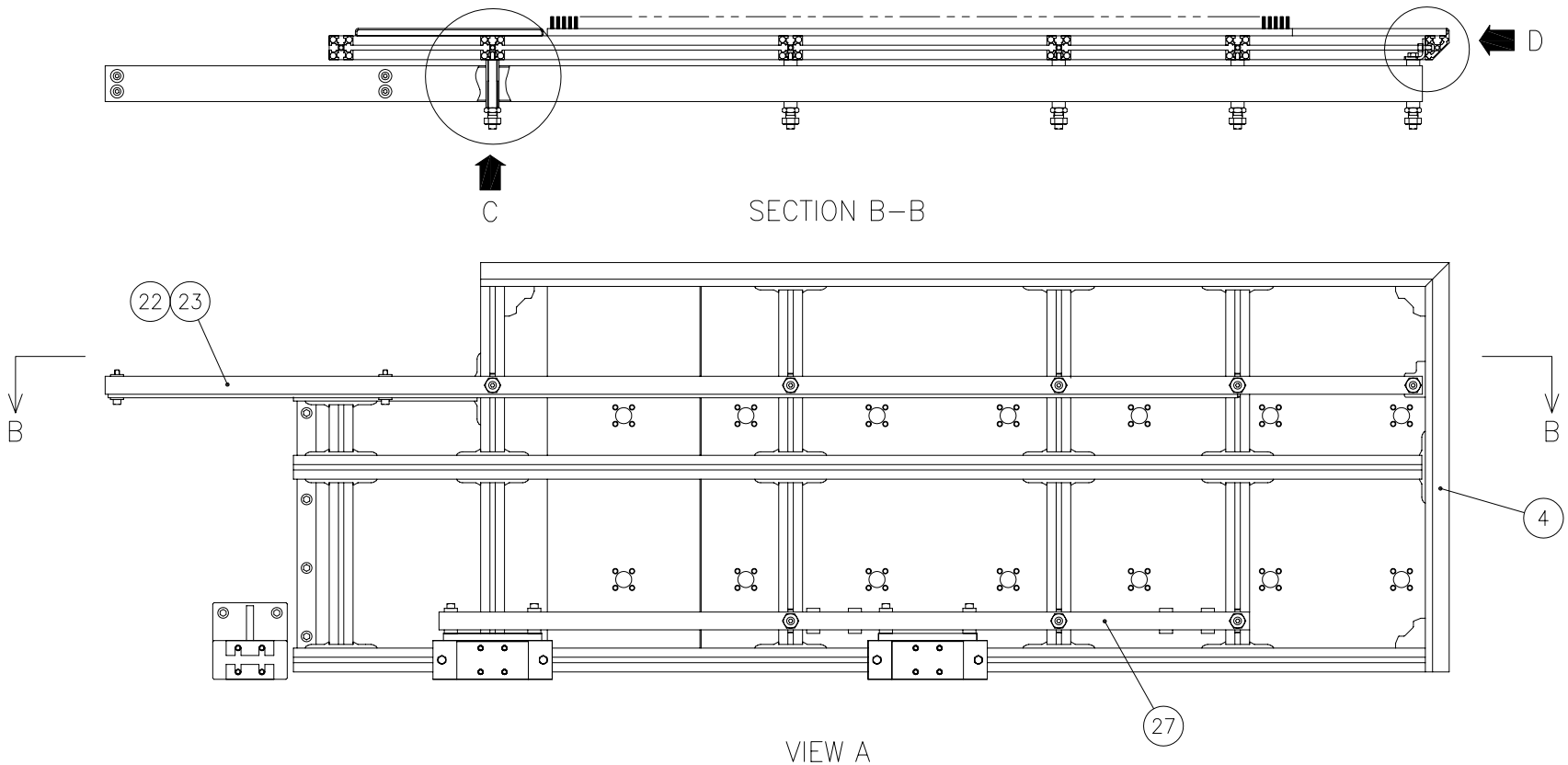

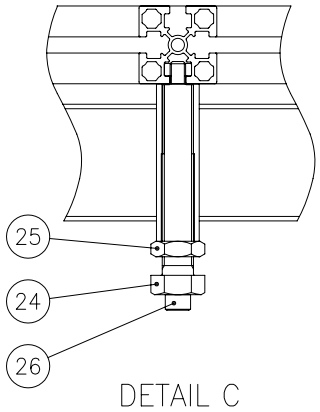

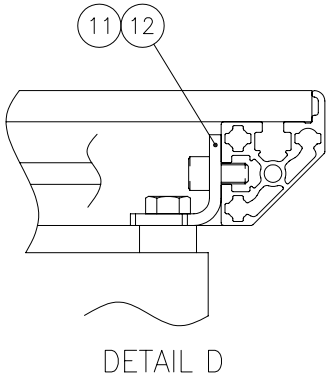

6876436
(6872422)

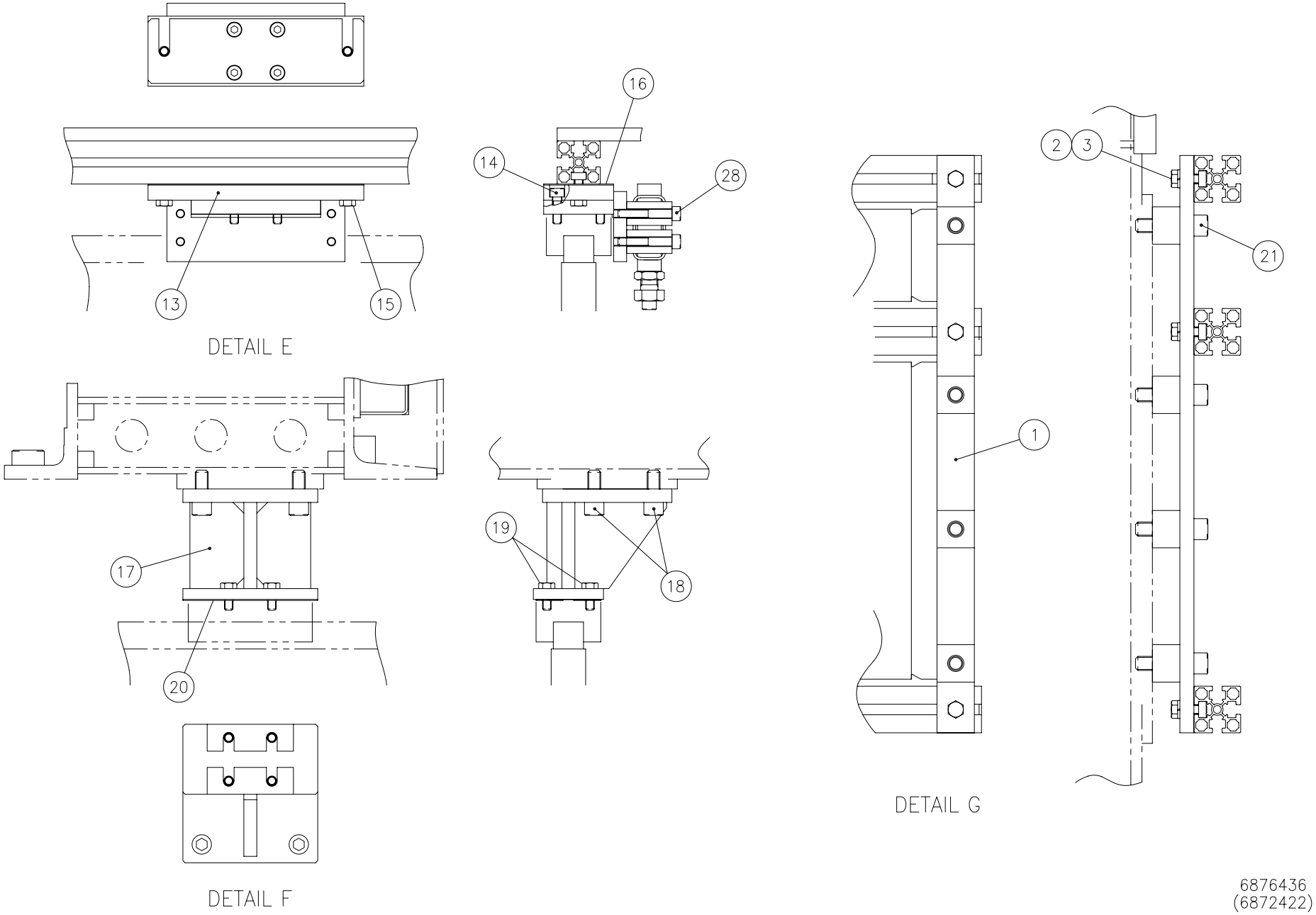
16
14
28
13
15
DETAIL E
2
3
21
1
17
20
19
18
DETAIL G
DETAIL F
6876436
(6872422)

From Serial No.36102001 and after

Index	Code	Parts Name	Drawing No.	Type	Maker	Q'ty	Note
1	74415465	Table Spacer	6828647			1	
2	74183005	Bolt	P330030007	M8X25		3	
3	86610326	Spring Washer	P336050006	8		3	
4	74418375	Moving Table (F)	7830942		NIC	1	
5	74415175	MDF Brush (I-1)	6823682			1	3.2mm
5	74571284	MDF Brush (I-1)	6823627 A			1	4.5mm
6	74722756	Button Head Screw	P334500021	M8X25		15	
7	74578826	MDF Brush (I-2)	6823683			1	3.2mm
7	74571327	MDF Brush (I-2)	6823628 A			1	4.5mm
8	74722756	Button Head Screw	P334500021	M8X25		5	
9	74415444	Cover Table (S-F)	6828649			1	
10	79565423	Hex Soc Cap Screw	P330230004	M8X15		5	
11	74415467	Angle	6828651 A			1	
12	79565423	Hex Soc Cap Screw	P330230004	M8X15		2	
13	74418396	LM Support	6872480			2	
14	79566121	Hex Soc Cap Screw	P330230007	M8X25		8	
15	74183005	Bolt	P330030007	M8X25		4	
16	74571308	Shim	6823604			2	
17	74415468	Moving Table Bracket	6828648			1	

Index	Code	Parts Name	Drawing No.	Type	Maker	Q'ty	Note
18	36367655	Hex Soc Cap Screw	P330250005	M12X30		4	
19	36176605	Bolt	P330030006	M8X20		4	
20	74571309	Shim	6826306			2	
21	79316507	Hex Soc Cap Screw	P330250009	M12X50		4	
22	74418397	Table Guide	6872436	R60X30X2.3		1	
23	10443146	Hex Soc Cap Screw	P330230012	M8X50		4	
24	74415446	Adjustable Bolt	6822812 A			8	
25	78180815	Nut	P332000022	M16(Thin)		8	
26	74707962	Hex Soc Cap Screw	P330230026	M8X120		8	
27	74418398	Auxiliary Arm (1)	6872481	R60X30X2.3		1	
28	10443146	Hex Soc Cap Screw	P330230012	M8X50		8	

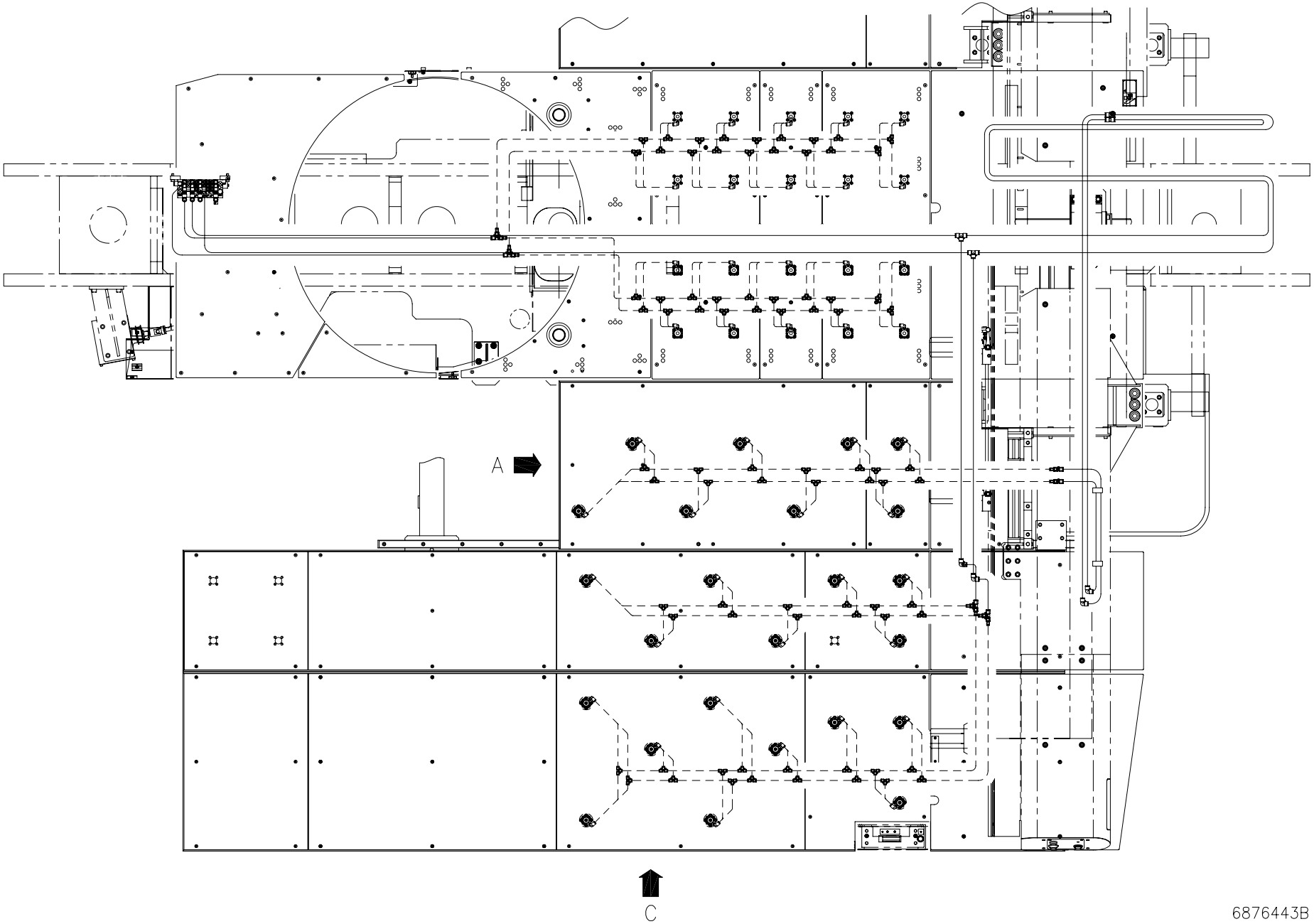
A
C
6876443B

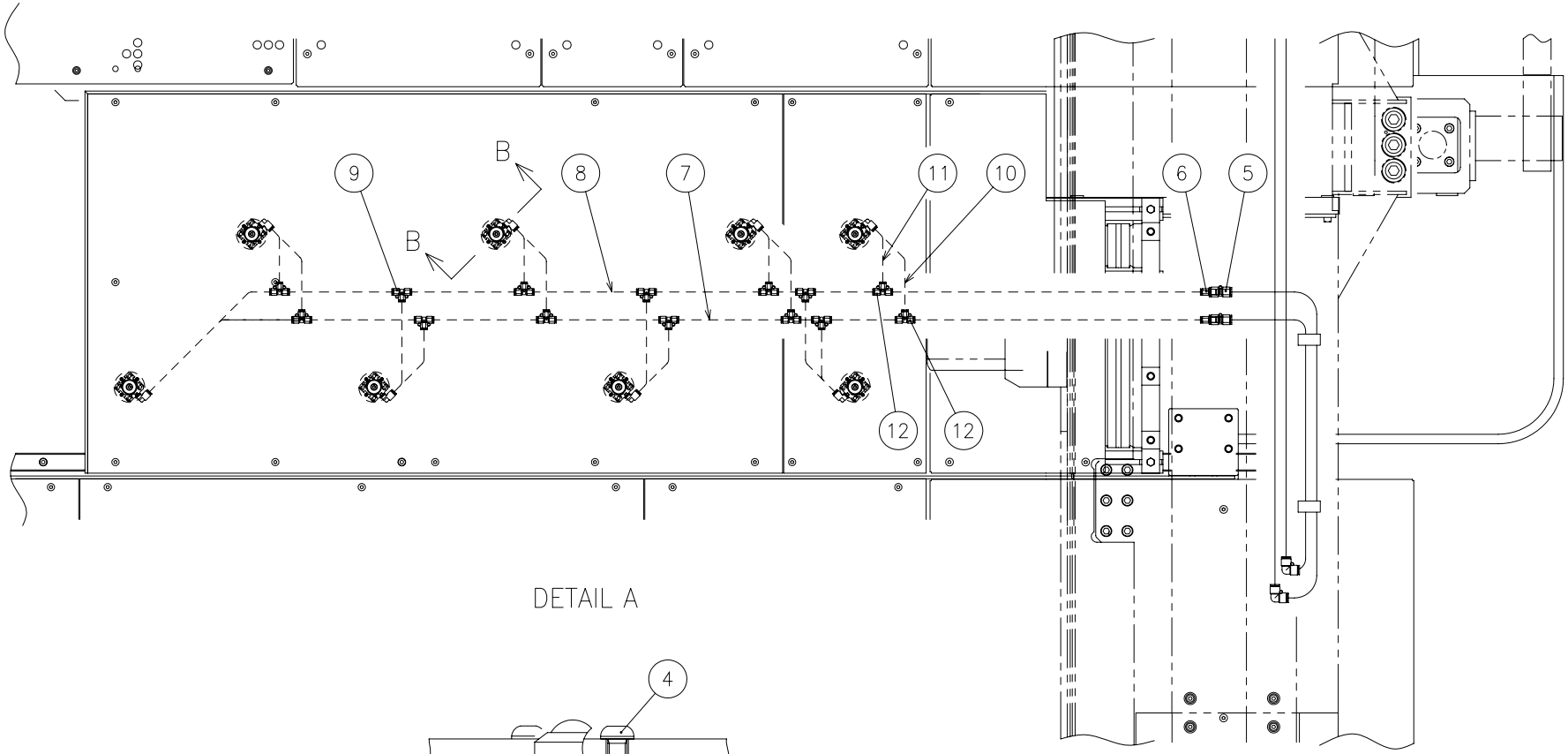

DETAIL A

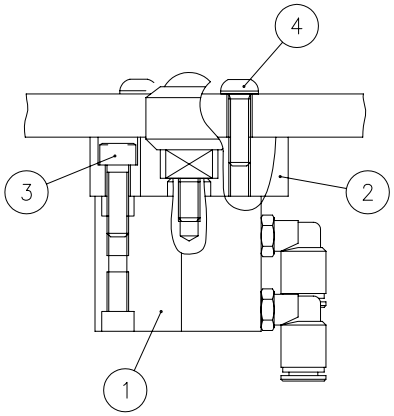

SECTION B–B (8 Sets)

6876443B

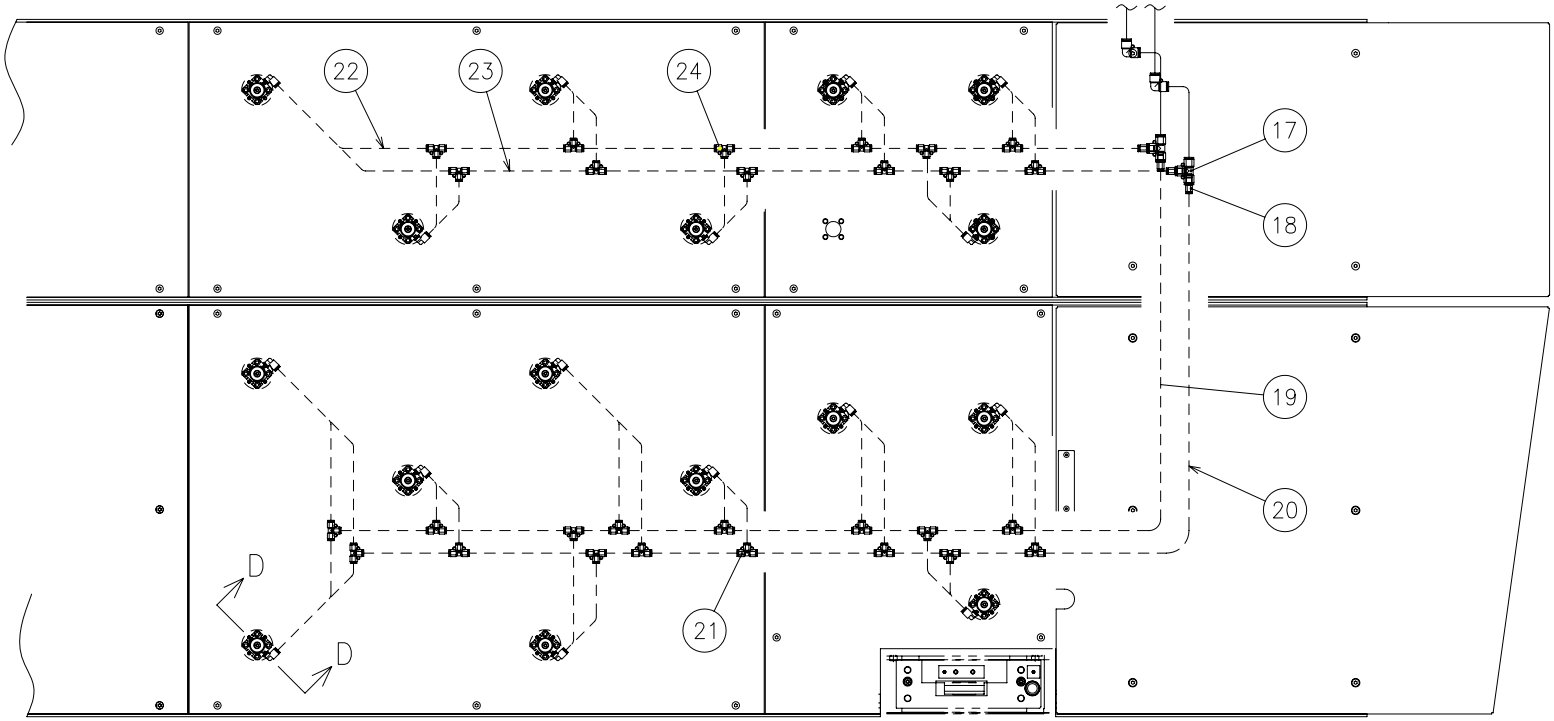

DETAIL C

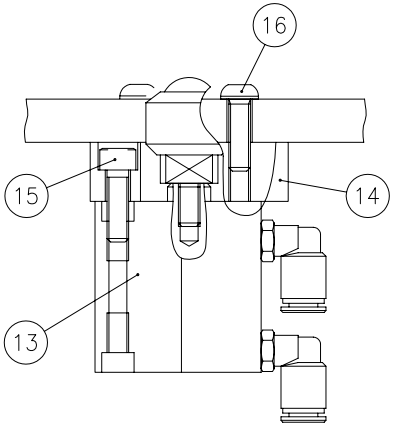

SECTION D–D (16 Sets)

6876443B

Index	Code	Parts Name	Drawing No.	Type	Maker	Q'ty	Note
1	74568593	Cylinder	7832806 A	SSD-25-15	CKD	1	
2	74569774	Cylinder Collar	6821848			1	
3	79567722	Hex Soc Cap Screw	P330220009	M6X20		4	
4	74314603	Button Head Screw	P334500016	M6X20		4	
5	74565147	Instant Fitting	P586604021	EUC10	NITTA MOORE	2	
6	74562784	Instant Fitting	P586654002	ER6-10	NITTA MOORE	2	
7	74415492	Plastic Hose	P230222148	N2-4-6X4(Blue)-10M	NITTA MOORE	1	
8	74415488	Plastic Hose	P230222149	N2-4-6X4(Red)-10M	NITTA MOORE	1	
9	74338327	Instant Fitting	P586604012	EUT6	NITTA MOORE	12	
10	74415492	Plastic Hose	P230222157	N2-4-6X4(Blue)-1M	NITTA MOORE	1	
11	74415488	Plastic Hose	P230222158	N2-4-6X4(Red)-1M	NITTA MOORE	1	
12	74338327	Instant Fitting	P586604012	EUT6	NITTA MOORE	2	
13	74568610	Cylinder	7832804 A	SSD-L-25-15-T5V5-H	CKD	1	
14	74569774	Cylinder Collar	6821848			1	
15	79567722	Hex Soc Cap Screw	P330220009	M6X20		4	
16	74314603	Button Head Screw	P334500016	M6X20		4	
17	74379378	Instant Fitting	P586604013	EUT10	NITTA MOORE	2	
18	74562784	Instant Fitting	P586654002	ER6-10	NITTA MOORE	4	
19	74415492	Plastic Hose	P230222148	N2-4-6X4(Blue)-10M	NITTA MOORE	1	

Index	Code	Parts Name	Drawing No.	Type	Maker	Q'ty	Note
20	74415488	Plastic Hose	P230222149	N2-4-6X4(Red)-10M	NITTA MOORE	1	
21	74338327	Instant Fitting	P586604012	EUT6	NITTA MOORE	16	
22	74415492	Plastic Hose	P230222148	N2-4-6X4(Blue)-10M	NITTA MOORE	1	
23	74415488	Plastic Hose	P230222149	N2-4-6X4(Red)-10M	NITTA MOORE	1	
24	74338327	Instant Fitting	P586604012	EUT6	NITTA MOORE	12	

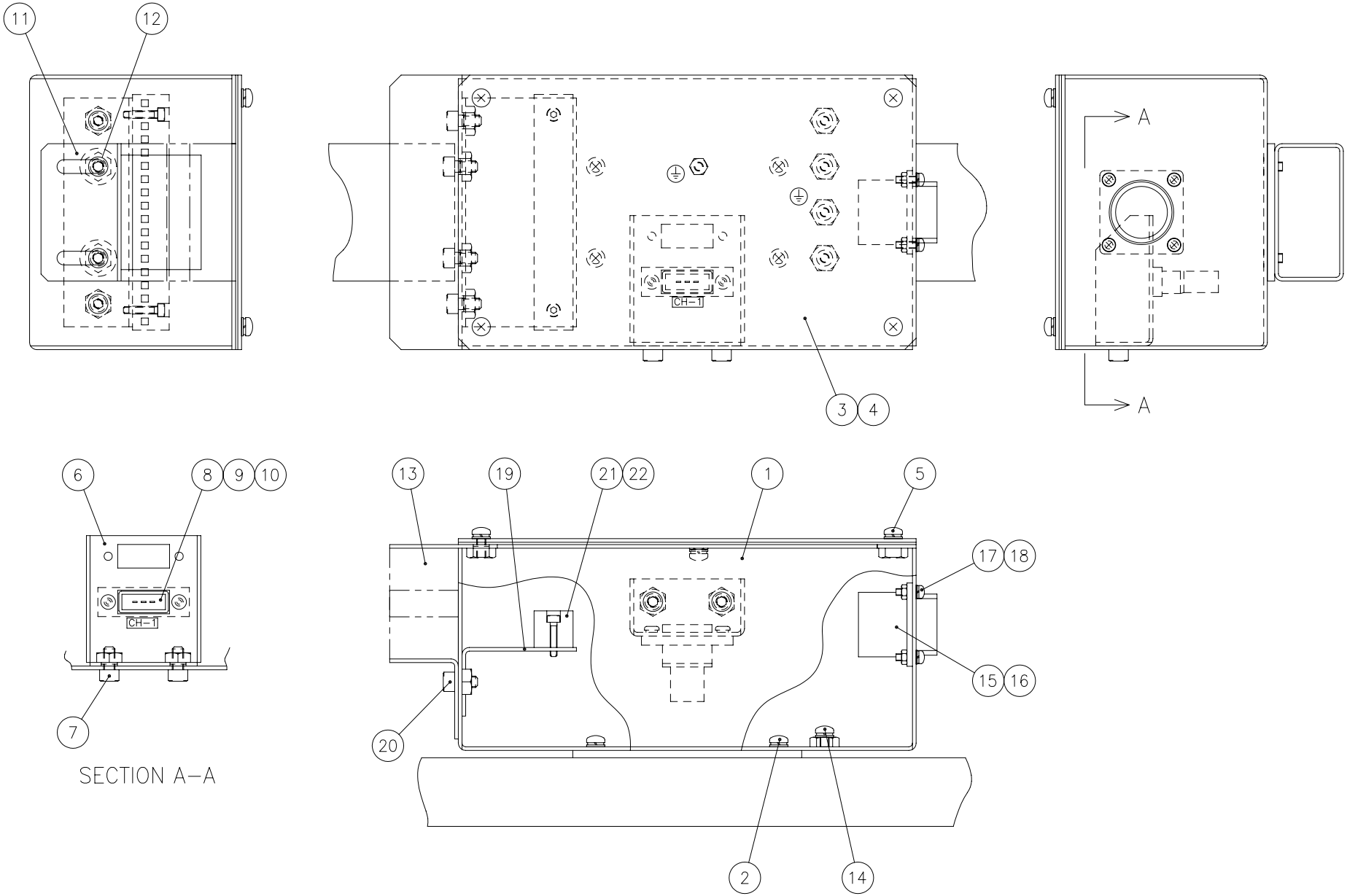
11
12
3
4
A
A
6
8
9
10
CH-1
7
SECTION A-A
13
19
21
22
1
5
17
18
15
16
20
2
14
6824760A

Index	Code	Parts Name	Drawing No.	Type	Maker	Q'ty	Note
1	74415498	Relay Box (F)	6824761 A			1	
2	74570030	Pan Head Screw with Washer	P334200115	M4X10(Chromate P-4)		4	
3	74575225	Relay Box (F) Cover	6824762			1	
4	74575227	Packing (F)	6824763			1	
5	74570033	Pan Head Screw with Washer	P334200134	M5X10(Chromate P-4)		4	
6	74575149	Housing Plate (FC)	6826465			1	
7	79573416	Hex Soc Cap Screw	P330210003	M5X10		2	
8	74386502	Rectangle Connector	P862042073	1-178802-3	AMP	1	
9	74386503	Plug Type Terminal	P862142036	175289-5	AMP	3	
10	74386505	Accessory For Connector	P862182002	900128-2	AMP	2	
11	74387019	Cable Clamp (FC)	6596069			1	
12	79573416	Hex Soc Cap Screw	P330210003	M5X10		2	
13	74387020	Sponge Rubber	P230580063	CR-T20X20X60		2	
14	74569811	Pan Head Screw with Washer	P334200113	M4X6(Chromate P-4)		5	(Ground)
15	74521705	Plastic R Connector	P862032003	206036-1	AMP	1	
16	74384510	Plug Type Terminal	P862142020	66400-1	AMP	11	
17	74570051	Pan Head Screw with Washer	P334200109	M3X10(Chromate P-4)		4	
18	74307616	Nut	P332000001	M3		4	
19	74575145	Bracket (F)	6824764			1	

Index	Code	Parts Name	Drawing No.	Type	Maker	Q'ty	Note
20	79573416	Hex Soc Cap Screw	P330210003	M5X10		2	
21	74569809	Block Terminal	P864008047	MK4/16KRG	WEIDMULLER	1	
22	79316101	Hex Soc Cap Screw	P330200006	M3X15		2	

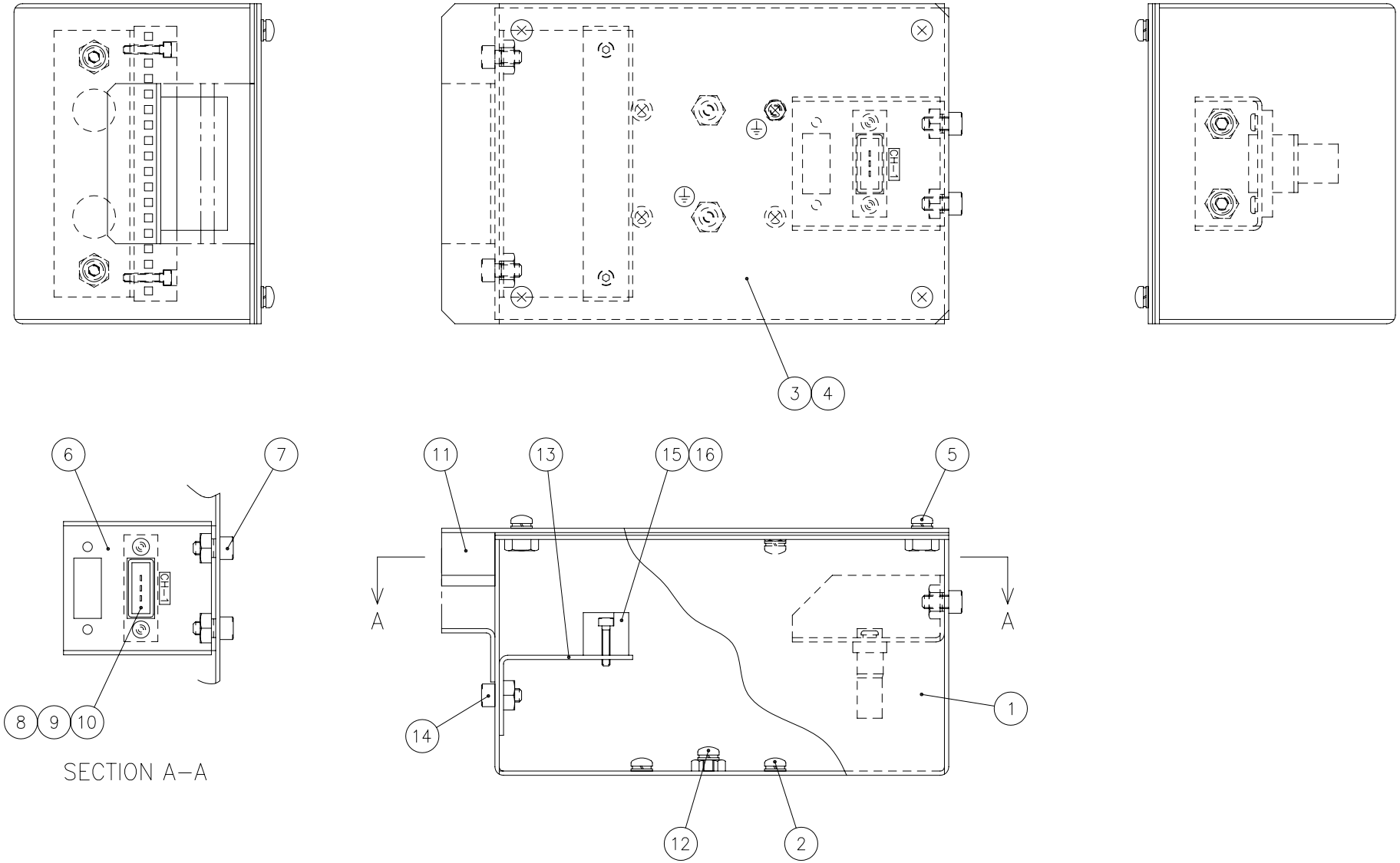

6824766

Index	Code	Parts Name	Drawing No.	Type	Maker	Q'ty	Note
1	74575144	Relay Box (FC)	6824767			1	
2	74570030	Pan Head Screw with Washer	P334200115	M4X10(Chromate P-4)		4	
3	74575147	Relay Box (FC) Cover	6824768			1	
4	74575224	Packing (FC)	6824769			1	
5	74570033	Pan Head Screw with Washer	P334200134	M5X10(Chromate P-4)		4	
6	74575149	Housing Plate (FC)	6826465			1	
7	79573416	Hex Soc Cap Screw	P330210003	M5X10		2	
8	74386502	Rectangle Connector	P862042073	1-178802-3	AMP	1	
9	74386503	Plug Type Terminal	P862142036	175289-5	AMP	3	
10	74386505	Accessory For Connector	P862182002	900128-2	AMP	2	
11	74387020	Sponge Rubber	P230580063	CR-T20X20X60		2	
12	74569811	Pan Head Screw with Washer	P334200113	M4X6(Chromate P-4)		3	(Ground)
13	74575145	Bracket (F)	6824764			1	
14	79573416	Hex Soc Cap Screw	P330210003	M5X10		2	
15	74569809	Block Terminal	P864008047	MK4/16KRG	WEIDMULLER	1	
16	79316101	Hex Soc Cap Screw	P330200006	M3X15		2	

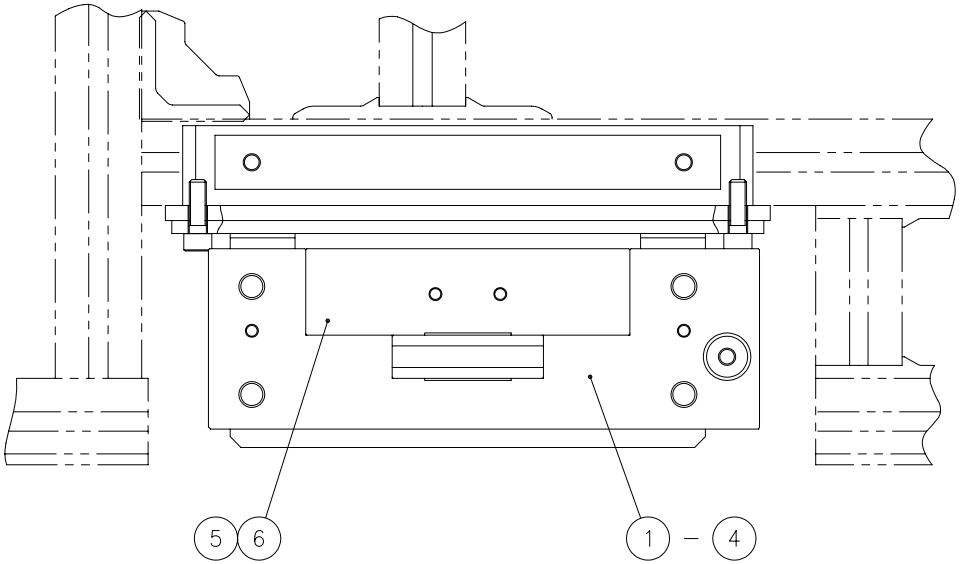

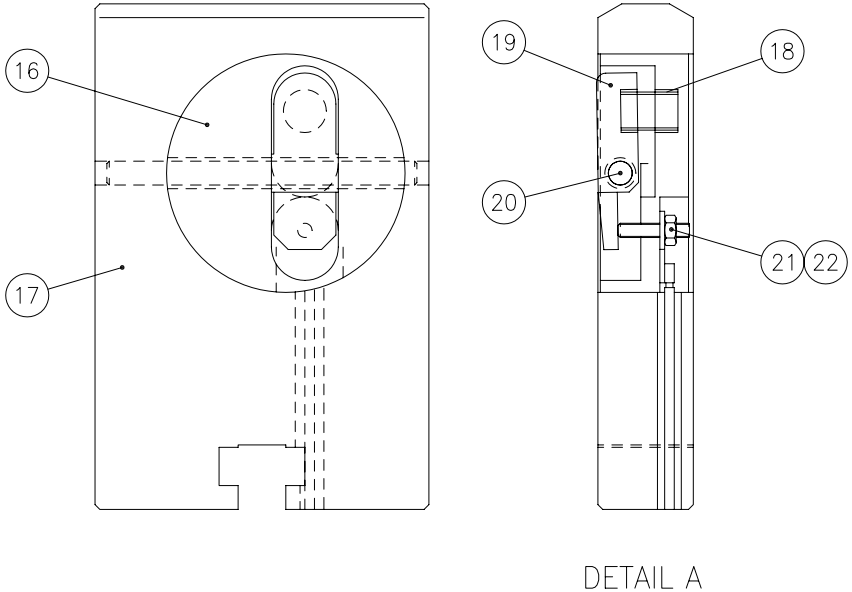

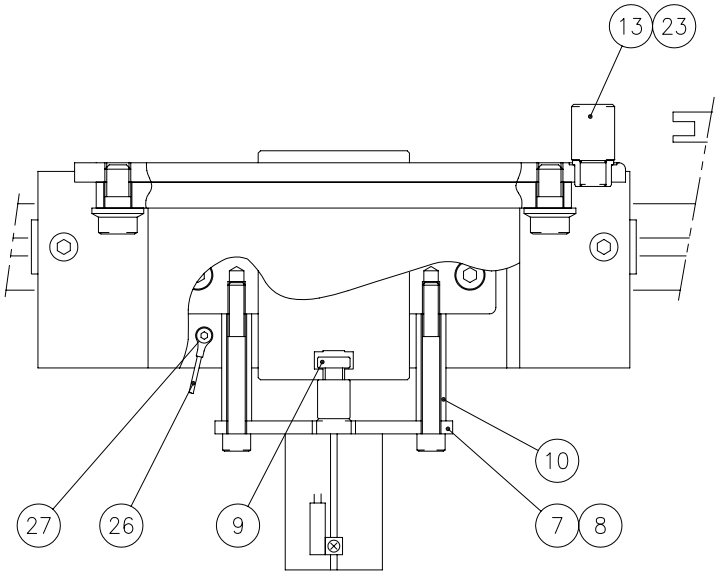

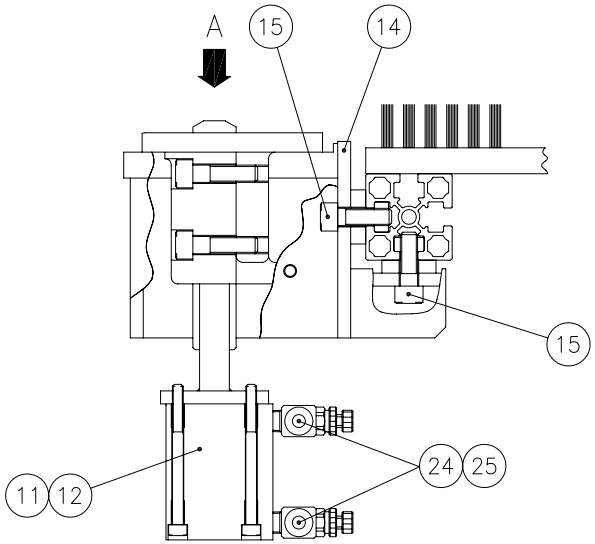

6870993
(6824364A)

Index	Code	Parts Name	Drawing No.	Type	Maker	Q'ty	Note
1	74563933	Locating Pin Guide A	6572986 E			1	
2	79568704	Hex Soc Cap Screw	P330250004	M12X25		4	
3	86610819	Spring Washer	P336050008	12		4	
4	86613931	Washer	P336000008	12(Regular Round)		4	
5	74382816	Locating Pin Guide	6572978 B			1	
6	79568702	Hex Soc Cap Screw	P330230008	M8X30		4	
7	74722137	Cylinder Guide B	6533802			1	
8	36326825	Hex Soc Cap Screw	P330230016	M8X70		2	
9	74382977	Locating Pin Collar	6533803 A			1	
10	74382979	Cylinder Guide A	6533807			2	
11	74415497	Cylinder	7832807 A	CDQ2B32D-W0501-30	SMC	1	
12	79316159	Hex Soc Cap Screw	P330210018	M5X65		4	
13	74389511	Stopper Pin Bushing	6578599 B			1	
14	74578845	Locating Pin Bracket	6597285 B			1	
15	79566121	Hex Soc Cap Screw	P330230007	M8X25		4	
16	74382996	Stopper With Sensor	6533862 B			1	
17	74387231	Insulator	0829976 C	MC801		1	
18	71361522	Spring	0829622 A			1	
19	74573709	X-axis Touch Sensor Assy	0829974 C			1	

Index	Code	Parts Name	Drawing No.	Type	Maker	Q'ty	Note
20	74561072	Straight Pin	0829975 A			1	
21	74571503	Socket Set Screw	P330550179	M3X15(Flat-end)-A2-70		1	
22	74716014	Nut	P332000014	M3(Thin)		1	
23	74389510	Stopper Pin	6572979 B			1	
24	74569814	Plastic Hose	P230222101	U2-4-6X4(Red)-2M	NITTA MOORE	1	
25	71512277	Plastic Hose	P230222102	U2-4-6X4(Blue)-2M	NITTA MOORE	1	
26	74415496	Cable CR-6 (PE)	6827405			1	(Ground)
27	79574601	Hex Soc Cap Screw	P330200015	M4X10		1	(Ground)
28	74575274	Cable F-19	6824586			1	List Only

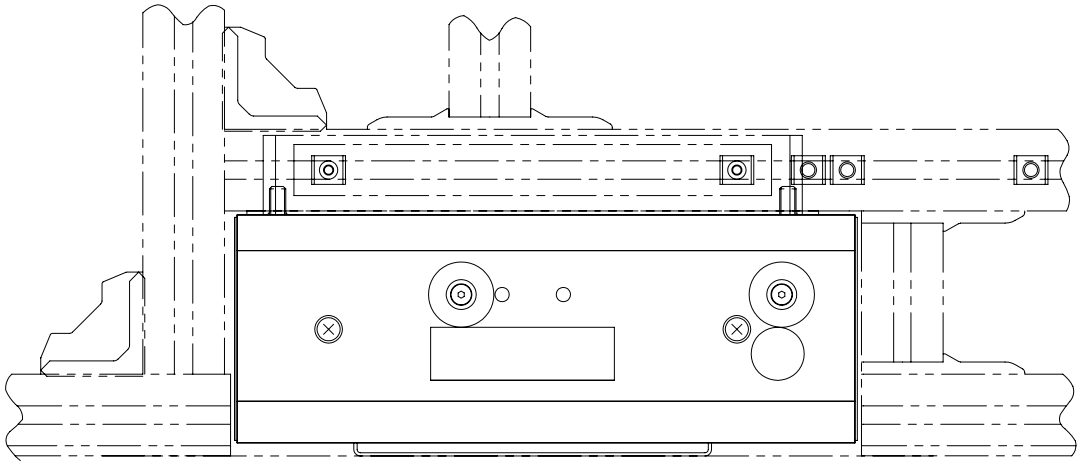

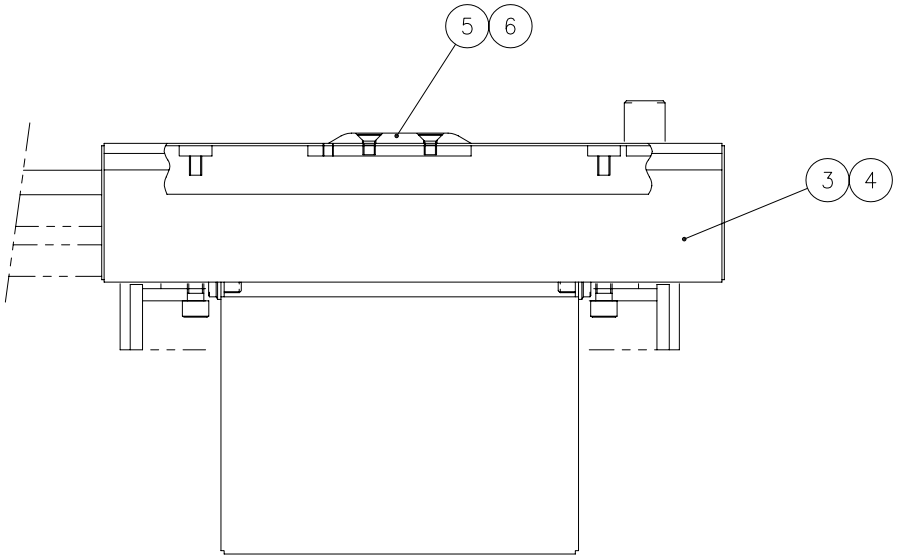

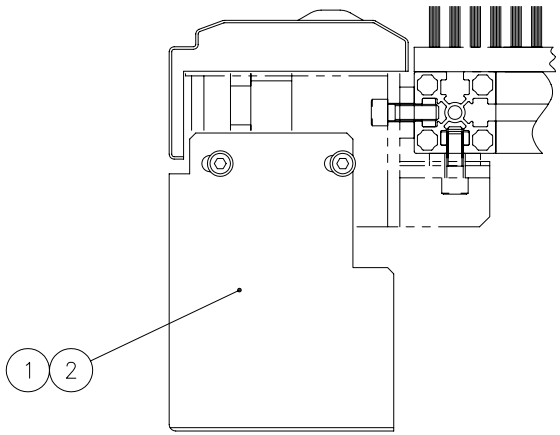

6827319
(6823658)

Unit No. 247

US Line (CR)-C(9) From Serial No.36102001 and after

Index	Code	Parts Name	Drawing No.	Type	Maker	Q'ty	Note
1	74575629	Side Cover	6813196 A			1	
2	75428708	Flange Socket Bolt	P330468015	M6X10	NISSAN NEJI	4	
3	74571329	Locating Pin Cover (A)	6823659			1	
4	31183551	Flat Head Bolt	P334520001	M6X15		2	
5	74562417	Support Plate (NJ)	6599304 A			2	
6	79321267	Flat Head Bolt	P334520006	M5X10		2	

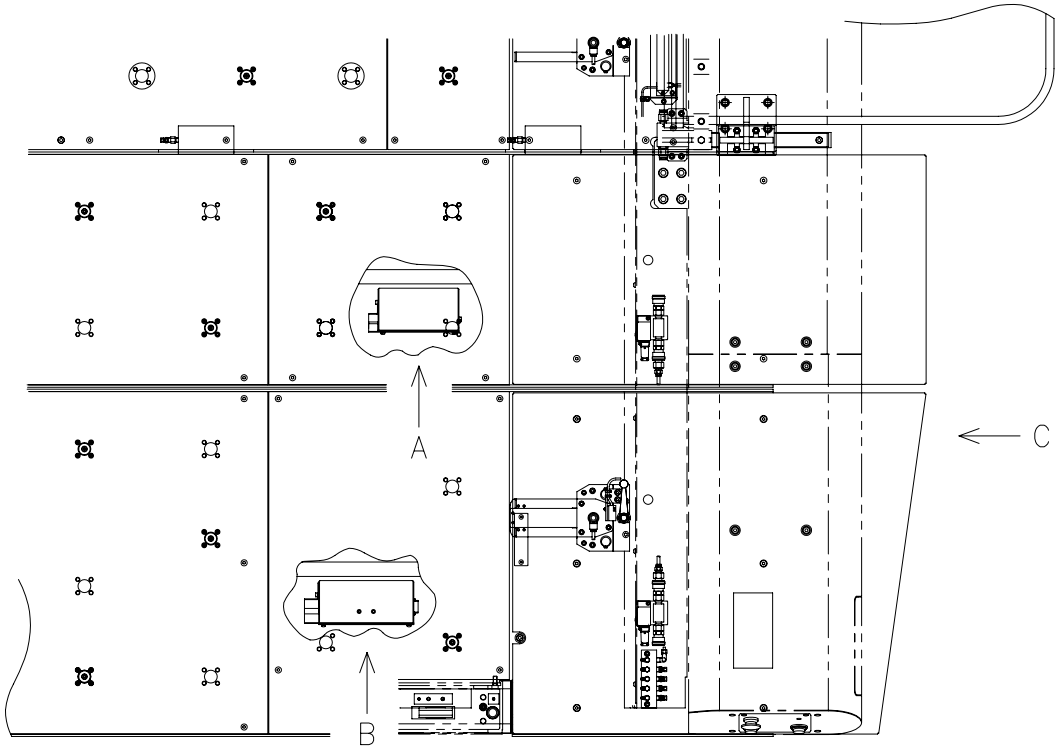

Front Side

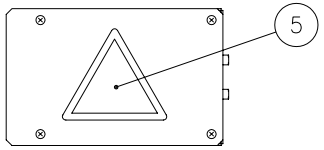

<FC Relay Box>
VIEW A

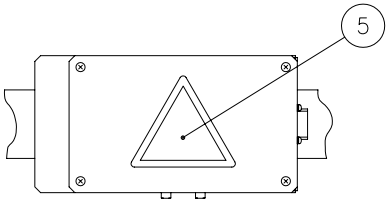

<F Relay Box>
VIEW B

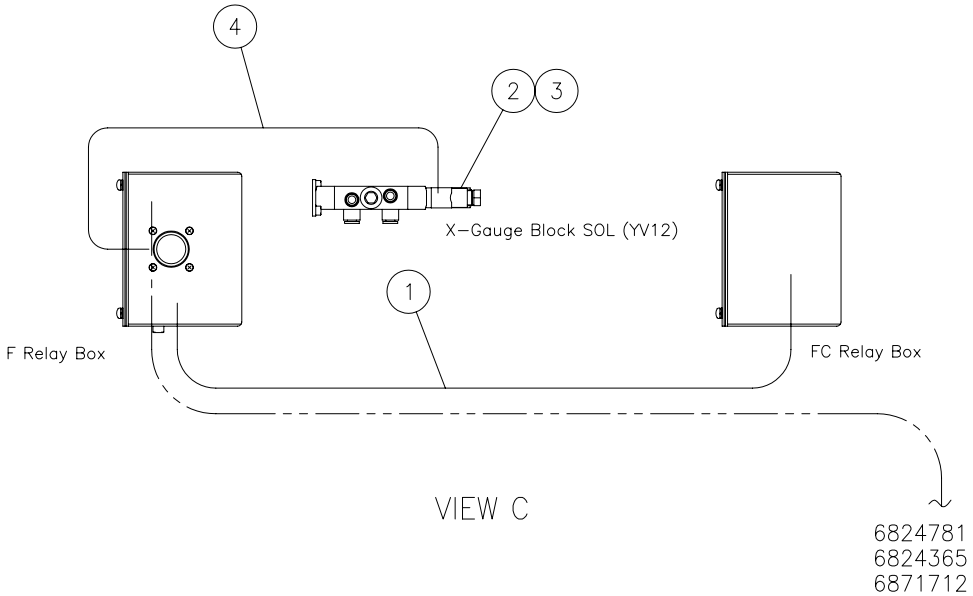

VIEW C

Unit No. 248

US Line (CR)-C(10) From Serial No.36102001 and after

Index	Code	Parts Name	Drawing No.	Type	Maker	Q'ty	Note
1	74415554	Cable CH-1	6828051 B			1	
2	74569880	Solenoid Valve	7832809		SMC	1	
3	79572401	Hex Soc Cap Screw	P330200014	M4X8		2	
4	74575280	Cable Y-12 (1)	6827575			1	
5	74379098	Charging Mark	P360200003	JISB6015-80H		2	

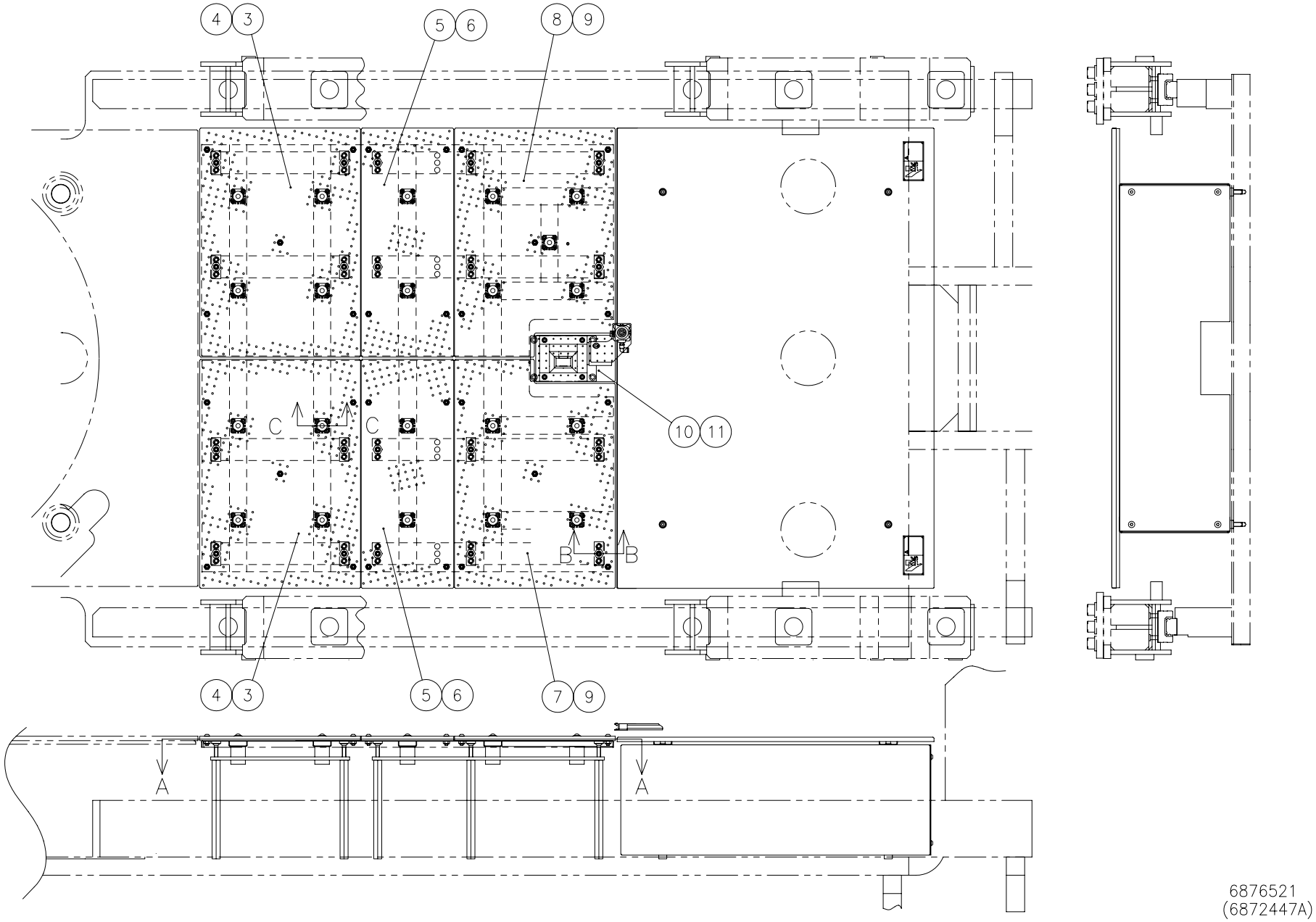
4
3
5
6
8
9
10
11
C
C
B
B
7
A
A
6876521
(6872447A)

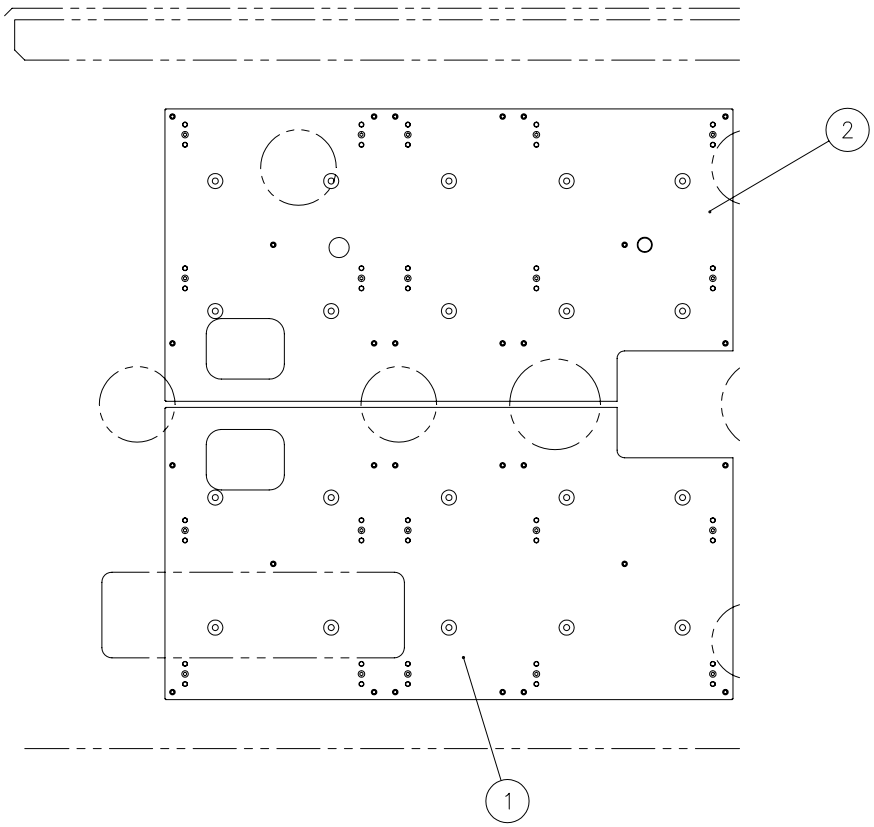

SECTION A–A

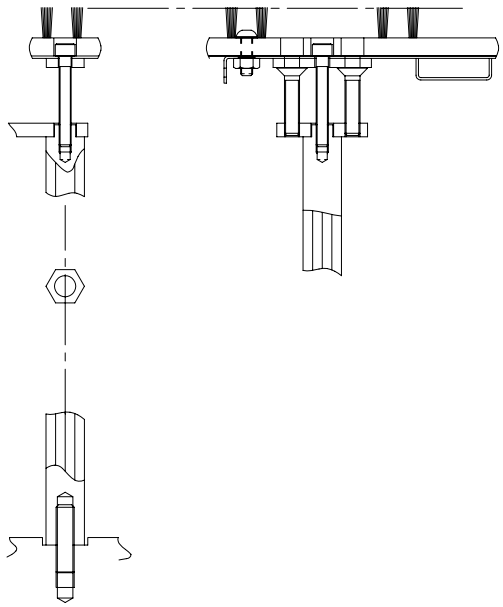

SECTION B–B

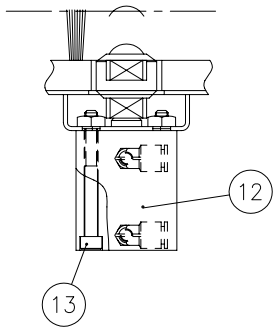

SECTION C–C
(20 Sets)

6876521
(6872447A)

Unit No. 249

US Line (CR)-C(11) From Serial No.36102001 and after

Index	Code	Parts Name	Drawing No.	Type	Maker	Q'ty	Note
1	74419174	Center Brush Base (F)	6872501			1	
2	74419175	Center Brush Base (R)	6872502			1	
3	74417278	MDF Brush (C)	6873276 A			2	3.2mm
3	74419176	MDF Brush (C)	6878316			2	4.5mm
4	74722756	Button Head Screw	P334500021	M8X25		10	
5	74419119	MDF Brush (C6)	6872503			2	3.2mm
5	74419177	MDF Brush (C6)	6878317			2	4.5mm
6	74722756	Button Head Screw	P334500021	M8X25		8	
7	74417276	MDF Brush (CF)	6871321 A			1	
8	74417277	MDF Brush (CR)	6871322 A			1	
9	74722756	Button Head Screw	P334500021	M8X25		10	
10	74417279	Locating Pin Cover	6871323			1	
11	74183316	Button Head Screw	P334500020	M8X20		4	
12	74568610	Cylinder	7832804 A	SSD-L-25-15-T5V5-H	CKD	1	
13	74706157	Hex Soc Cap Screw	P330210015	M5X50		4	

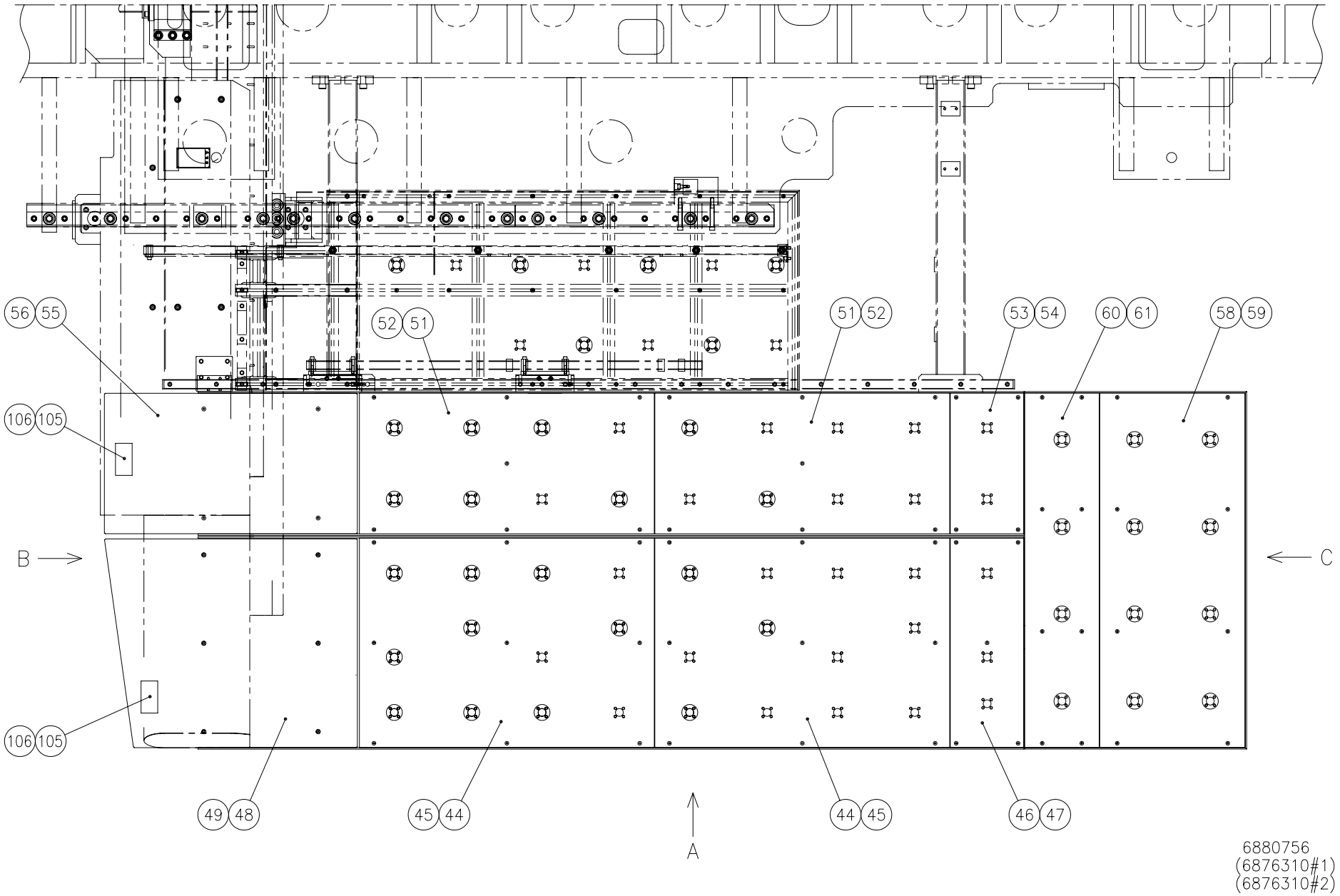
56 55
106 105
52 51
51 52
53 54
60 61
58 59
B
C
106 105
49 48
45 44
44 45
46 47
A
6880756
(6876310#1)
(6876310#2)

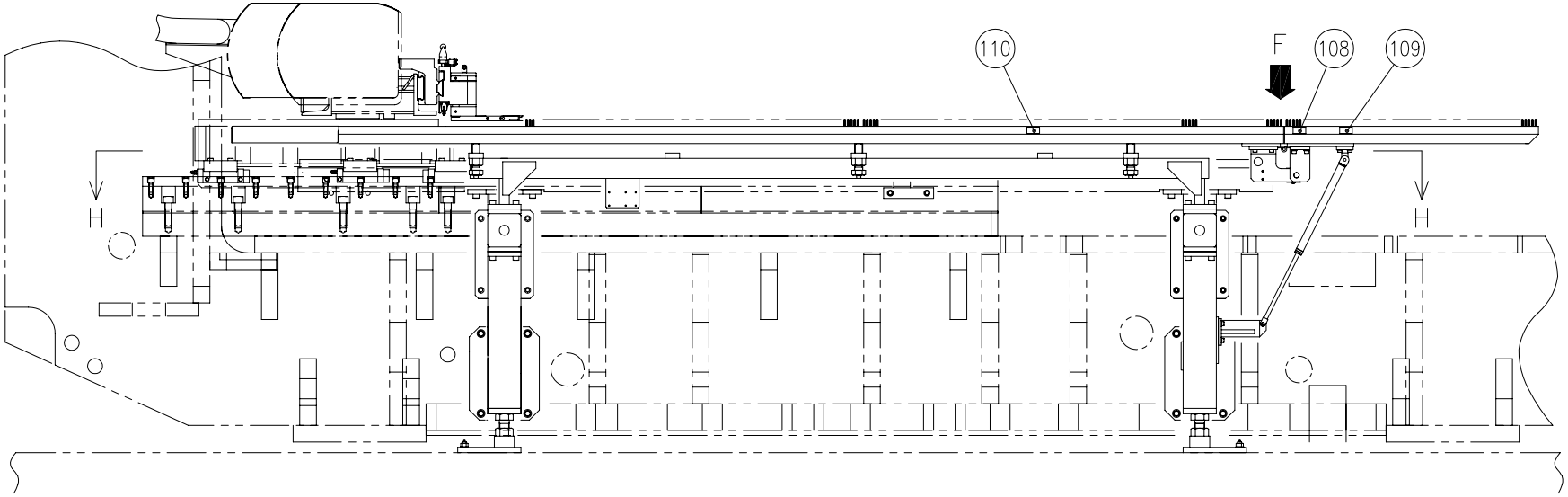

VIEW A

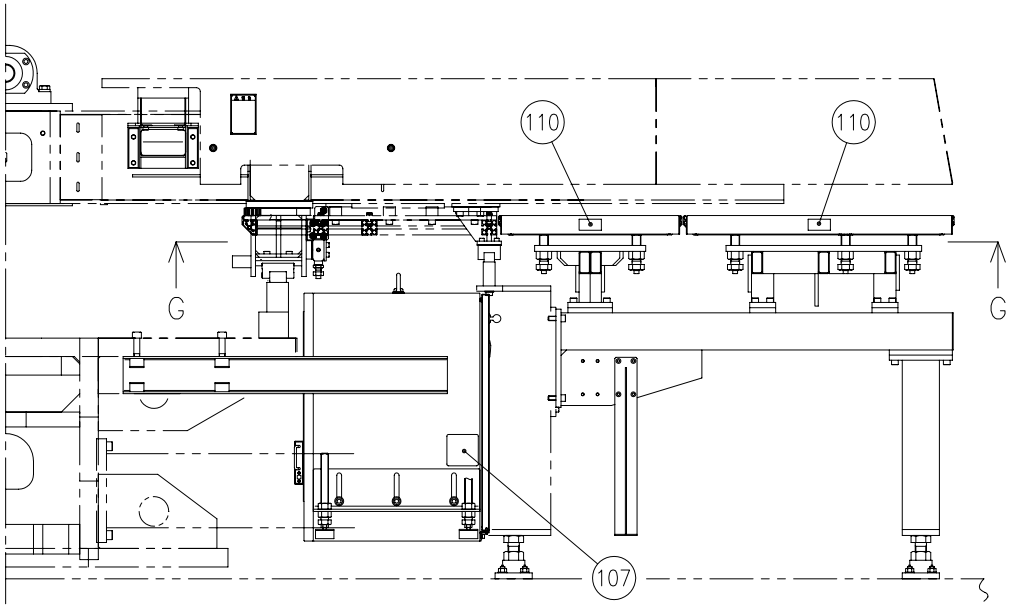

VIEW B

6880756
(6876310#1)
(6876310#2)

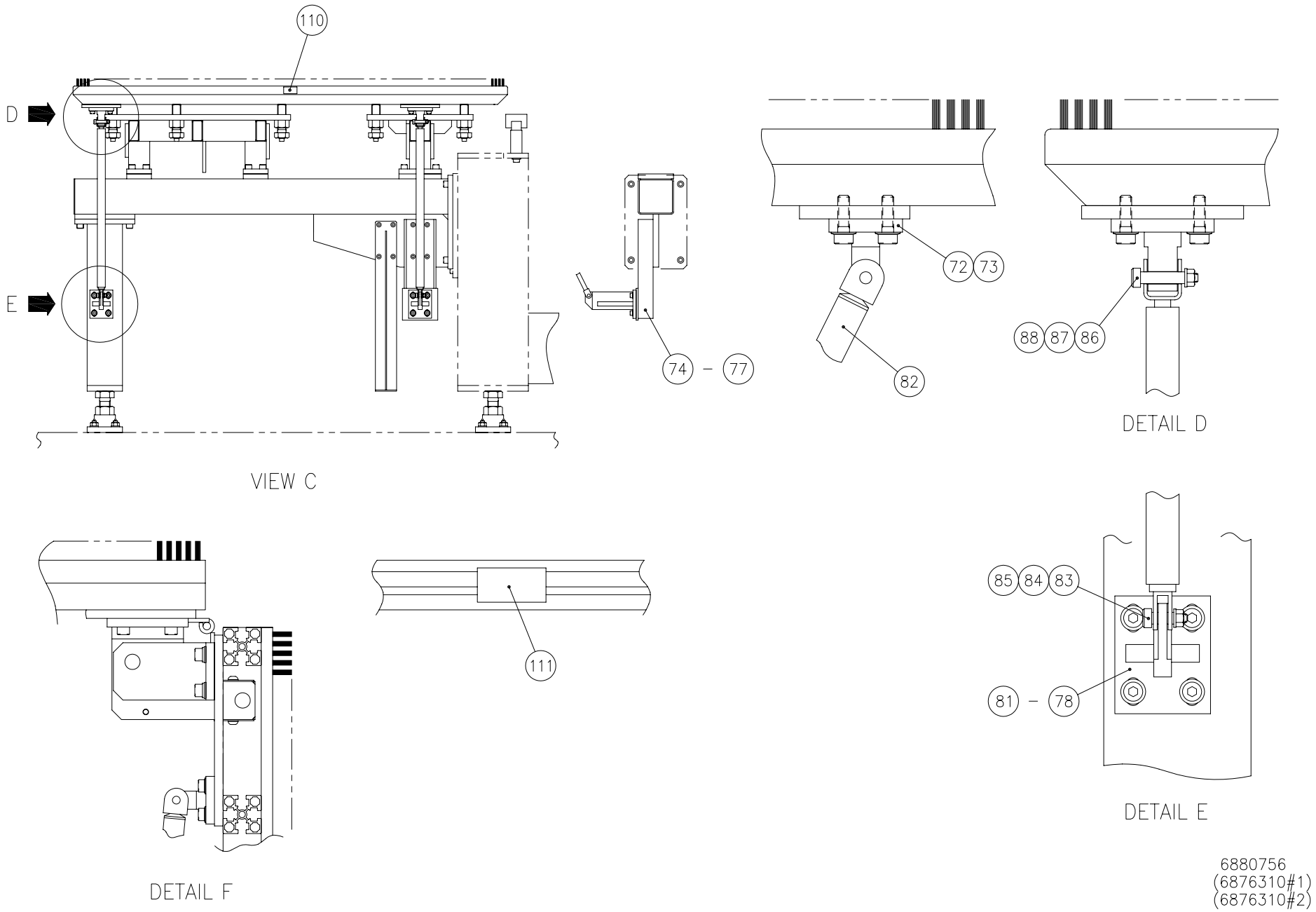
110
D
E
VIEW C
74 – 77
72 73
82
88 87 86
DETAIL D
111
DETAIL F
85 84 83
81 – 78
DETAIL E
6880756
(6876310#1)
(6876310#2)

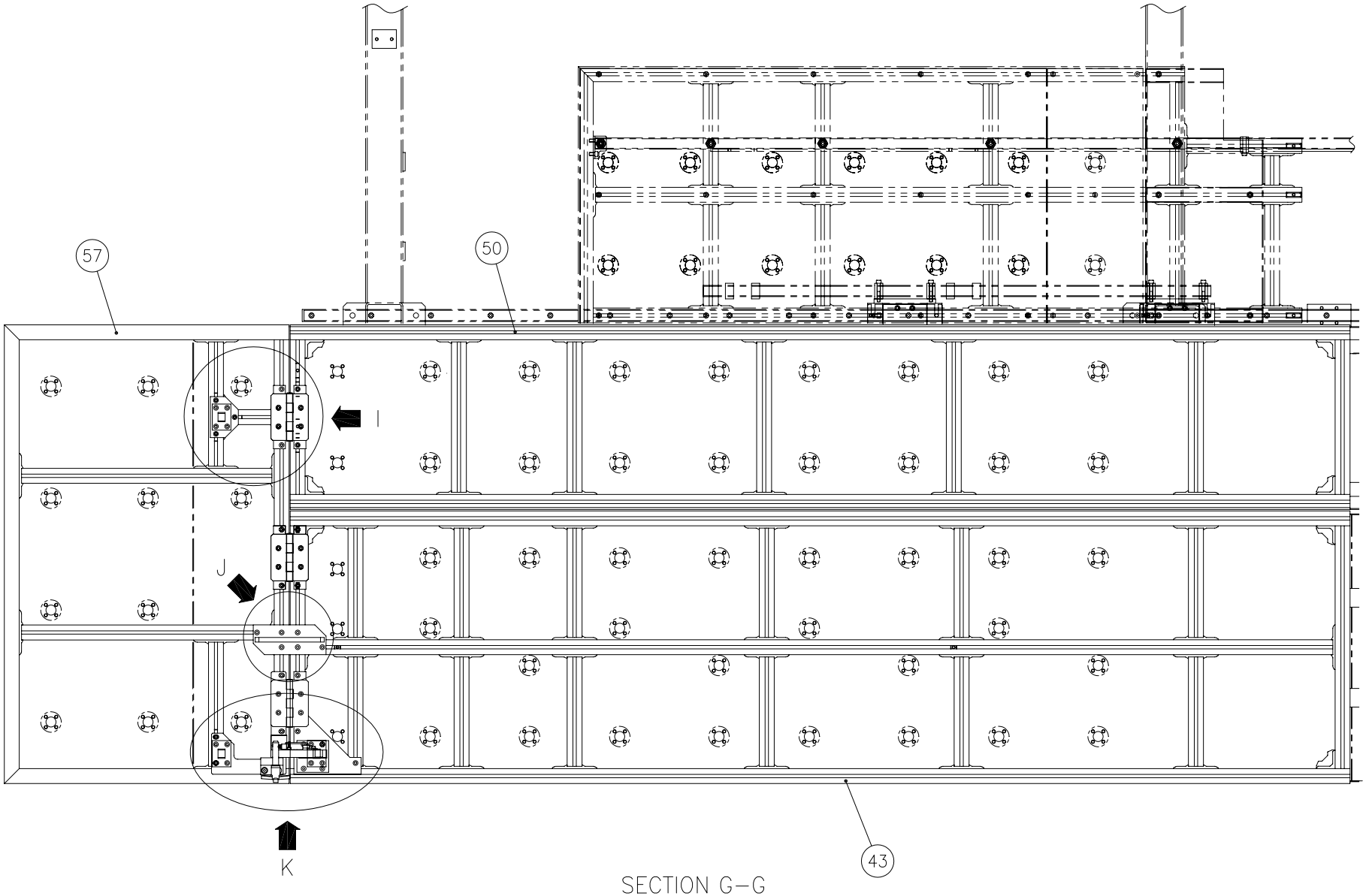

6880756
(6876310#1)
(6876310#2)

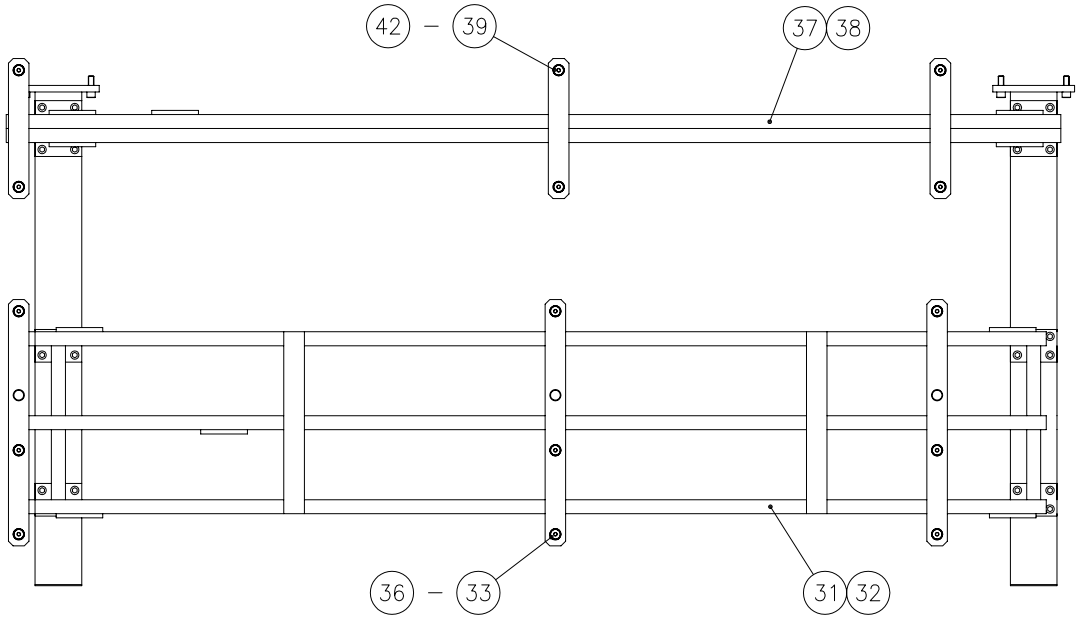

SECTION H–H

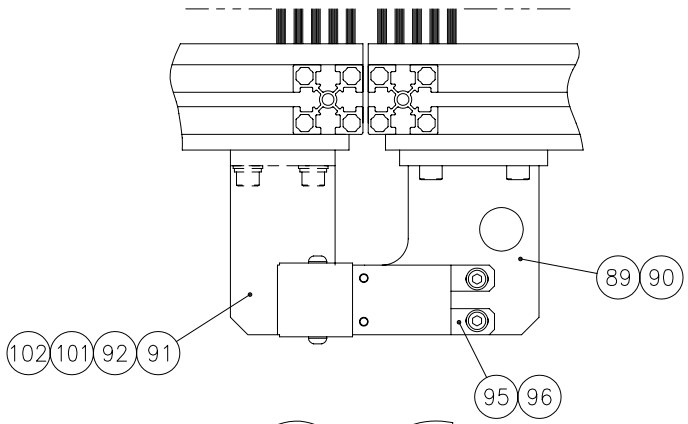

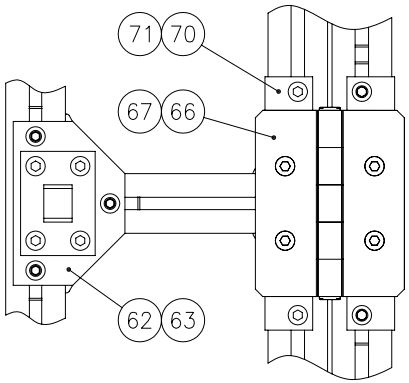

DETAIL I

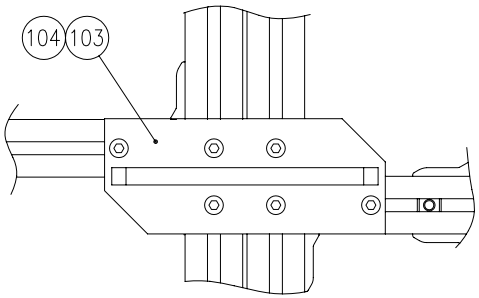

DETAIL J

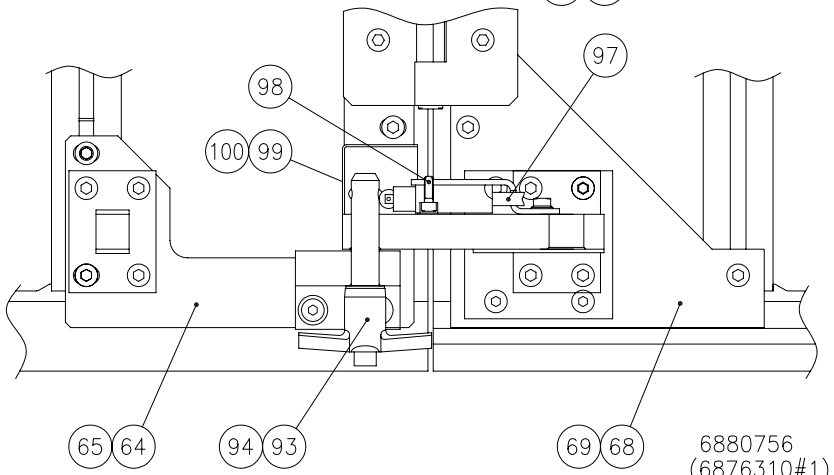

6880756
(6876310#1)
(6876310#2)

DETAIL K

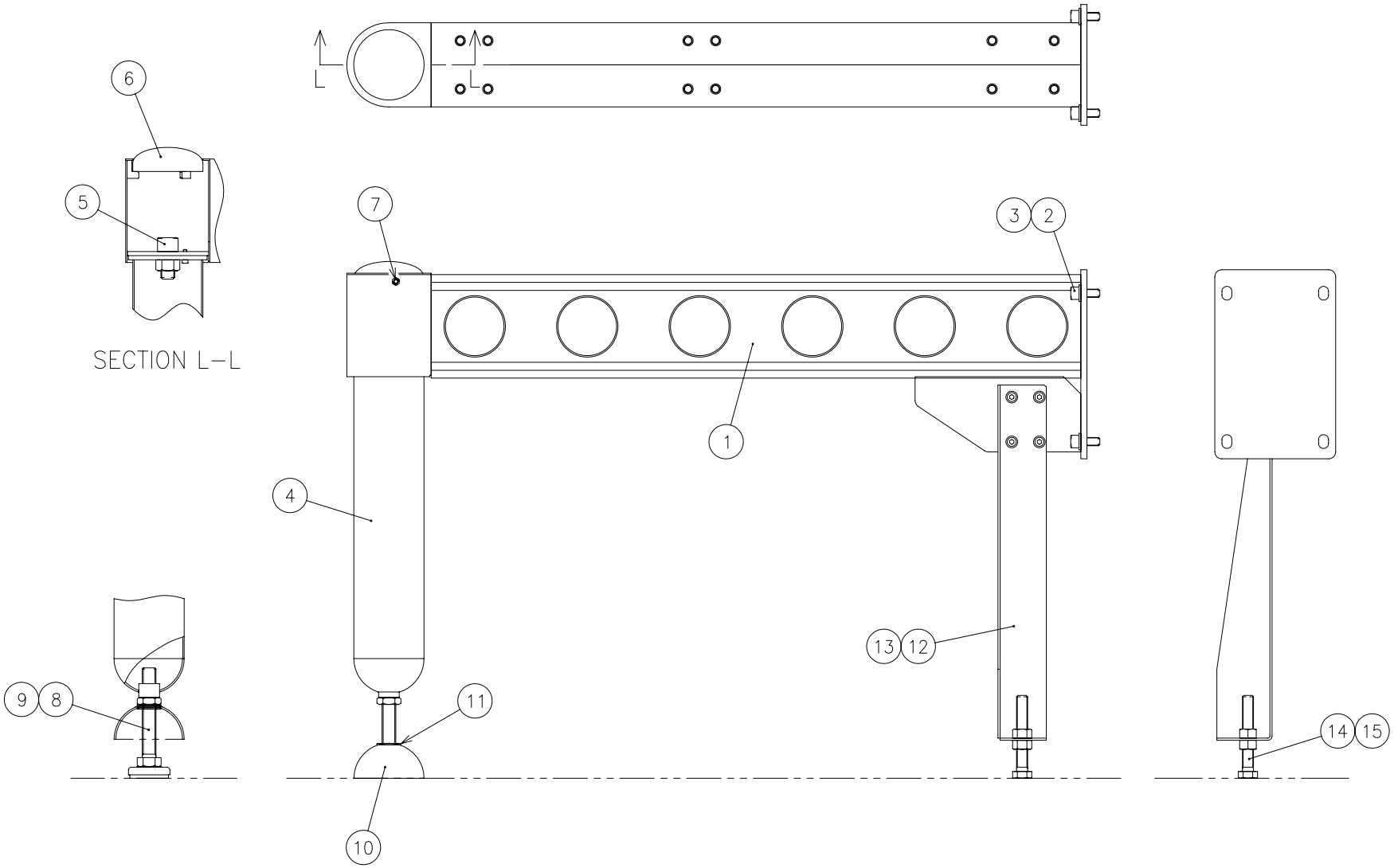

6879685

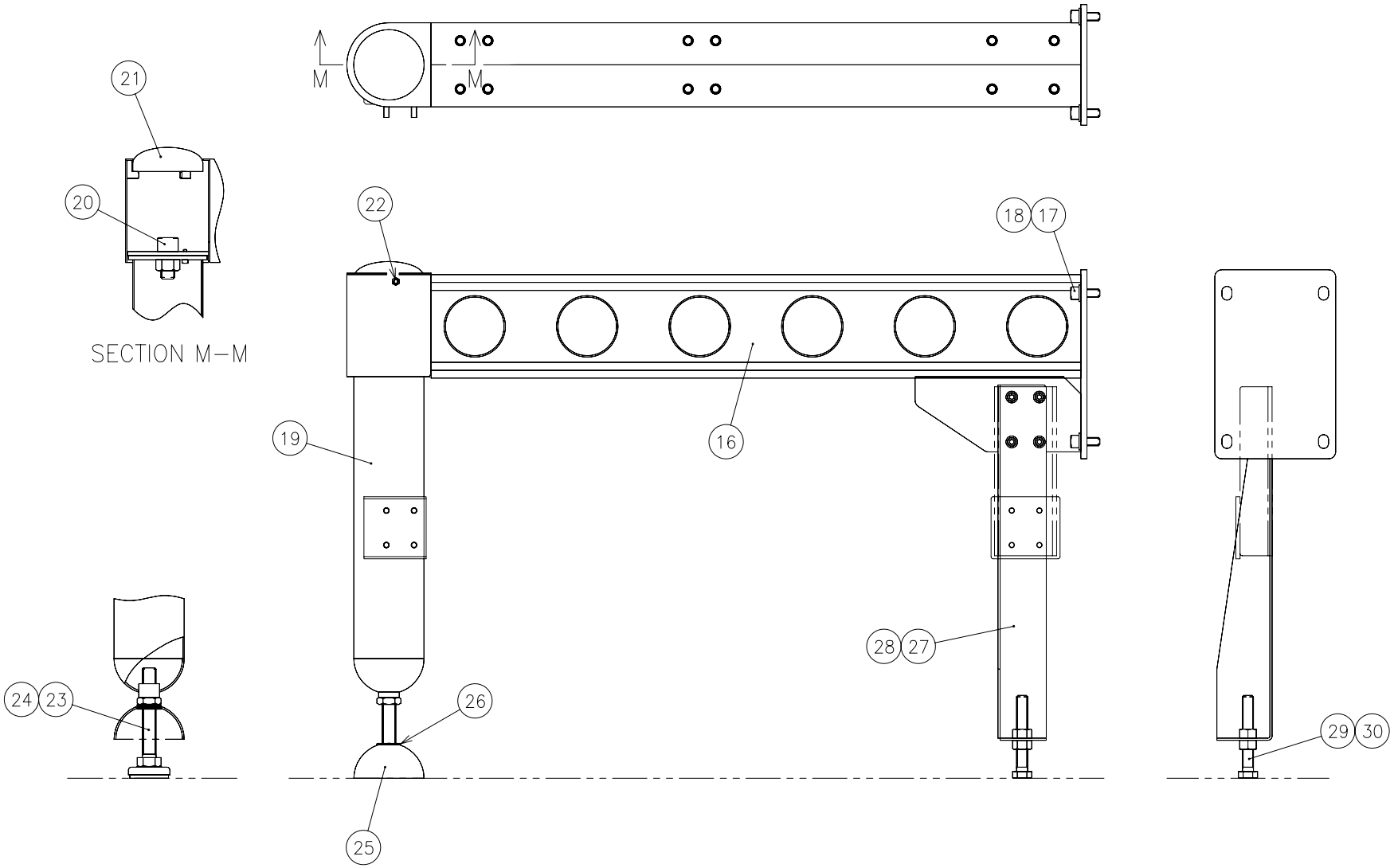

6879662

Index	Code	Parts Name	Drawing No.	Type	Maker	Q'ty	Note
1	74419472	Side Table Base (R)	380787100A			1	
2	36367655	Hex Soc Cap Screw	P330250005	M12X30		4	
3	86613931	Washer	P336000008	12(Regular Round)		4	
4	74419473	Stand	6879686			1	
5	36320521	Hex Soc Cap Screw	P330270003	M20X40		1	
6	74419474	Cap	6879678			1	
7	86620204	Socket Set Screw	P330590019	M6X10(Cup-end)		1	
8	74570064	Level Adjuster	P384022021	KC-280-0	TAKIGEN	1	
9	10380040	Nut	P332000023	M20(Thin)		1	
10	74419475	Level Adjuster Cover	3807879			1	
11	31100028	Bush For Cable	P229112053	C-30-NG-79-Q	TAKIGEN	1	
12	74419476	Shipping Bracket	3807874 A			1	
13	75420815	Flange Socket Bolt	P330468001	M8X20	NISSAN NEJI	4	
14	36163072	Bolt	P330060076	M16X120(All-thread)		1	
15	86611630	Nut	P332000066	M16(Type-1)		1	
16	74419472	Side Table Base (R)	380787100A			1	
17	36367655	Hex Soc Cap Screw	P330250005	M12X30		4	
18	86613931	Washer	P336000008	12(Regular Round)		4	
19	74419484	Stand (RT)	6879680			1	

Index	Code	Parts Name	Drawing No.	Type	Maker	Q'ty	Note
20	36320521	Hex Soc Cap Screw	P330270003	M20X40		1	
21	74419474	Cap	6879678			1	
22	86620204	Socket Set Screw	P330590019	M6X10(Cup-end)		1	
23	74570064	Level Adjuster	P384022021	KC-280-0	TAKIGEN	1	
24	10380040	Nut	P332000023	M20(Thin)		1	
25	74419475	Level Adjuster Cover	3807879			1	
26	31100028	Bush For Cable	P229112053	C-30-NG-79-Q	TAKIGEN	1	
27	74419476	Shipping Bracket	3807874 A			1	
28	75420815	Flange Socket Bolt	P330468001	M8X20	NISSAN NEJI	4	
29	36163072	Bolt	P330060076	M16X120(All-thread)		1	
30	86611630	Nut	P332000066	M16(Type-1)		1	
31	74418401	Side Table Frame (1)	6872490			1	
32	36110743	Hex Soc Cap Screw	P330250006	M12X35		16	
33	74569742	Jack Screw	6821834			9	
34	71371592	Nut	P332000011	M24		9	
35	79316161	Hex Soc Cap Screw	P330230024	M8X110		9	
36	79567109	Washer	P336000006	8(Regular Round)		9	
37	74418402	Side Table Frame (2)	6872491			1	
38	36110743	Hex Soc Cap Screw	P330250006	M12X35		8	

Index	Code	Parts Name	Drawing No.	Type	Maker	Q'ty	Note
39	74569742	Jack Screw	6821834			6	
40	71371592	Nut	P332000011	M24		6	
41	79316161	Hex Soc Cap Screw	P330230024	M8X110		6	
42	79567109	Washer	P336000006	8(Regular Round)		6	
43	74419485	Fixed Table (R) A	7830943 B		NIC	1	
44	74571312	MDF Brush (K-4)	6823663 A			2	
45	74722756	Button Head Screw	P334500021	M8X25		18	
46	74418404	MDF Brush (K-9)	6872492			1	
47	74722756	Button Head Screw	P334500021	M8X25		5	
48	74415470	Cover Table (R-1)	6823014 A			1	
49	79565423	Hex Soc Cap Screw	P330230004	M8X15		6	
50	74418405	Fixed Table (R) B	7830944		NIC	1	
51	74415176	MDF Brush (K-1)	6823635			2	3.2mm
51	74575212	MDF Brush (K-1)	6823846			2	4.5mm
52	74722756	Button Head Screw	P334500021	M8X25		14	
53	74418406	MDF Brush (K-10)	6872493			1	3.2mm
53	74418407	MDF Brush (K-10)	6878329			1	4.5mm
54	74722756	Button Head Screw	P334500021	M8X25		4	
55	74415449	Cover Table (F-2)	6823844 A			1	

Index	Code	Parts Name	Drawing No.	Type	Maker	Q'ty	Note
56	79565423	Hex Soc Cap Screw	P330230004	M8X15		4	
57	74418408	Open And Shut Table	7830946		NIC	1	
58	74571313	MDF Brush (K-7)	6823664 A			1	
59	74722756	Button Head Screw	P334500021	M8X25		8	
60	74418409	MDF Brush (K-11)	6872494 A			1	
61	74722756	Button Head Screw	P334500021	M8X25		8	
62	74569784	Gas Spring Plate	6821854			1	
63	79564804	Hex Soc Cap Screw	P330230006	M8X20		3	
64	74571320	Hinge Plate (1)	6823674 A			1	
65	79564804	Hex Soc Cap Screw	P330230006	M8X20		3	
66	74383136	Hinge Add.Works	6579383	B-1001-2		3	
67	86612728	Hex Soc Cap Screw	P330230002	M8X12		12	
68	74569786	Hinge Plate (2)	6821856			1	
69	79564804	Hex Soc Cap Screw	P330230006	M8X20		3	
70	74569787	Hinge Plate (3)	6821857			4	
71	79564804	Hex Soc Cap Screw	P330230006	M8X20		8	
72	74575218	Gas Spring Bracket (2)	6822978 A			2	
73	75420636	Flange Socket Bolt	P330468003	M8X25	NISSAN NEJI	8	
74	74419486	Gas Spring Bracket (3)	6879679			1	

Index	Code	Parts Name	Drawing No.	Type	Maker	Q'ty	Note
75	73114706	Flange Socket Bolt	P330468002	M8X30	NISSAN NEJI	4	
76	74300504	Nut	P332000005	M8		4	
77	79567109	Washer	P336000006	8(Regular Round)		4	
78	74575220	Gas Spring Bracket (1)	6823003			2	
79	75420636	Flange Socket Bolt	P330468003	M8X25	NISSAN NEJI	4	
80	74300504	Nut	P332000005	M8		4	
81	79567109	Washer	P336000006	8(Regular Round)		4	
82	74387138	Gas Spring	P317555029	50UX0	TAKACHIHO	2	
83	74560042	Shoulder Bolt	P338134013	MSB8-15	MISUMI	2	
84	79565419	Washer	P336000005	6(Regular Round)		2	
85	44274544	Nut	P332000004	M6		2	
86	74379250	Shoulder Bolt	P338134019	MSB8-30	MISUMI	2	
87	79565419	Washer	P336000005	6(Regular Round)		2	
88	44274544	Nut	P332000004	M6		2	
89	74415472	Pin Bracket	6870270			1	
90	79566121	Hex Soc Cap Screw	P330230007	M8X25		4	
91	74415473	Pin Bracket (2)	6822980 B			1	
92	79566121	Hex Soc Cap Screw	P330230007	M8X25		2	
93	74569793	Locating Pin	P337108002	BJ773-16050	IMAO Mfg	1	

Index	Code	Parts Name	Drawing No.	Type	Maker	Q'ty	Note
94	79573416	Hex Soc Cap Screw	P330210003	M5X10		1	
95	74415474	LS Bracket	6822981 D			1	
96	45252001	Flange Socket Bolt	P330460003	M6X15		2	
97	74415962	Cable S-18 (1)	6820258 B			1	
98	79316109	Hex Soc Cap Screw	P330210006	M5X15		2	
99	74415475	LS Cover	6870271			1	
100	36379029	Button Head Screw	P334500013	M6X10		2	
101	79567109	Washer	P336000006	8(Regular Round)		2	
102	86610326	Spring Washer	P336050006	8		2	
103	74569796	Shipping Bracket	6821858			1	
104	79564804	Hex Soc Cap Screw	P330230006	M8X20		6	
105	71362136	Legend Plate (Warning)(3)	6045924			2	English
105	71362135	Legend Plate (Warning)(3) FRA	6045078			2	French
105	71362137	Legend Plate (Warning)(3) GER	6046718			2	German
105	71362138	Legend Plate (Warning)(3) ITA	6046728			2	Italian
105	74415924	Legend Plate (Warning)(3)	6816795			2	Chinese
106	74326603	Blind Rivet	P339208001	NTA3-2	LOBTEX	8	
107	74419480	Legend Plate (Caution) E	3809322	(DO NOT LIFT HERE)		2	English
107	74419481	Legend Plate (Caution) F	3809323			2	French

Index	Code	Parts Name	Drawing No.	Type	Maker	Q'ty	Note
107	74419479	Legend Plate (Caution) G	3809321			2	German
107	74419482	Legend Plate (Caution) I	3809324			2	Italian
107	74419478	Legend Plate (Caution) C	3809319			2	Chinese
108	74415366	Legend Plate (OPEN) B (ENG)	6870230			1	English
108	74415368	Legend Plate (OPEN) B (FRA)	6870231			1	French
108	74415367	Legend Plate (OPEN) B (GER)	6870229			1	German
108	74415365	Legend Plate (OPEN) B (ITA)	6870232			1	Italian
108	74419487	Legend Plate (OPEN) B	6817542			1	Chinese
109	74415370	Legend Plate (Caution)ENG.	6870239			1	English
109	74415372	Legend Plate (Caution)FRA.	6870240			1	French
109	74415371	Legend Plate (Caution)GER.	6870238			1	German
109	74415369	Legend Plate (Caution)ITA.	6870241			1	Italian
109	74419488	Legend Plate (Caution)	6817524			1	Chinese
110	71130447	Legend Plate (Do Not Get On)	0840546			4	
111	74417425	Legend Plate (Warning)	6828694			2	
112	74379098	Charging Mark	P360200003	JISB6015-80H		1	List Only
113	74419483	Adhesive Tape	P379108025	FE-6061 (20mm)	FANTAC	5	1M (List Only)

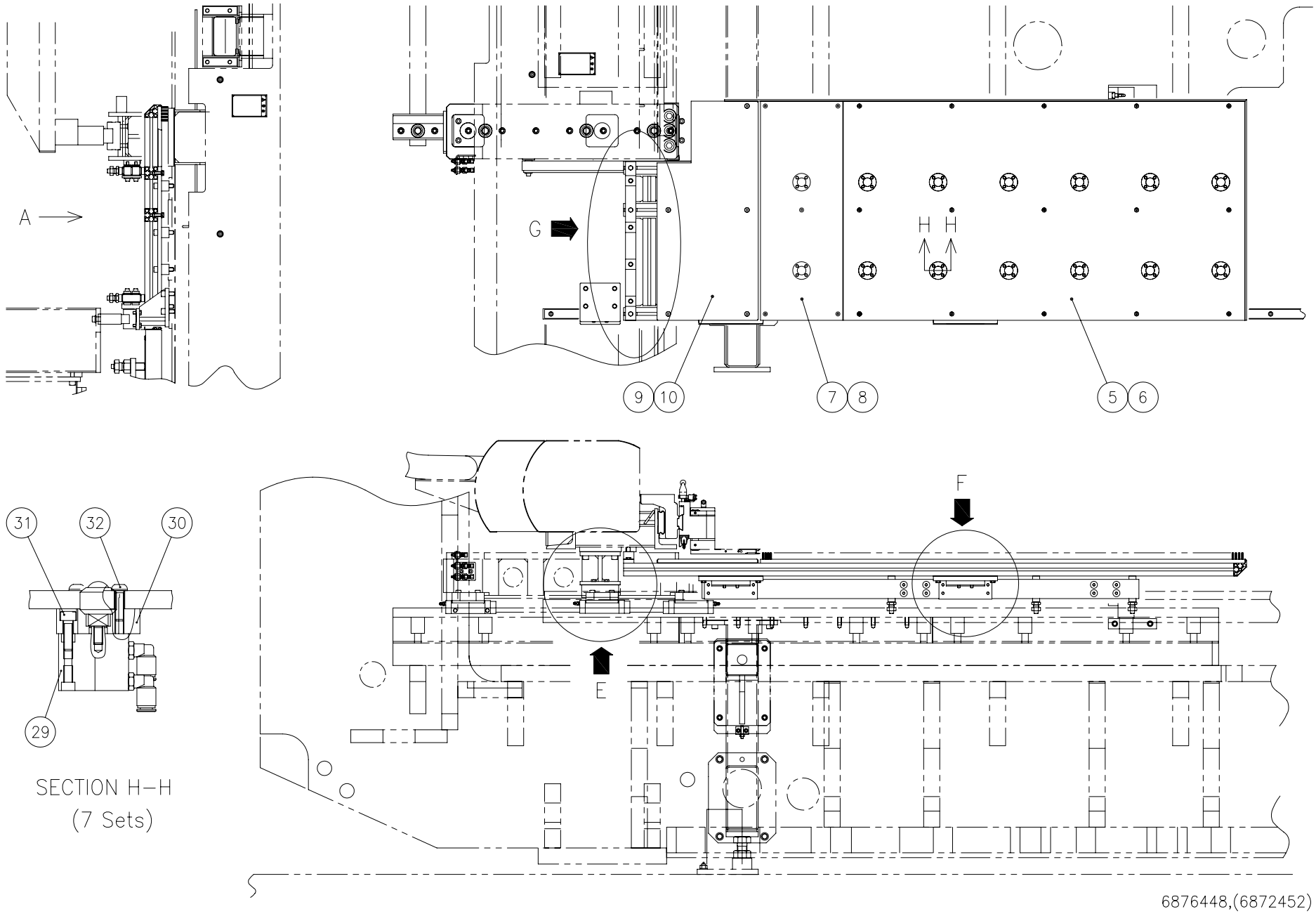
A
G
H H
9
10
7
8
5
6
31
32
30
29
SECTION H–H
(7 Sets)
F
E
6876448,(6872452)

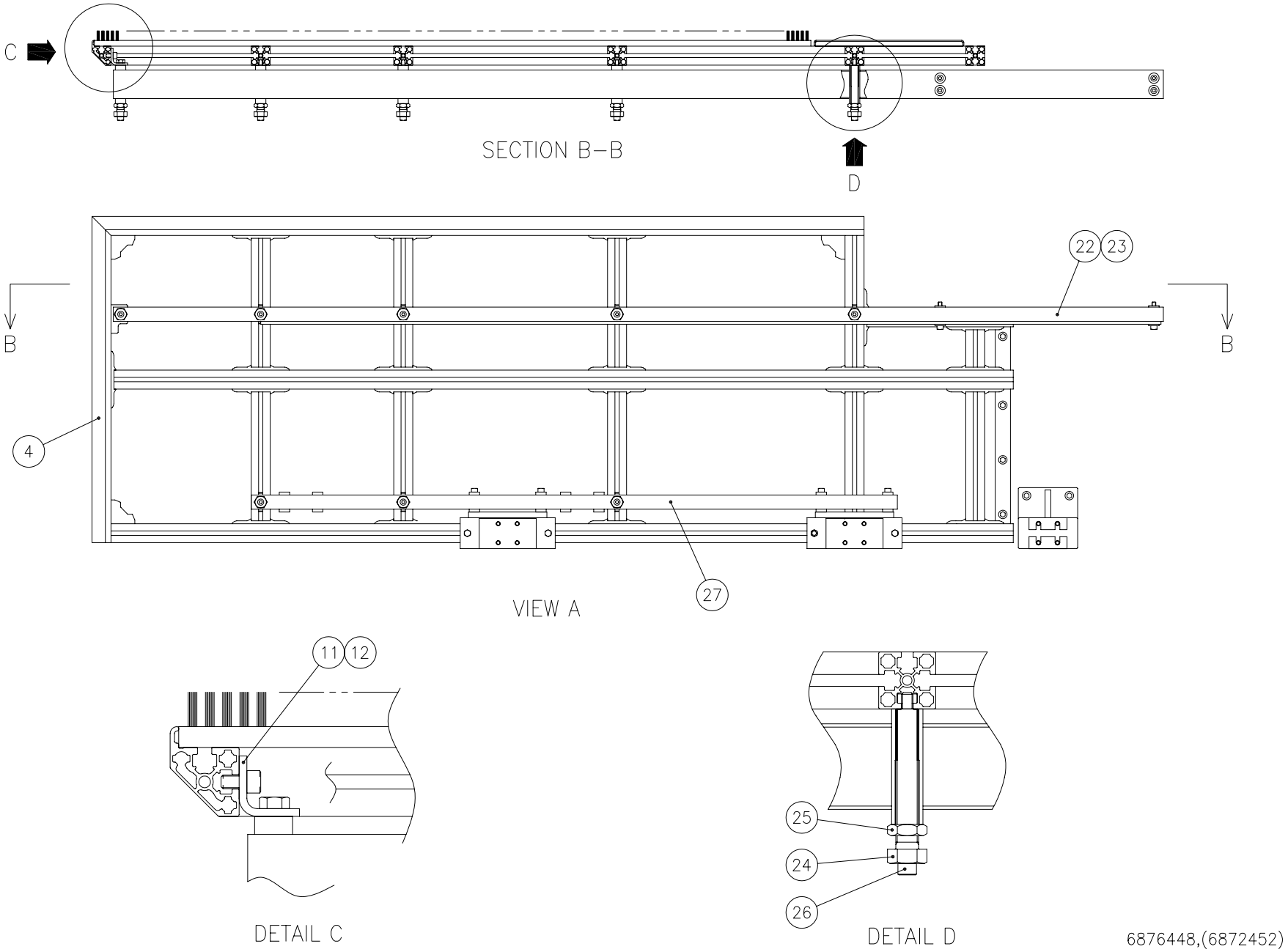
C
SECTION B–B
D
22
23
B
B
4
27
VIEW A
11
12
DETAIL C
25
24
26
DETAIL D
6876448,(6872452)

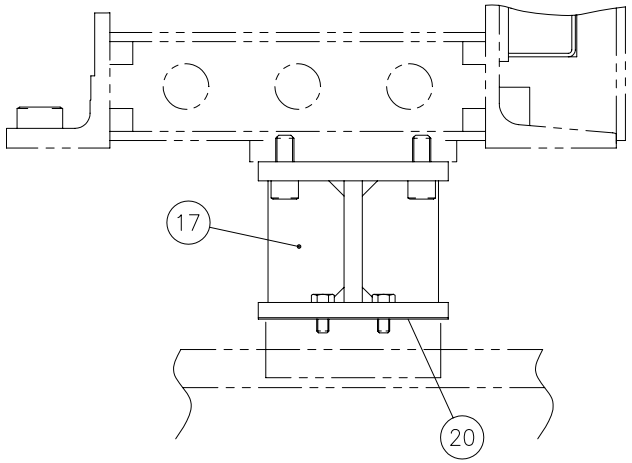

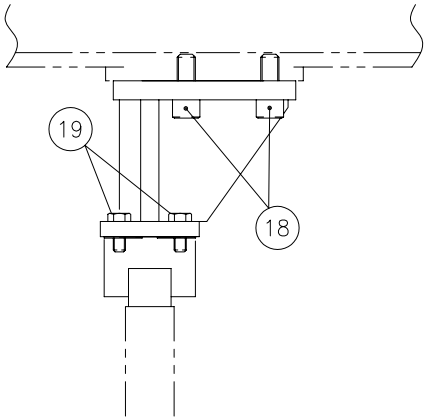

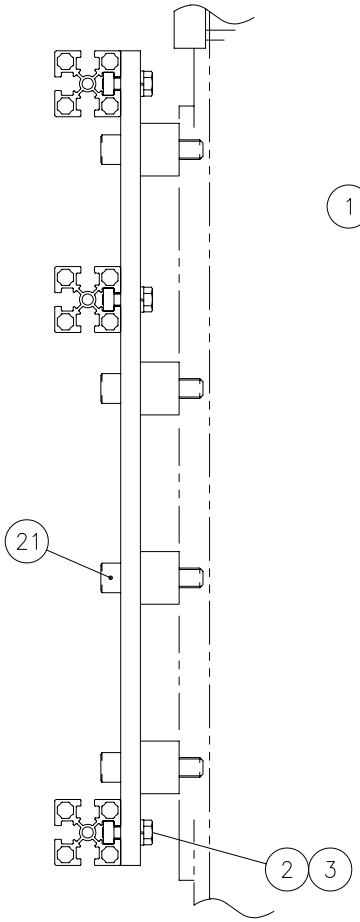

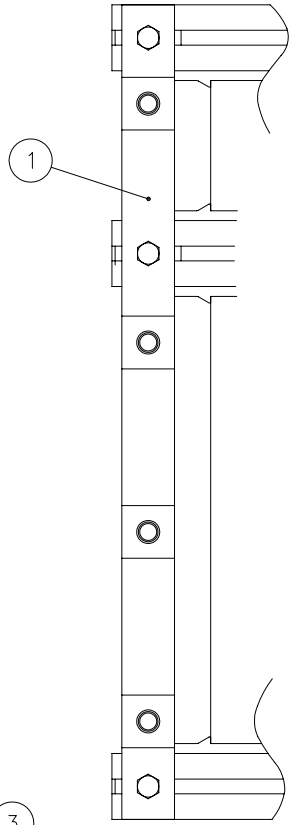

DETAIL G

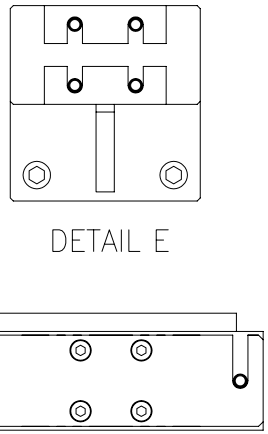

DETAIL E

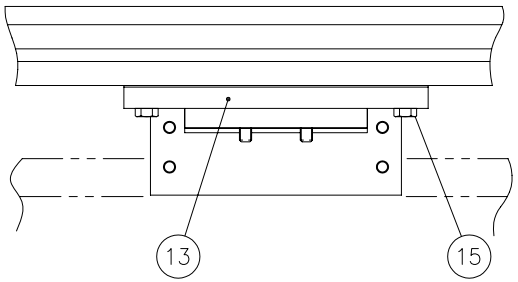

DETAIL F

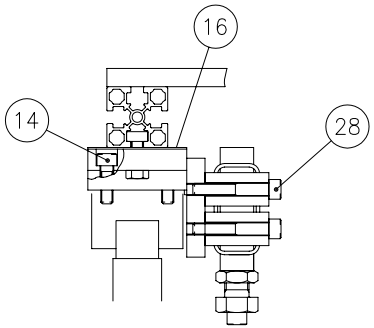

6876448,(6872452)

Index	Code	Parts Name	Drawing No.	Type	Maker	Q'ty	Note
1	74415465	Table Spacer	6828647			1	
2	74183005	Bolt	P330030007	M8X25		3	
3	86610326	Spring Washer	P336050006	8		3	
4	74418395	Moving Table (R)	7830945		NIC	1	
5	74415175	MDF Brush (I-1)	6823682			1	3.2mm
5	74571284	MDF Brush (I-1)	6823627 A			1	4.5mm
6	74722756	Button Head Screw	P334500021	M8X25		15	
7	74578826	MDF Brush (I-2)	6823683			1	3.2mm
7	74571327	MDF Brush (I-2)	6823628 A			1	4.5mm
8	74722756	Button Head Screw	P334500021	M8X25		5	
9	74415466	Cover Table (S-R)	6828662			1	
10	79565423	Hex Soc Cap Screw	P330230004	M8X15		5	
11	74415467	Angle	6828651 A			1	
12	79565423	Hex Soc Cap Screw	P330230004	M8X15		2	
13	74418396	LM Support	6872480			2	
14	79566121	Hex Soc Cap Screw	P330230007	M8X25		8	
15	74183005	Bolt	P330030007	M8X25		4	
16	74571308	Shim	6823604			2	
17	74415468	Moving Table Bracket	6828648			1	

Index	Code	Parts Name	Drawing No.	Type	Maker	Q'ty	Note
18	36367655	Hex Soc Cap Screw	P330250005	M12X30		4	
19	36176605	Bolt	P330030006	M8X20		4	
20	74571309	Shim	6826306			2	
21	79316507	Hex Soc Cap Screw	P330250009	M12X50		4	
22	74418397	Table Guide	6872436	R60X30X2.3		1	
23	10443146	Hex Soc Cap Screw	P330230012	M8X50		4	
24	74415446	Adjustable Bolt	6822812 A			8	
25	78180815	Nut	P332000022	M16(Thin)		8	
26	74707962	Hex Soc Cap Screw	P330230026	M8X120		8	
27	74418398	Auxiliary Arm (1)	6872481	R60X30X2.3		1	
28	10443146	Hex Soc Cap Screw	P330230012	M8X50		8	
29	74568593	Cylinder	7832806 A	SSD-25-15	CKD	1	
30	74569774	Cylinder Collar	6821848			1	
31	79567722	Hex Soc Cap Screw	P330220009	M6X20		4	
32	74314603	Button Head Screw	P334500016	M6X20		4	

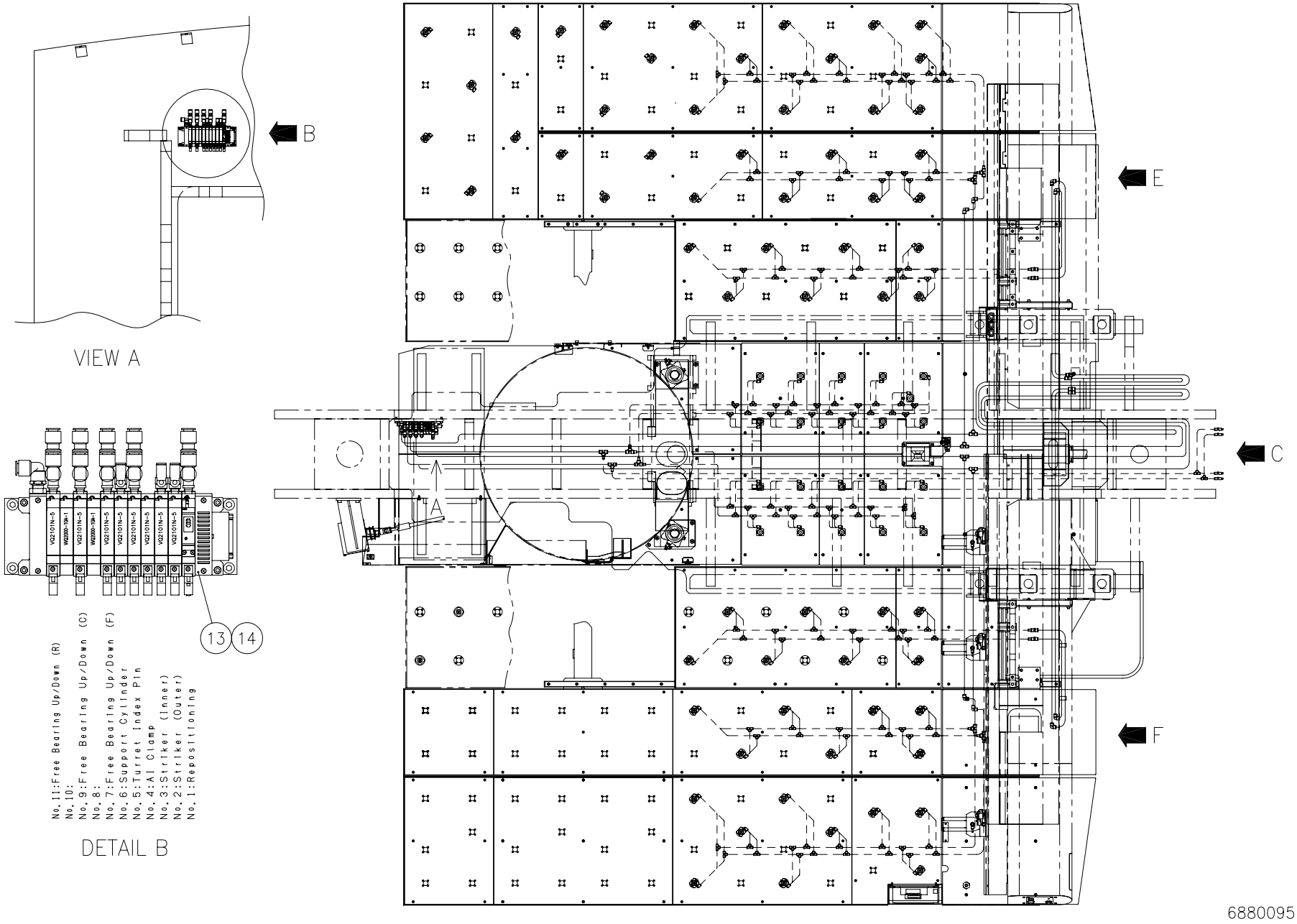
B
VIEW A
A
E
C
F
13
14
No.11:Free Bearing Up/Down (R)
No.10:
No.9:Free Bearing Up/Down (C)
No.8:
No.7:Free Bearing Up/Down (F)
No.6:Support Cylinder
No.5:Turret Index Pin
No.4:Al Clamp
No.3:Striker (Inner)
No.2:Striker (Outer)
No.1:Repositioning
DETAIL B
6880095

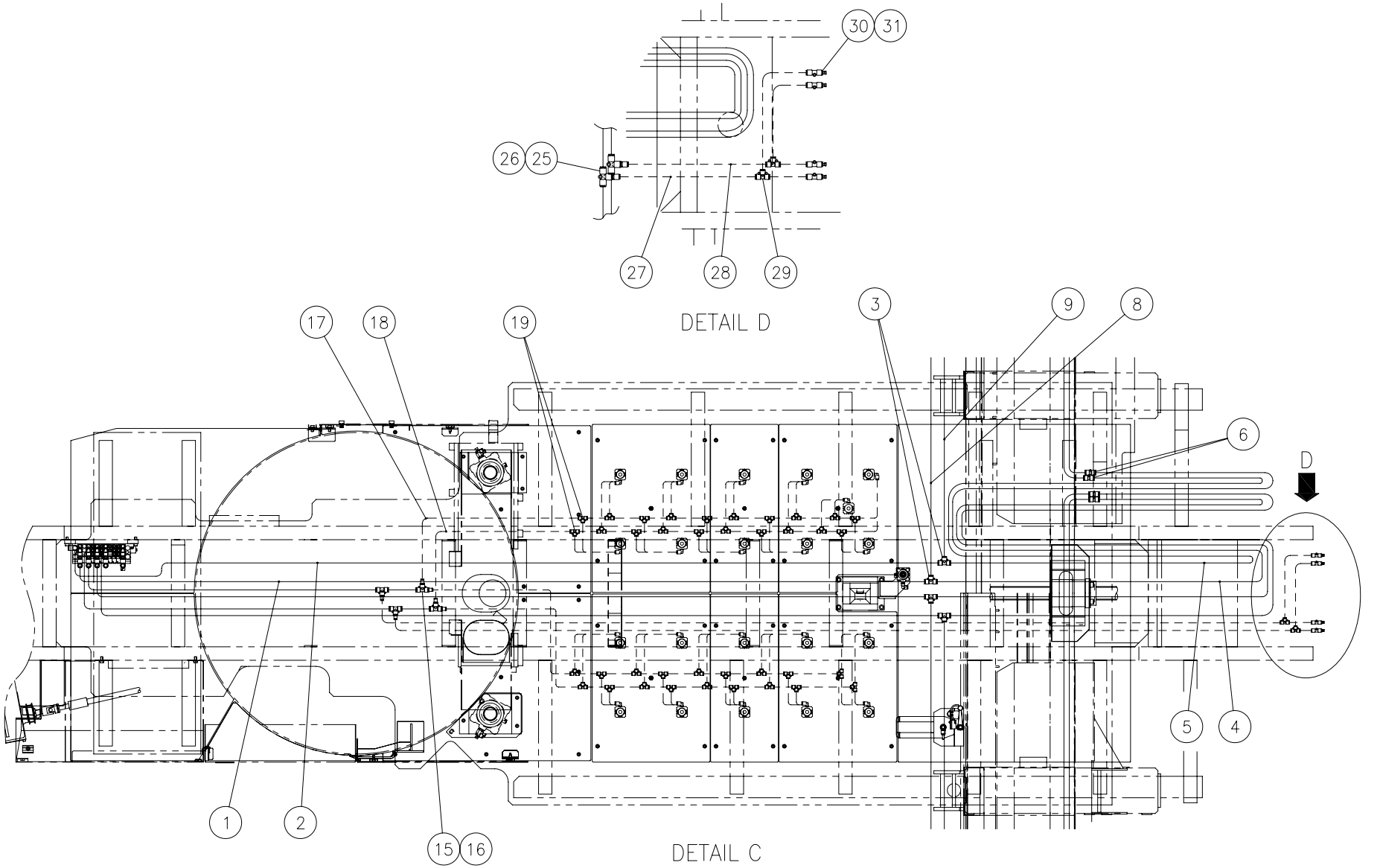

6880095

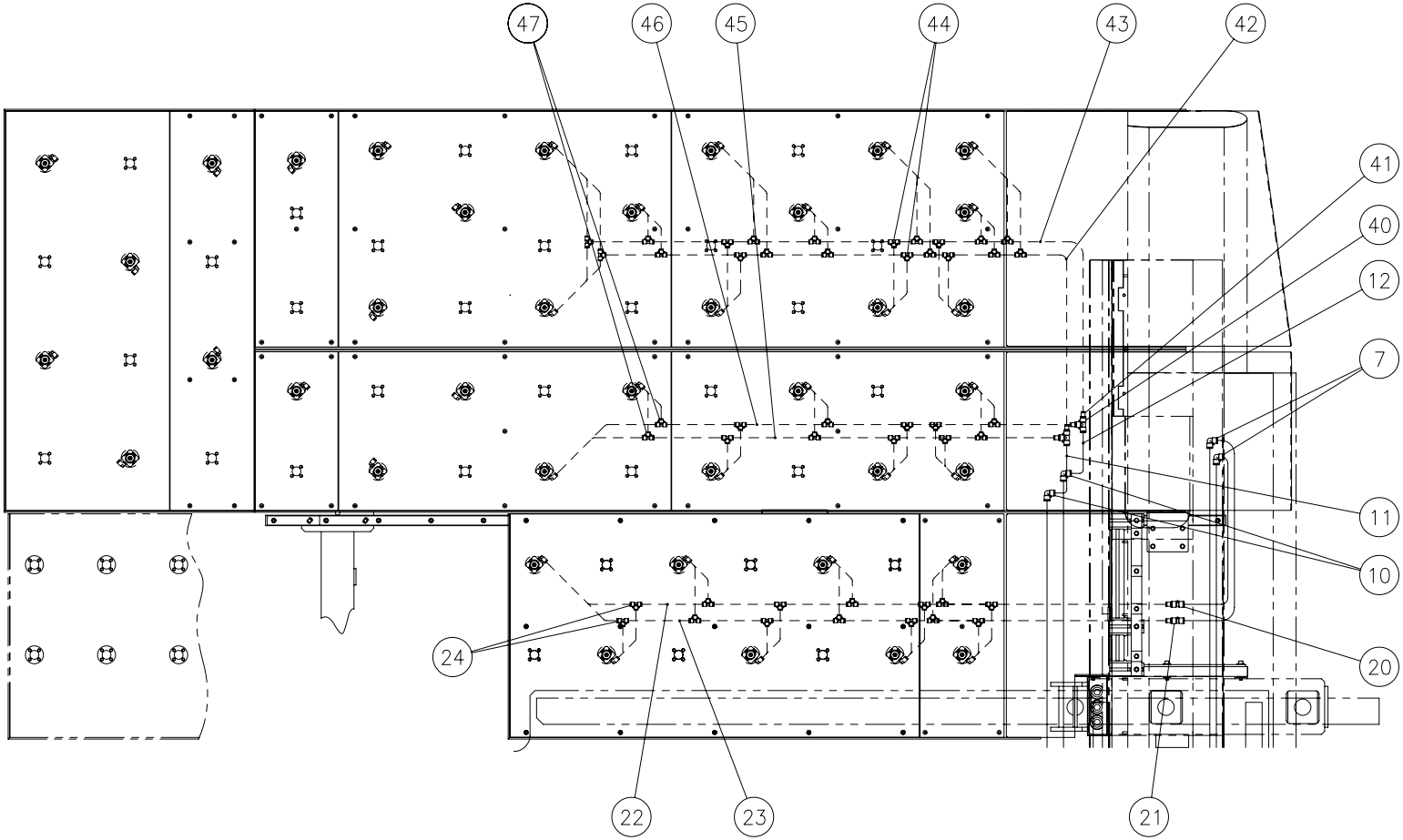

DETAIL E

6880095

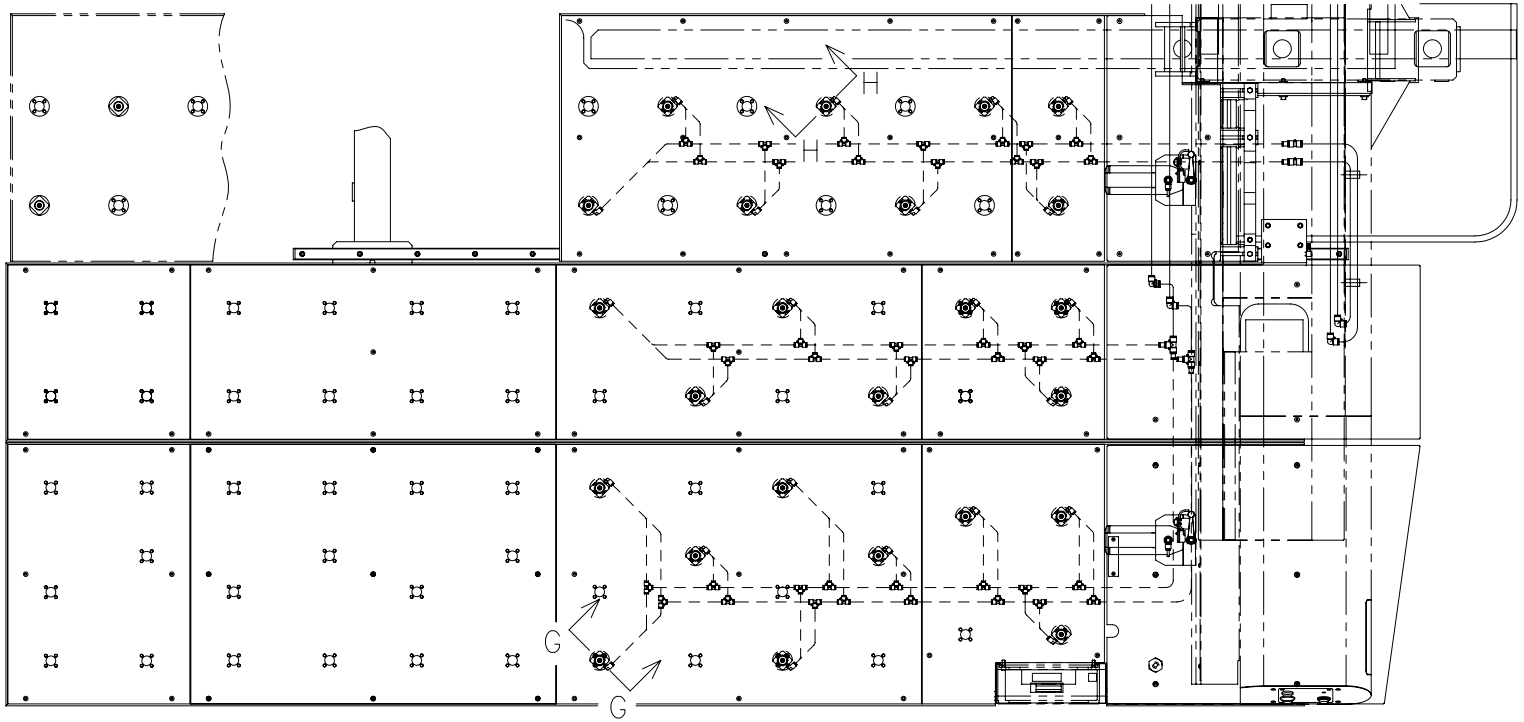

DETAIL F

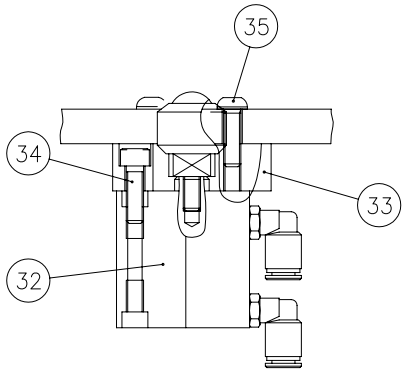

SECTION G–G (Front 16 Sets)
(Rear 18 Sets)

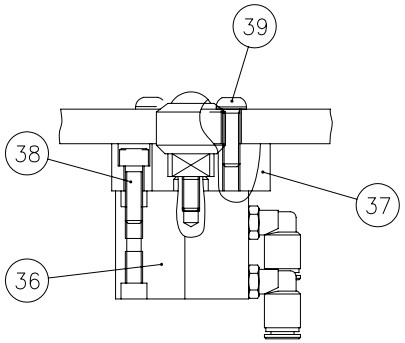

SECTION H–H (Front 16 Sets)
(Rear 18 Sets)

6880095

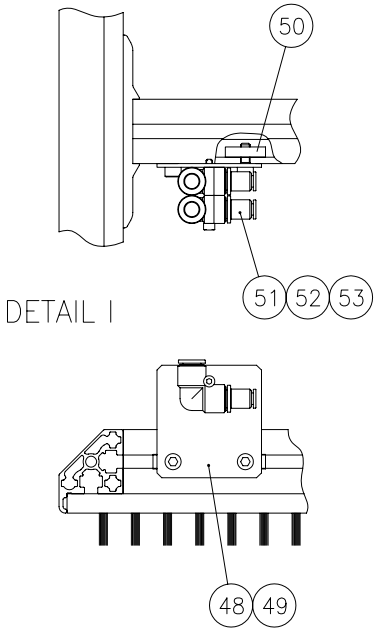

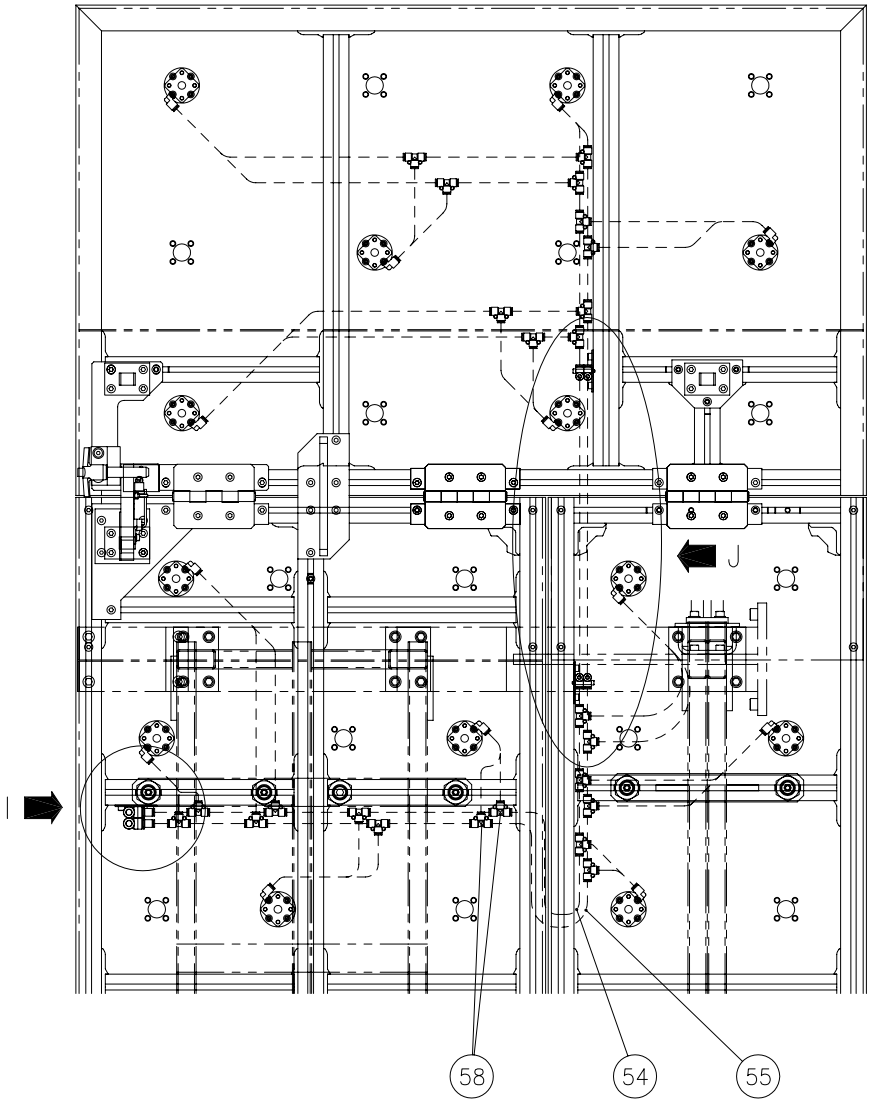

<Rear Fix Table (Back Face)>

6880095

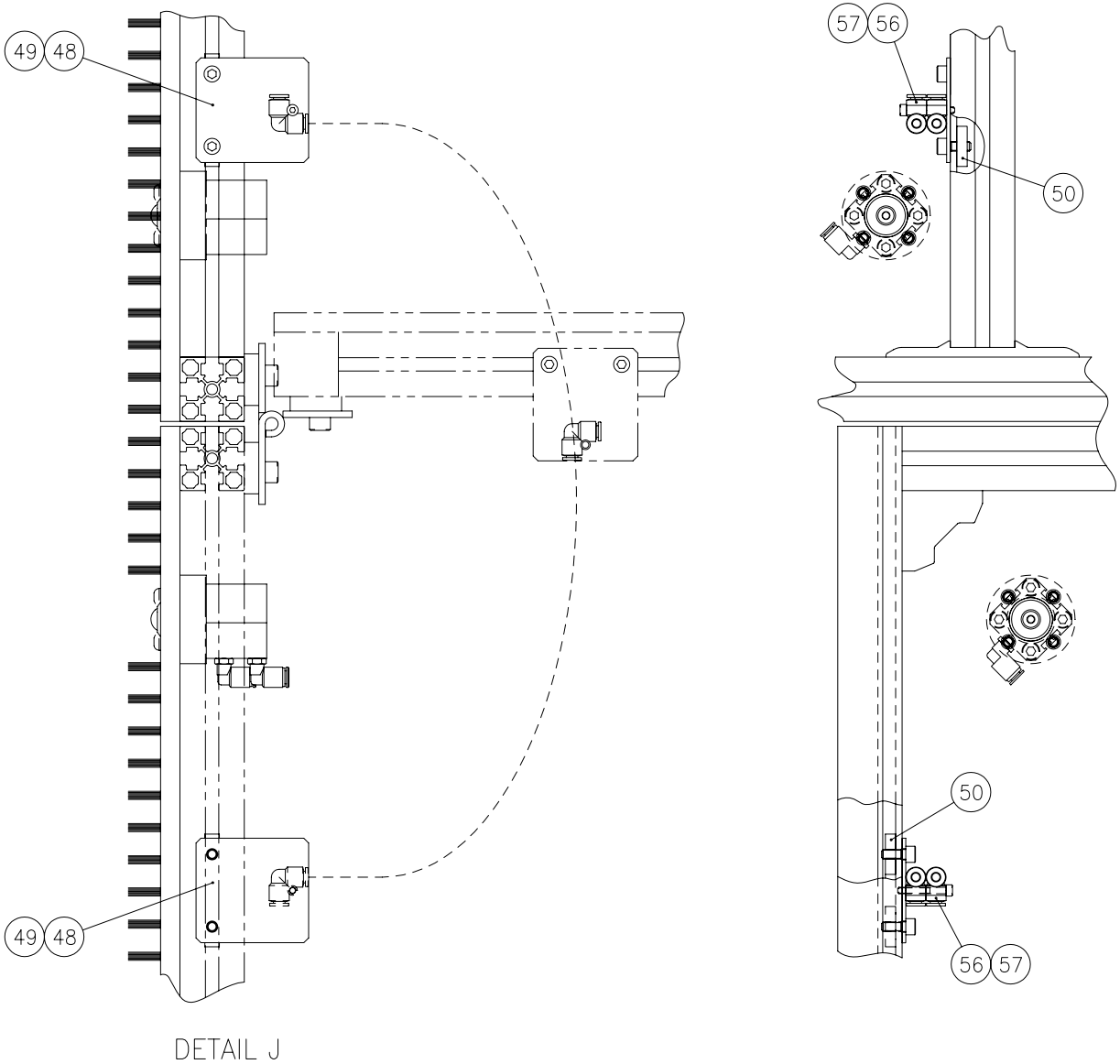

6880095

Index	Code	Parts Name	Drawing No.	Type	Maker	Q'ty	Note
1	74415489	Plastic Hose	P230242159	N2-4-10X8(Blue)-7M	NITTA MOORE	1	
2	74415487	Plastic Hose	P230242162	N2-4-10X8(Red)-7M	NITTA MOORE	1	
3	74379378	Instant Fitting	P586604013	EUT10	NITTA MOORE	2	
4	74415489	Plastic Hose	P230242159	N2-4-10X8(Blue)-7M	NITTA MOORE	1	
5	74415487	Plastic Hose	P230242162	N2-4-10X8(Red)-7M	NITTA MOORE	1	
6	74565147	Instant Fitting	P586604021	EUC10	NITTA MOORE	2	
7	74379550	Instant Fitting	P586564016	EUL10	NITTA MOORE	2	
8	74415489	Plastic Hose	P230242159	N2-4-10X8(Blue)-7M	NITTA MOORE	1	
9	74415487	Plastic Hose	P230242162	N2-4-10X8(Red)-7M	NITTA MOORE	1	
10	74379550	Instant Fitting	P586564016	EUL10	NITTA MOORE	2	
11	74415489	Plastic Hose	P230242166	N2-4-10X8(Blue)-1M	NITTA MOORE	1	
12	74415487	Plastic Hose	P230242168	N2-4-10X8(Red)-1M	NITTA MOORE	1	
13	74810502	9-Solenoid Valve	7831573	VV5Q21-11-X398	SMC	1	
14	79568702	Hex Soc Cap Screw	P330230008	M8X30		4	
15	74379378	Instant Fitting	P586604013	EUT10	NITTA MOORE	2	
16	74562784	Instant Fitting	P586654002	ER6-10	NITTA MOORE	4	
17	74415492	Plastic Hose	P230222146	N2-4-6X4(Blue)-8M	NITTA MOORE	2	
18	74415488	Plastic Hose	P230222147	N2-4-6X4(Red)-8M	NITTA MOORE	2	
19	74338327	Instant Fitting	P586604012	EUT6	NITTA MOORE	38	

Index	Code	Parts Name	Drawing No.	Type	Maker	Q'ty	Note
20	74565147	Instant Fitting	P586604021	EUC10	NITTA MOORE	2	
21	74562784	Instant Fitting	P586654002	ER6-10	NITTA MOORE	2	
22	74415492	Plastic Hose	P230222148	N2-4-6X4(Blue)-10M	NITTA MOORE	1	
23	74415488	Plastic Hose	P230222149	N2-4-6X4(Red)-10M	NITTA MOORE	1	
24	74338327	Instant Fitting	P586604012	EUT6	NITTA MOORE	14	
25	74379378	Instant Fitting	P586604013	EUT10	NITTA MOORE	2	
26	74562784	Instant Fitting	P586654002	ER6-10	NITTA MOORE	2	
27	71512277	Plastic Hose	P230222094	U2-4-6X4(Blue)-5M	NITTA MOORE	2	
28	74569814	Plastic Hose	P230222093	U2-4-6X4(Red)-5M	NITTA MOORE	2	
29	74338327	Instant Fitting	P586604012	EUT6	NITTA MOORE	2	
30	74731207	Instant Fitting	P586604019	EUC6	NITTA MOORE	4	
31	74416455	Pneumatic Plug	P586648011	BC6	NITTA MOORE	4	
32	74568610	Cylinder	7832804 A	SSD-L-25-15-T5V5-H	CKD	1	
33	74569774	Cylinder Collar	6821848			1	
34	79567722	Hex Soc Cap Screw	P330220009	M6X20		4	
35	74314603	Button Head Screw	P334500016	M6X20		4	
36	74568593	Cylinder	7832806 A	SSD-25-15	CKD	1	
37	74569774	Cylinder Collar	6821848			1	
38	79567722	Hex Soc Cap Screw	P330220009	M6X20		4	

Index	Code	Parts Name	Drawing No.	Type	Maker	Q'ty	Note
39	74314603	Button Head Screw	P334500016	M6X20		4	
40	74379378	Instant Fitting	P586604013	EUT10	NITTA MOORE	2	
41	74562784	Instant Fitting	P586654002	ER6-10	NITTA MOORE	4	
42	74415492	Plastic Hose	P230222148	N2-4-6X4(Blue)-10M	NITTA MOORE	1	
43	74415488	Plastic Hose	P230222149	N2-4-6X4(Red)-10M	NITTA MOORE	1	
44	74338327	Instant Fitting	P586604012	EUT6	NITTA MOORE	20	
45	74415492	Plastic Hose	P230222148	N2-4-6X4(Blue)-10M	NITTA MOORE	1	
46	74415488	Plastic Hose	P230222149	N2-4-6X4(Red)-10M	NITTA MOORE	1	
47	74338327	Instant Fitting	P586604012	EUT6	NITTA MOORE	12	
48	74417295	Connector Bracket	6870598			3	
49	79564305	Hex Soc Cap Screw	P330220006	M6X15		6	
50	74417296	Nut	P338908009	NAS-08-6	NIC	6	
51	74379550	Instant Fitting	P586564016	EUL10	NITTA MOORE	2	
52	74562784	Instant Fitting	P586654002	ER6-10	NITTA MOORE	2	
53	76116106	Hex Soc Cap Screw	P330200025	M4X40		1	
54	74415492	Plastic Hose	P230222148	N2-4-6X4(Blue)-10M	NITTA MOORE	1	
55	74415488	Plastic Hose	P230222149	N2-4-6X4(Red)-10M	NITTA MOORE	1	
56	74379853	Instant Fitting	P586564015	EUL6	NITTA MOORE	4	
57	86620303	Hex Soc Cap Screw	P330200023	M4X30		2	

From Serial No.36102001 and after

Index	Code	Parts Name	Drawing No.	Type	Maker	Q'ty	Note
58	74338327	Instant Fitting	P586604012	EUT6	NITTA MOORE	24	

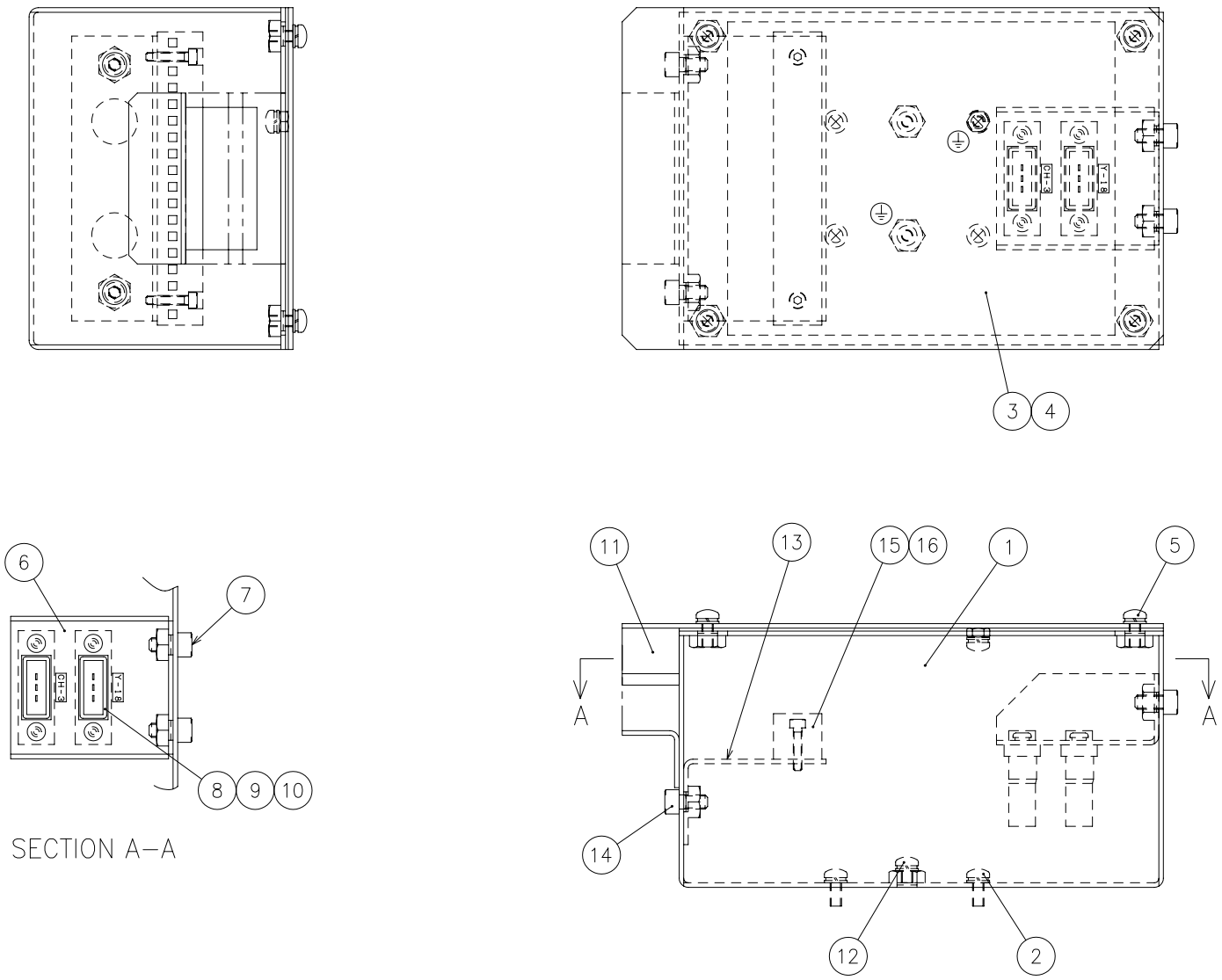

6824778

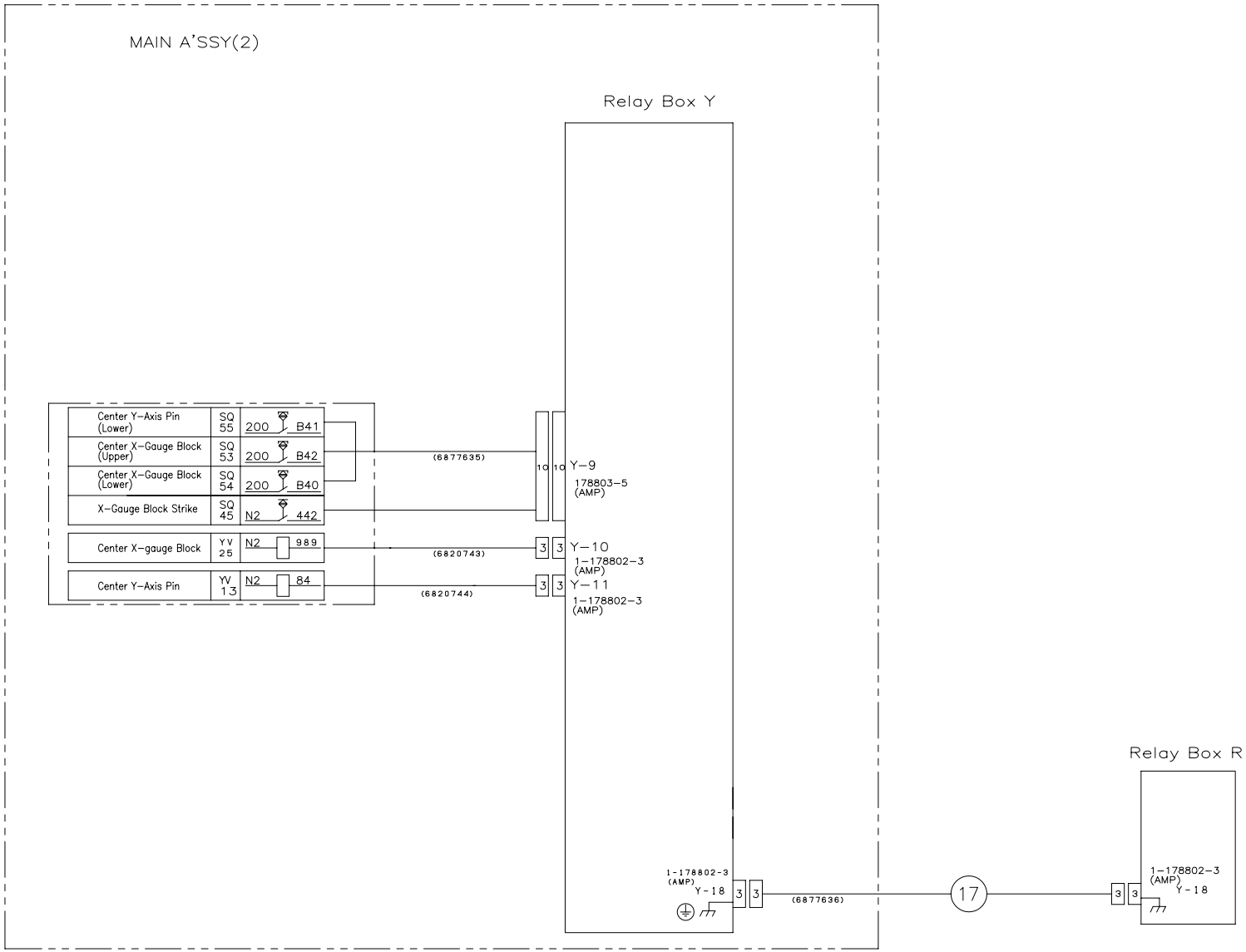

6877646
(6877711C)

Index	Code	Parts Name	Drawing No.	Type	Maker	Q'ty	Note
1	74575144	Relay Box (FC)	6824767			1	
2	74570030	Pan Head Screw with Washer	P334200115	M4X10(Chromate P-4)		4	
3	74575147	Relay Box (FC) Cover	6824768			1	
4	74575224	Packing (FC)	6824769			1	
5	74570033	Pan Head Screw with Washer	P334200134	M5X10(Chromate P-4)		4	
6	74575149	Housing Plate (FC)	6826465			1	
7	79573416	Hex Soc Cap Screw	P330210003	M5X10		2	
8	74386502	Rectangle Connector	P862042073	1-178802-3	AMP	2	
9	74386503	Plug Type Terminal	P862142036	175289-5	AMP	6	
10	74386505	Accessory For Connector	P862182002	900128-2	AMP	4	
11	74387020	Sponge Rubber	P230580063	CR-T20X20X60		2	
12	74569811	Pan Head Screw with Washer	P334200113	M4X6(Chromate P-4)		3	(Ground)
13	74575145	Bracket (F)	6824764			1	
14	79573416	Hex Soc Cap Screw	P330210003	M5X10		2	
15	74569809	Block Terminal	P864008047	MK4/16KRG	WEIDMULLER	1	
16	79316101	Hex Soc Cap Screw	P330200006	M3X15		2	
17	74419181	Cable Y-18	6877636			1	

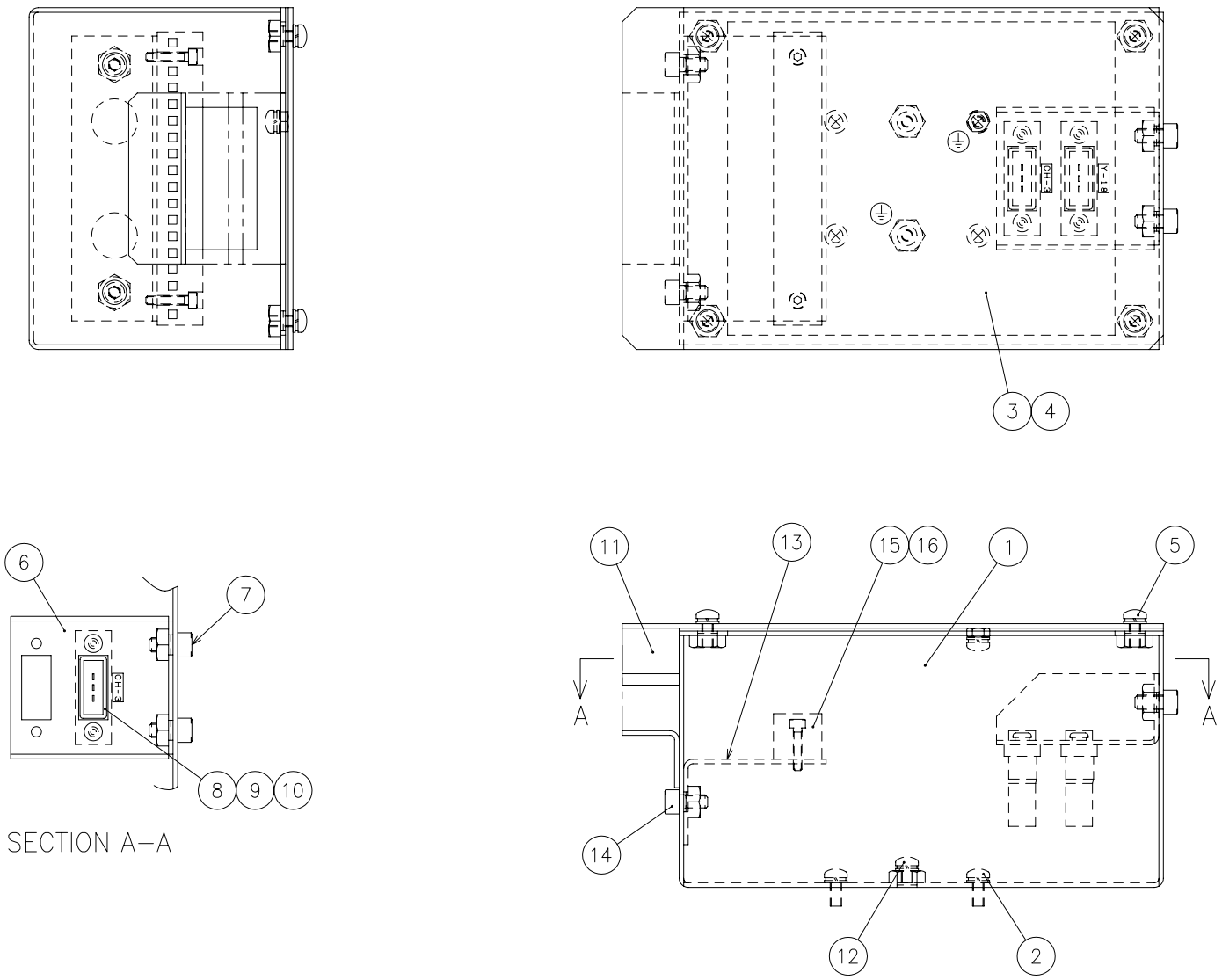

6824779

Index	Code	Parts Name	Drawing No.	Type	Maker	Q'ty	Note
1	74575144	Relay Box (FC)	6824767			1	
2	74570030	Pan Head Screw with Washer	P334200115	M4X10(Chromate P-4)		4	
3	74575147	Relay Box (FC) Cover	6824768			1	
4	74575224	Packing (FC)	6824769			1	
5	74570033	Pan Head Screw with Washer	P334200134	M5X10(Chromate P-4)		4	
6	74575149	Housing Plate (FC)	6826465			1	
7	79573416	Hex Soc Cap Screw	P330210003	M5X10		2	
8	74386502	Rectangle Connector	P862042073	1-178802-3	AMP	1	
9	74386503	Plug Type Terminal	P862142036	175289-5	AMP	3	
10	74386505	Accessory For Connector	P862182002	900128-2	AMP	2	
11	74387020	Sponge Rubber	P230580063	CR-T20X20X60		2	
12	74569811	Pan Head Screw with Washer	P334200113	M4X6(Chromate P-4)		3	(Ground)
13	74575145	Bracket (F)	6824764			1	
14	79573416	Hex Soc Cap Screw	P330210003	M5X10		2	
15	74569809	Block Terminal	P864008047	MK4/16KRG	WEIDMULLER	1	
16	79316101	Hex Soc Cap Screw	P330200006	M3X15		2	

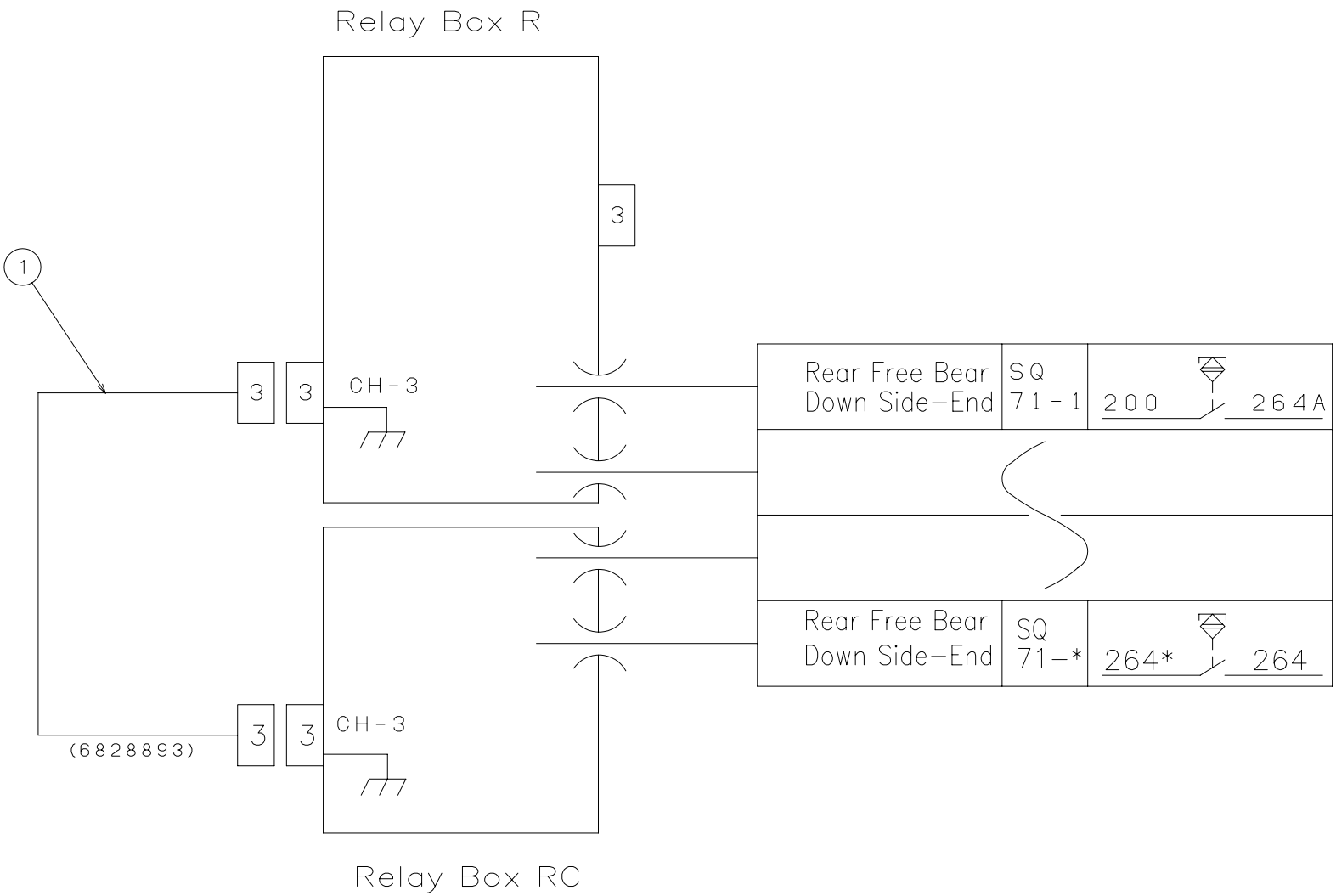

6676431
(6877711C)

Unit No. 255

US Line (CR)-C(17) From Serial No.36102001 and after

Index	Code	Parts Name	Drawing No.	Type	Maker	Q'ty	Note
1	74417293	Cable CH-3	6828893 A			1	

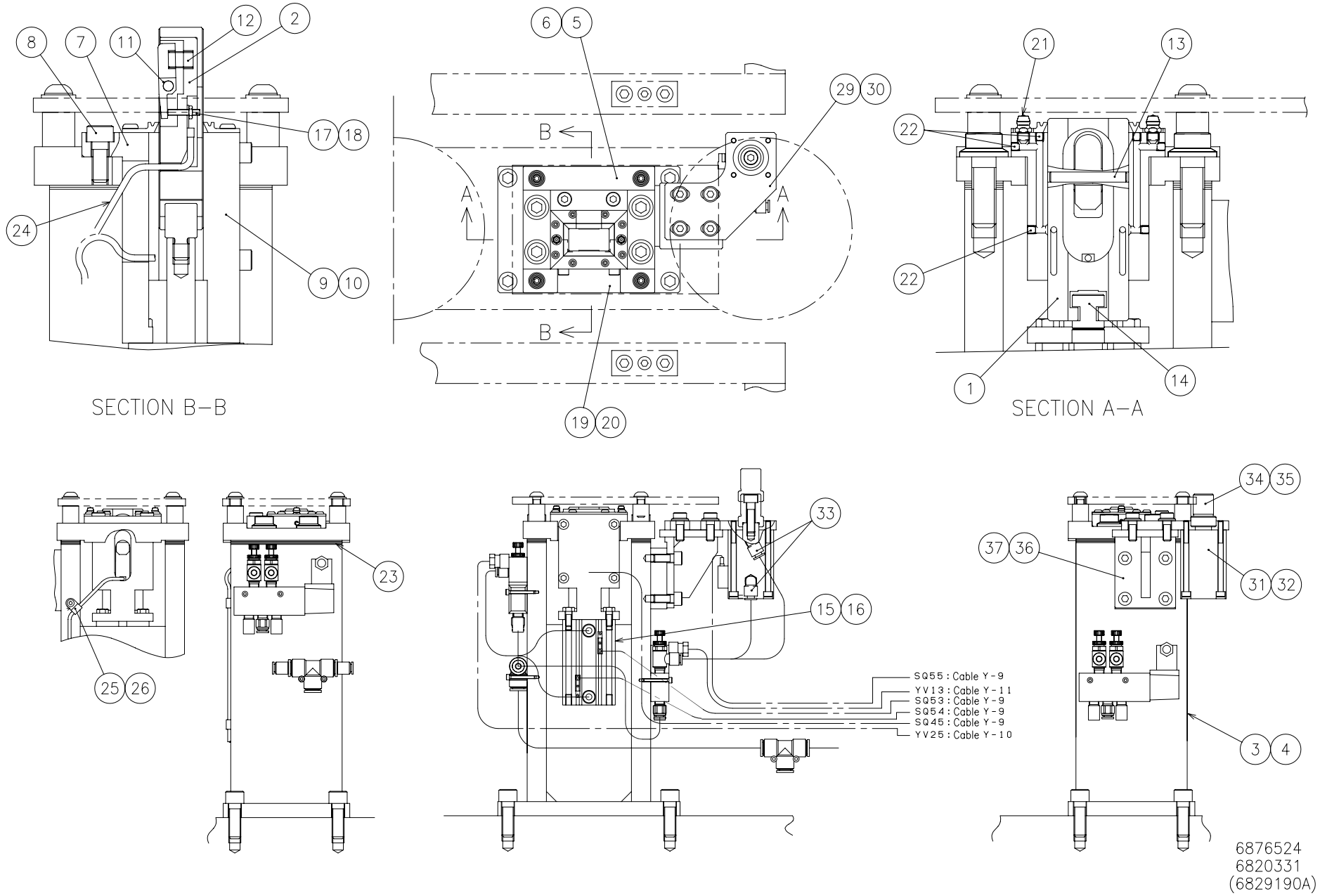
SECTION B–B
SECTION A–A
B
A
SQ55 : Cable Y-9
YV13 : Cable Y-11
SQ53 : Cable Y-9
SQ54 : Cable Y-9
SQ45 : Cable Y-9
YV25 : Cable Y-10
6876524
6820331
(6829190A)

Index	Code	Parts Name	Drawing No.	Type	Maker	Q'ty	Note
1	74570710	Stopper	6820349			1	
2	74570711	Insulator	6820350			1	
3	74578866	Locating Pin Base	6820345 A			1	
4	36110743	Hex Soc Cap Screw	P330250006	M12X35		4	
5	74417280	Locating Pin Bracket	6827662 A			1	
6	74731349	Flange Socket Bolt	P330460004	M12X35		4	
7	74578867	Guide (R)	6820359 A			1	
8	79564804	Hex Soc Cap Screw	P330230006	M8X20		2	
9	74578868	Guide (F)	6820347 A			1	
10	79565422	Hex Soc Cap Screw	P330220011	M6X25		4	
11	74573709	X-axis Touch Sensor Assy	0829974 C			1	
12	74573710	Coil Spring	P320005050	WT8-15	MISUMI	1	
13	74386149	Pin	0830525			1	
14	74570713	Floating Joint	P550082080	YU-03	SMC	1	
15	74419178	Pneumatic Cylinder		RDQA40-45D-A93V	SMC	1	
16	86620038	Bolt	P330020005	M6X15		4	
17	74573711	Socket Set Screw	P330570087	M3X15(Dog-end)-A2-70		1	
18	74570716	Nut	P332000149	M3(Type-3)-A2-70		1	
19	74386161	Slide Seal	0830529			1	

Index	Code	Parts Name	Drawing No.	Type	Maker	Q'ty	Note
20	74535406	Button Head Screw	P334500005	M4X10		8	
21	74577669	Grease Nipple	P560608004	NP6X5	THK	2	
22	74566095	Socket Set Screw	P330550007	M4X4(Flat-end)		6	
23	74570718	Shim	6820351			8	
24	74578869	Touch Sensor Cable	6820358 A			1	
25	74570719	Cable Band	P381058098	CCH12-S10-M	PANDUIT	2	
26	79573416	Hex Soc Cap Screw	P330210003	M5X10		2	
27	74382938	Terminal	P869150001	CE-1		6	List Only
28	36161077	Instant Fitting	P586533065	KQ2H06-01S	SMC	2	List Only
29	74570720	Cylinder Base	6820353			1	
30	75420815	Flange Socket Bolt	P330468001	M8X20	NISSAN NEJI	4	
31	74561552	Pneumatic Cylinder	P550012482	CDQ2BS32-25D-A73HLS	SMC	1	
32	79316115	Hex Soc Cap Screw	P330210022	M5X70		4	
33	74310045	Instant Fitting	P586564001	EL6-PT1/8	NITTA MOORE	2	
34	74561553	Center Y-axis Pin	6573832			1	
35	79568702	Hex Soc Cap Screw	P330230008	M8X30		1	
36	74570721	Center Y-axis Bracket	6820354			1	
37	79564804	Hex Soc Cap Screw	P330230006	M8X20		4	

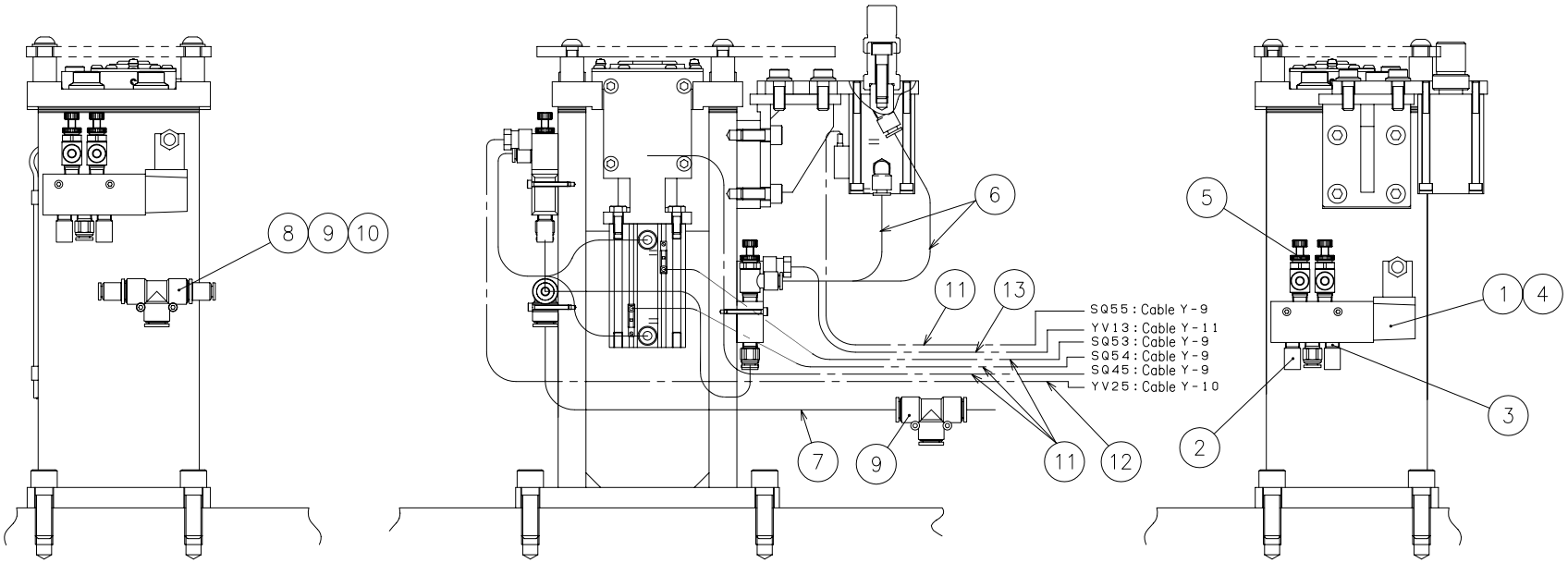

6877645
6877646
(6829190A)

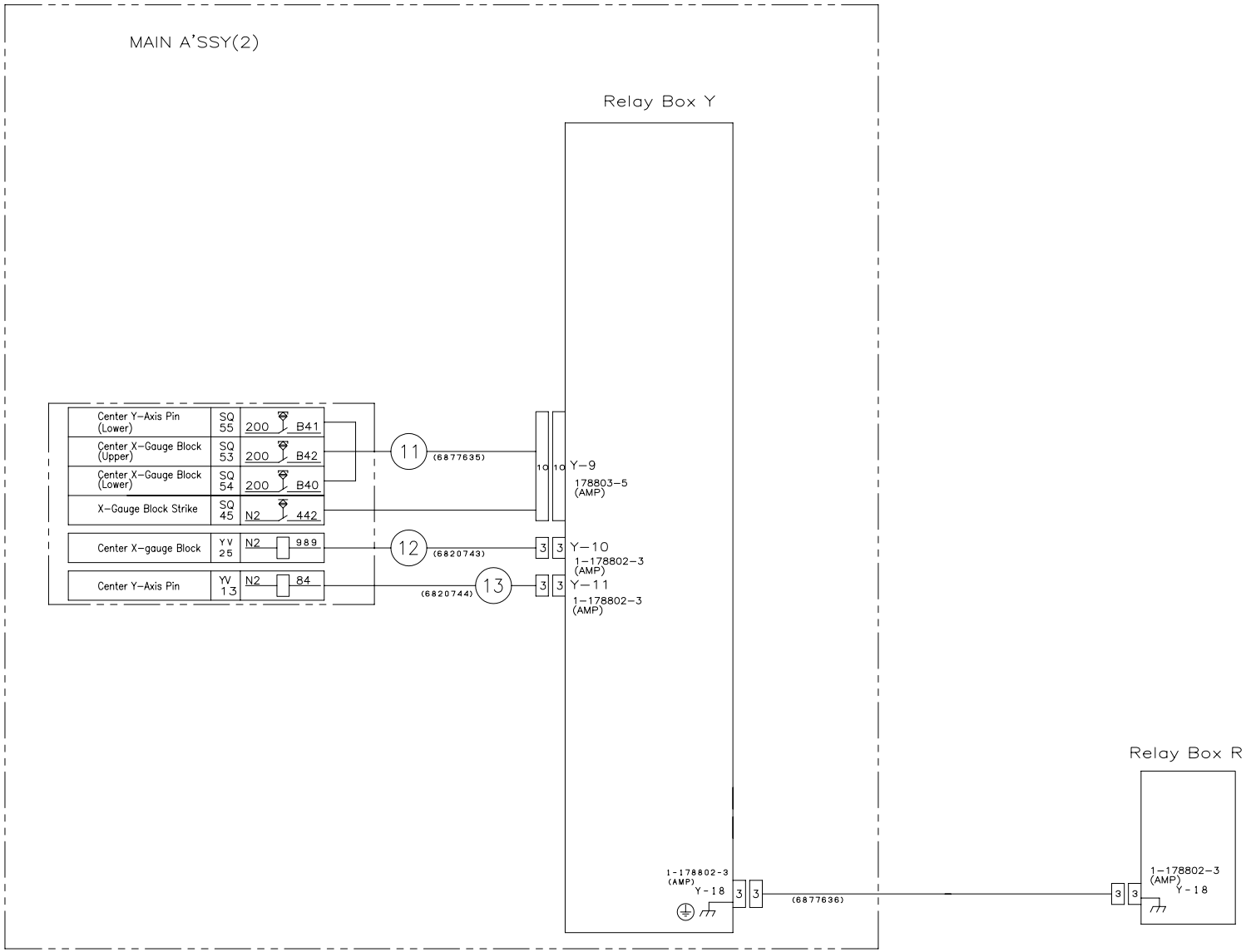

6877645
6877646
(6829190A)

Index	Code	Parts Name	Drawing No.	Type	Maker	Q'ty	Note
1	74570722	Air Directional Valve	P556002349	VZ5120-5DZC-01	SMC	1	
2	74722868	Silencer	P557032003	AN103-01	SMC	4	
3	74351914	Instant Fitting	P586534002	EC6-PT1/8	NITTA MOORE	2	
4	74384797	Hex Soc Cap Screw	P330200034	M3X45		2	
5	74567039	Air Flow Control Valve	P555007004	ESC6-PT1/8-I	NITTA MOORE	2	
6	71371426	Plastic Hose	P230222134	N2-4-6X4(Black)-1M	NITTA MOORE	2	
7	71371423	Plastic Hose	P230242076	N2-4-10X8(Black)-1.5M	NITTA MOORE	1	
8	74578871	Instant Fitting	P586628089	GWFY6-8	CKD	1	
9	74578872	Instant Fitting	P586538103	GWS10-8-M	CKD	1	
10	31180180	Hex Soc Cap Screw	P330200009	M3X20		1	
11	74419179	Cable Y-9	6877635			1	
12	74570724	Cable Y-10	6820743			1	
13	74570725	Cable Y-11	6820744			1	
14	74419180	Air Directional Valve	P556002455	VZ5120-5DZC-C6	SMC	1	List Only
15	36368119	Washer	P336000002	3(Small Round)		2	List Only

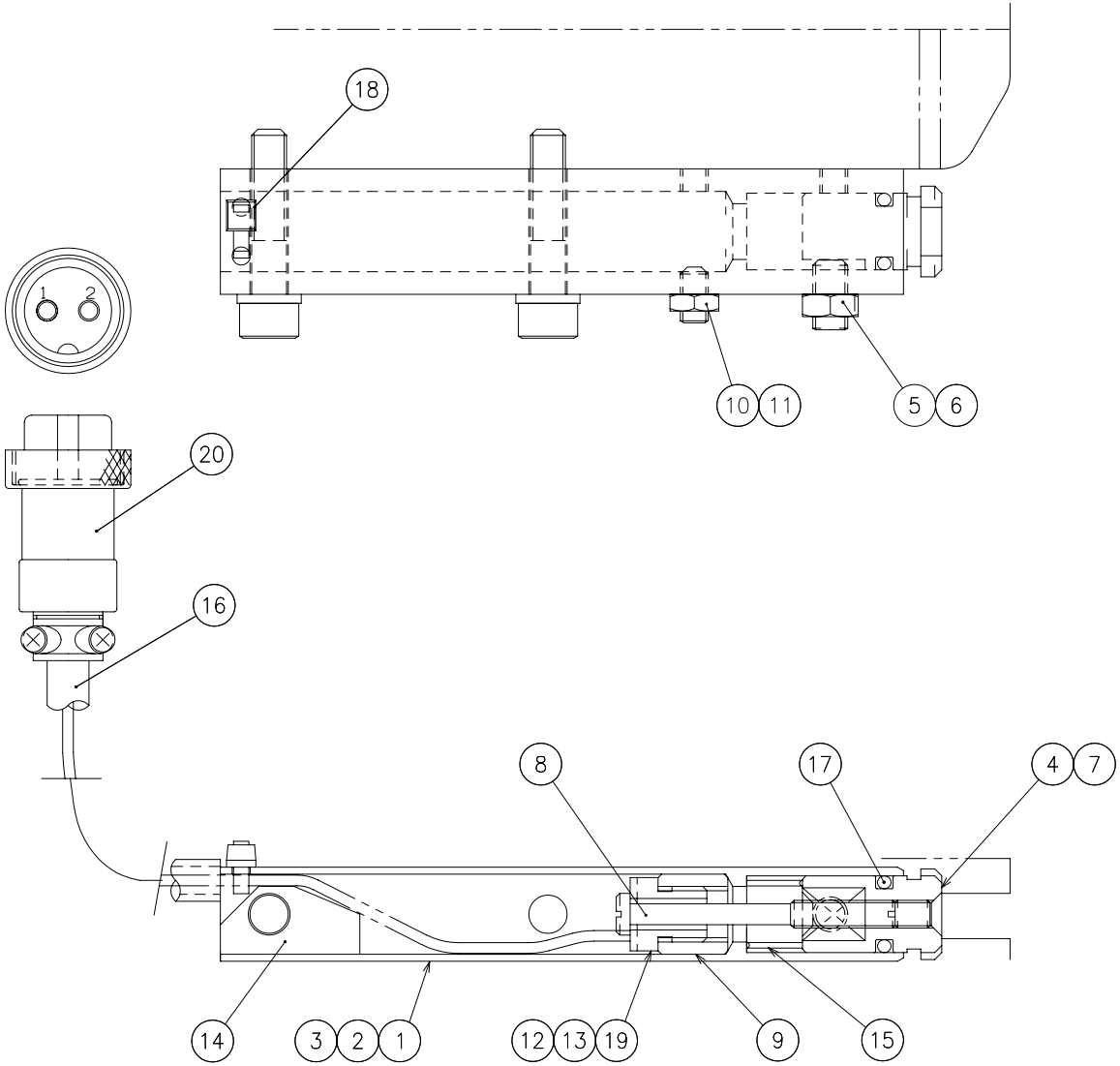

7420920E

Index	Code	Parts Name	Drawing No.	Type	Maker	Q'ty	Note
1	74573823	Sensor Holder	1542194 B			1	
2	79316111	Hex Soc Cap Screw	P330210010	M5X25		2	
3	79567114	Spring Washer	P336050004	5		2	
4	74569468	Stopper	7420921 A			1	
5	36147503	Socket Set Screw	P330550018	M5X10(Flat Type)		1	
6	78186244	Nut	P332000016	M5(Thin)		1	
7	71102223	Socket Set Screw	P330550008	M4X5(Flat Type)		1	
8	74569469	Screw	1542196 A			1	
9	74379829	Insulator	0849943			1	
10	74305502	Socket Set Screw	P330590052	M4X8(Cup-end)		1	
11	74716224	Nut	P332000015	M4(Thin)		1	
12	74573699	Screw	1542197 C			1	
13	74569471	Vinyl Cord (P.V.C)	P342208004	ME15EU13-1.5M	JUNKOSHA	1	
14	74569262	Packing	7420922			1	
15	74573867	Spring	7831012		FUTABA HATSUJO	1	
16	31182101	Plastic Hose	P230218010	UH30-06(Black)-1.1M	JUNKOSHA	1	
17	74569264	O Ring	P590000249	4D-P7		1	
18	74569473	Cable Band	P381058104	SKB-85MM	KITAGAWA	1	
19	74569474	Tube	P230348005	A-1.5X0.2(Black)	SEI	1	

Unit No. 258

US Line (CR)-C(20) From Serial No.36102001 and after

Index	Code	Parts Name	Drawing No.	Type	Maker	Q'ty	Note
20	74569254	Metallic Connector	P860038003	PLT-162-P	MISUMI	1	

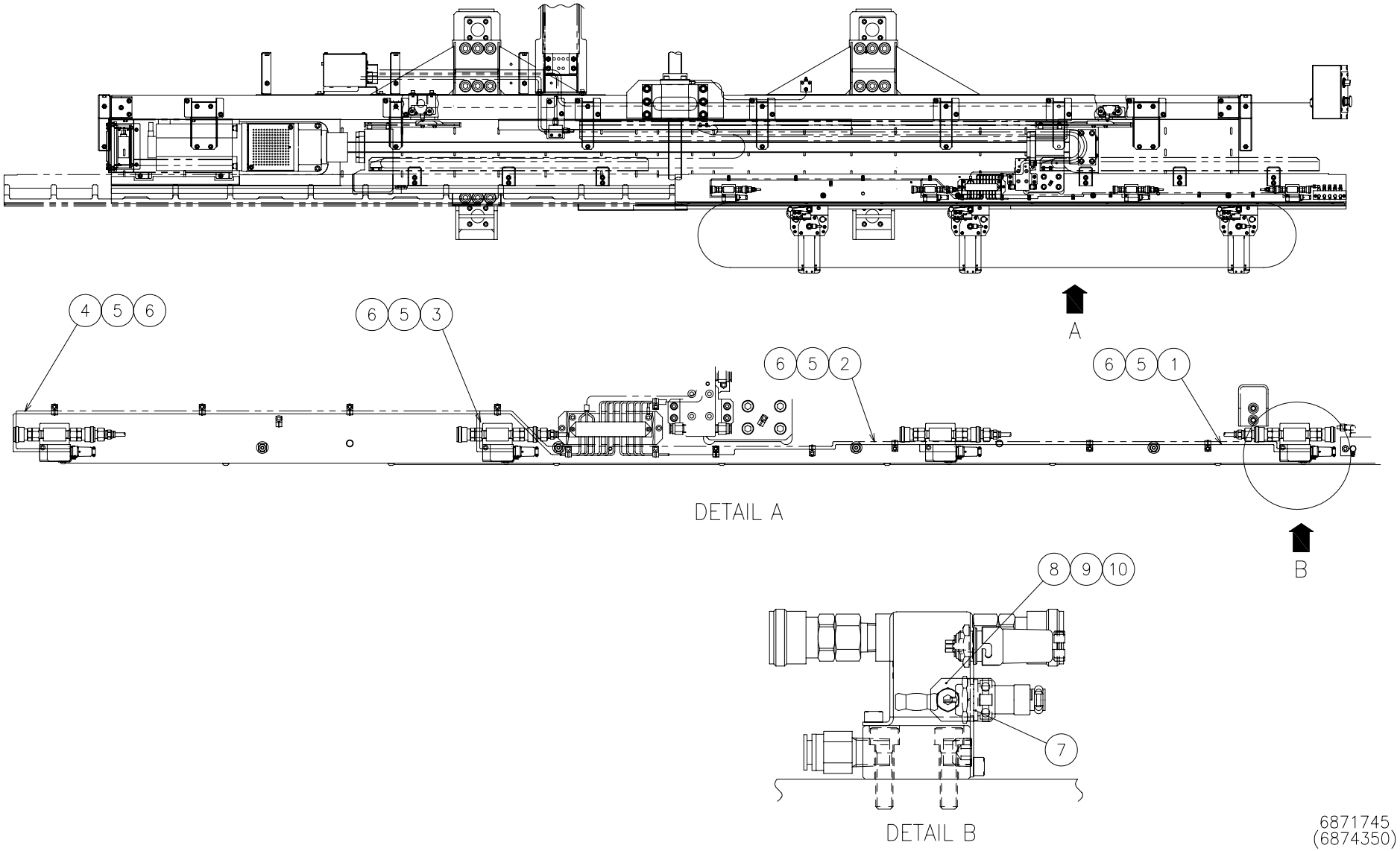
4 5 6
6 5 3
6 5 2
6 5 1
A
B
DETAIL A
8 9 10
7
DETAIL B
6871745
(6874350)

Unit No. 259

US Line (CR)-C(21) From Serial No.36102001 and after

Index	Code	Parts Name	Drawing No.	Type	Maker	Q'ty	Note
1	74575170	Cabtire Cable	P342301945	VCTF0.5X2X800		1	
2	74575154	Cabtire Cable	P342301946	VCTF0.5X2X1400		1	
3	74416444	Cabtire Cable	P342301947	VCTF0.5X2X400		1	
4	74416445	Cabtire Cable	P342301948	VCTF0.5X2X1200		1	
5	75419408	Marker Tube	P869220208	0.5		8	
6	74310420	Cable Band	P381058020	CV-175N	SHIBAKEI	10	
7	74164041	Metallic Connector	P860038004	PLT-162-R	MISUMI	4	
8	74569256	Loose Stopper Plate	7420749			4	
9	36501002	Hex Soc Cap Screw	P330210002	M5X8		4	
10	74307821	Cable Band	P381058012	CV-150N	SHIBAKEI	4	

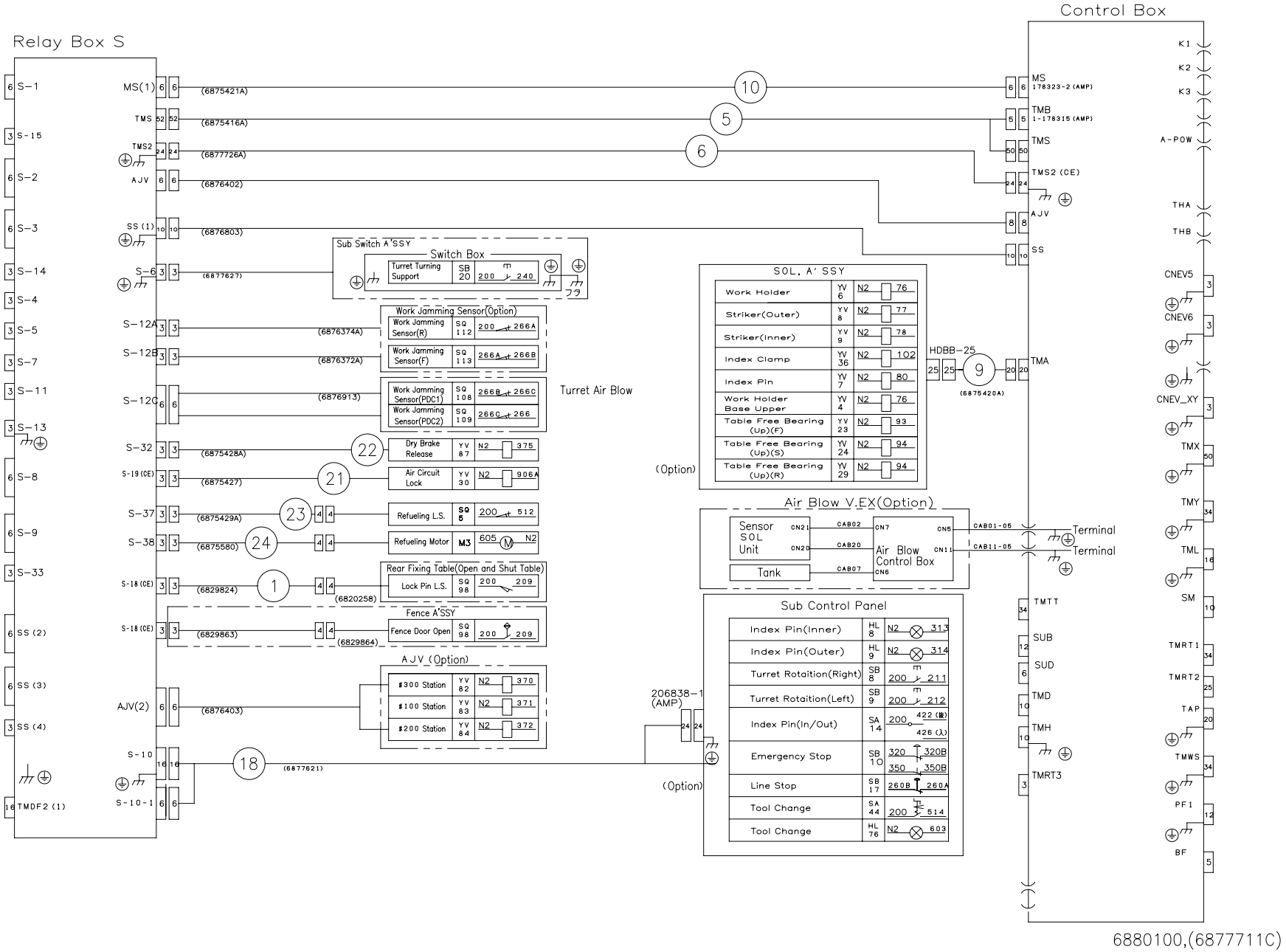
Relay Box S
Control Box
MS(1)
TMS
TMS2
AJV
SS (1)
S-6
S-12A
S-12B
S-12C
S-32
S-19 (CE)
S-37
S-38
S-18 (CE)
AJV(2)
S-10
S-10-1
S-1
S-15
S-2
S-3
S-14
S-4
S-5
S-7
S-11
S-13
S-8
S-9
S-33
SS (2)
SS (3)
SS (4)
TMDF2 (1)
(6875421A)
(6875416A)
(6877726A)
(6876402)
(6876803)
(6877627)
(6876374A)
(6876372A)
(6876913)
(6875428A)
(6875427)
(6875429A)
(6875580)
(6829824)
(6829863)
(6829864)
(6876403)
(6877621)
(6820258)
Sub Switch A'SSY
Switch Box
Turret Turning Support
Work Jamming Sensor(Option)
Work Jamming Sensor(R)
Work Jamming Sensor(F)
Work Jamming Sensor(PDC1)
Work Jamming Sensor(PDC2)
Turret Air Blow
Dry Brake Release
Air Circuit Lock
Refueling L.S.
Refueling Motor
Rear Fixing Table(Open and Shut Table)
Lock Pin L.S.
Fence A'SSY
Fence Door Open
AJV (Option)
#300 Station
#100 Station
#200 Station
SOL. A' SSY
Work Holder
Striker(Outer)
Striker(Inner)
Index Clamp
Index Pin
Work Holder Base Upper
Table Free Bearing (Up)(F)
Table Free Bearing (Up)(S)
Table Free Bearing (Up)(R)
(Option)
HDBB-25
(6875420A)
Air Blow V.EX(Option)
Sensor SOL Unit
Tank
Air Blow Control Box
CAB02
CAB20
CAB07
CAB01-05
CAB11-05
Terminal
Terminal
206838-1 (AMP)
(Option)
Sub Control Panel
Index Pin(Inner)
Index Pin(Outer)
Turret Rotaition(Right)
Turret Rotaition(Left)
Index Pin(In/Out)
Emergency Stop
Line Stop
Tool Change
Tool Change
MS 178323-2 (AMP)
TMB 1-178315 (AMP)
TMS
TMS2 (CE)
AJV
SS
TMA
TMTT
SUB
SUD
TMD
TMH
TMRT3
K1
K2
K3
A-POW
THA
THB
CNEV5
CNEV6
CNEV_XY
TMX
TMY
TML
SM
TMRT1
TMRT2
TAP
TMWS
PF1
BF
6880100,(6877711C)

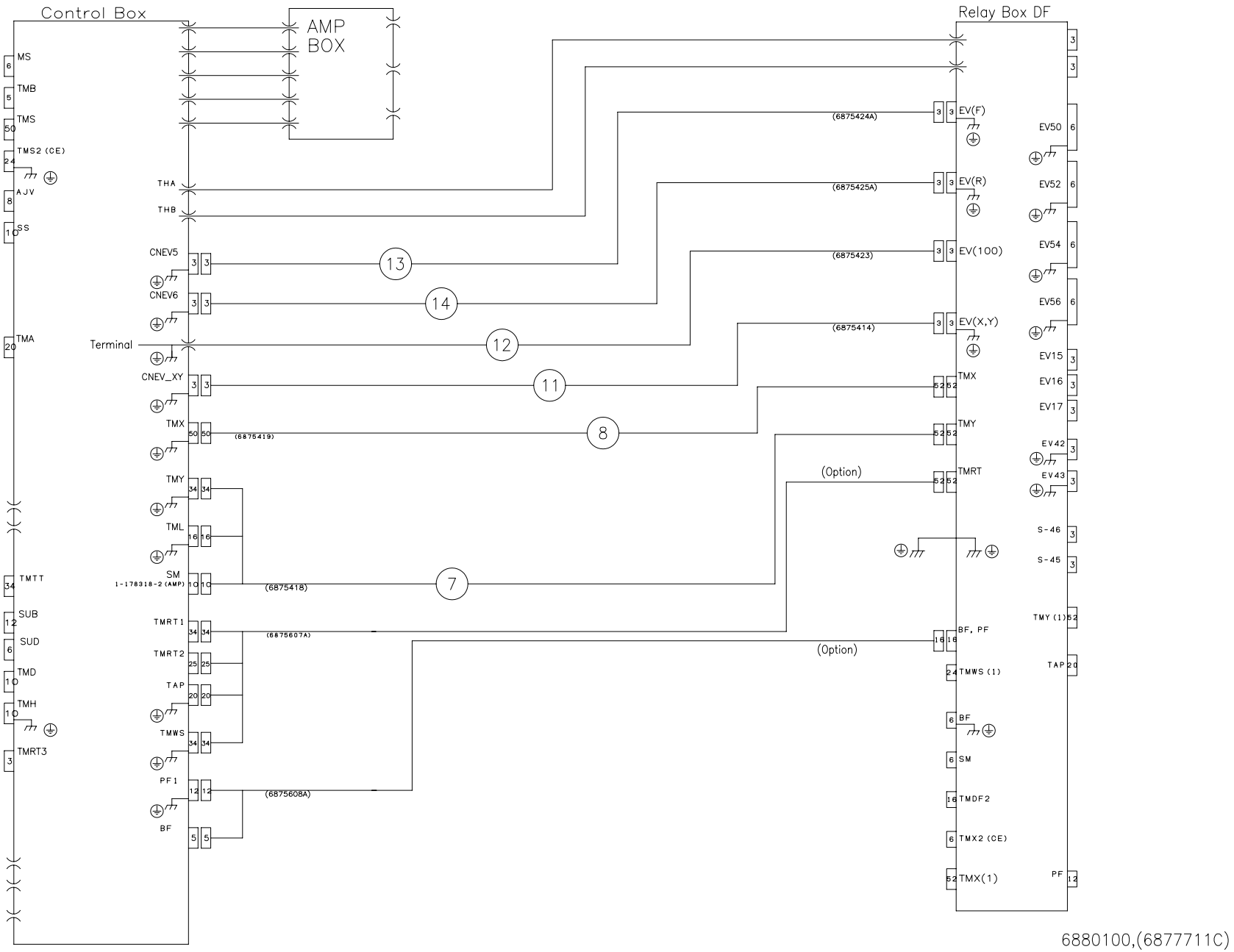
Control Box
AMP BOX
Relay Box DF
MS
TMB
TMS
TMS2 (CE)
AJV
SS
TMA
TMTT
SUB
SUD
TMD
TMH
TMRT3
THA
THB
CNEV5
CNEV6
Terminal
CNEV_XY
TMX
TMY
TML
SM
1-178318-2(AMP)
TMRT1
TMRT2
TAP
TMWS
PF1
BF
(6875424A)
(6875425A)
(6875423)
(6875414)
(6875419)
(6875418)
(6875607A)
(6875608A)
(Option)
(Option)
EV(F)
EV(R)
EV(100)
EV(X,Y)
TMX
TMY
TMRT
BF, PF
TMWS(1)
BF
SM
TMDF2
TMX2 (CE)
TMX(1)
EV50
EV52
EV54
EV56
EV15
EV16
EV17
EV42
EV43
S-46
S-45
TMY(1)
TAP
PF
6880100,(6877711C)

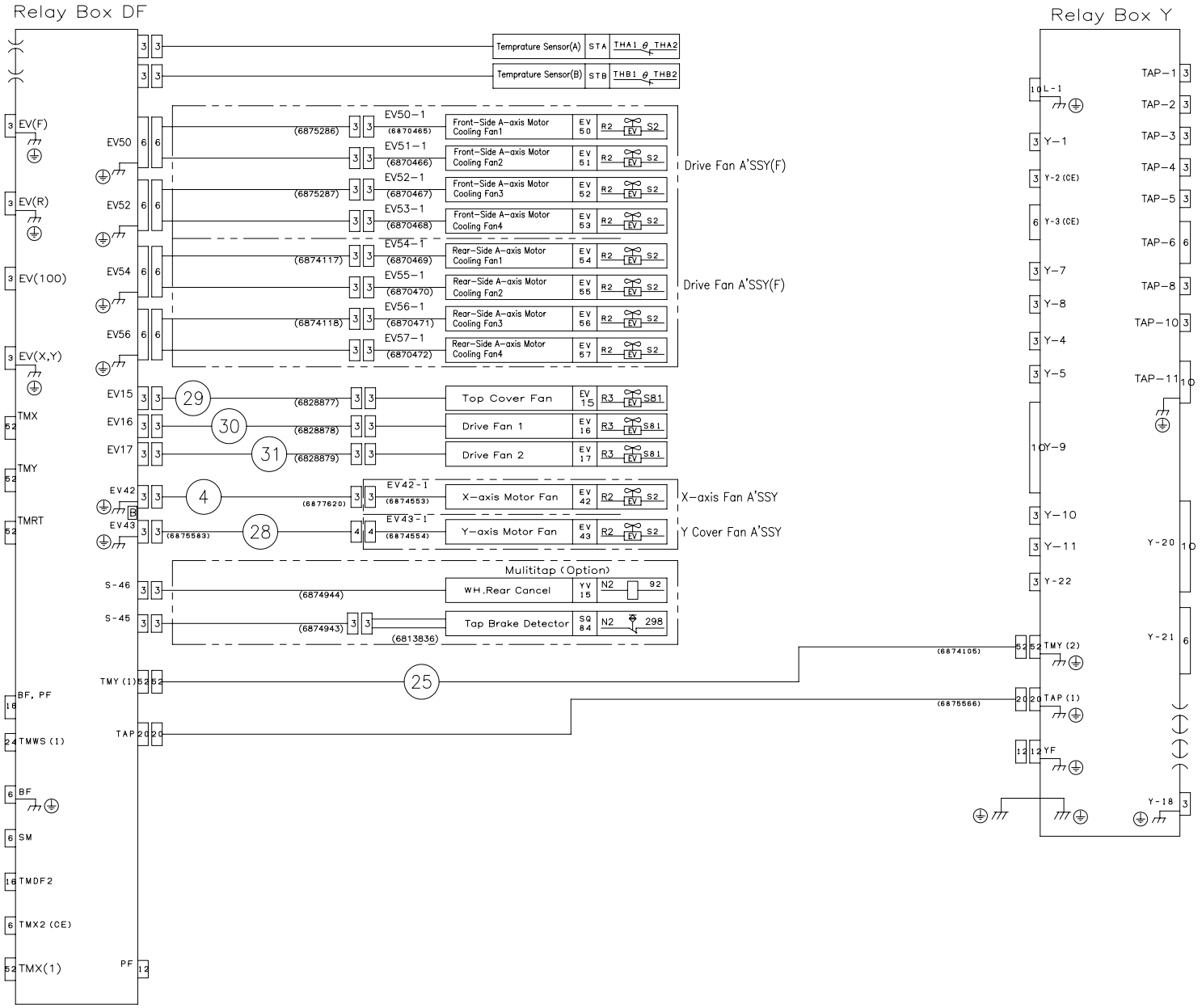
Relay Box DF
Relay Box Y
Temprature Sensor(A)
Temprature Sensor(B)
Front-Side A-axis Motor Cooling Fan1
Front-Side A-axis Motor Cooling Fan2
Front-Side A-axis Motor Cooling Fan3
Front-Side A-axis Motor Cooling Fan4
Rear-Side A-axis Motor Cooling Fan1
Rear-Side A-axis Motor Cooling Fan2
Rear-Side A-axis Motor Cooling Fan3
Rear-Side A-axis Motor Cooling Fan4
Drive Fan A'SSY(F)
Top Cover Fan
Drive Fan 1
Drive Fan 2
X-axis Motor Fan
Y-axis Motor Fan
X-axis Fan A'SSY
Y Cover Fan A'SSY
Mulititap (Option)
WH.Rear Cancel
Tap Brake Detector
EV(F)
EV(R)
EV(100)
EV(X,Y)
TMX
TMY
TMRT
BF, PF
TMWS (1)
BF
SM
TMDF2
TMX2 (CE)
TMX(1)
TMY (1)
TAP
S-46
S-45
TAP-1
TAP-2
TAP-3
TAP-4
TAP-5
TAP-6
TAP-8
TAP-10
TAP-11
Y-20
Y-21
Y-18
TMY (2)
TAP (1)
YF
6880100,(6877711C)

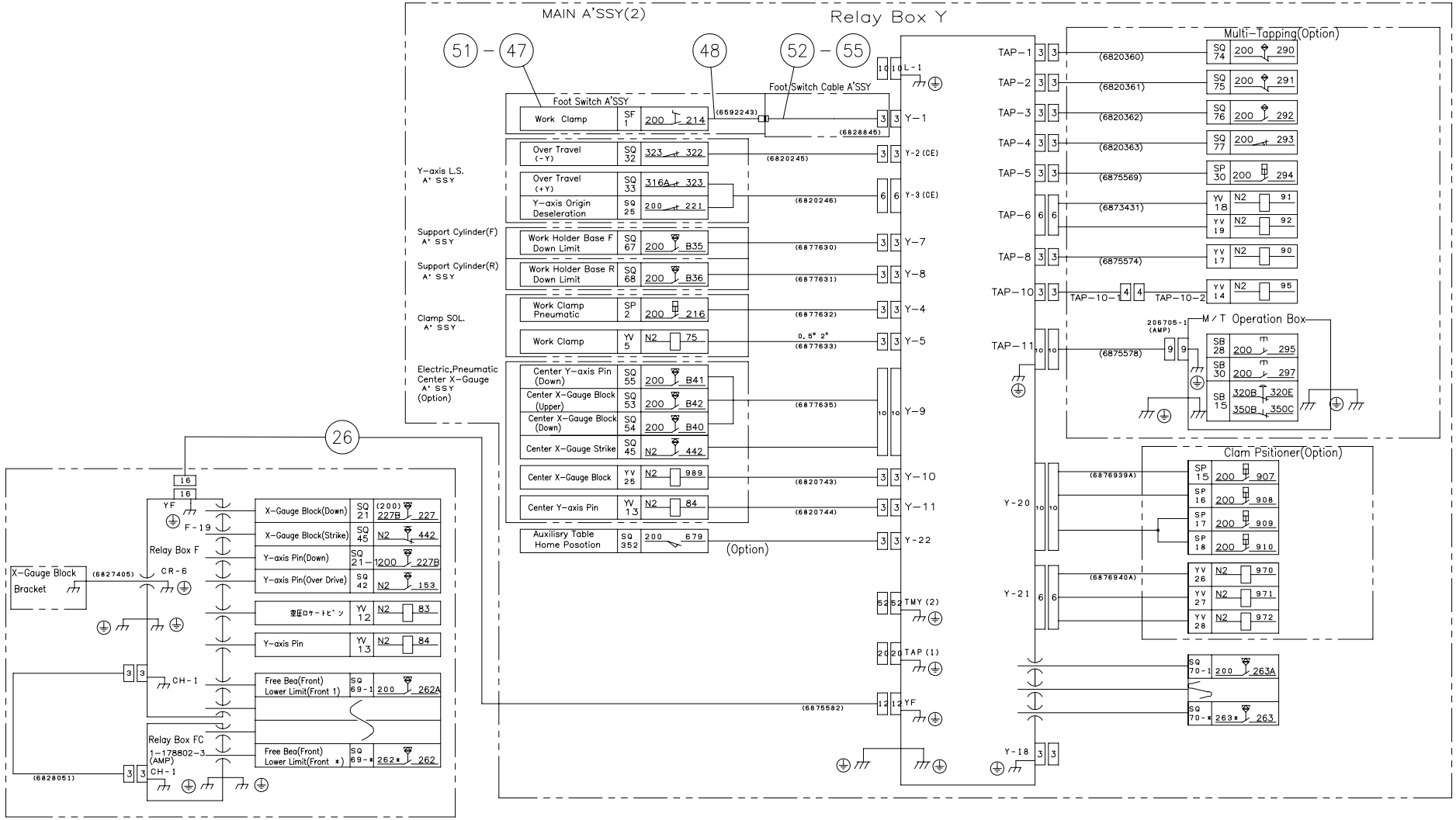

6880100,(6877711C)

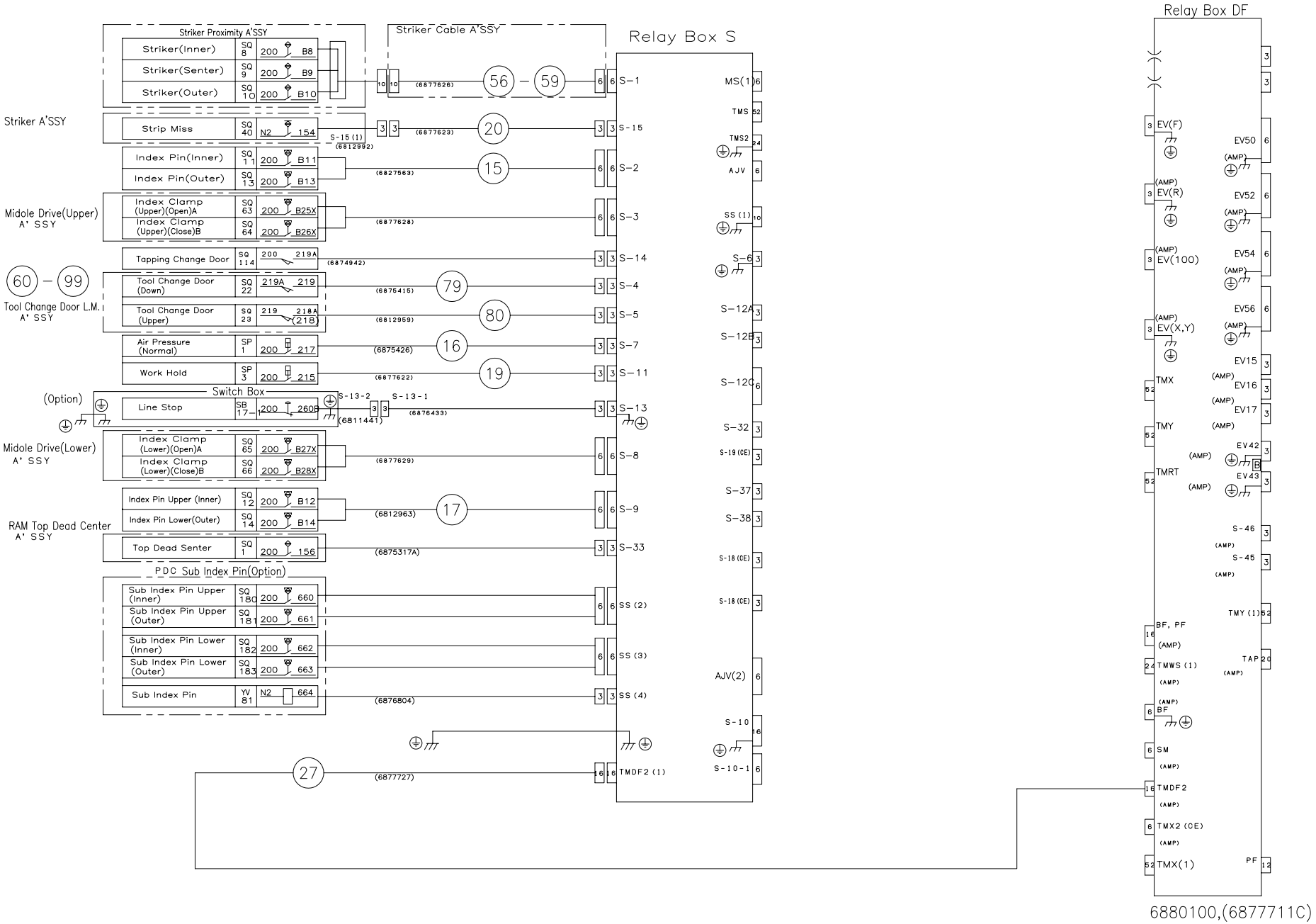
Striker Proximity A'SSY
Striker(Inner)
Striker(Senter)
Striker(Outer)
Striker A'SSY
Strip Miss
Index Pin(Inner)
Index Pin(Outer)
Midole Drive(Upper) A' SSY
Index Clamp (Upper)(Open)A
Index Clamp (Upper)(Close)B
Tapping Change Door
60 – 99
Tool Change Door L.M. A' SSY
Tool Change Door (Down)
Tool Change Door (Upper)
Air Pressure (Normal)
Work Hold
(Option)
Switch Box
Line Stop
Midole Drive(Lower) A' SSY
Index Clamp (Lower)(Open)A
Index Clamp (Lower)(Close)B
RAM Top Dead Center A' SSY
Index Pin Upper (Inner)
Index Pin Lower(Outer)
Top Dead Senter
PDC Sub Index Pin(Option)
Sub Index Pin Upper (Inner)
Sub Index Pin Upper (Outer)
Sub Index Pin Lower (Inner)
Sub Index Pin Lower (Outer)
Sub Index Pin
Striker Cable A'SSY
56 – 59
Relay Box S
Relay Box DF
6880100,(6877711C)

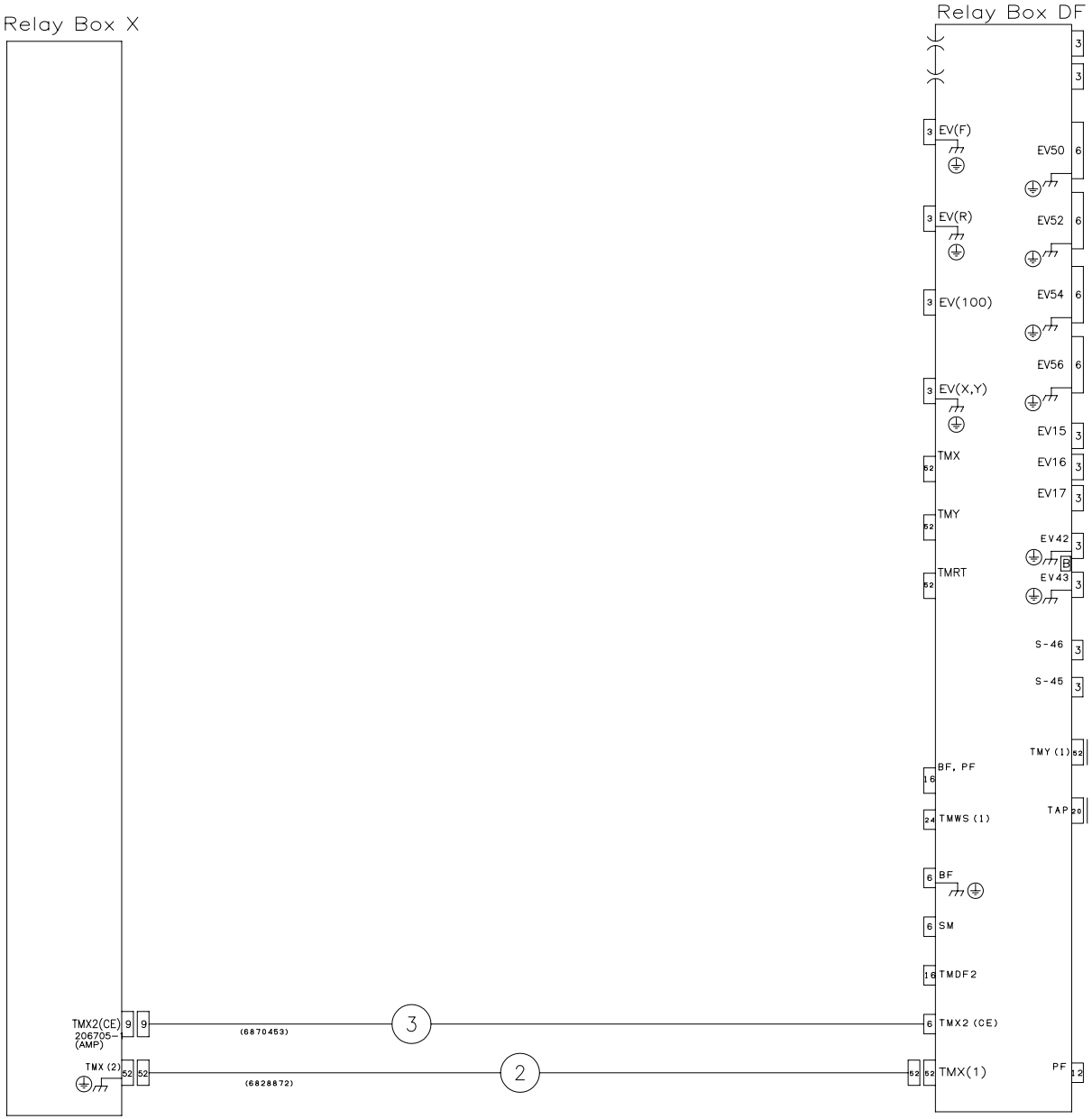

6880100,(6877711C)

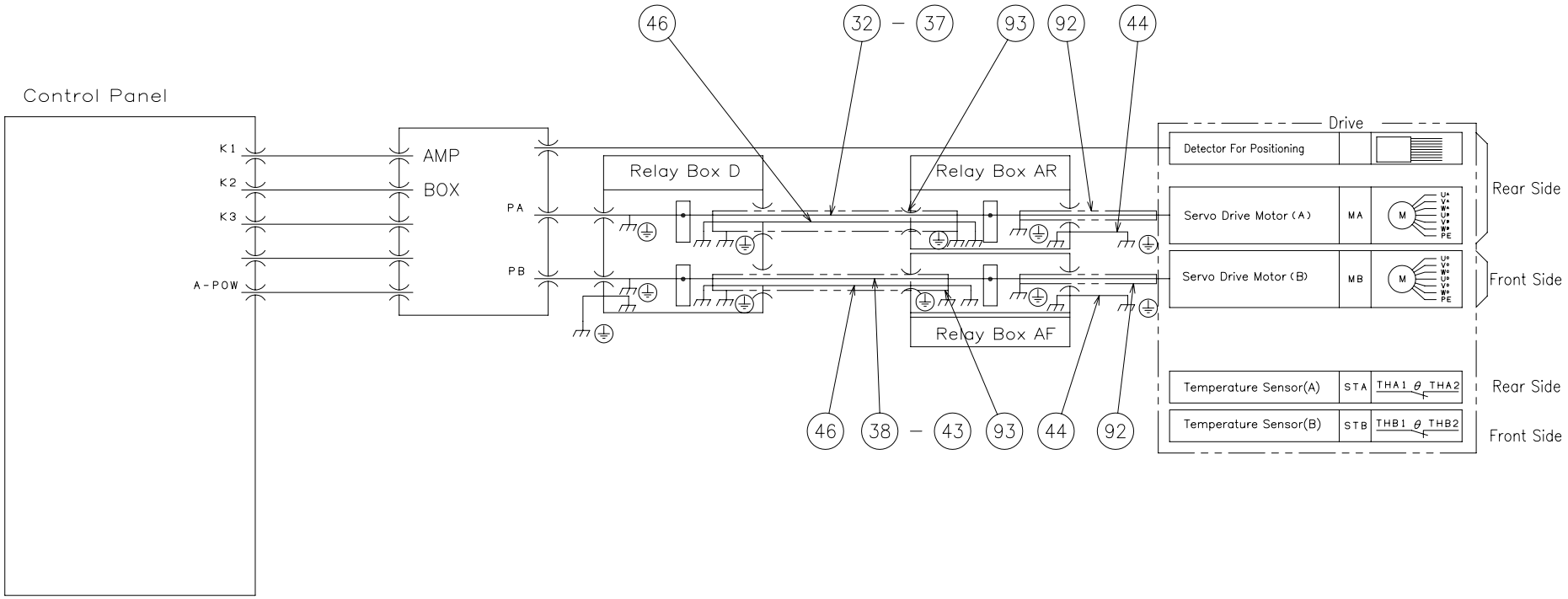

6880100,(6877711C)

Index	Code	Parts Name	Drawing No.	Type	Maker	Q'ty	Note
1	74418431	Cable S-18 (CE)	6829824			1	
2	74415572	Cable TMX(1)	6828872			1	
3	74415551	Cable TMX2 (CE)	6870453 A			1	
4	74419127	Cable EV42	6877620			1	
5	74419489	Cable TMS	6876130			1	
6	74419490	Cable TMS2(CE)	6880102			1	
7	74419491	Cable TMY	6876132 A			1	
8	74419492	Cable TMX	6876133			1	
9	74419493	Cable TMA	6876134			1	
10	74419494	Cable MS	6876135			1	
11	74419495	Cable CNEV(X,Y)	6876136			1	
12	74419496	Cable EV(100)	6876137			1	
13	74419497	Cable EV(F)	6876138			1	
14	74419498	Cable EV(R)	6876139			1	
15	74415560	Cable S-2	6827563			1	
16	74418443	Cable S-7	6875426			1	
17	74569986	Cable S-9	6812963			1	
18	74419128	Cable S-10	6877621			1	
19	74419129	Cable S-11	6877622			1	

Index	Code	Parts Name	Drawing No.	Type	Maker	Q'ty	Note
20	74419130	Cable S-15	6877623			1	
21	74418444	Cable S-19 (CE)	6875427			1	
22	74419131	Cable S-32	6875428 A			1	
23	74419132	Cable S-37	6875429 A			1	
24	74418447	Cable S-38	6875580			1	
25	74418448	Cable TMY(1)	6874105			1	
26	74418449	Cable YF	6875582			1	
27	74418450	Cable TMDF2(CE)	6877727			1	
28	74418451	Cable EV43	6875583			1	
29	74419499	Cable EV15	6875747			1	
30	74419501	Cable EV16	6875748			1	
31	74419502	Cable EV17	6875749			1	
32	74418452	A-axis Motor Cable (UA)	6878051			1	
33	74418453	A-axis Motor Cable (VA)	6878052			1	
34	74418454	A-axis Motor Cable (WA)	6878053			1	
35	74418455	A-axis Motor Cable (UB)	6878059			1	
36	74418456	A-axis Motor Cable (VB)	6878062			1	
37	74418457	A-axis Motor Cable (WB)	6878063			1	
38	74418458	A-axis Motor Cable (UC)	6878064			1	

Index	Code	Parts Name	Drawing No.	Type	Maker	Q'ty	Note
39	74418459	A-axis Motor Cable (VC)	6878065			1	
40	74418460	A-axis Motor Cable (WC)	6878066			1	
41	74418461	A-axis Motor Cable (UD)	6878067			1	
42	74418462	A-axis Motor Cable (VD)	6878068			1	
43	74418463	A-axis Motor Cable (WD)	6878069			1	
44	74418464	Ground Lead Cable (A)	6878056			2	
45	74418465	Ground Lead Cable (B)	6878057			2	List Only
46	74418466	Ground Cable (C)	6878058			2	
47	74383889	Foot Switch	P826108001	XPE-M510	SCHNEIDER	1	
48	74383888	Foot Switch Cable	6592243 A			1	
49	74383748	Accessory For Limit Switch	P828108004	DE9-PL116044	SCHNEIDER	1	
50	74383746	Washer	P336238037	DE9-PL116043	SCHNEIDER	1	
51	74380424	Metallic Connector	P860002002	NCS-253-PM	NANAHOSHI Electric	1	
52	74415963	Cable Y-1	6828845			1	
53	74386689	Flat Head Bolt	P334520041	M3X6		3	
54	74307030	Connector Setting Plate	6018282			1	
55	79564305	Hex Soc Cap Screw	P330220006	M6X15		2	
56	74419133	Cable S-1	6877626			1	
57	74570051	Pan Head Screw with Washer	P334200109	M3X10(Chromate P-4)		4	

Index	Code	Parts Name	Drawing No.	Type	Maker	Q'ty	Note
58	74578833	Connector Bracket	6532844 A			1	
59	79565423	Hex Soc Cap Screw	P330230004	M8X15		2	
60	74418467	Key Bracket (Upper)	6873074			1	
61	79565201	Hex Soc Cap Screw	P330220004	M6X12		2	
62	74417120	Safety Switch	P826163006	LJS-PA792	YAMATAKE	1	
63	79570917	Hex Soc Cap Screw	P330200024	M4X35		2	
64	74417122	Accessory (for Safety Switch)	P826173001	PA4-M2B	YAMATAKE	1	
65	74418468	LS Bracket (Upper)	6875592			1	
66	74731367	Flange Socket Bolt	P330468026	M6X12	NISSAN NEJI	2	
67	74417121	Accessory (for Safety Switch)	P826173002	LJS-Z13	YAMATAKE	1	
68	76116106	Hex Soc Cap Screw	P330200025	M4X40		2	
69	79573507	Spring Washer	P336050003	4		2	
70	71513636	Washer	P336000092	4(Regular Round)		2	
71	74300392	LS Bracket	6503888			1	
72	74731367	Flange Socket Bolt	P330468026	M6X12	NISSAN NEJI	2	
73	74300824	Limit Switch	P828008001	AT0-11-1-ZB	MURA Electric	1	
74	74569526	Accessory For Limit Switch	P828108007	V-M20	MURA Electric	1	
75	79570917	Hex Soc Cap Screw	P330200024	M4X35		2	
76	74300393	Key Bracket	6503887			1	

Index	Code	Parts Name	Drawing No.	Type	Maker	Q'ty	Note
77	74731367	Flange Socket Bolt	P330468026	M6X12	NISSAN NEJI	2	
78	76400229	Flat Head Bolt	P334520003	M4X12		2	
79	74418469	Cable S-4	6875415			1	
80	74569982	Cable S-5	6812959 A			1	
81	74310948	Cable Bracket	6502982 A			1	
82	75428708	Flange Socket Bolt	P330468015	M6X10	NISSAN NEJI	2	
83	86213001	Hex Soc Cap Screw	P330200003	M3X10		4	
84	74307616	Nut	P332000001	M3		4	
85	79565423	Hex Soc Cap Screw	P330230004	M8X15		6	
86	74386505	Accessory For Connector	P862182002	900128-2	AMP	2	
87	74568662	Cable Band	P381058102	PLT2S	KITAGAWA	30	
88	74563689	Saddle For Conduct	P381017105	PZ0106(D6.2)	DAIWA DENGYO	11	
89	31183033	Hex Soc Cap Screw	P330220003	M6X10		11	
90	74568661	Cable Band	P381058101	TM3S25	KITAGAWA	1	
91	31183033	Hex Soc Cap Screw	P330220003	M6X10		1	
92	74418470	Shield Tube (A)	6878054			2	
93	74418471	Shield Tube (B)	6878055			2	
94	74570022	Cable Support	6813067			1	
95	74570023	Cable Support Bracket	6813068			1	

Index	Code	Parts Name	Drawing No.	Type	Maker	Q'ty	Note
96	79566121	Hex Soc Cap Screw	P330230007	M8X25		4	
97	74417164	Antivibration Rubber	7830994	HM-25	SHINWA	6	
98	79565419	Washer	P336000005	6(Regular Round)		6	
99	31183033	Hex Soc Cap Screw	P330220003	M6X10		6	

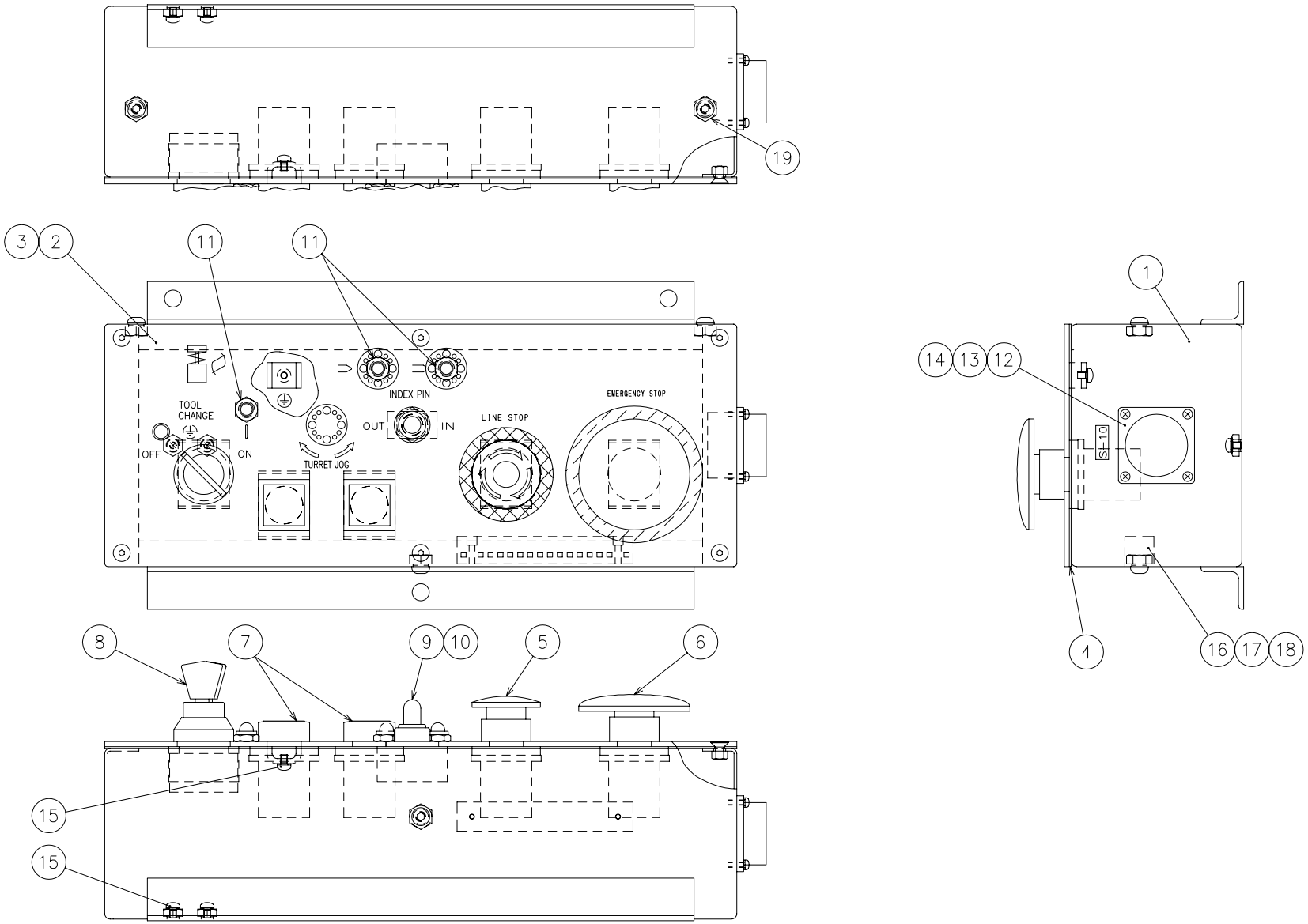
19
3
2
11
11
TOOL CHANGE
OFF
ON
TURRET JOG
INDEX PIN
OUT
IN
LINE STOP
EMERGENCY STOP
1
14
13
12
SI-10
4
16
17
18
8
7
9
10
5
6
15
15

6870520

Index	Code	Parts Name	Drawing No.	Type	Maker	Q'ty	Note
1	74570045	Sub Control Box (CE)	6820270			1	
2	74416460	Legend Plate (Sub Control)	6870528			1	for EU,EXP
2	74419503	Legend Plate (Sub Control)	6817591			1	Chinese
3	79321267	Flat Head Bolt	P334520006	M5X10		6	
4	74570047	Packing (CE Sub-Operation Box)	6820272			1	
5	74568712	Push Switch	P821124128	AR30V3R-01BZ235	FUJI Electric	1	
6	74570048	Push Switch	P821124129	AR30V1R-02R-Z037	FUJI Electric	1	
7	74570049	Push Switch	P821084087	AR22F0S-10W-Z037	FUJI Electric	2	
8	74415122	Key Select Switch	P820014100	AR30JR-2D01A	FUJI Electric	1	
9	74568080	Toggle Switch	7833079	SDT-110G-02SCAU	SHINDEN	1	
10	75419224	Accessory For Toggle Switch	P823088001	WD1911	MATSUSHITA	1	
11	74381663	Indicator Apparatus	P843018002	BD-1402G	OKAYA	3	
12	74382195	Plastic R Connector	P862032008	206838-1	AMP	1	24P
13	75419126	Plug Type Terminal	P862142012	66103-2	AMP	24	
14	74569454	Pan Head Screw with Washer	P334200145	M3X8(Chromate P-4)		4	
15	74569811	Pan Head Screw with Washer	P334200113	M4X6(Chromate P-4)		3	
16	74569809	Block Terminal	P864008047	MK4/16KRG	WEIDMULLER	1	
17	74386496	Plug Type Terminal	P862148024	H0.75/15	WEIDMULLER	5	
18	79316101	Hex Soc Cap Screw	P330200006	M3X15		2	

Unit No. 261

US Line (CR)-C(23) From Serial No.36102001 and after

Index	Code	Parts Name	Drawing No.	Type	Maker	Q'ty	Note
19	36379029	Button Head Screw	P334500013	M6X10		3	

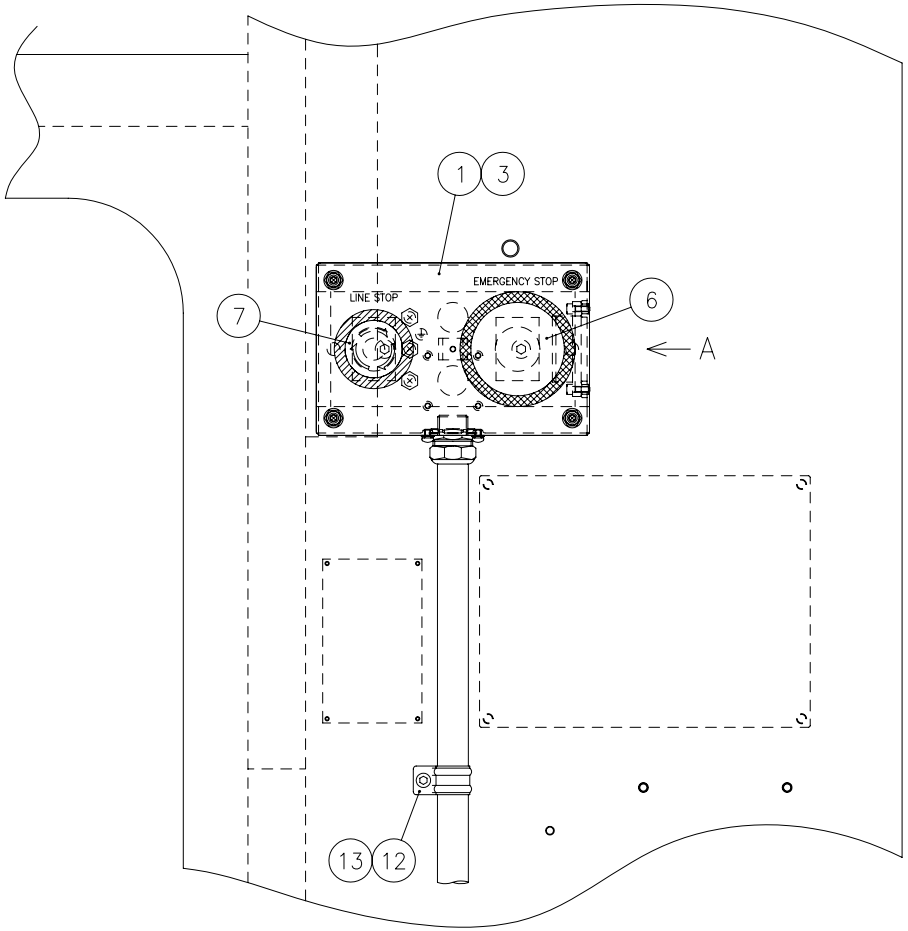

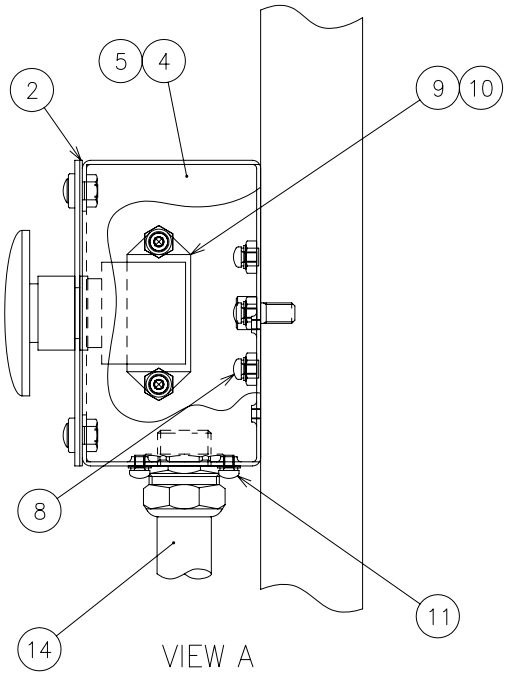

6870527
6880106

Index	Code	Parts Name	Drawing No.	Type	Maker	Q'ty	Note
1	74416469	Legend Plate(SW.Operating)(A)	6824977			1	for EU,EXP
1	74419504	Legend Plate(SW.Operating)(A)	6817592			1	Chinese
2	74416468	Packing	6824981			1	
3	74722794	Knob Bolt	P338048001	Faced Screw -NO.2-M5X10	Tokyo Byora	4	
4	74416474	Switch Operating Box L	6870518			1	
5	79565423	Hex Soc Cap Screw	P330230004	M8X15		2	
6	74570048	Push Switch	P821124129	AR30V1R-02R-Z037	FUJI Electric	1	
7	74568712	Push Switch	P821124128	AR30V3R-01BZ235	FUJI Electric	1	
8	74569811	Pan Head Screw with Washer	P334200113	M4X6(Chromate P-4)		4	(Ground)
9	74386516	Rectangle Connector	P862138054	KS4KRG/D4	WEIDMULLER	1	
10	86611902	Hex Soc Cap Screw	P330200016	M4X12		2	
11	74569811	Pan Head Screw with Washer	P334200113	M4X6(Chromate P-4)		4	
12	74732128	Saddle For Conduct	P381017093	CH-15(D6.2)	DAIWA DENGYO	1	
13	79564305	Hex Soc Cap Screw	P330220006	M6X15		1	
14	74419182	Cable L	6878339			1	
15	74416473	Cable 2 (CE)	6870537			1	List Only

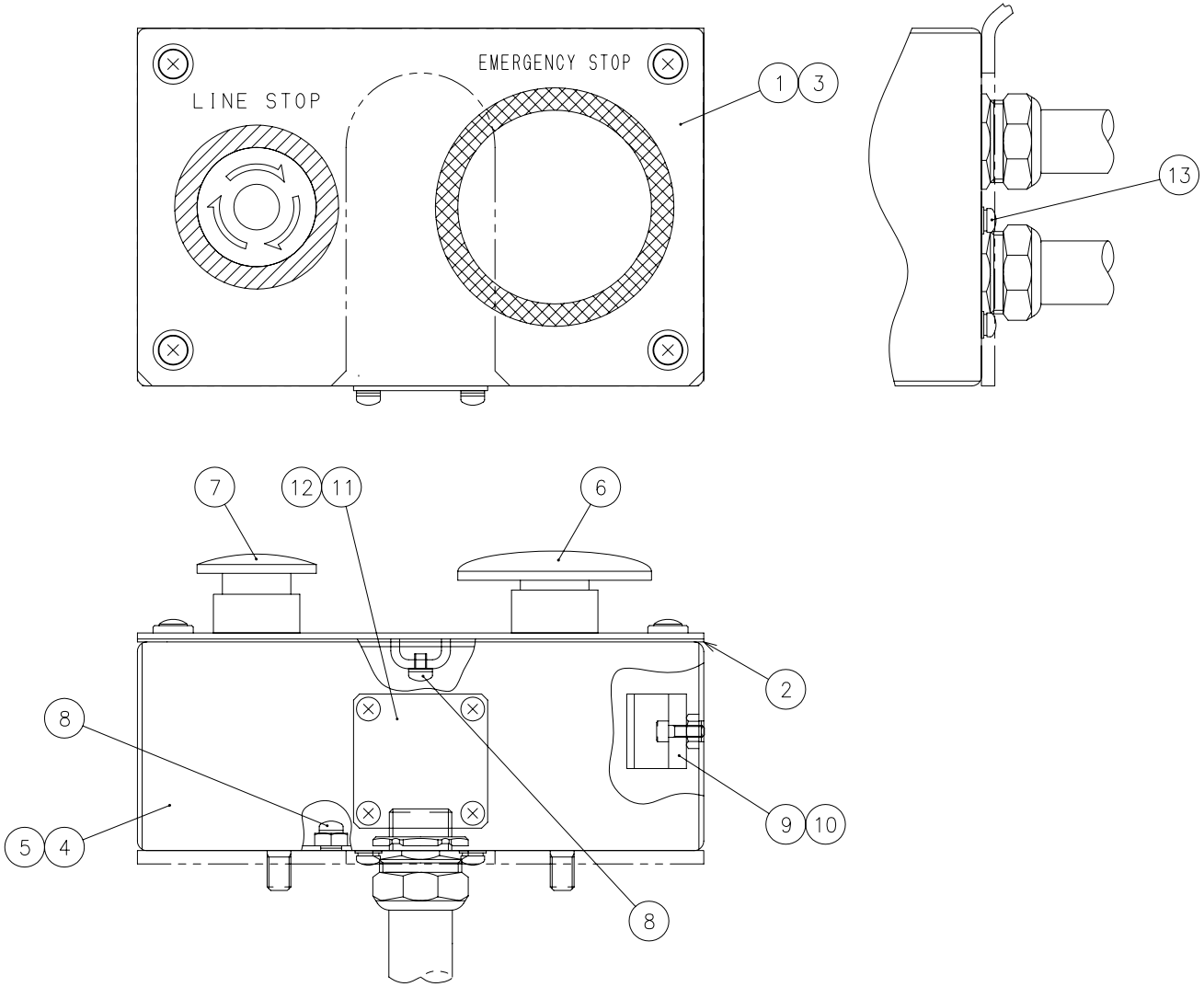

6870534

Unit No. 263

US Line (CR)-C(25) From Serial No.36102001 and after

Index	Code	Parts Name	Drawing No.	Type	Maker	Q'ty	Note
1	74416469	Legend Plate(SW.Operating)(A)	6824977			1	for EU,EXP
1	74419504	Legend Plate(SW.Operating)(A)	6817592			1	Chinese
2	74416468	Packing	6824981			1	
3	74722794	Knob Bolt	P338048001	Faced Screw -NO.2-M5X10	Tokyo Byora	4	
4	74416474	Switch Operating Box L	6870518			1	
5	79565423	Hex Soc Cap Screw	P330230004	M8X15		2	
6	74570048	Push Switch	P821124129	AR30V1R-02R-Z037	FUJI Electric	1	
7	74568712	Push Switch	P821124128	AR30V3R-01BZ235	FUJI Electric	1	
8	74569811	Pan Head Screw with Washer	P334200113	M4X6(Chromate P-4)		4	(Ground)
9	74386516	Rectangle Connector	P862138054	KS4KRG/D4	WEIDMULLER	1	
10	86611902	Hex Soc Cap Screw	P330200016	M4X12		2	
11	74416470	Blind Cover	6813436			1	
12	74570030	Pan Head Screw with Washer	P334200115	M4X10(Chromate P-4)		4	
13	74569811	Pan Head Screw with Washer	P334200113	M4X6(Chromate P-4)		4	

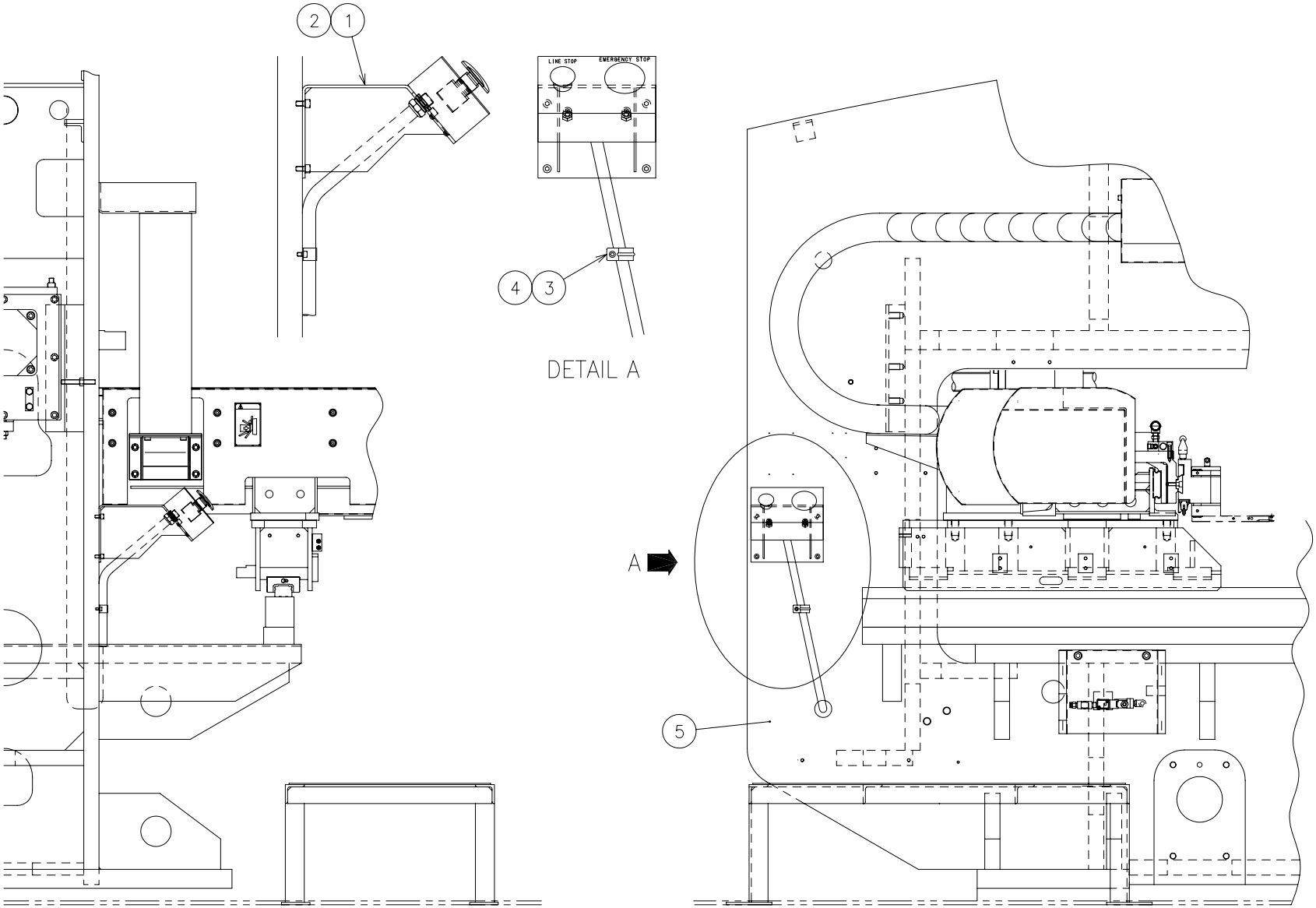

6880105
(6829195A)

Unit No. 264

US Line (CR)-C(26) From Serial No.36102001 and after

Index	Code	Parts Name	Drawing No.	Type	Maker	Q'ty	Note
1	74416471	Control Panel Bracket	6827782 A			1	
2	79565423	Hex Soc Cap Screw	P330230004	M8X15		4	
3	74732128	Saddle For Conduct	P381017093	CH-15(D6.2)	DAIWA DENGYO	1	
4	31183033	Hex Soc Cap Screw	P330220003	M6X10		1	
5	74419505	Frame Add.Works	6880108			1	

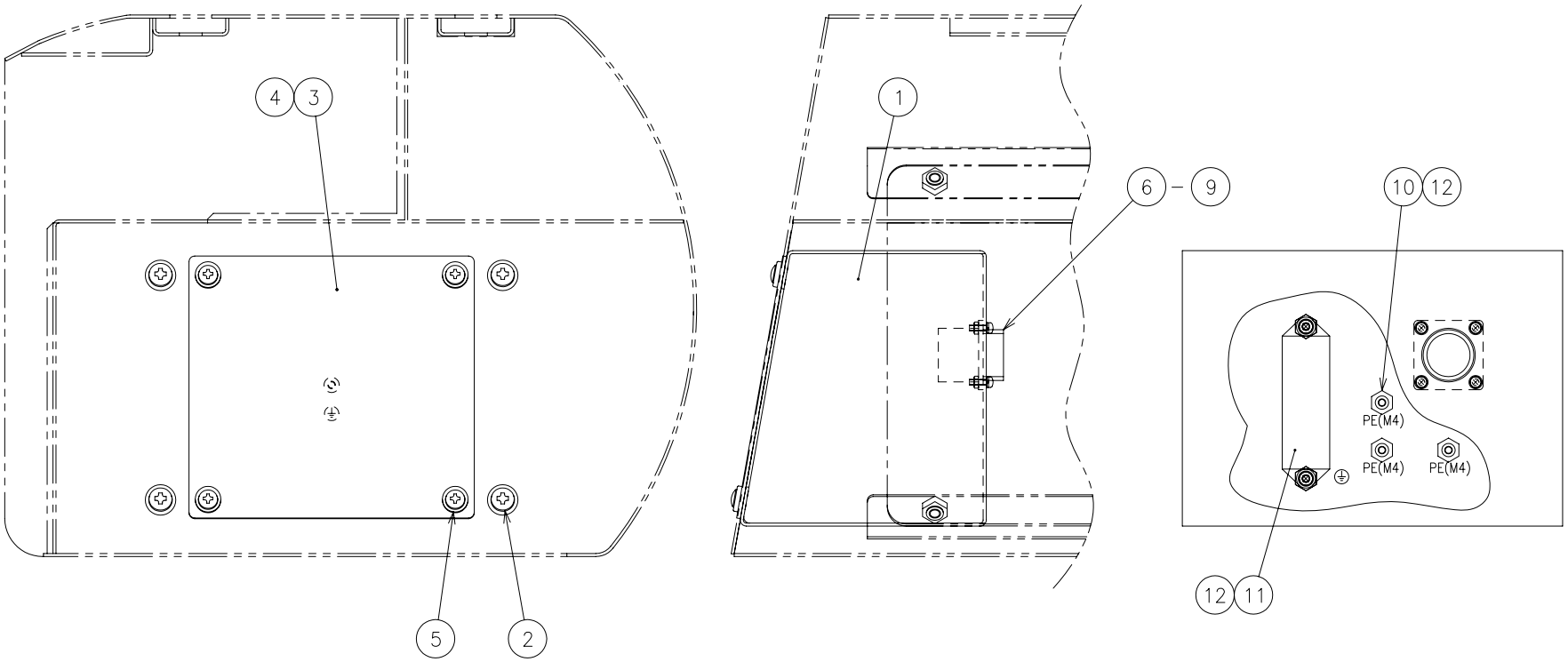

6877387
(6877515)

Unit No. 265

US Line (CR)-C(27) From Serial No.36102001 and after

Index	Code	Parts Name	Drawing No.	Type	Maker	Q'ty	Note
1	74417273	CR Control Box	6874522 A			1	
2	74722795	Knob Bolt	P338048002	Faced Screw -NO.3-M6X15	Tokyo Byora	4	
3	74417274	CR Box Cover	6874527			1	
4	74417275	Packing	6874525			1	
5	74722794	Knob Bolt	P338048001	Faced Screw -NO.2-M5X10	Tokyo Byora	4	
6	74521705	Plastic R Connector	P862032003	206036-1	AMP	1	
7	74384510	Plug Type Terminal	P862142020	66400-1	AMP	9	
8	74570051	Pan Head Screw with Washer	P334200109	M3X10(Chromate P-4)		4	
9	74307616	Nut	P332000001	M3		4	
10	74569811	Pan Head Screw with Washer	P334200113	M4X6(Chromate P-4)		4	
11	74386506	Rectangle Connector	P862138056	KS6KRG/D6	WEIDMULLER	1	
12	86620301	Hex Soc Cap Screw	P330200018	M4X15		2	

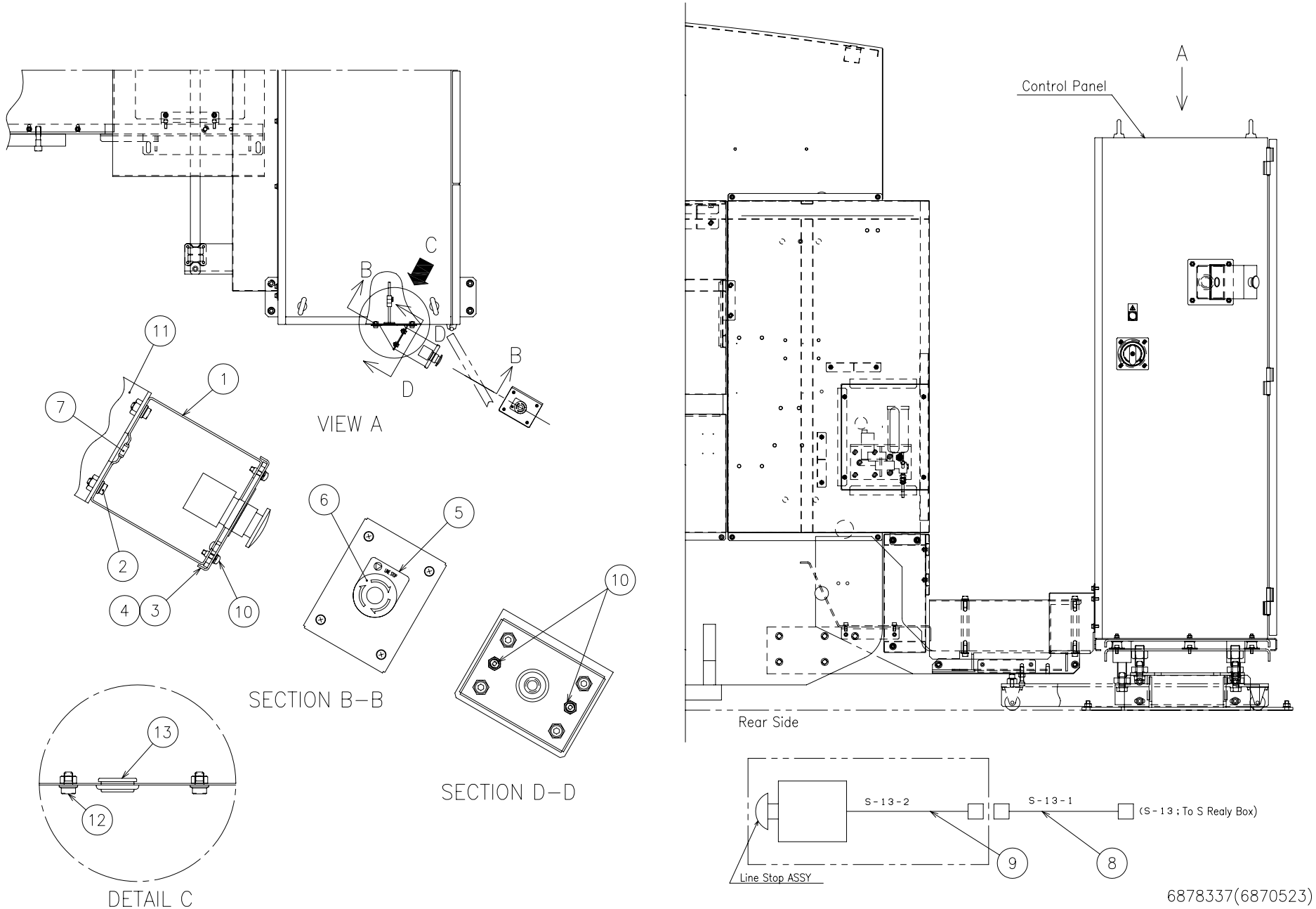
VIEW A
SECTION B–B
SECTION D–D
DETAIL C
Control Panel
Rear Side
S-13-2
S-13-1
(S-13 ; To S Realy Box)
Line Stop ASSY
6878337(6870523)

Unit No. 266

US Line (CR)-C(28) From Serial No.36102001 and after

Index	Code	Parts Name	Drawing No.	Type	Maker	Q'ty	Note
1	74572579	Push Button Box	6018276 A			1	
2	74731367	Flange Socket Bolt	P330468026	M6X12	NISSAN NEJI	4	
3	74572580	Cap	6018277 A			1	
4	74575288	Pan Head Screw with Washer	P334200117	M4X15(Chromate P-4)		4	
5	74307644	Legend Plate	6502736			1	for EU,EXP
5	74419506	Legend Plate	6817594			1	Chinese
6	74568712	Push Switch	P821124128	AR30V3R-01BZ235	FUJI Electric	1	
7	74380555	Bush For Cable	P229112017	C-30-NG-79-E	TAKIGEN	1	
8	74416458	Cable S-13-1	6811424			1	
9	74416459	Cable S-13-2	6811441			1	
10	74569457	Pan Head Screw with Washer	P334200114	M4X8(Chromate P-4)		3	(Ground)
11	74416457	Line Stopper Bracket	6827674			1	
12	75420638	Flange Socket Bolt	P330468018	M8X12	NISSAN NEJI	4	
13	74732487	Bush For Cable	P229112039	C-30-SG-30A	TAKIGEN	1	

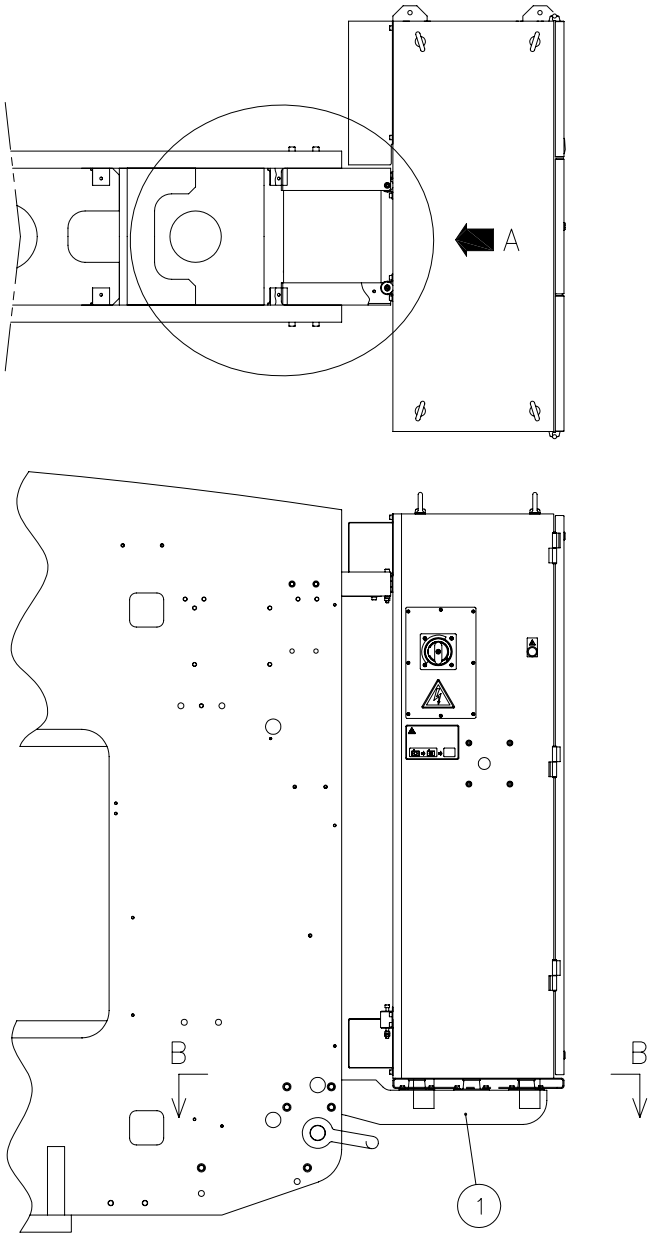

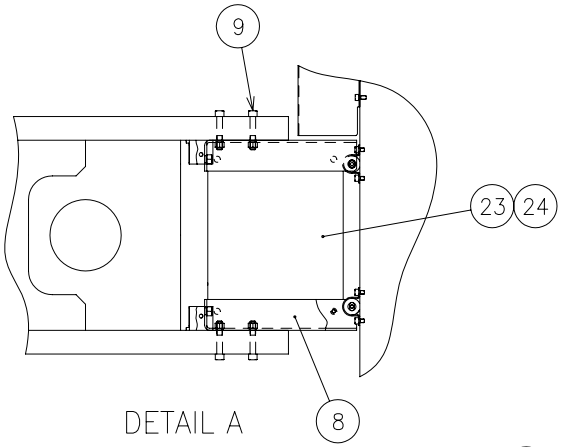

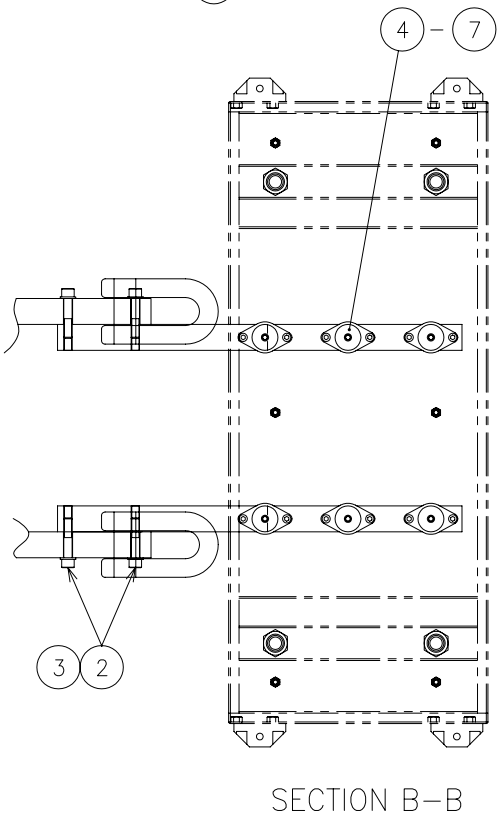

6876790

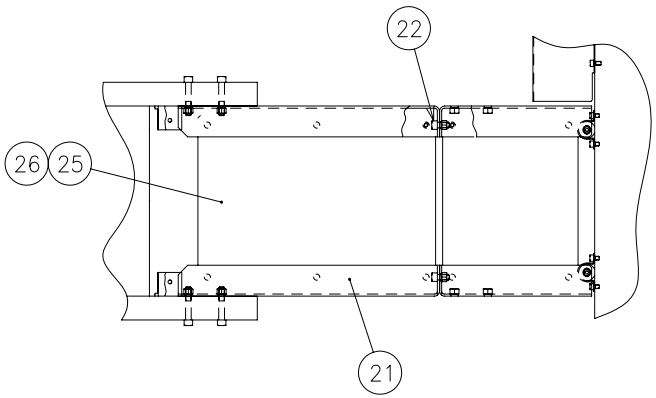

DETAIL C

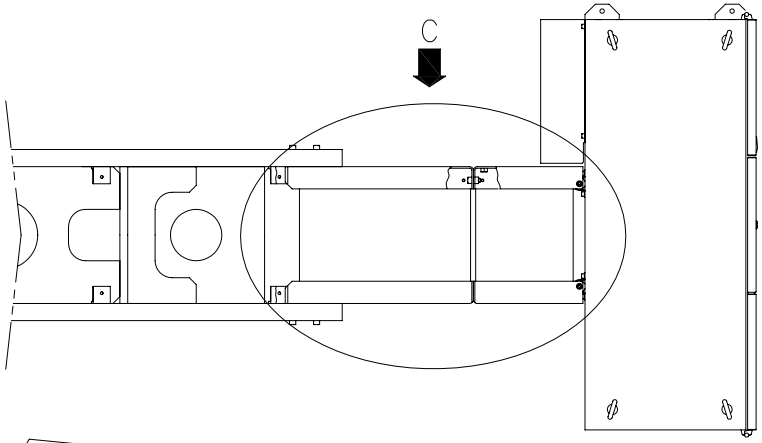

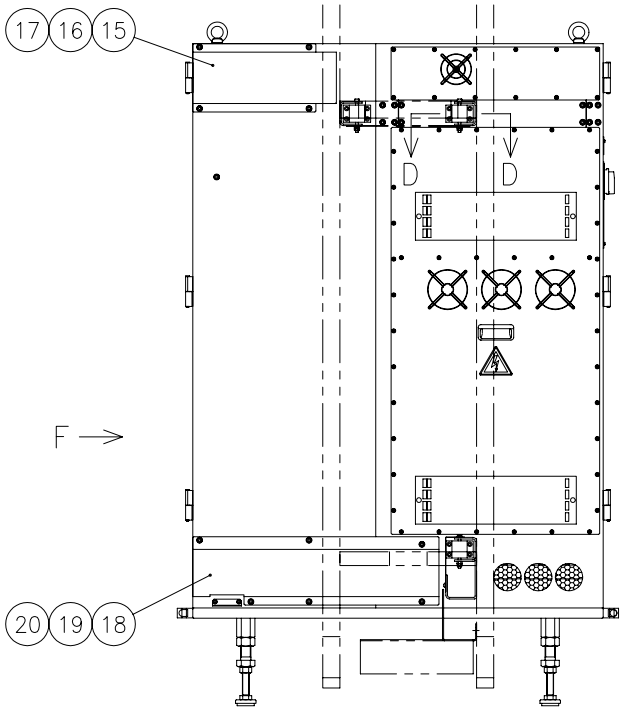

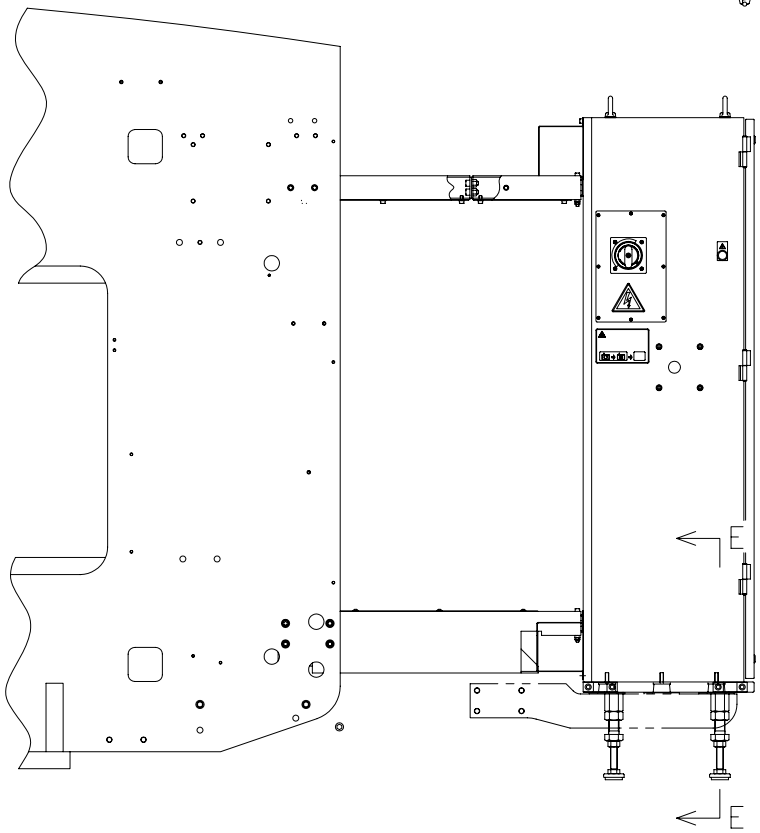

6876790

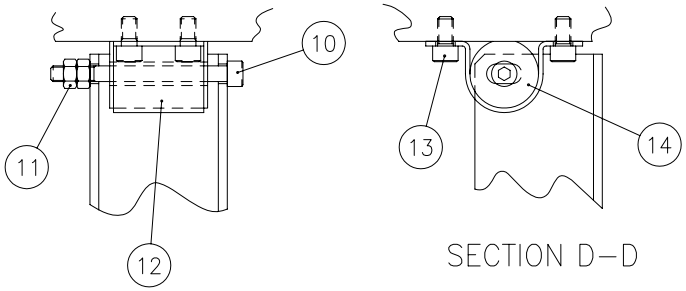

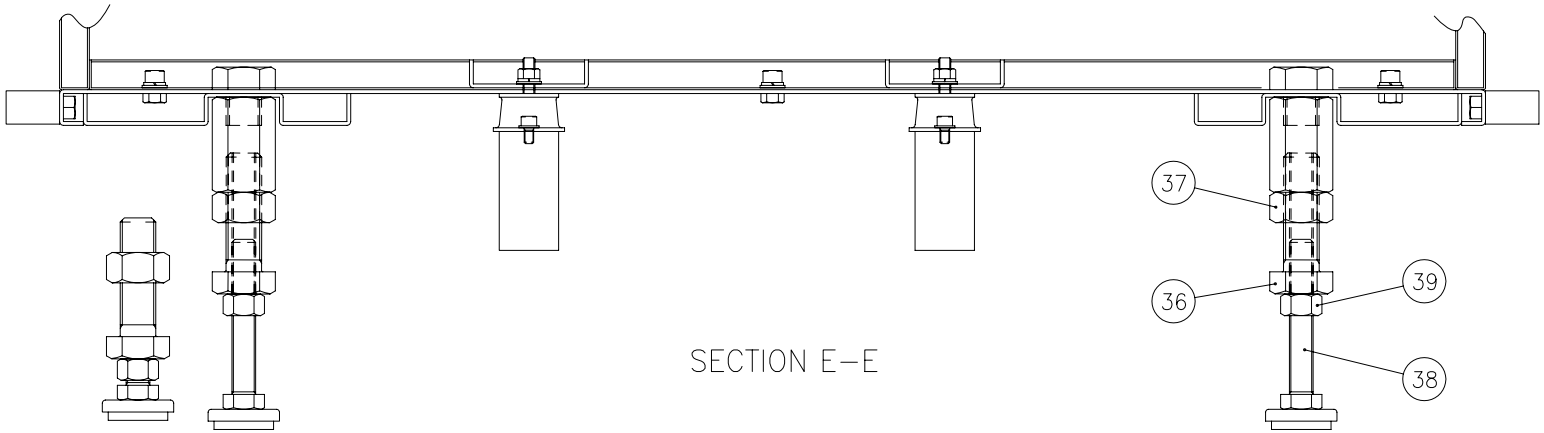

6876790

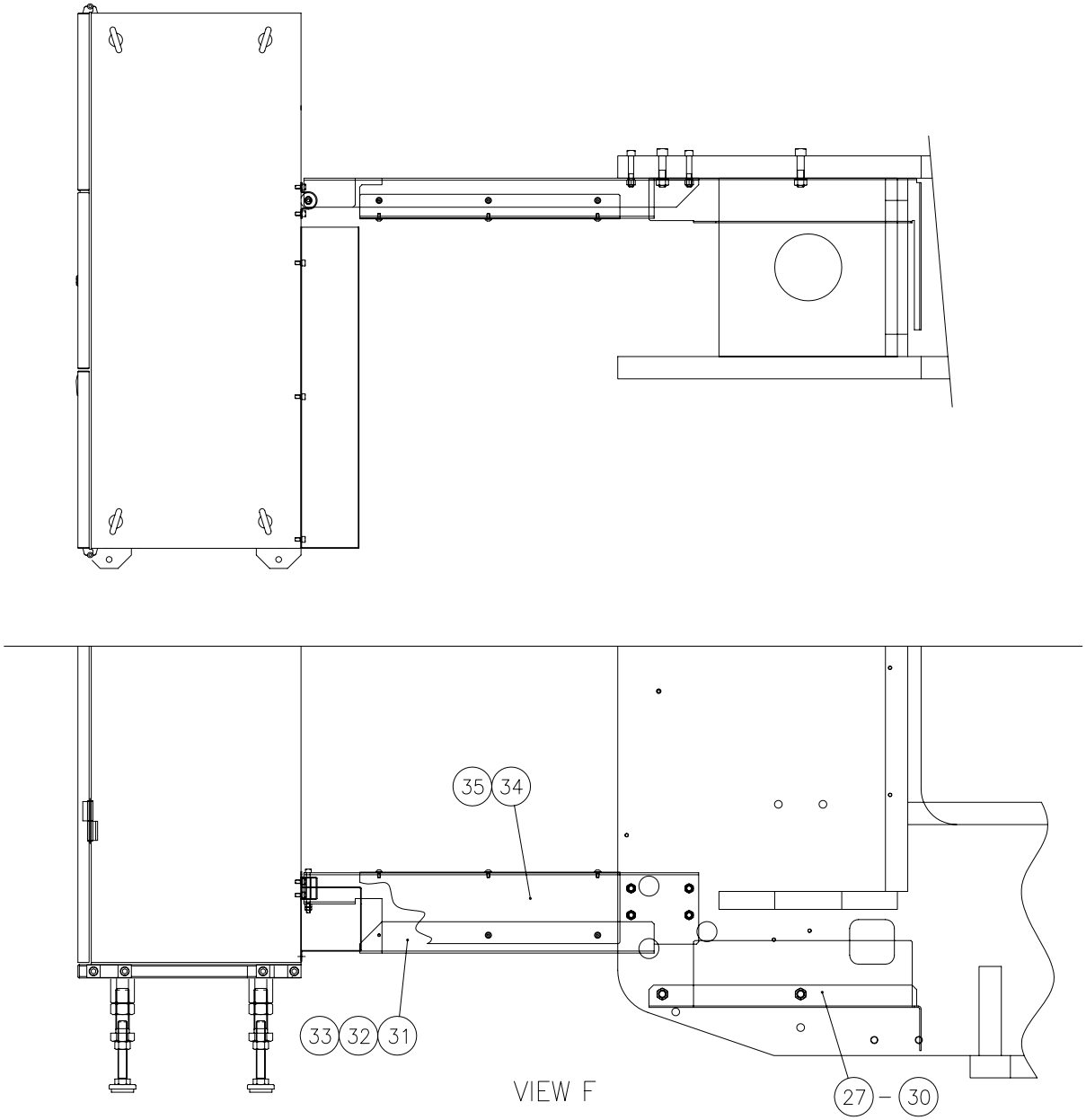
35
34
33
32
31
VIEW F
27 – 30
6876790

Index	Code	Parts Name	Drawing No.	Type	Maker	Q'ty	Note
1	74419507	Body Support	6813049			2	
2	36367712	Hex Soc Cap Screw	P330260040	M16X80		8	
3	10570320	Washer	P336000010	16(Regular Round)		8	
4	73115680	Vibration Isolator	P382002017	KLB-5045	KURASHIKI KAKO	6	
5	86611626	Washer	P336000007	10(Regular Round)		6	
6	79564804	Hex Soc Cap Screw	P330230006	M8X20		12	
7	79567109	Washer	P336000006	8(Regular Round)		12	
8	74419508	Stay (PDC)	6813050			2	
9	74302822	Hex Soc Cap Screw	P330250013	M12X70		4	
10	36115339	Hex Soc Cap Screw	P330230020	M8X90		3	
11	74300504	Nut	P332000005	M8		6	
12	74385992	Rubber Holder	0818904			3	
13	79565423	Hex Soc Cap Screw	P330230004	M8X15		12	
14	74385993	Antivibration Rubber	P229242002	KK-3512-50	KURASHIKI KAKO	3	
15	74418512	Wiring Cover (Upper)	6875412			1	
16	10323205	Hex Soc Cap Screw	P330230001	M8X10		4	
17	74570021	Grommet	P229125011	KG016L-0.5M	KITAGAWA	1	
18	74419509	Wiring Cover (PDC)(Lower)	6876795			1	
19	10323205	Hex Soc Cap Screw	P330230001	M8X10		6	

Index	Code	Parts Name	Drawing No.	Type	Maker	Q'ty	Note
20	74570021	Grommet	P229125011	KG016L-0.5M	KITAGAWA	1	
21	74419510	Stay	6813053			2	
22	79568704	Hex Soc Cap Screw	P330250004	M12X25		4	
23	74419511	Cable Support (A)(Upper)	6813054			1	
24	74382078	Flange Socket Bolt	P330468006	M8X15	NISSAN NEJI	4	
25	74419512	Cable Support (B)(Upper)	6813055			1	
26	74382078	Flange Socket Bolt	P330468006	M8X15	NISSAN NEJI	6	
27	74419513	Cable Support (Lower)	6873039			1	
28	36367710	Hex Soc Cap Screw	P330260038	M16X70		2	
29	31183536	Nut	P332000009	M16		2	
30	10428899	Grommet	P229125059	KG032-0.4M	KITAGAWA	1	
31	74419514	Stay (Lower)	6876796			1	
32	74302822	Hex Soc Cap Screw	P330250013	M12X70		4	
33	86613931	Washer	P336000008	12(Regular Round)		4	
34	74419515	Stay Cover (Lower)	6876797			1	
35	74569504	Button Head Screw	7830643		MOURI	6	
36	74385995	Level Bolt	6593617			4	
37	74320426	Nut	P332000012	M30		4	
38	74570064	Level Adjuster	P384022021	KC-280-0	TAKIGEN	4	

From Serial No.36102001 and after

Index	Code	Parts Name	Drawing No.	Type	Maker	Q'ty	Note
39	31186248	Nut	P332000010	M20		4	

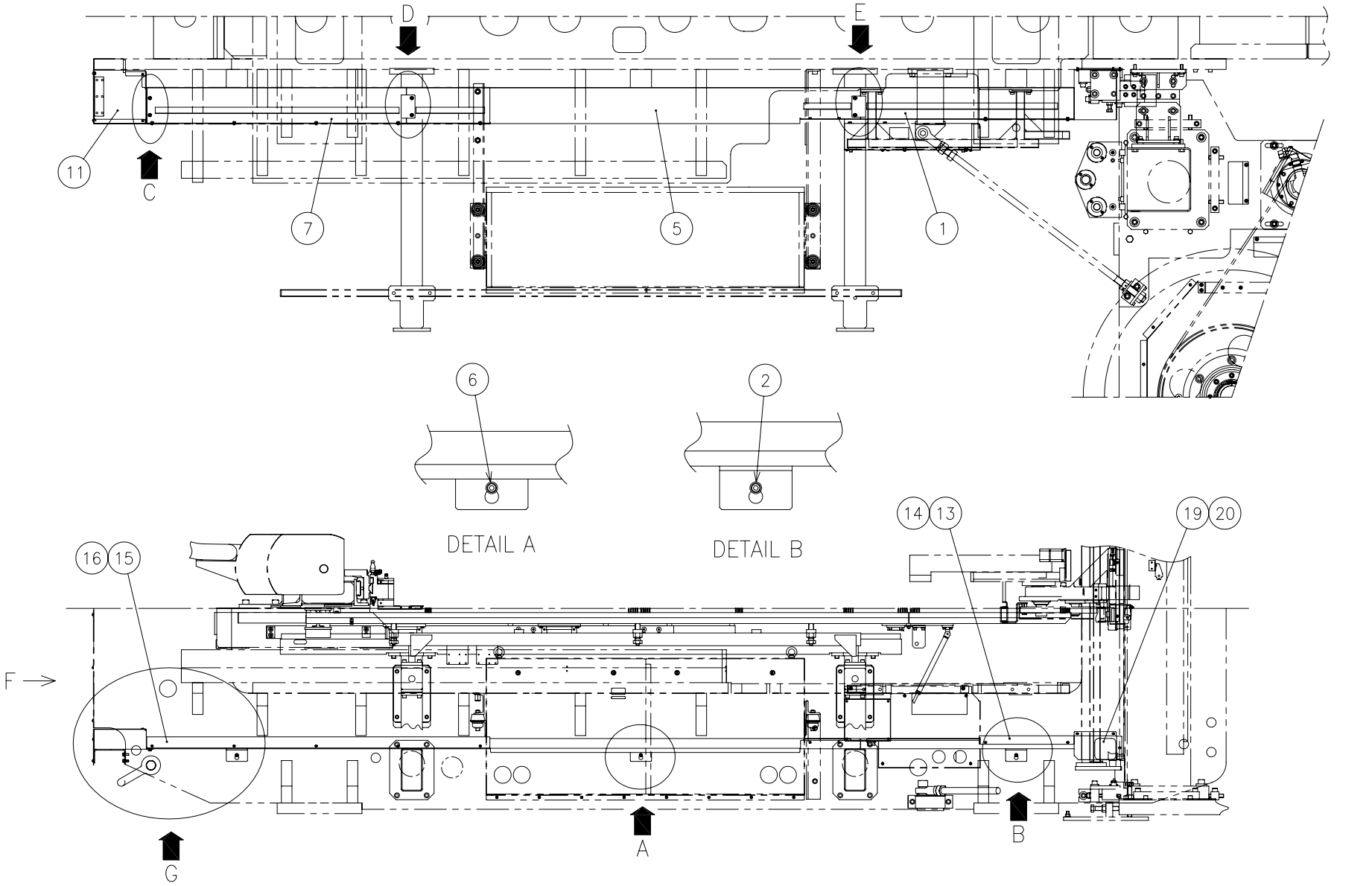
D
E
11
C
7
5
1
6
2
DETAIL A
DETAIL B
14
13
19
20
16
15
F
G
A
B
6876791

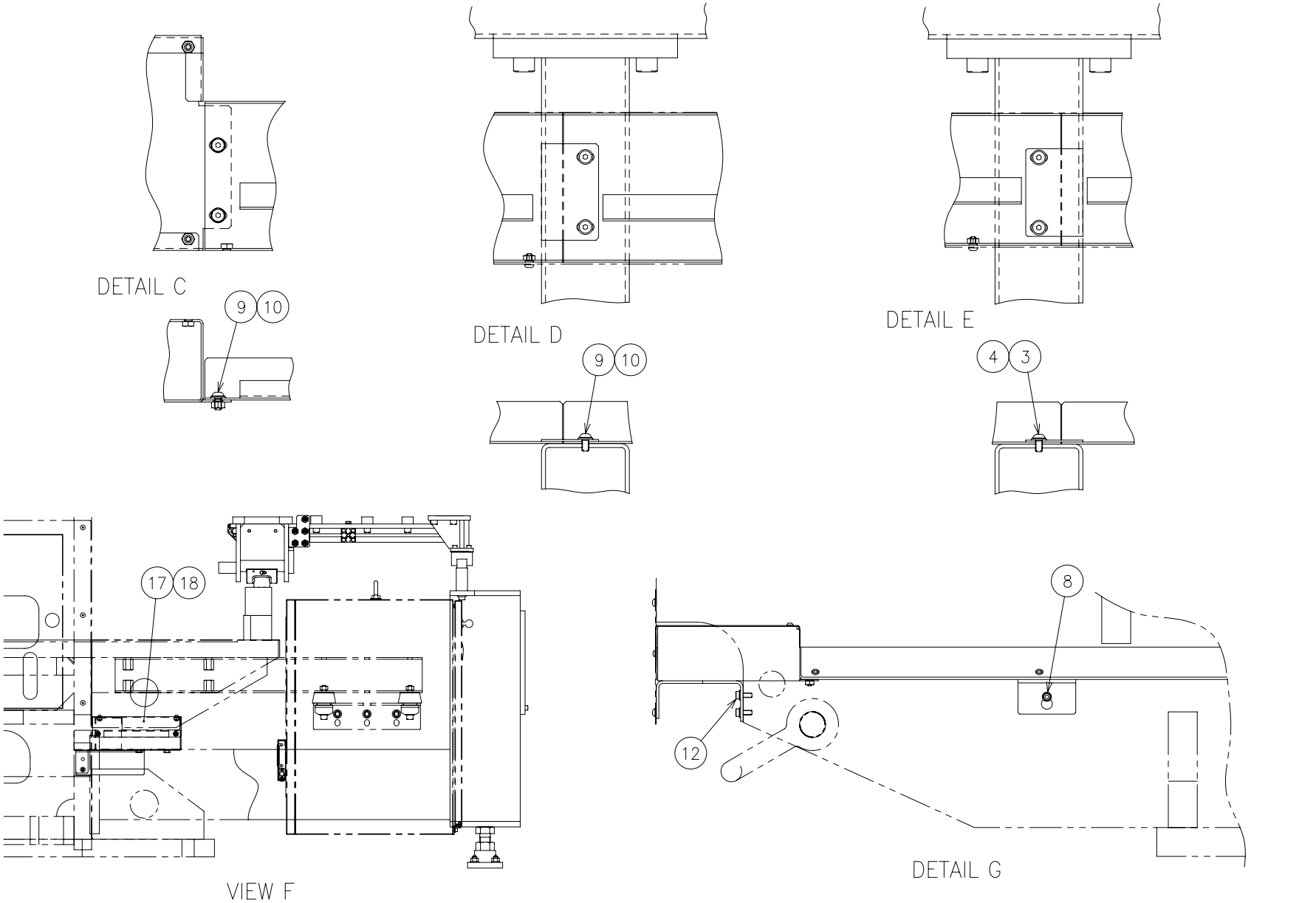
DETAIL C
9
10
DETAIL D
9
10
DETAIL E
4
3
17
18
VIEW F
8
12
DETAIL G
6876791

Index	Code	Parts Name	Drawing No.	Type	Maker	Q'ty	Note
1	74419516	Duct (A)	6876799			1	
2	75420815	Flange Socket Bolt	P330468001	M8X20	NISSAN NEJI	1	
3	10569021	Button Head Screw	P334500019	M8X15		2	
4	79567109	Washer	P336000006	8(Regular Round)		2	
5	74418515	Duct (B)	6875595			1	
6	75420815	Flange Socket Bolt	P330468001	M8X20	NISSAN NEJI	1	
7	74418516	Duct (C)	6875596			1	
8	75420815	Flange Socket Bolt	P330468001	M8X20	NISSAN NEJI	1	
9	10569021	Button Head Screw	P334500019	M8X15		4	
10	79567109	Washer	P336000006	8(Regular Round)		4	
11	74418517	Duct (D)	6875597			1	
12	75420815	Flange Socket Bolt	P330468001	M8X20	NISSAN NEJI	2	
13	74419517	Duct Cover (A)	6876800			1	
14	74569504	Button Head Screw	7830643		MOURI	2	
15	74418519	Duct Cover (C)	6875599			1	
16	74569504	Button Head Screw	7830643		MOURI	5	
17	74418520	Duct Cover (D)	6875600			1	
18	74569504	Button Head Screw	7830643		MOURI	4	
19	74419518	Wiring Cover (A)	6876801			1	

Index	Code	Parts Name	Drawing No.	Type	Maker	Q'ty	Note
20	74569504	Button Head Screw	7830643		MOURI	3	

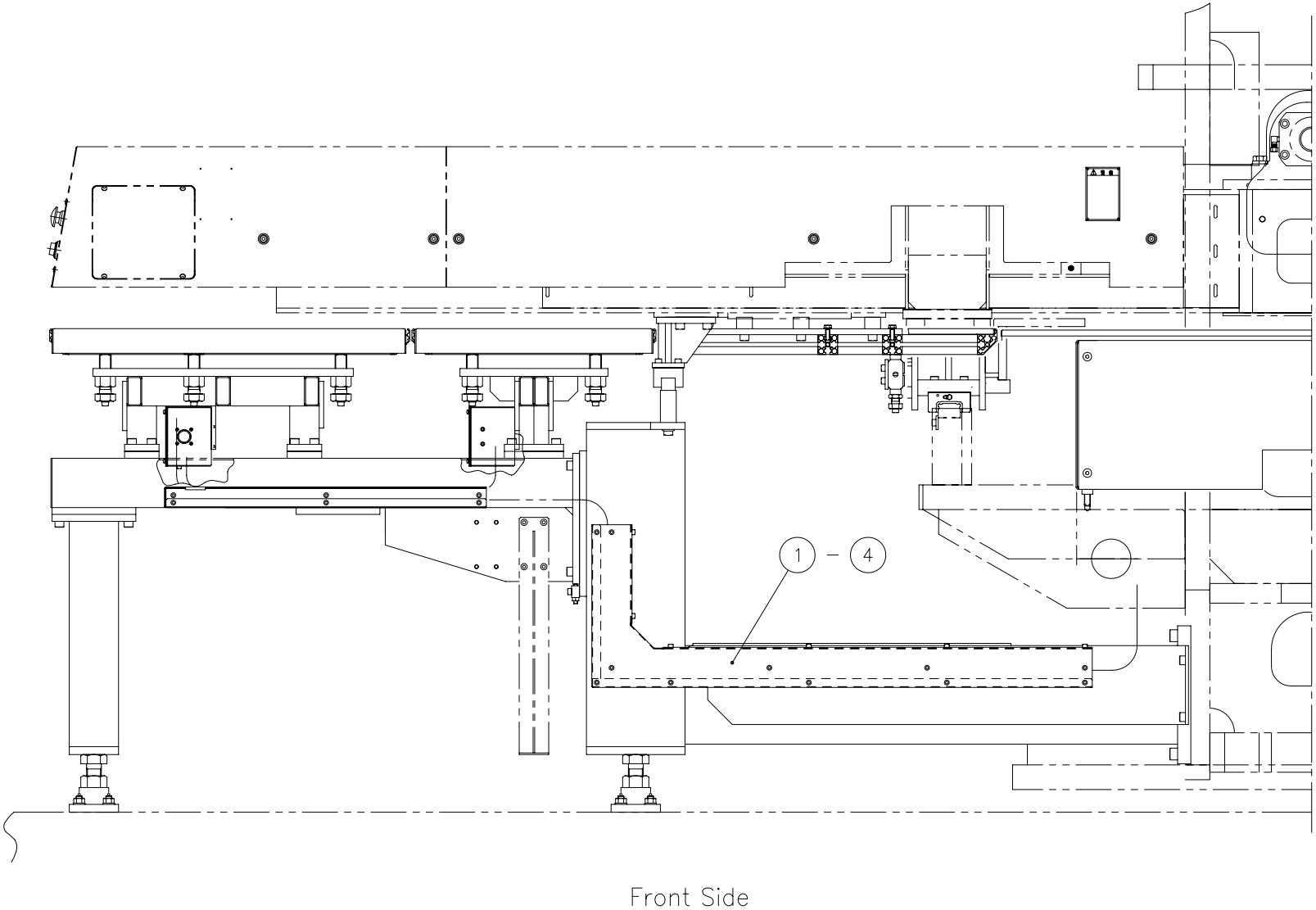
1 – 4
Front Side
6871034

Unit No. 269

US Line (CR)-C(31) From Serial No.36102001 and after

Index	Code	Parts Name	Drawing No.	Type	Maker	Q'ty	Note
1	74575150	Duct (L)	6823854			1	
2	79564305	Hex Soc Cap Screw	P330220006	M6X15		5	
3	74575235	Duct Cover (L)	6823857			1	
4	79564305	Hex Soc Cap Screw	P330220006	M6X15		12	

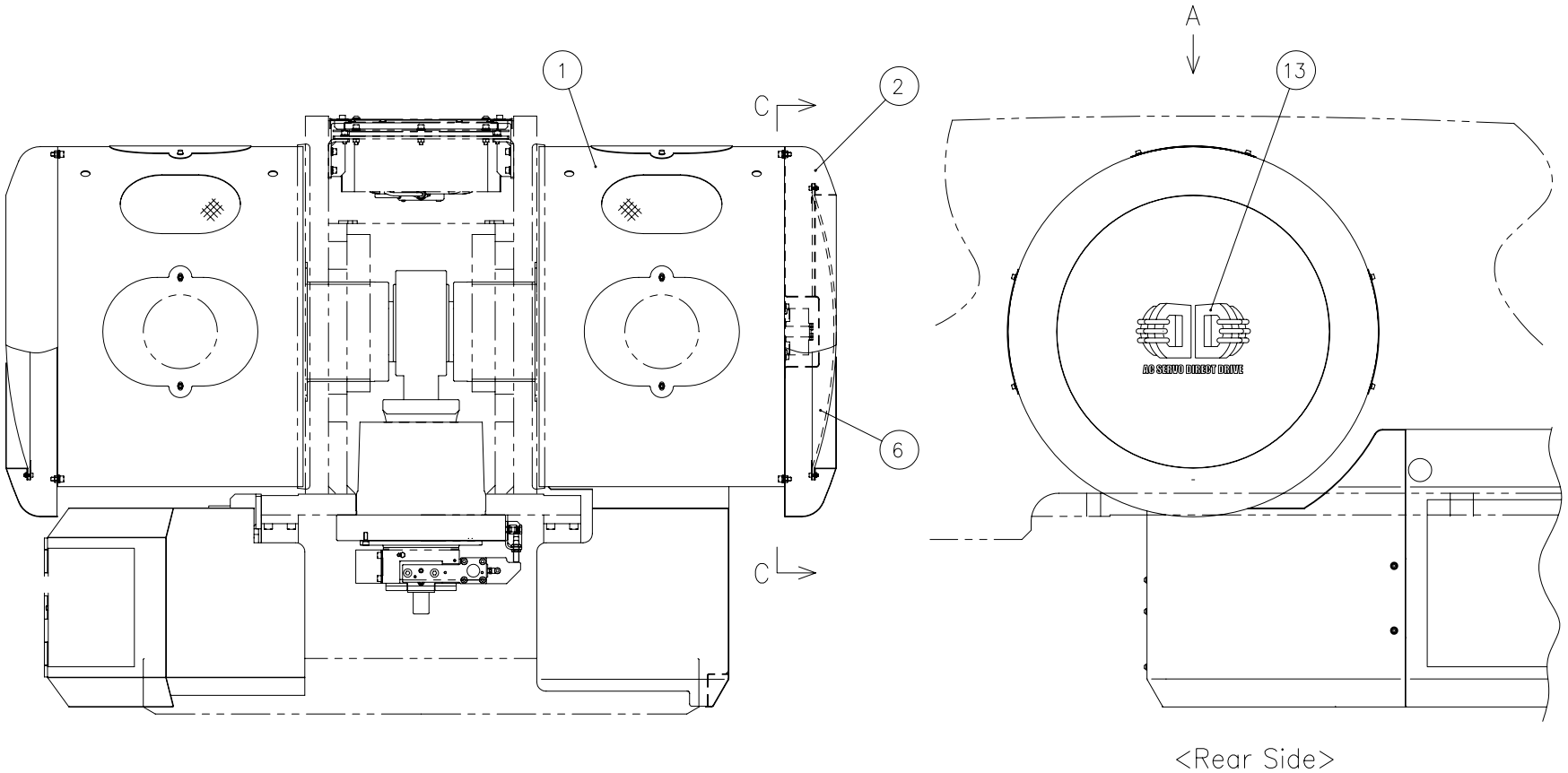

6876446
(6879410)

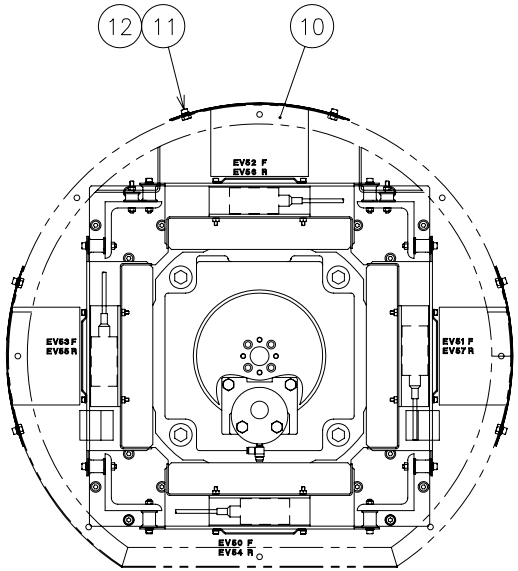

SECTION B–B

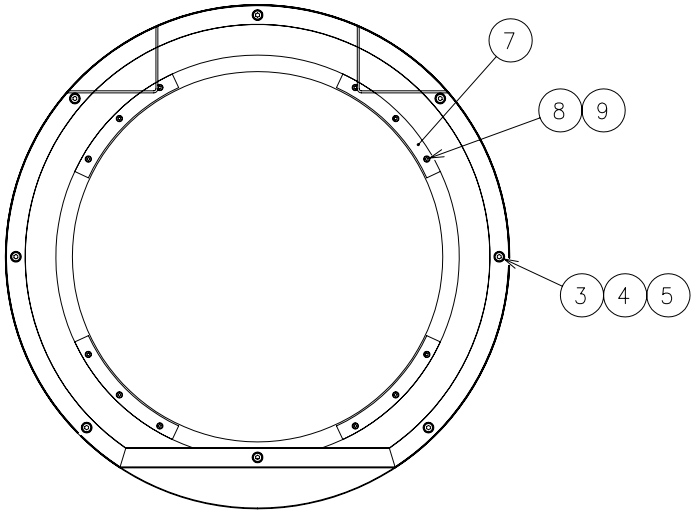

SECTION C–C

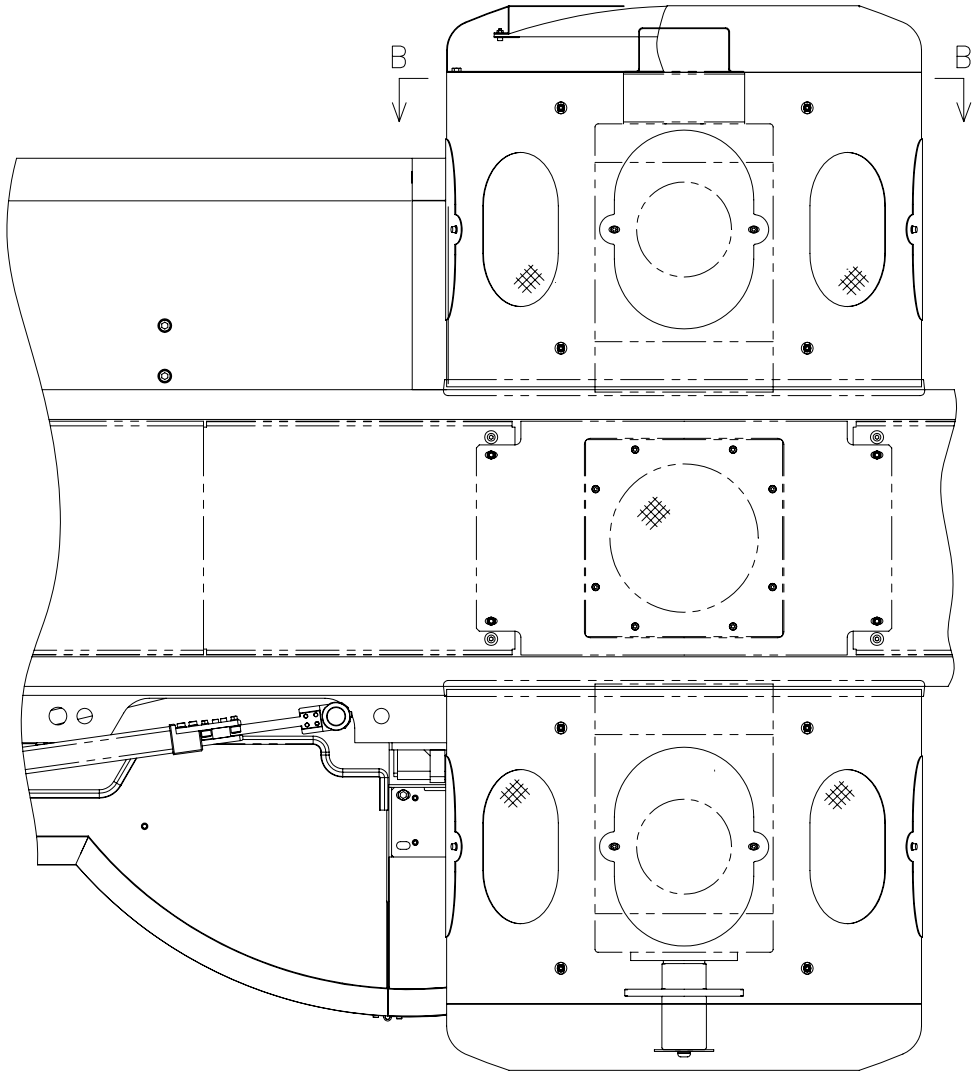

VIEW A

6876446
(6879410)

Index	Code	Parts Name	Drawing No.	Type	Maker	Q'ty	Note
1	74419183	Drive Cover (Cylindrical) R	6876454 A			1	
2	74415356	Drive Cover (Cap)	6828452			1	
3	79564804	Hex Soc Cap Screw	P330230006	M8X20		5	
4	86610326	Spring Washer	P336050006	8		5	
5	79567109	Washer	P336000006	8(Regular Round)		5	
6	74415344	Drive Cover (Window)	6828453			1	
7	74415351	Window Support	6828454			4	
8	79316109	Hex Soc Cap Screw	P330210006	M5X15		12	
9	31182981	Washer	P336000080	5(Regular Round)		12	
10	74415918	Maintenance Cap (Drive Cover)	6829173			3	
11	79565201	Hex Soc Cap Screw	P330220004	M6X12		6	
12	79565419	Washer	P336000005	6(Regular Round)		6	
13	74417167	DD Mark 250	6170100			1	

<List Only>

6703029	FANUC (RMP)	1 - 5

6703029

Unit No. 271
US Line (CR)-C(33) From Serial No.36102001 and after

Index	Code	Parts Name	Drawing No.	Type	Maker	Q'ty	Note
1	71590251	Device-Net Interface Board	P767478049	A02B-0281-J307	FANUC	1	
2	71516927	Device-Net Control Software	P767485521	A02B-0236-J564#6571	FANUC	1	
3	74417305	Device-Net Application Software	P767485522	A02B-0236-J565#6576	FANUC	1	
4	71516690	Accessory (Program Controller)	P767485352	A02B-0282-S723	FANUC	1	
5	71516687	Accessory (Program Controller)	P767485353	A02B-0259-K211	FANUC	1	

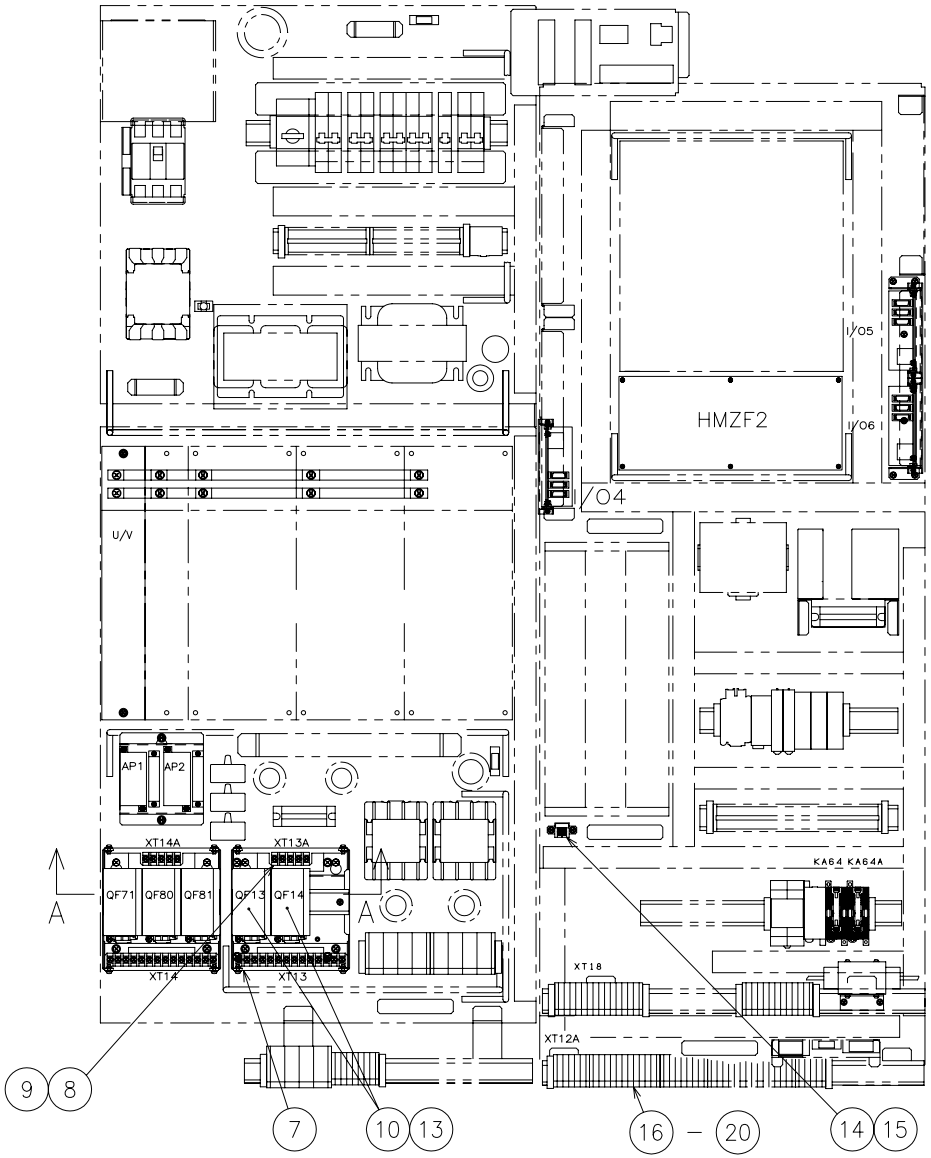

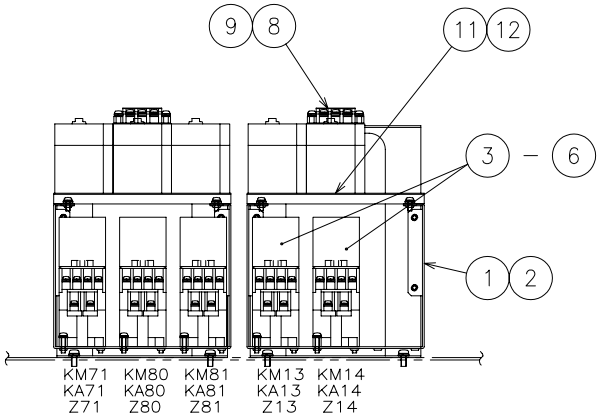

SECTION A–A

6708616
(6701376#1)

Index	Code	Parts Name	Drawing No.	Type	Maker	Q'ty	Note
1	74416362	OP Chassis 1 (EMFE)	6705415			1	
2	74577525	Pan Head Screw with Washer	P334200183	M4X10(Chromate P-3)		8	
3	74572132	Electro-Magnetic Contactor	P810004046	SC-03/T-AC100V	FUJI Electric	2	KM13,14
4	74417689	Pan Head Screw with Washer	P334200176	M4X16(Chromate P-4)		4	
5	74417799	Accessory(Electro-Magnetic SW)	P810184012	SZ-ZM1	FUJI Electric	2	Z13,14
6	45253279	Coil Driving Relay	P810184009	SZ-CD1	FUJI Electric	2	KA13,14
7	74416365	Block Terminal	P864008065	OGM-300NE-B-12P-C-M4	OSADA	1	XT13
8	74416366	Terminal Block		OGM-300NE-M-3P-C-M4	OSADA	1	XT13A
9	74417689	Pan Head Screw with Washer	P334200176	M4X16(Chromate P-4)		4	
10	71513742	Low Voltage Breaker	P812048027	PKZM0-2.5+NHI11	MURA Electric	2	QF13,14
11	74419467	Terminal Base		DAV4(L=162.5)	TOYO GIKEN	1	
12	74577525	Pan Head Screw with Washer	P334200183	M4X10(Chromate P-3)		4	
13	74419089	WP130	670285330			1	
14	71516682	Accessory (Program Controller)	P767482031	DRS1-T	OMRON	1	X
15	74577525	Pan Head Screw with Washer	P334200183	M4X10(Chromate P-3)		2	
16	75428211	Block Terminal	P864002026	BN15MW	IDEC	5	XT12A
17	31182112	Terminal Parts	P864052019	BNE15W	IDEC	2	(XT12A)
18	74417298	Terminal Label	P864072117	BNM7(40)	IDEC	1	(XT12A)
19	74417299	Terminal Cover	P864062117	BNC230(50)	IDEC	1	(XT12A)

From Serial No.36102001 and after

Index	Code	Parts Name	Drawing No.	Type	Maker	Q'ty	Note
20	74419186	WP125	670285325			1	

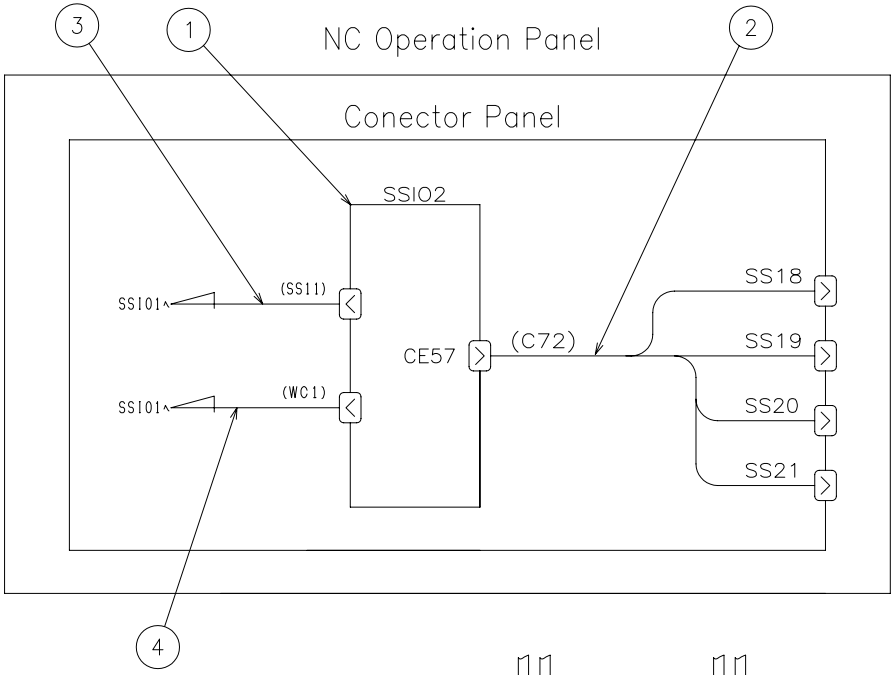

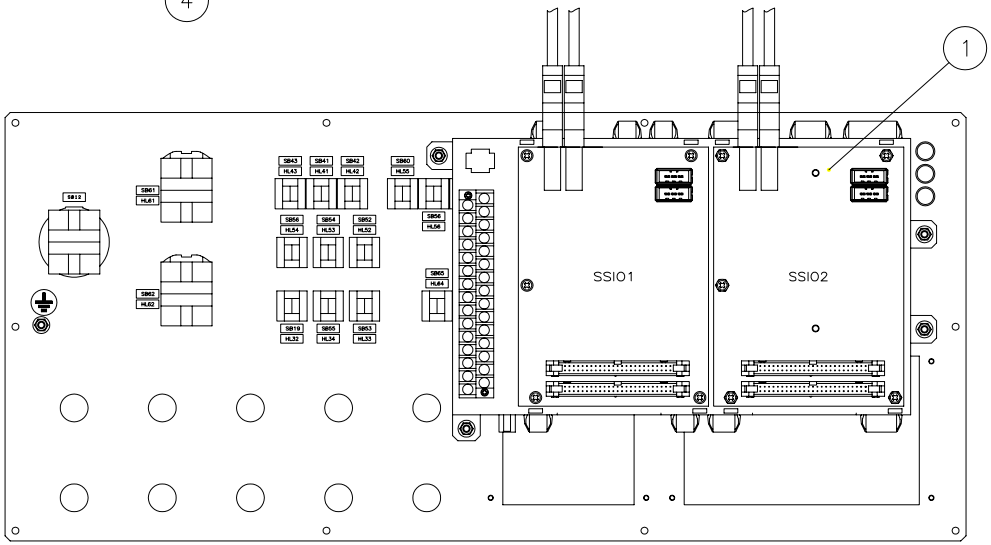

NC Operation Panel(Rear)

6703245
6703219B

Index	Code	Parts Name	Drawing No.	Type	Maker	Q'ty	Note
1	71369424	Accessory (Program Controller)	P767485288	A20B-2002-0521	FANUC	1	SSIO2
2	74419466	Cable (C72)	670526003A			1	
3	74572012	Cable (SS11)	670246008			1	
4	74572014	Cable (WC1)	670246010			1	

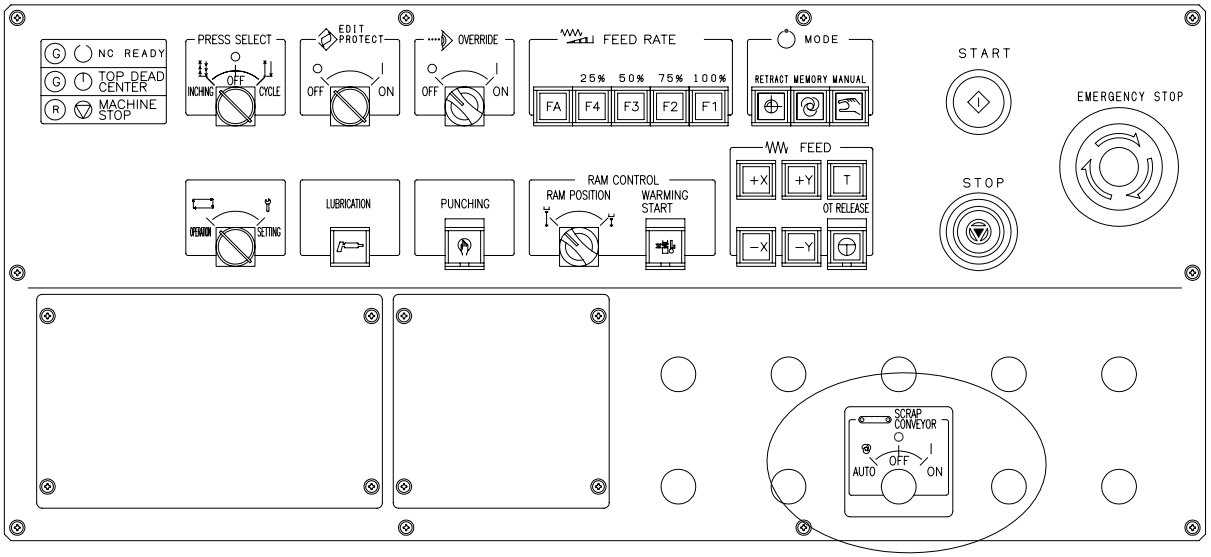

NC Operation Panel

A

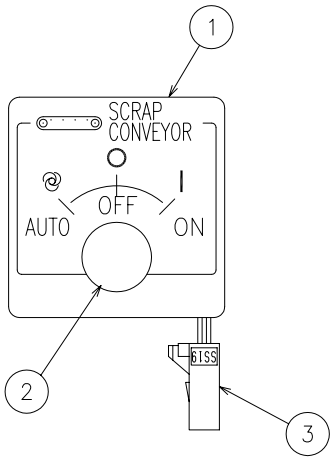

DETAIL A

6706208A
(6706208A)

Unit No. 274

US Line (CR)-C(36) From Serial No.36102001 and after

Index	Code	Parts Name	Drawing No.	Type	Maker	Q'ty	Note
1	74416371	Scrap Conveyor Operation Panel	6706169 A			1	
2	74416372	Key Select Switch	P820004089	AH165-SPK3B22	FUJI Electric	1	SA10
3	74417792	Cable (SS19)	670617214A			1	

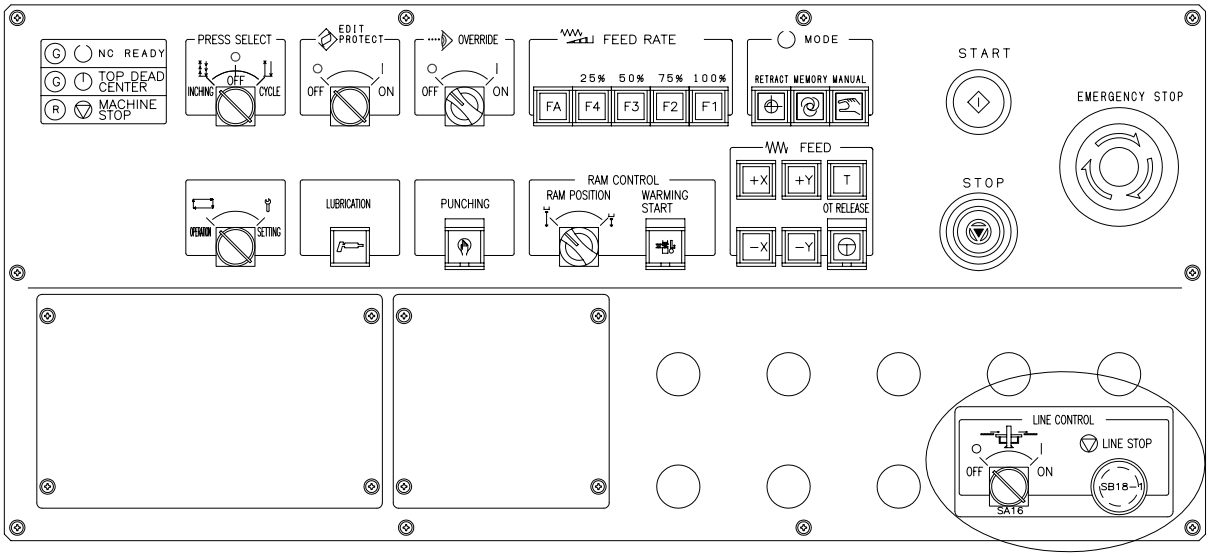

NC Operation Panel

A

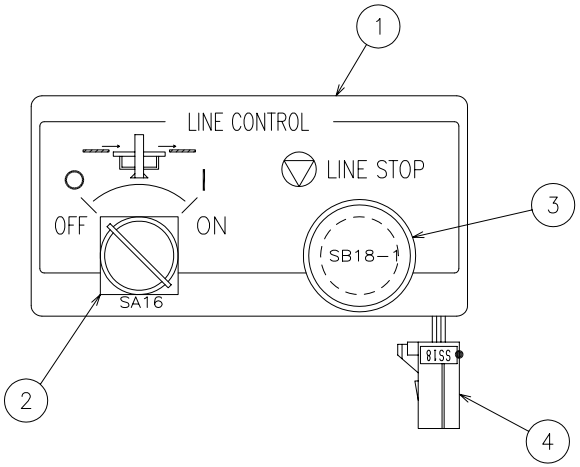

DETAIL A

6707946
(6703222)

Unit No. 275

US Line (CR)-C(37) From Serial No.36102001 and after

Index	Code	Parts Name	Drawing No.	Type	Maker	Q'ty	Note
1	74416381	Line Operation Panel	6706161 A			1	
2	74577659	Key Select Switch	P820014159	AH165-SJ2B11A	FUJI Electric	1	SA16
3	74418013	Push Switch	P821104021	AH165-M5B11	FUJI Electric	1	SB18-1
4	74417788	Cable (SS18)	670617213A			1	

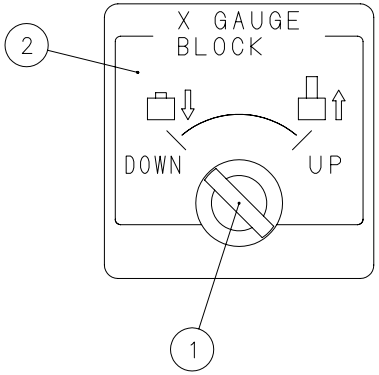

6705899

Unit No. 276

US Line (CR)-C(38) From Serial No.36102001 and after

Index	Code	Parts Name	Drawing No.	Type	Maker	Q'ty	Note
1	74572036	Key Select Switch	P820004029	AH165-SP2B11	FUJI Electric	1	SA7-1
2	74417794	Locating Pin Operation Panel	6706171 A			1	
3	74417795	Cable (SS16)	670617211A			1	List Only

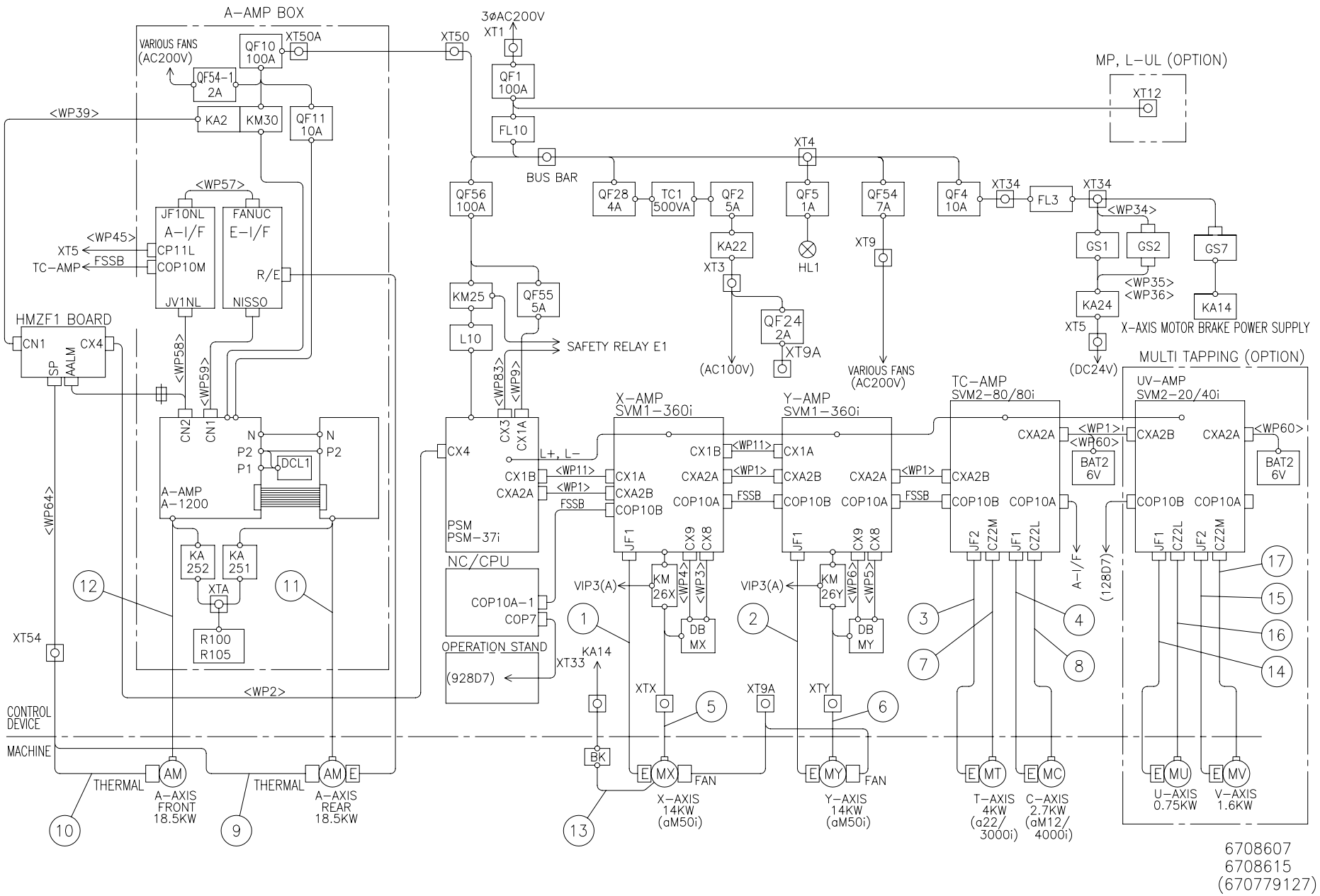
A-AMP BOX
VARIOUS FANS (AC200V)
QF10 100A
XT50A
XT50
QF54-1 2A
KA2
KM30
QF11 10A
<WP39>
<WP57>
JF10NL
A-I/F
CP11L
COP10M
JV1NL
FANUC
E-I/F
R/E
NISSO
<WP45>
XT5
FSSB
TC-AMP
HMZF1 BOARD
CN1
CX4
SP
AALM
<WP58>
<WP59>
CN2
CN1
N
P2
P1
DCL1
A-AMP A-1200
KA 252
KA 251
XTA
R100
R105
XT54
<WP64>
<WP2>
CONTROL DEVICE
MACHINE
THERMAL
AM
A-AXIS FRONT 18.5KW
A-AXIS REAR 18.5KW
E
3ØAC200V
XT1
QF1 100A
FL10
BUS BAR
QF56 100A
KM25
L10
QF55 5A
SAFETY RELAY E1
<WP83>
<WP9>
CX3
CX1A
PSM PSM-37i
L+, L-
NC/CPU
COP10A-1
COP7
OPERATION STAND
(928D7)
XT33
KA14
BK
MP, L-UL (OPTION)
XT12
XT4
QF28 4A
TC1 500VA
QF2 5A
QF5 1A
QF54 7A
QF4 10A
XT34
FL3
<WP34>
KA22
XT3
HL1
XT9
QF24 2A
XT9A
(AC100V)
VARIOUS FANS (AC200V)
GS1
GS2
GS7
<WP35>
<WP36>
KA24
KA14
X-AXIS MOTOR BRAKE POWER SUPPLY
(DC24V)
MULTI TAPPING (OPTION)
X-AMP SVM1-360i
Y-AMP SVM1-360i
TC-AMP SVM2-80/80i
UV-AMP SVM2-20/40i
CX1B
CXA2A
<WP11>
<WP1>
CX1A
CXA2B
COP10B
COP10A
FSSB
JF1
CX9
CX8
JF2
CZ2M
CZ2L
<WP60>
BAT2 6V
A-I/F
(128D7)
VIP3(A)
KM 26X
KM 26Y
<WP4>
<WP3>
<WP6>
<WP5>
DB MX
DB MY
XTX
XTY
XT9A
MX
MY
MT
MC
MU
MV
FAN
X-AXIS 14KW (aM50i)
Y-AXIS 14KW (aM50i)
T-AXIS 4KW (a22/ 3000i)
C-AXIS 2.7KW (aM12/ 4000i)
U-AXIS 0.75KW
V-AXIS 1.6KW
1
2
3
4
5
6
7
8
9
10
11
12
13
14
15
16
17
6708607
6708615
(670779127)

Index	Code	Parts Name	Drawing No.	Type	Maker	Q'ty	Note
1	74419519	X Signal Cable (JF1(X))	670271201			1	
2	74419520	Y Signal Cable (JF1(Y))	670271202			1	
3	74419521	T Signal Cable (JF2(T))	670271203			1	
4	74419522	C Signal Cable (JF1(C))	670271204			1	
5	74419523	X-axis Motor Cable (X)	670271205			1	
6	74419524	Y Motor Cable (Y)	670271206			1	
7	74419525	T Motor Cable (T)	670271207			1	
8	74419526	C Motor Cable (C)	670271208			1	
9	74419527	Cable (THA)	670271213			1	
10	74419528	Cable (THB)	670271214			1	
11	74419529	P Motor Cable (PA)	670271215			1	
12	74419530	P Motor Cable (PB)	670271216			1	
13	74419531	X-axis Brake Cable (X-BK)	670271217			1	
14	74419532	U Signal Cable (JF1(U))	670271209			1	
15	74419533	V Signal Cable (JF2(V))	670271210			1	
16	74419534	U Motor Cable (U)	670271211			1	
17	74419535	V Motor Cable (V)	670271212			1	
18	74419536	Amplifier Box Cable 1	670271401			1	List Only
19	74419537	Amplifier Box Cable 2	670271402			1	List Only

Index	Code	Parts Name	Drawing No.	Type	Maker	Q'ty	Note
20	74419538	Amplifier Box Cable 3	670271403			1	List Only
21	74419539	Amplifier Box Power Cable	670271404			1	List Only

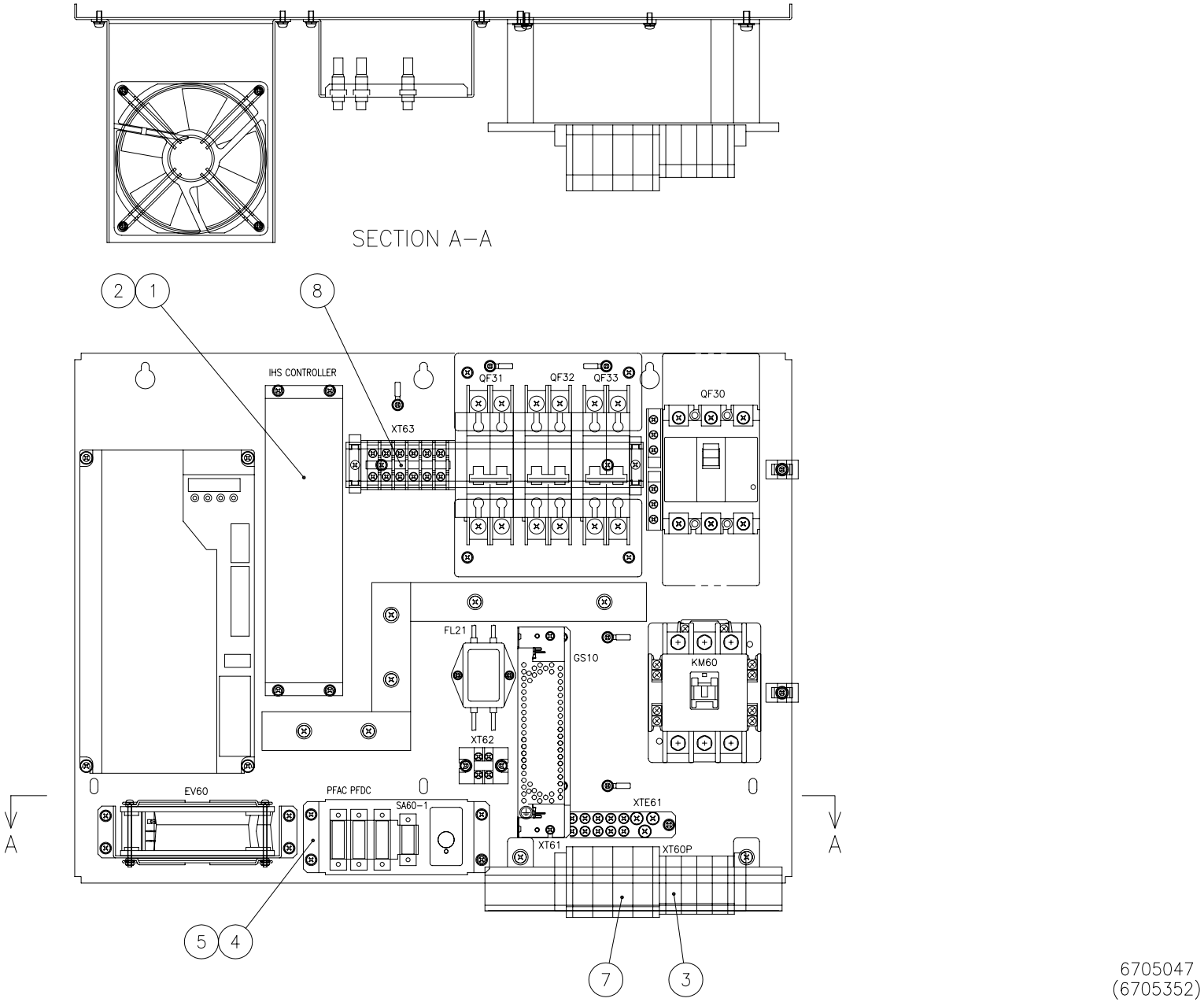
SECTION A–A
2
1
8
IHS CONTROLLER
QF31
QF32
QF33
QF30
XT63
FL21
GS10
KM60
XT62
EV60
PFAC PFDC
SA60–1
XTE61
XT61
XT60P
A
A
5
4
7
3
6705047
(6705352)

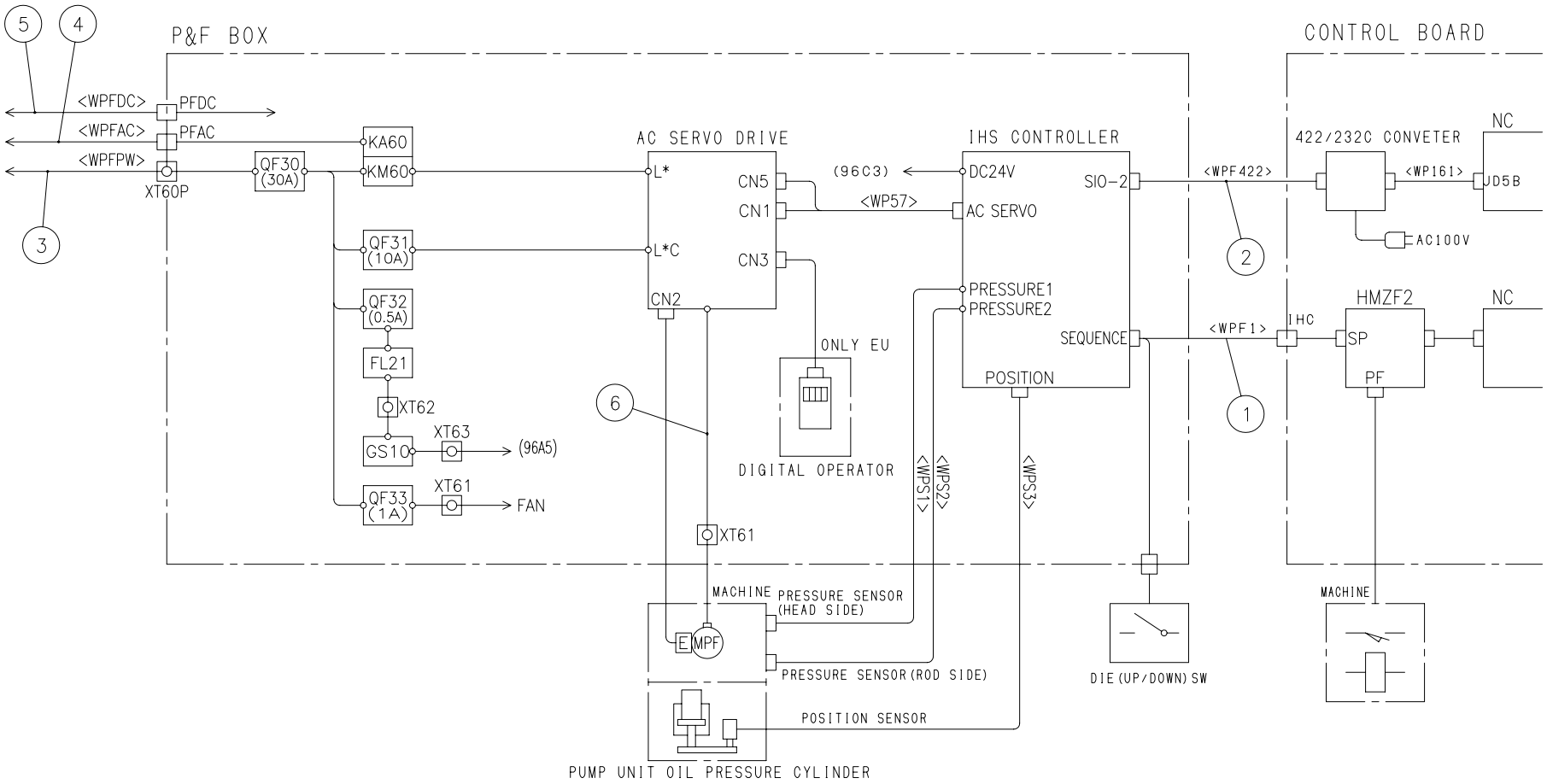
P&F BOX
CONTROL BOARD
<WPFDC>
PFDC
<WPFAC>
PFAC
<WPFPW>
XT60P
QF30 (30A)
KA60
KM60
QF31 (10A)
QF32 (0.5A)
FL21
XT62
GS10
XT63
(96A5)
QF33 (1A)
XT61
FAN
AC SERVO DRIVE
L*
L*C
CN5
CN1
CN3
CN2
XT61
(96C3)
<WP57>
ONLY EU
DIGITAL OPERATOR
IHS CONTROLLER
DC24V
AC SERVO
PRESSURE1
PRESSURE2
POSITION
SIO-2
SEQUENCE
<WPS1>
<WPS2>
<WPS3>
<WPF422>
<WPF1>
422/232C CONVETER
<WP161>
JD5B
NC
AC100V
IHC
HMZF2
SP
PF
NC
MACHINE
PRESSURE SENSOR (HEAD SIDE)
MPF
PRESSURE SENSOR (ROD SIDE)
POSITION SENSOR
PUMP UNIT OIL PRESSURE CYLINDER
DIE (UP/DOWN) SW
MACHINE
1
2
3
4
5
6

670779096

Unit No. 278
US Line (CR)-C(40) From Serial No.36102001 and after

Index	Code	Parts Name	Drawing No.	Type	Maker	Q'ty	Note
1	74419540	WPF1	670504701			1	
2	74419541	WPF422	670504702			1	
3	74419542	WPFPW	670504703			1	
4	74419543	WPFAC	670504704			1	
5	74419544	WPFDC	670504705			1	
6	74419545	WPFM	670504906B			1	
7	74419546	WSA60	670504907A			1	
8	74419547	Cable (Q10)	670504708			1	