MAR. 1983

PARTS LIST

PRESS BRAKE (TYPE-ZII)

RG-25
(From ser. No. 254462)

RG-35S
(From ser. No. 351586)

RG-50S
(From ser. No.)

RG-50
(From ser. No. 504092)

RG-80S
(From ser. No. 804523)

RG-80
(From ser. No. 805011)

RG-100S
(From ser. No. 101916)

RG-100
(From ser. No. 101787)

RG-100L
(From ser. No. 101823)

RG-125
(From ser. No. 0125037)

LAPIS SERVICES INC
(219)-464-9131

O STRUCTIONS

Machine Model, Serial No., Unit No., Index No., Drawing No.,
ty.

	Parts Name	Type	Q'ty
	O-ring	1BP22	1
.4401531	Pressure spring		1

Amada Support, Rebuilds,
Sales and Fanuc Control Upgrade
AMADA®
AUTHORIZED CNC SYSTEM INTEGRATOR
FANUC

PARTS CLASSIFICATION

1. Expendable parts

2. Parts requiring periodic replacement to ensure optimum machine performance.

3. Parts requiring replacement due to damage caused by incorrect operation or maintenance

LAPIS SERVICES INC
(219)-464-9131

AUTHORIZED CNC SYSTEM INTEGRATOR
FANUC

Amada Support, Rebuilds,
Sales and Fanuc Control Upgrade

CONTENTS

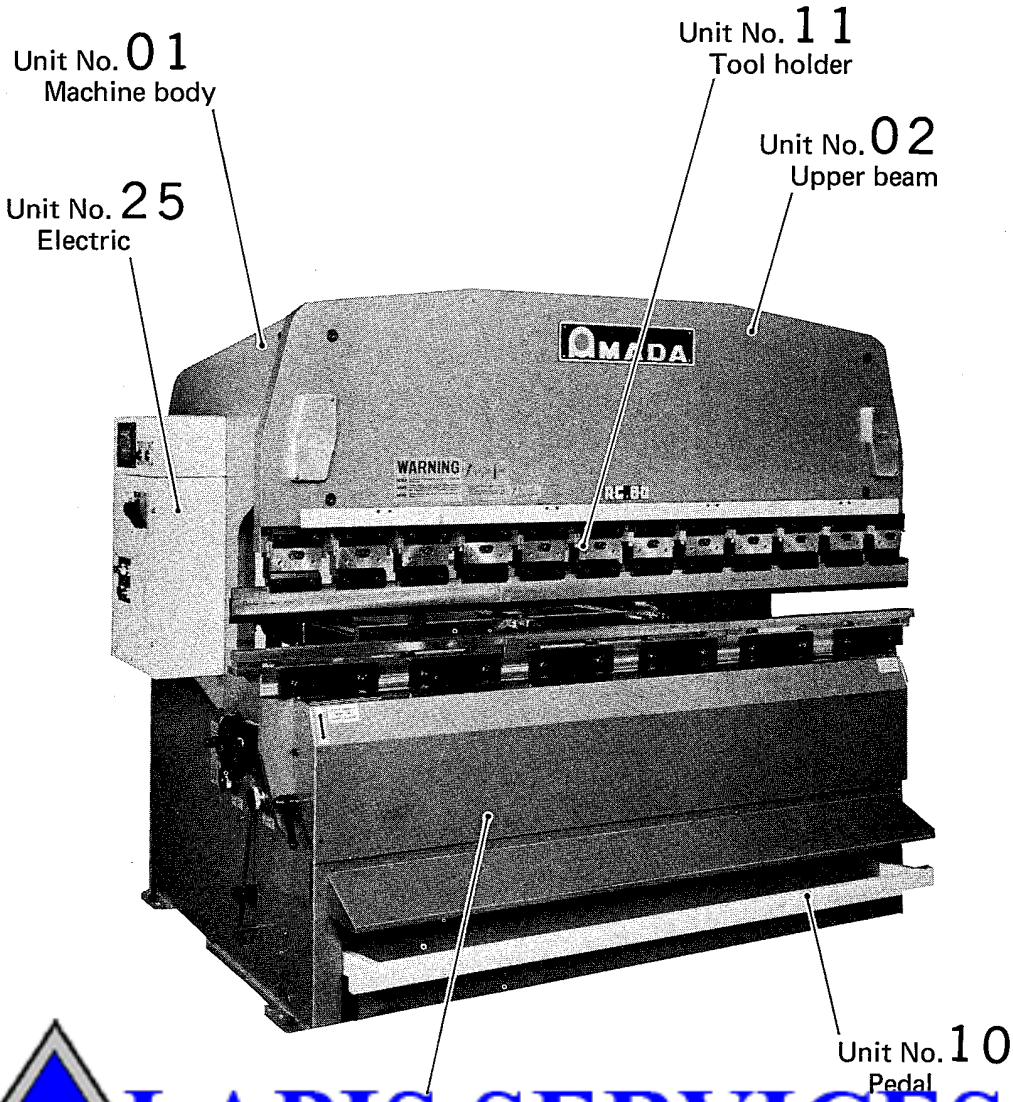

LAPIS SERVICES INC
(219)-464-9131
AUTHORIZED CNC SYSTEM INTEGRATOR
FANUC
Amada Support, Rebuilds,
Sales and Fanuc Control Upgrade

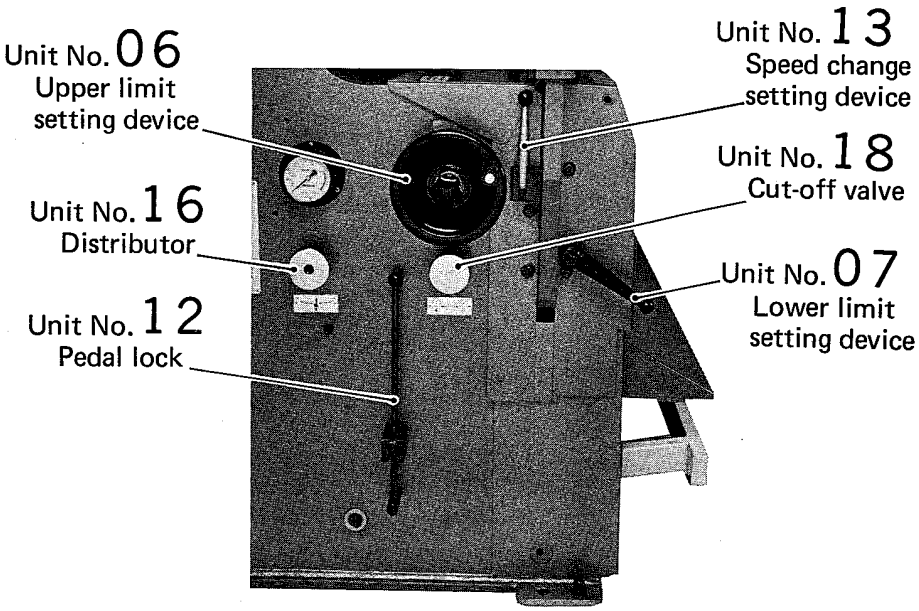

LAPIS SERVICES INC
(219)-464-9131
Amada Support, Rebuilds,
Sales and Fanuc Control Upgrade
AUTHORIZED CNC SYSTEM INTEGRATOR
FANUC

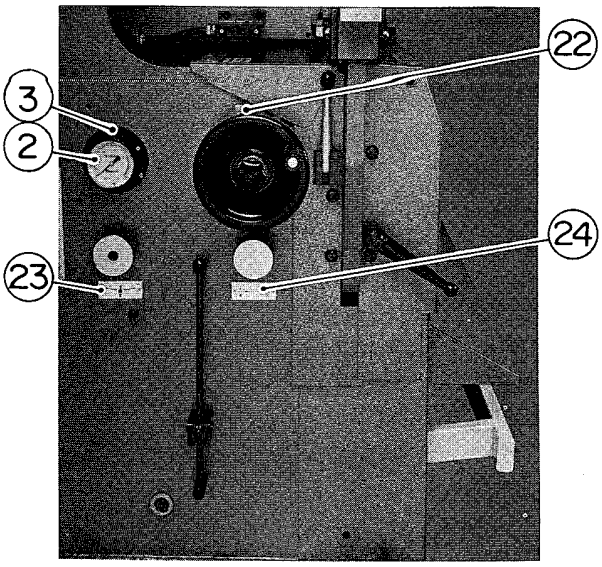

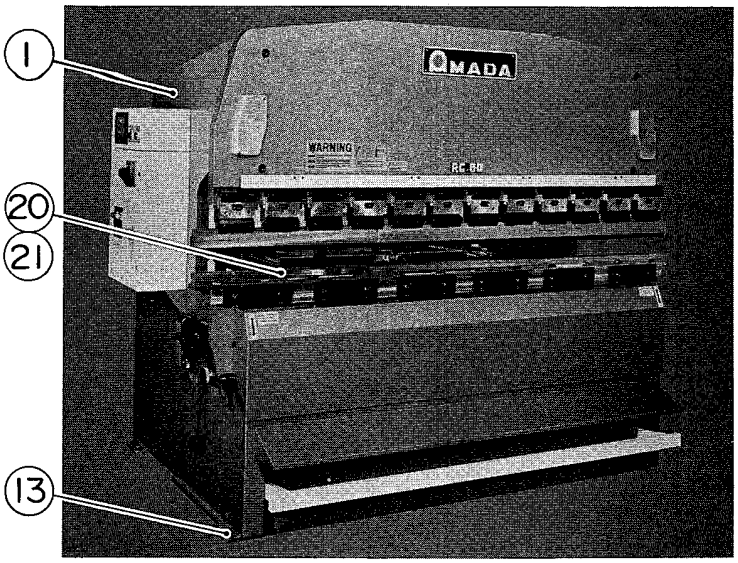

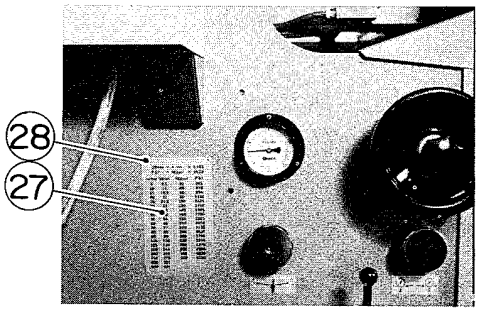

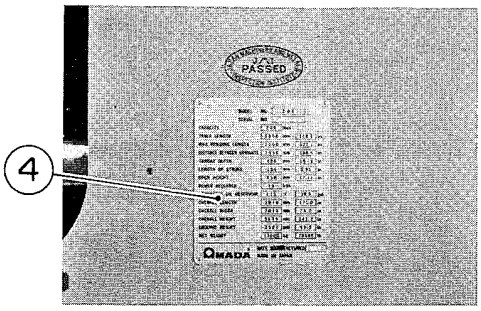

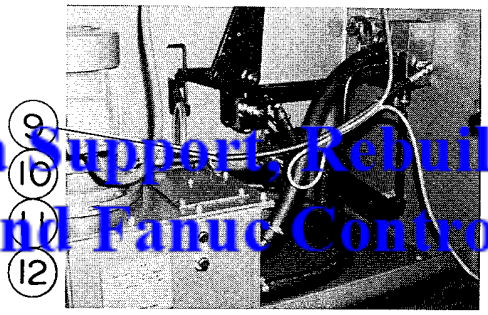

LAPIS SERVICES INC
(219)-464-9131
Amada Support, Rebuilds,
Sales and Fanuc Control Upgrade
AUTHORIZED CNC SYSTEM INTEGRATOR
FANUC

Index No.	Drawing No.	Parts Name	Type	Q'ty										Class	Note
				25	35S	50S	50	80S	80	100S	100	100L	125		
1	4124010	Frame		1	–	–	–	–	–	–	–	–	–		
1	4124011	Frame		–	1	–	–	–	–	–	–	–	–		
1	4124012	Frame		–	–	1	–	–	–	–	–	–	–		
1	4124013	Frame		–	–	–	1	–	–	–	–	–	–		
1	4124014	Frame		–	–	–	–	1	–	–	–	–	–		
1	4124015	Frame		–	–	–	–	–	1	–	–	–	–		
1	4124016	Frame		–	–	–	–	–	–	1	–	–	–		
1	4124017	Frame		–	–	–	–	–	–	–	1	–	–		
1	4124018	Frame		–	–	–	–	–	–	–	–	1	–		
1	4124019	Frame		–	–	–	–	–	–	–	–	–	1		
2	4096577	Pressure gauge		–	–	–	–	–	–	–	–	–	–	3	
2	4096578	Pressure gauge		–	–	–	–	–	–	–	–	–	–	3	
2	4124561	Pressure gauge		–	–	1	–	–	–	–	–	–	–	3	
2	4095987	Pressure gauge		–	–	–	–	–	–	–	–	–	–	3	
2	4095988	Pressure gauge		–	–	–	–	1	1	–	–	–	–	3	
2	4096579	Pressure gauge		–	–	–	–	–	–	1	1	1	–	3	
2	4097107	Pressure gau		–	–	–	–	–	–	–	–	–	1	3	
3		Pan head		3	3	3	3	3	3	3	3	3	3		
4	4124571	Serial		1	–	–	–	–	–	–	–	–	–		
4	4124572	Seri		–	1	–	–	–	–	–	–	–	–		
4	4124573	Serial plate		–	–	1	–	–	–	–	–	–	–		
4	4124574	Serial plate		–	–	–	–	–	–	–	–	–	–		
4	4124575	Serial plate		–	–	–	–	1	–	–	–	–	–		
4	4124576	Serial plate		–	–	–	–	–	–	–	–	–	–		
4	4124577	Serial plate		–	–	–	–	–	–	1	–	–	–		
4	4124578	Serial plate		–	–	–	–	–	–	–	1	–	–		
4	4124579	Serial plate		–	–	–	–	–	–	–	–	1	–		
4	4124580	Serial plate		–	–	–	–	–	–	–	–	–	1		

LAPIS SERVICES INC
(219)-464-9131
Amada Support, Rebuilds,
Sales and Fanuc Control Upgrade
AUTHORIZED CNC SYSTEM INTEGRATOR
FANUC

Index No.	Drawing No.	Parts Name	Type	Q'ty										Class	Note
				25	35S	50S	50	80S	80	100S	100	100L	125		
5	51.28067.1a	Stud bolt		6	6	–	6	6	10	10	10	10	–		
5	385363	Stud bolt		–	–	6	–	–	–	–	–	–	10		
6		Nut (with lock)	M16 type 1	6	6	6	6	6	10	10	10	10	10		
7		Set screw (flat end)	M16 x 50	3	3	–	3	3	5	–	–	–	–		
7		Set screw (flat end)	M16 x 80	–	–	3	–	–	–	5	5	5	5		
8		Nut	M16 type 2	3	3	3	3	3	5	5	5	5	5		
9	51.48025.1b	Support screw		1	1	–	2	2	2	2	2	2	–		
10	561741a	Eye bolt		1	1	–	–	–	–	–	–	–	–		
11		Nut	M12 type 2	3	3	–	6	6	6	6	6	6	–		
12		Lock washer	M12	2	2	–	–	–	–	–	–	–	–		
12		Spring washer	12	–	–	–	4	–	2	2	2	2	–		
13		Set screw (dog end)	40	3	3	4	4	4	4	4	4	4	4		
14		Bolt (tank)	5	4	4	–	–	–	–	–	–	–	–		
14		Bolt (tank)		–	–	–	–	8	–	16	–	16	–		
15		Washer (tank)		4	4	–	–	–	–	–	–	–	–		
15		Spring washer (		–	–	–	8	8	8	16	16	16	–		
16		Cap screw (		2	2	–	–	–	–	–	–	–	–		
17		Cap screw		3	3	3	3	3	3	–	–	–	–		
17		Cap sc		–	–	–	–	–	–	3	3	3	–		
17		Car		–	–	–	–	–	–	–	–	–	3		
18	57.80000.0	S		4	4	4	4	4	4	4	4	4	4		
19	57.85000.0	Work stopper		2	2	2	2	2	2	2	2	2	2		
20	57.86003.0	Die holder (L)		1	1	1	2	2	3	3	4	5	4	3	
21	57.86004.0	Die holder (S		1	1	1	1	1	1	1	1	1	3		
22	4044747	Legend plate (		1	1	1	1	1	1	1	1	1	1		
23	4044748	Legend plate (		1	1	1	1	1	1	1	1	1	1		
24	4044749	Legend plate (Cu		1	1	1	1	1	1	1	1	1	1		
25	4095658b	Bending chart (metr		1	1	1	1	1	1	1	1	1	1		

LAPIS SERVICES INC
(219)-464-9131
Amada Support, Rebuilds,
Sales and Fanuc Control Upgrade
AUTHORIZED CNC SYSTEM INTEGRATOR
FANUC

Index No.	Drawing No.	Parts Name	Type	Q'ty										Class	Note
				25	35S	50S	50	80S	80	100S	100	100L	125		
26	4095659b	Bending chart (imperial)		1	1	1	1	1	1	1	1	1	1		
27	4095660	Conversion table		1	1	1	1	1	1	1	1	1	1		
28		Screw rivet	$1.8^{\phi} \times 4.8$	18	18	18	18	18	18	18	18	18	18		

LAPIS SERVICES INC
(219)-464-9131
AUTHORIZED CNC SYSTEM FANUC INTEGRATOR
Amada Support, Rebuilds,
Sales and Fanuc Control Upgrade

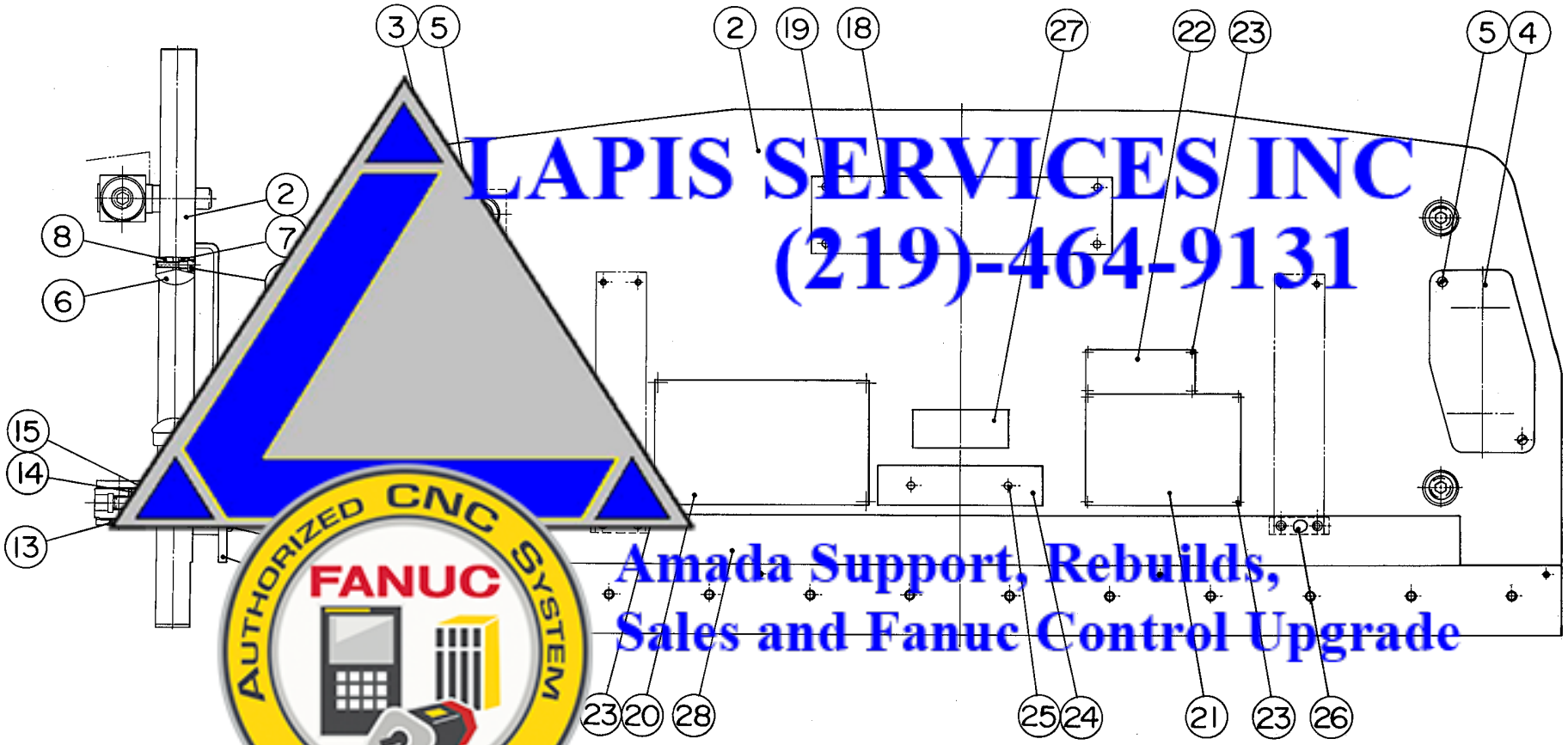

LAPIS SERVICES INC
(219)-464-9131

Amada Support, Rebuilds, Sales and Fanuc Control Upgrade

AUTHORIZED CNC SYSTEM INTEGRATOR FANUC

Index No.	Drawing No.	Parts Name	Type	Q'ty										Class	Note
				25	35S	50S	50	80S	80	100S	100	100L	125		
1	4124020	Upper beam ass'y		1	–	–	–	–	–	–	–	–	–		
1	4124021	Upper beam ass'y		–	1	–	–	–	–	–	–	–	–		
1	4124022	Upper beam ass'y		–	–	1	–	–	–	–	–	–	–		
1	4124023	Upper beam ass'y		–	–	–	1	–	–	–	–	–	–		
1	4124024	Upper beam ass'y		–	–	–	–	1	–	–	–	–	–		
1	4124025	Upper beam ass'y		–	–	–	–	–	1	–	–	–	–		
1	4124026	Upper beam ass'y		–	–	–	–	–	–	1	–	–	–		
1	4124027	Upper beam ass'y		–	–	–	–	–	–	–	1	–	–		
1	4124028	Upper beam ass'y		–	–	–	–	–	–	–	–	1	–		
1	4124029	Upper beam ass'y		–	–	–	–	–	–	–	–	–	1		
2	4124040~50	Upper beam		–	–	–	–	–	–	–	–	–	–		
2	4124051~61	Upper beam		–	–	–	–	–	–	–	–	–	–		
2	4124062~72	Upper beam		–	–	1	–	–	–	–	–	–	–		
2	4124073~83	Upper beam		–	–	–	–	–	–	–	–	–	–		
2	4124084~94	Upper beam		–	–	–	–	1	–	–	–	–	–		
2	4124095~105	Upper beam		–	–	–	–	–	1	–	–	–	–		
2	4124106~19	Upper beam		–	–	–	–	–	–	1	–	–	–		
2	4124120~33	Upper be		–	–	–	–	–	–	–	1	–	–		
2	4124134~47	Upper		–	–	–	–	–	–	–	–	1	–		
2	4124148~61	Up		–	–	–	–	–	–	–	–	–	1		
3	51.27030.0	Cover (left)		1	1	–	–	–	–	–	–	–	–		
3	51.27035.0	Cover (left)		–	1	1	1	1	1	1	1	1	–		
3	51.27050.0	Cover (left)		–	–	–	–	–	–	–	–	–	1		
4	51.27031.0	Cover (right)		1	–	–	–	–	–	–	–	–	–		
4	51.27036.0	Cover (right)		–	–	1	1	1	1	1	1	1	–		
4	51.27051.0	Cover (right)		–	–	–	–	–	–	–	–	–	1		
5		Countersink hea		4	4	–	–	–	–	–	–	–	–		
5		Countersink head ma		–	–	4	4	4	4	4	4	4	–		

LAPIS SERVICES INC
(219)-464-9131
Amada Support, Rebuilds,
Sales and Fanuc Control Upgrade
AUTHORIZED CNC SYSTEM INTEGRATOR
FANUC

Index No.	Drawing No.	Parts Name	Type	Q'ty										Class	Note
				25	35S	50S	50	80S	80	100S	100	100L	125		
5		Countersink head machine screw	M8 x 35	–	–	–	–	–	–	–	–	–	4		
6	51.46317.1a	Lock piece		2	2	2	2	–	–	–	–	–	–		
6	51.46309.2	Lock piece		–	–	–	–	2	2	2	2	2	2		
7	51.46318.1	Lock piece		2	2	2	2	–	–	–	–	–	–		
7	51.46313.2a	Lock piece		–	–	–	–	2	2	2	2	2	2		
8	51.46319.1	Lock piece		2	2	2	2	–	–	–	–	–	–		
8	51.46314.1a	Lock piece		–	–	–	–	2	2	2	2	2	2		
9		Cap screw	M8 x 35	2	2	2	2	–	–	–	–	–	–		
9		Cap screw	M10 x 45	–	–	–	–	2	2	2	2	2	2		
10	51.46316.2	Adjusting piece		4	4	4	4	–	–	–	–	–	–		
10	51.46315.2	Adjusting piece		–	–	–	–	–	4	4	4	4	4		
11	4120676	Washer		4	4	4	4	4	4	4	4	4	4		
12		Cap screw	0	4	4	4	4	4	4	–	–	–	–		
12		Cap screw		–	–	–	–	–	–	4	4	4	4		
13	4120195	Support block		4	4	–	–	–	–	–	–	–	–		
13	4120194	Support block		–	–	4	4	4	4	4	4	4	4		
14	51.28056.1	Adjusting sc		4	4	4	4	4	4	4	4	4	4		
15	51.46312.0	Spherical		4	4	4	4	4	4	4	4	4	4		
16	51.45042.0	Suppo		4	4	4	4	4	4	4	4	4	4		
17		Ca		4	4	4	4	–	–	–	–	–	–		
17		Cap screw		–	–	–	–	4	4	4	4	4	4		
18	357035	Amada plate		1	–	–	–	–	–	–	–	–	–		
18	355081	Amada plate		–	–	–	1	1	1	1	1	1	1		
19		Countersink h		2	2	2	2	2	2	2	2	2	2		
20	4095870	Warning plate		1	1	1	1	1	1	1	1	1	1		
21	4044752a	Caution plate		1	1	1	1	1	1	1	1	1	1		
22	4044750	Caution plate		1	1	1	1	1	1	1	1	1	1		
23		Screw rivet		12	12	12	12	12	12	12	12	12	12		

LAPIS SERVICES INC
(219)-464-9131
Amada Support, Rebuilds,
Sales and Fanuc Control Upgrade
AUTHORIZED CNC SYSTEM INTEGRATOR
FANUC

Index No.	Drawing No.	Parts Name	Type	Q'ty										Class	Note
				25	35S	50S	50	80S	80	100S	100	100L	125		
24	51.46018.0	Model plate		1	–	–	–	–	–	–	–	–	–		
24	51.46020.0	Model plate		–	1	–	–	–	–	–	–	–	–		
24	51.46021.0	Model plate		–	–	1	1	–	–	–	–	–	–		
24	51.46022.0	Model plate		–	–	–	–	1	1	–	–	–	–		
24	51.46030.0	Model plate		–	–	–	–	–	–	1	1	1	–		
24	385205	Model plate		–	–	–	–	–	–	–	–	–	1		
25		Countersink head rivet	4^{ϕ} x 12	2	2	2	2	2	2	2	2	2	2		
26	4098687a	Spacer		2	2	2	2	2	2	2	2	2	2		
27	382173	Sticker (1.2M)		–	1	1	–	–	–	–	–	–	–		
27	380515	Sticker (2M)		–	–	–	–	1	–	–	–	–	–		
27	383638	Sticker (2.5M)		–	–	–	–	–	–	1	–	–	–		
27	380513	Sticker (4M)		–	–	–	–	–	–	–	–	1	–		
28	4098688	Plate		1	1	1	–	–	–	–	–	–	–		
28	4098689	Plate		–	–	–	–	–	–	–	–	2	–		
28	4098690	Plate		–	–	–	–	1	1	1	–	–	–		
28	4098691	Plate		–	–	–	–	–	–	–	2	–	1		
29		Cap screw		4	4	4	8	8	8	8	8	8	8		

LAPIS SERVICES INC
(219)-464-9131
AUTHORIZED CNC SYSTEM FANUC INTEGRATOR
Amada Support, Rebuilds,
Sales and Fanuc Control Upgrade

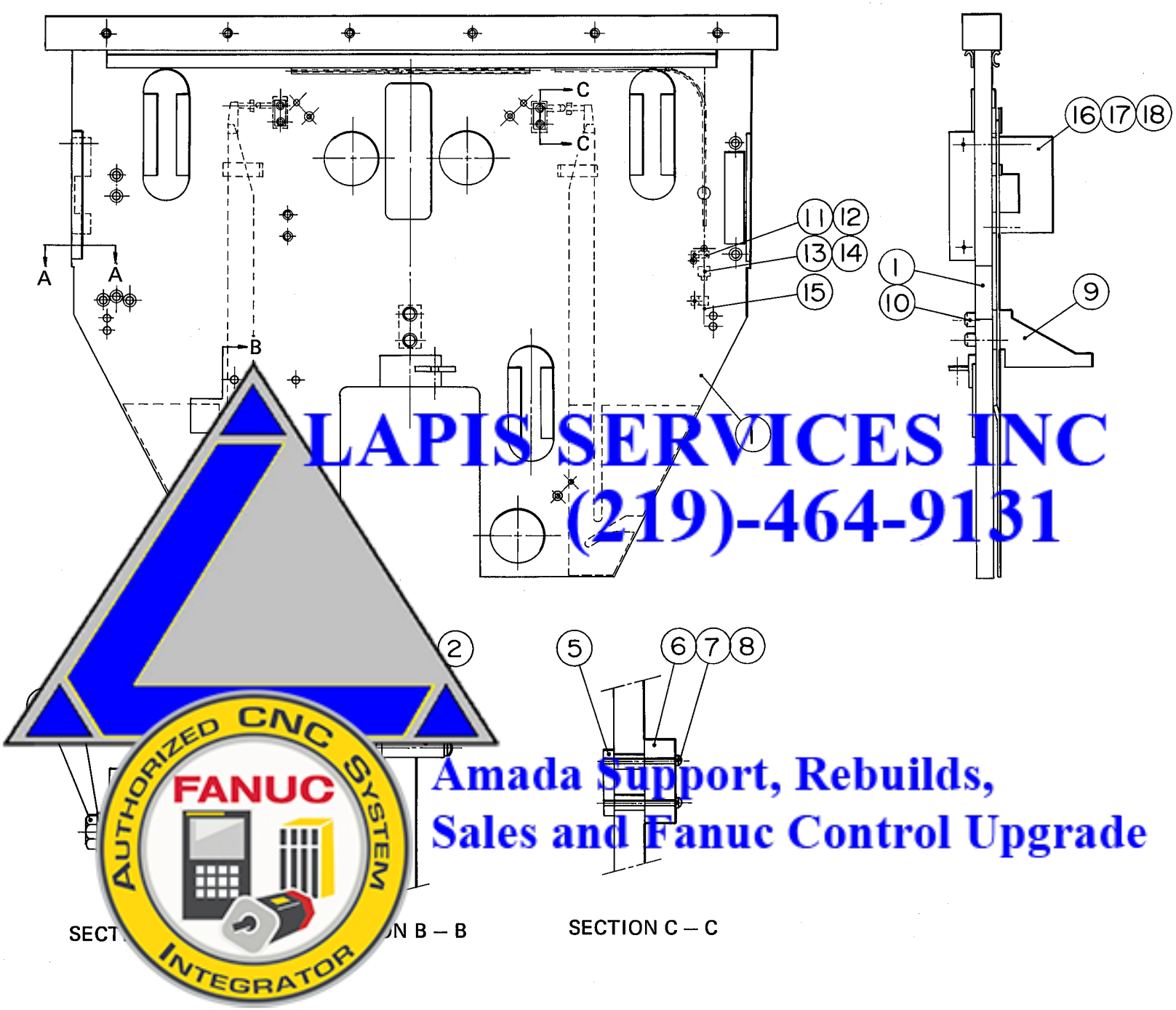

LAPIS SERVICES INC
(219)-464-9131
Amada Support, Rebuilds,
Sales and Fanuc Control Upgrade
AUTHORIZED CNC SYSTEM INTEGRATOR
FANUC

Index No.	Drawing No.	Parts Name	Type	Q'ty										Class	Note
				25	35S	50S	50	80S	80	100S	100	100L	125		
1	4122660a	Lower beam		1	1	–	–	–	–	–	–	–	–		
1	4123090b	Lower beam		–	–	1	–	–	–	–	–	–	–		
1	4040787e	Lower beam		–	–	–	1	1	–	–	–	–	–		
1	4041552e	Lower beam		–	–	–	–	–	1	–	–	–	–		
1	4042062g	Lower beam		–	–	–	–	–	–	1	–	–	–		
1	4042475g	Lower beam		–	–	–	–	–	–	–	1	–	–		
1	4042763f	Lower beam		–	–	–	–	–	–	–	–	1	–		
1	4043722d	Lower beam		–	–	–	–	–	–	–	–	–	1		
2		Grooved pin	BX-12$^{\phi}$ x 40	2	2	2	2	2	2	2	2	2	2		
3		Bolt	M10 x 20	4	4	4	8	8	8	8	8	8	8		
4		Washer	0 ype 2	[illegible]	[illegible]	[illegible]	[illegible]	[illegible]	8	8	8	8	8		
5	51.29009.0b	L.S. setting plate		[illegible]	[illegible]	[illegible]	2	[illegible]	2	2	2	2	2		
6		Limit switch	5-T4-J	2	2	2	2	2	2	2	2	2	2	3	
7		Pan head machine scr		4	4	–	4	4	–	–	–	–	–		
7		Pan head machine		–	–	4	–	–	4	4	4	4	–		
7		Pan head machi		–	–	–	–	–	–	–	–	–	4		
8		Spring washe		4	4	4	4	4	4	4	4	4	4		
9	4095635a	Bracket		1	1	–	1	1	–	–	–	–	–		
9	4120843	Bracke		–	–	1	–	–	–	–	–	–	–		
9	4095636a	Brac		–	–	–	–	–	1	–	–	–	–		
9	4096621	Bracket		–	–	–	–	–	–	1	1	1	–		
9	4097126	Bracket		–	–	–	–	–	–	–	–	–	1		
10		Cap screw		2	2	–	–	–	–	–	–	–	–		
10		Cap screw		–	–	2	–	–	–	2	2	2	–		
10		Cap screw		–	–	–	2	2	–	–	–	–	–		
10		Cap screw		–	–	–	–	–	2	–	–	–	–		
10		Cap screw		–	–	–	–	–	–	–	–	–	2		
11		Saddle		2	2	2	2	2	2	2	2	2	2		

LAPIS SERVICES INC
(219)-464-9131
Amada Support, Rebuilds,
Sales and Fanuc Control Upgrade
AUTHORIZED CNC SYSTEM INTEGRATOR FANUC

Index No.	Drawing No.	Parts Name	Type	Q'ty										Class	Note
				25	35S	50S	50	80S	80	100S	100	100L	125		
12		Pan head machine screw	M5 × 8	2	2	2	2	2	2	2	2	2	2		
13		Plug	1-480700-1	1	1	1	1	1	1	1	1	1	1		
14		Receptacle	1-480701-1	1	1	1	1	1	1	1	1	1	1		
15		Cable	1.25 mm² × 3750ℓ	1	1	1	–	–	–	–	–	–	–		
15		Cable	1.25 mm² × 4500ℓ	–	–	–	1	1	–	–	–	–	–		
15		Cable	1.25 mm² × 7500ℓ	–	–	–	–	–	1	–	–	–	–		
15		Cable	1.25 mm² × 9000ℓ	–	–	–	–	–	–	1	1	–	1		
15		Cable	1.25 mm² × 10500ℓ	–	–	–	–	–	–	–	–	1	–		
16	4041781b	Cover (left)		1	1	–	–	–	–	–	–	–	–		
16	4124267a	Cover (left)		–	–	1	–	–	–	–	–	–	–		
16	4124536	Side plate (left)		–	–	–	–	–	1	–	–	–	–		
16	4124537	Side plate (left)		–	–	–	–	–	–	1	–	–	–		
16	4124538	Side plate (left)		–	–	–	–	–	–	–	1	–	–		
16	4124540	Side plate (left)		–	–	–	–	–	–	–	–	1	–		
16	4124541	Side plate (left)		–	–	–	–	–	–	–	–	–	1		
17		Cap screw		2	2	2	–	–	–	–	–	–	–		
18	4090448	Side plate (ri		–	–	–	1	1	1	–	–	–	–		
18	4090451	Side plate		–	–	–	–	–	–	1	–	–	–		
18	4090454a	Side pl		–	–	–	–	–	–	–	1	–	–		
18	4090456	Side		–	–	–	–	–	–	–	–	1	–		
18	4090460a	Si		–	–	–	–	–	–	–	–	–	1		

LAPIS SERVICES INC
(219)-464-9131
Amada Support, Rebuilds,
Sales and Fanuc Control Upgrade
AUTHORIZED CNC SYSTEM INTEGRATOR
FANUC

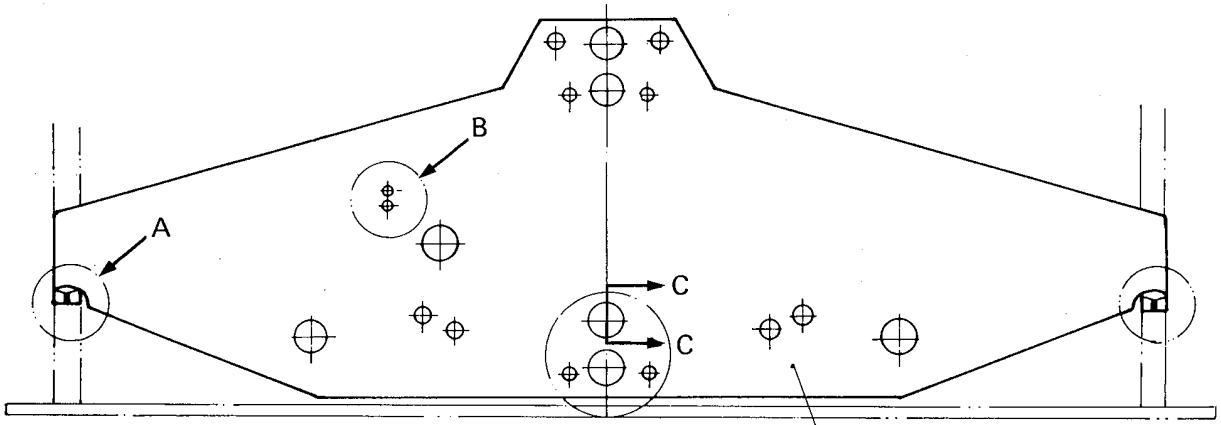

DETAIL B

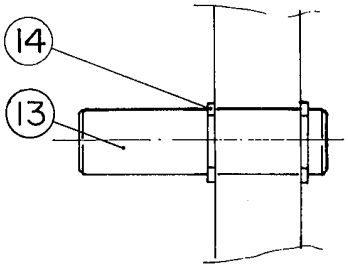

SECTION C – C

LAPIS SERVICES INC
(219)-464-9131
Amada Support, Rebuilds,
Sales and Fanuc Control Upgrade
AUTHORIZED CNC SYSTEM
FANUC
INTEGRATOR

Index No.	Drawing No.	Parts Name	Type	Q'ty										Class	Note
				25	35S	50S	50	80S	80	100S	100	100L	125		
1	4090465a	Support plate		1	1	–	–	–	–	–	–	–	–		
1	4098295a	Support plate		–	–	1	–	–	–	–	–	–	–		
1	4090469a	Support plate		–	–	–	1	–	–	–	–	–	–		
1	4090471a	Support plate		–	–	–	–	1	–	–	–	–	–		
1	4090473a	Support plate		–	–	–	–	–	1	–	–	–	–		
1	4041768b	Support plate		–	–	–	–	–	–	1	–	–	–		
1	4042378b	Support plate		–	–	–	–	–	–	–	1	–	–		
1	4042765b	Support plate		–	–	–	–	–	–	–	–	1	–		
1	4043726c	Support plate		–	–	–	–	–	–	–	–	–	1		
2	385218a	Spherical support		–	–	2	–	–	–	–	–	–	2		
2	51.46317.1a	Lock piece		–	–	–	2	–	–	–	–	–	–		
2	51.46314.1a	Lock piece		–	–	–	–	–	2	2	–	2	–		
3	51.46318.1	Lock piece		–	–	–	2	–	–	–	–	–	–		
3	51.46313.2	Lock piece		–	–	–	–	2	–	2	–	2	–		
4		Nut		2	2	–	–	–	–	–	–	–	–		
4	55.02714.3	Female screw		–	–	2	–	–	–	–	–	–	2		
4	51.46319.1	Lock piece		–	–	–	2	–	–	–	–	–	–		
4	51.46309.2a	Lock piec		–	–	–	–	2	2	2	2	2	–		
5	51.28060.1a	Adjusti		2	2	–	–	–	–	–	–	–	–		
5	55.02762.1a	Adj		–	–	2	–	–	–	–	–	–	2		
5		C		–	–	–	2	–	–	–	–	–	–		
5		Cap screw		–	–	–	–	2	2	2	2	2	–		
6	51.15127.2b	Block		1	1	–	1	1	1	–	–	–	–		
6	4098297	Block		–	1	–	–	–	–	–	–	–	–		
6	385444a	Block		–	–	–	–	–	–	1	1	1	–		
6	387832a	Block		–	–	–	–	–	–	–	–	–	1		
7		Bolt		1	1	1	1	1	1	2	2	2	2		
8		Cone disk spring		44	44	44	44	44	44	88	88	88	88		

LAPIS SERVICES INC
(219)-464-9131
Amada Support, Rebuilds,
Sales and Fanuc Control Upgrade
AUTHORIZED CNC SYSTEM INTEGRATOR
FANUC

Index No.	Drawing No.	Parts Name	Type	Q'ty										Class	Note
				25	35S	50S	50	80S	80	100S	100	100L	125		
9		Nut	M12 type 3	1	1	1	1	1	1	2	2	2	2		
10		Nut	M12 type 2	1	1	1	1	1	1	2	2	2	2		
11		Cap screw	M16 x 35	2	2	–	–	–	–	–	–	–	–		
11		Cap screw	M16 x 55	–	–	2	–	–	–	–	–	–	–		
11		Cap screw	M16 x 45	–	–	–	2	2	2	–	–	–	–		
11		Cap screw	M16 x 50	–	–	–	–	–	–	4	4	4	–		
11		Cap screw	M16 x 60	–	–	–	–	–	–	–	–	–	4		
12		Lock washer	M16	2	2	2	2	2	2	–	–	–	–		
12		Spring washer	M16	–	–	–	–	–	–	4	4	4	4		
13	51.11057.0	Shaft		–	–	–	–	–	–	4	4	4	–		
14		Snap ring	TW 20	–	–	–	–	–	–	8	8	8	–		
15		Set screw (cup end)	16	–	–	2	–	–	–	–	–	–	2		

LAPIS SERVICES INC
(219)-464-9131
AUTHORIZED CNC SYSTEM FANUC INTEGRATOR
Amada Support, Rebuilds,
Sales and Fanuc Control Upgrade

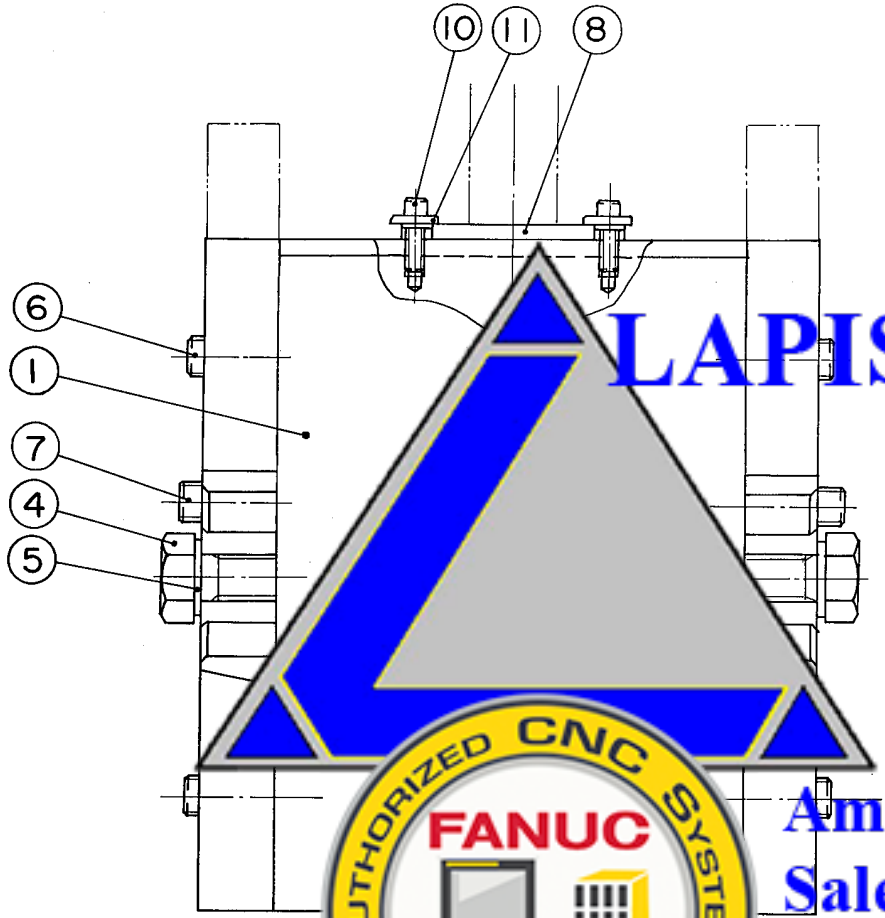

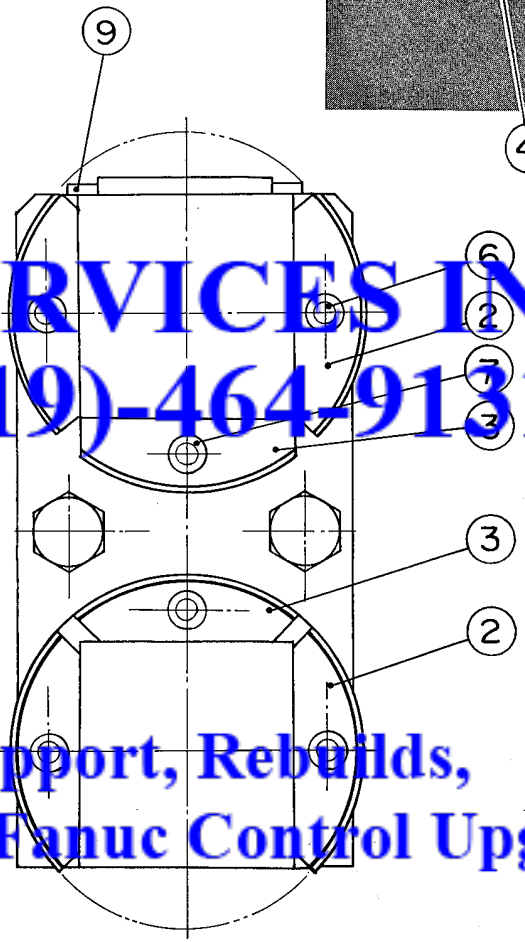

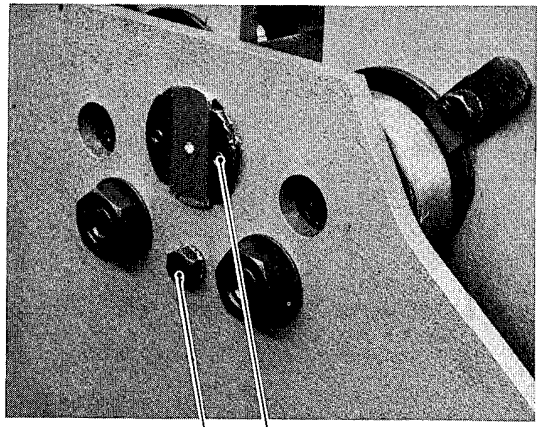

LAPIS SERVICES INC
(219)-464-9131

Amada Support, Rebuilds,
Sales and Fanuc Control Upgrade

Index No.	Drawing No.	Parts Name	Type	Q'ty										Class	Note
				25	35S	50S	50	80S	80	100S	100	100L	125		
1	51.24517	Guide post		1	1	–	1	1	1	–	–	–	–		
1	4098264a	Guide post		–	–	1	–	–	–	–	–	–	–		
1	4048588a	Guide post		–	–	–	–	–	–	1	1	1	–		
1	385368	Guide post		–	–	–	–	–	–	–	–	–	1		
2	51.46309.2	Lock piece		4	4	4	4	4	4	–	–	–	–		
2	51.46326.0b	Lock piece		–	–	–	–	–	–	10	10	10	10		
3	4048899	Lock piece		–	–	–	–	–	–	2	2	2	–		
4		Bolt	M16 x 45	2	2	2	2	2	2	4	4	4	–		
4		Bolt	M16 x 55	–	–	–	–	–	–	–	–	–	4		
5		Lock washer	M16	2	2	2	2	2	2	4	4	4	4		
6		Set screw (dog end)	M10 x 25	4	4	4	4	–	4	–	–	–	–		
6		Set screw (dog end)	M10 x 35	–	–	–	–	–	–	10	10	10	10		
7		Cap screw		–	–	–	–	–	–	2	2	2	–		
8	51.19035	Rubber cushion		1	1	1	1	–	–	–	–	–	–	3	
8	4010990	Rubber cushion		–	–	–	–	–	–	1	1	1	1	3	
9	386834a	Guide		–	–	–	–	–	–	1	1	1	1		
10		Cap screw		–	–	–	–	–	–	2	2	2	2		
11	4048900	Washer		–	–	–	–	–	–	2	2	2	–		
12	4095004	Space		–	–	–	–	–	–	2	2	2	2		

LAPIS SERVICES INC
(219)-464-9131
Amada Support, Rebuilds,
Sales and Fanuc Control Upgrade
AUTHORIZED CNC SYSTEM INTEGRATOR FANUC

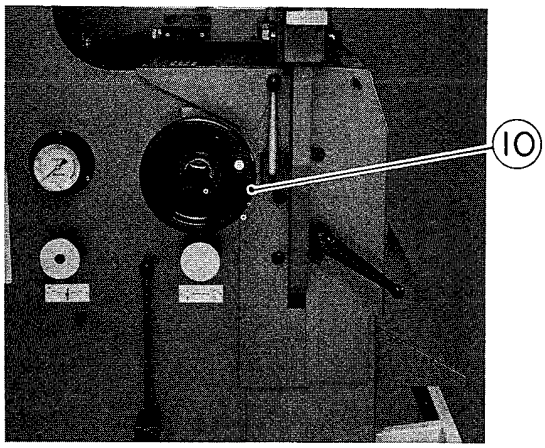

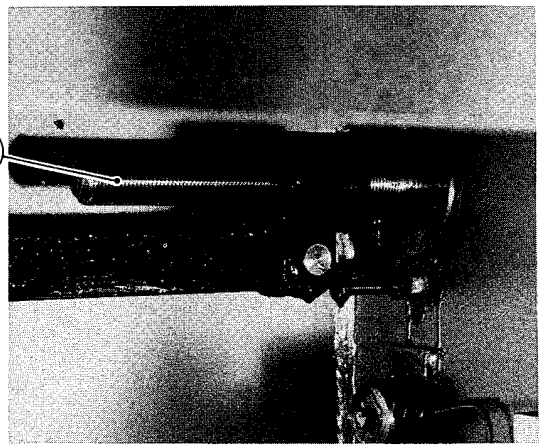

LAPIS SERVICES INC
(219)-464-9131
Amada Support, Rebuilds,
Sales and Fanuc Control Upgrade
AUTHORIZED CNC SYSTEM
FANUC
INTEGRATOR

Index No.	Drawing No.	Parts Name	Type	Q'ty										Class	Note
				25	35S	50S	50	80S	80	100S	100	100L	125		
1	4123978a	Upper limit setting handwheel ass'y		1	1	1	1	1	1	1	1	1	1		
2	4099871	Feed screw		1	1	1	1	1	1	1	1	1	1		
3		Ball bearing	6005ZZ	2	2	2	2	2	2	2	2	2	2		
4	4099872	Collar		1	1	1	1	1	1	1	1	1	1		
5	4099873	Pin		2	2	2	2	2	2	2	2	2	2		
6	4099874b	Bearing case		1	1	1	1	1	1	1	1	1	1		
7	4121313a	Washer		3	3	3	3	3	3	3	3	3	3		
8		Cap screw	M5 x 10	3	3	3	3	3	3	3	3	3	3		
9		Digital display unit	CIL-079 (inch)	1	1	1	1	1	1	1	1	1	1	3	
10	563811b	Handhweel		1	1	1	1	1	1	1	1	1	1		
11		Washer	M22 type 2	1	1	1	1	1	1	1	1	1	1		
12		Nut	type 3	1	1	1	1	1	1	1	1	1	1		
13	563813b	Lever		1	1	1	1	1	1	1	1	1	1	3	
14	383535a	Lock knob		1	1	1	1	1	1	1	1	1	1	3	
15	4099877	Retainer		1	1	1	1	1	1	1	1	1	1		
16		Cap screw		3	3	3	3	3	3	3	3	3	3		
17	4041599	Connectin		1	–	–	–	–	–	–	–	–	–		
17	4042098	Conne		–	1	–	–	–	–	–	–	–	–		
17	4040702	Con		–	–	1	1	–	–	–	–	–	–		
17	4041792	C		–	–	–	–	1	–	–	–	–	–		
17	4041556	Connecting bar		–	–	–	–	–	1	–	–	–	–		
17	4042266	Connecting ba		–	–	–	–	–	–	1	–	–	–		
17	4042471	Connecting b		–	–	–	–	–	–	–	1	–	1		
17	4042767	Connecting b		–	–	–	–	–	–	–	–	1	–		
18	51.11107.2a	Shaft		1	1	1	1	1	1	1	1	1	1		
19		Washer		2	2	2	2	2	2	2	2	2	2		
20		Snap ring		2	2	2	2	2	2	2	2	2	2		

LAPIS SERVICES INC
(219)-464-9131
Amada Support, Rebuilds,
Sales and Fanuc Control Upgrade
AUTHORIZED CNC SYSTEM INTEGRATOR
FANUC

Index No.	Drawing No.	Parts Name	Type	Q'ty										Class	Note
				25	35S	50S	50	80S	80	100S	100	100L	125		
21	51.18516.2	Carriage		1	1	1	1	1	1	1	1	1	1		
22		Bolt	M10 x 130	1	–	–	–	–	–	–	–	–	–		
22		Bolt	M10 x 110	–	1	1	1	1	–	–	–	–	–		
22		Bolt	M10 x 100	–	–	–	–	–	1	–	–	–	–		
22		Bolt	M10 x 75	–	–	–	–	–	–	1	1	1	1		
23		Nut	M10 type 2	1	1	1	1	1	1	1	1	1	1		
24	4099919	Spacer		1	–	–	–	–	–	–	–	–	–		
24	4099921	Spacer		–	1	–	–	–	–	–	–	–	–		
24	4099917	Spacer		–	–	1	1	–	–	–	–	–	–		
25	4040697	Lever		1	1	1	1	1	1	1	1	1	1		
26		DU bushing	20DU						1	1	1	1	1		
27		Snap ring		2	2	2	2	2	2	2	2	2	2		
28	4040703a	Lever ass'y		1	1	1	1	1	1	1	1	1	1		
29		DU bushing		2	2	2	2	2	2	2	2	2	2		
30		Snap ring		1	1	1	1	1	1	1	1	1	1		
31	51.44050.0	Spring plate		1	1	1	1	1	1	1	1	1	1		
32	4091384	Bracket		1	1	1	1	1	1	1	1	1	1		
33		Spring pin		2	2	2	2	2	2	2	2	2	2		
34	4091387a	Angle		1	1	1	1	1	1	1	1	1	1		
35		Cap		3	3	3	3	3	3	3	3	3	3		
36		W		1	1	1	1	1	1	1	1	1	1		
37		Digital display ur		1	1	1	1	1	1	1	1	1	1	3	

LAPIS SERVICES INC
(219)-464-9131
Amada Support, Rebuilds,
Sales and Fanuc Control Upgrade
AUTHORIZED CNC SYSTEM INTEGRATOR
FANUC

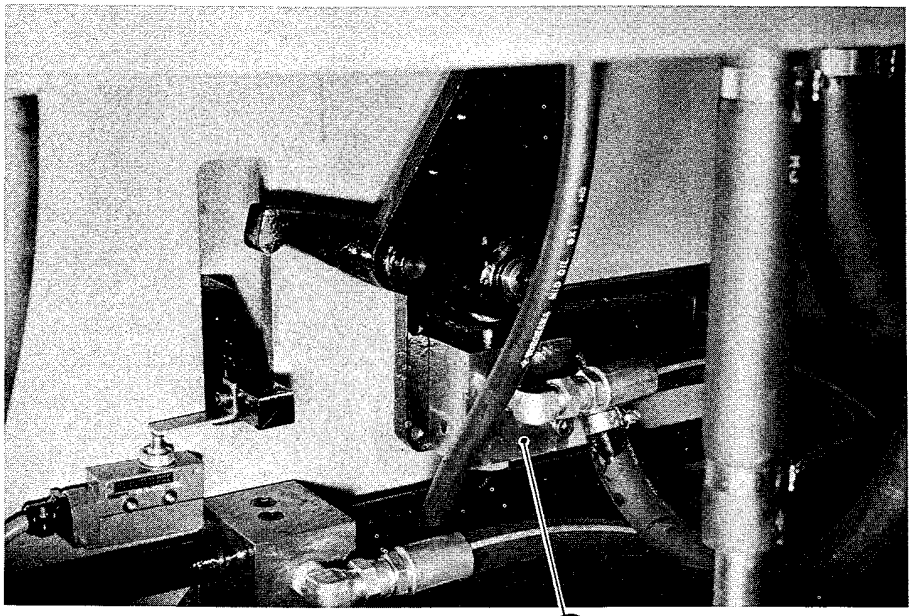

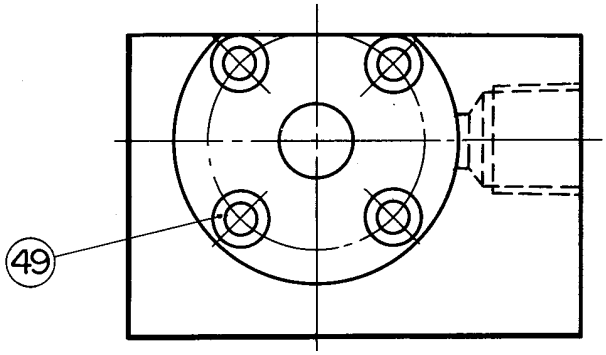

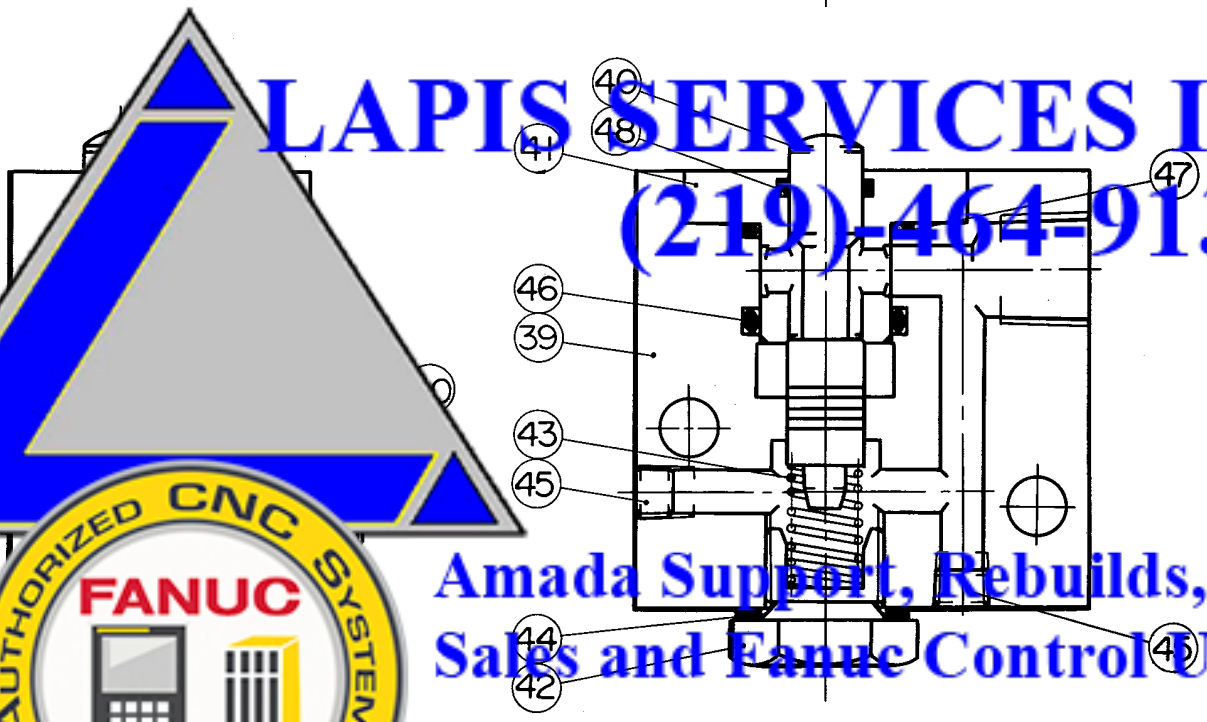

LAPIS SERVICES INC
(219)-464-9131
Amada Support, Rebuilds,
Sales and Fanuc Control Upgrade
AUTHORIZED CNC SYSTEM
FANUC
INTEGRATOR

Index No.	Drawing No.	Parts Name	Type	Q'ty										Class	Note
				25	35S	50S	50	80S	80	100S	100	100L	125		
38	4125420	Upper limit valve ass'y		1	1	1	1	1	1	1	1	1	1		
39	4122110	Valve body		1	1	1	1	1	1	1	1	1	1		
40	4125421	Spool		1	1	1	1	1	1	1	1	1	1		
41	4122112	Valve seat		1	1	1	1	1	1	1	1	1	1		
42	4044546a	Cap		1	1	1	1	1	1	1	1	1	1		
43	4044547a	Pressure spring		1	1	1	1	1	1	1	1	1	1	2	
44		Seal washer	WF-22	1	1	1	1	1	1	1	1	1	1	3	
45		Plug	PT 1/8''	2	2	2	2	2	2	2	2	2	2		
46		O-ring	1BP-25	1	1	1	1	1	1	1	1	1	1	1	
47		O-ring	1BP-28	1	1	1	1	1	1	1	1	1	1	1	
48		O-ring	AP-14	1	1	1	1	1	1	1	1	1	1	1	
49		Cap screw	0	4	4	4	4	4	4	4	4	4	4		
50		Cap screw	70	2	2	2	2	2	2	2	2	2	2		

LAPIS SERVICES INC
(219)-464-9131
Amada Support, Rebuilds,
Sales and Fanuc Control Upgrade
AUTHORIZED CNC SYSTEM INTEGRATOR
FANUC

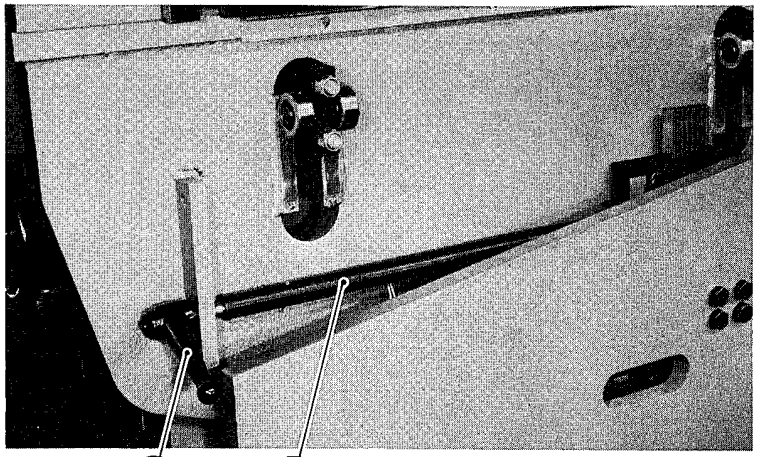

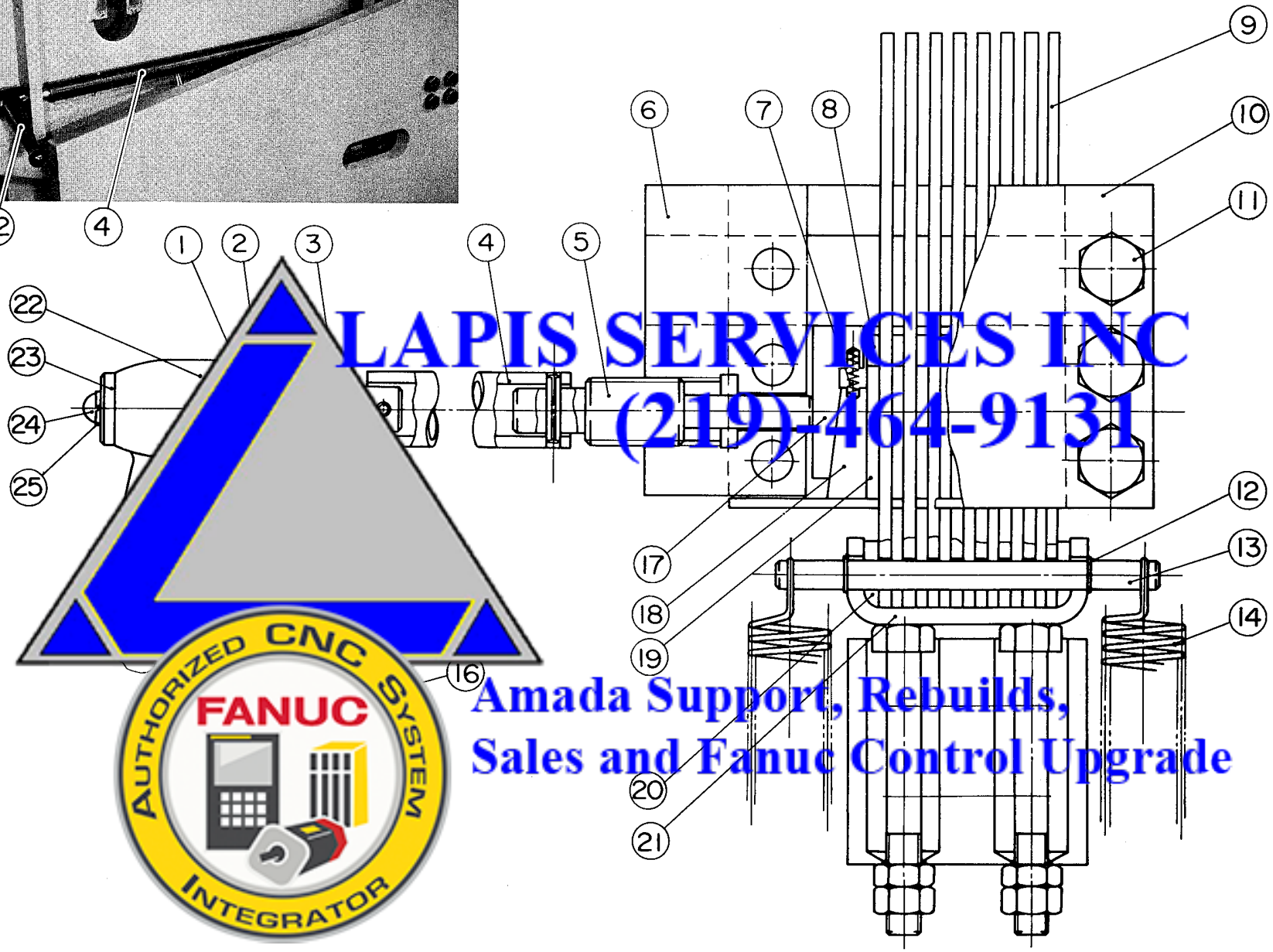

LAPIS SERVICES INC
(219)-464-9131
Amada Support, Rebuilds,
Sales and Fanuc Control Upgrade
AUTHORIZED CNC SYSTEM INTEGRATOR
FANUC

Index No.	Drawing No.	Parts Name	Type	Q'ty										Class	Note
				25	35S	50S	50	80S	80	100S	100	100L	125		
1		Spring pin	4^{ϕ} x 25	1	1	–	1	1	1	1	1	1	1		
1		Spring pin	4^{ϕ} x 20	–	–	1	–	–	–	–	–	–	–		
2	380397a	Collar		1	1	1	1	1	1	1	1	1	1		
3	380396b	Insert coupling		1	1	1	1	1	1	1	1	1	1		
4	380836	Shaft		1	1	–	–	–	–	–	–	–	–		
4	4098389	Shaft		–	–	1	–	–	–	–	–	–	–		
4	380836	Shaft		–	–	–	1	1	–	–	–	–	–		
4	380841	Shaft		–	–	–	–	–	1	1	–	–	–		
4	380851	Shaft		–	–	–	–	–	–	–	1	–	1		
4	380916c	Shaft		–	–	–	–	–	–	–	–	1	–		
5	51.28140.0	Screw		[illegible]	[illegible]	[illegible]	[illegible]	[illegible]	1	–	–	–	–		
5	381749	Screw		[illegible]	[illegible]	[illegible]	[illegible]	[illegible]	[illegible]	1	1	1	1		
6	51.15108.0	Block support		1	1	1	1	1	1	–	–	–	–		
6	385440	Block support		–	–	–	–	–	–	1	1	1	1		
7	381752	Spring		–	–	–	–	–	–	1	1	1	1	3	
8	51.57137.1b	Support		6	6	6	6	6	6	–	–	–	–		
8	51.57137	Support		–	–	–	–	–	–	9	9	9	9		
9	51.57563.0d	Plate		5	5	5	5	5	5	8	8	8	8		
10	51.15109.0	Block s[illegible]		1	1	1	1	1	1	–	–	–	–		
10	385441	Bloc[illegible]		–	–	–	–	–	–	1	1	1	1		
11		B[illegible]		4	4	4	4	4	4	–	–	–	–		
11	380259	Bolt		[illegible]	[illegible]	[illegible]	[illegible]	[illegible]	[illegible]	6	6	6	6		
12		Snap ring		2	2	2	2	2	2	2	2	2	2		
13	51.11112.0a	Pin		[illegible]	[illegible]	[illegible]	[illegible]	[illegible]	[illegible]	–	–	–	–		
13	380257	Pin		–	–	–	–	–	–	1	1	1	1		
14	51.44099.0	Spring		2	2	2	2	2	2	2	2	2	2		
15		Spring pin		2	2	2	2	2	2	–	–	–	–		
15		Spring pin		–	–	–	–	–	–	2	2	2	2		

LAPIS SERVICES INC
(219)-464-9131
Amada Support, Rebuilds,
Sales and Fanuc Control Upgrade
AUTHORIZED CNC SYSTEM INTEGRATOR
FANUC

Index No.	Drawing No.	Parts Name	Type	Q'ty										Class	Note
				25	35S	50S	50	80S	80	100S	100	100L	125		
16		Spring pin	3^{ϕ} x 28	2	2	2	2	2	2	1	1	1	1		
17	51.15126.0a	Support block		1	1	1	1	1	1	–	–	–	–		
17	381751	Support block		–	–	–	–	–	–	1	1	1	1		
18	381750	Support block		–	–	–	–	–	–	1	1	1	1		
19	51.57138.0	Friction plate		6	6	6	6	6	6	9	9	9	9		
20	563032	Rubber washer		2	2	2	2	2	2	2	2	2	2		
21	51.19057.0c	Support plate		1	1	1	1	1	1	–	–	–	–		
21	380258	Support plate		–	–	–	–	–	–	1	1	1	1		
22	383536	Lever		1	1	1	1	1	1	1	1	1	1		
23	564563	Washer		1	1	1	1	1	1	1	1	1	1		
24		Oval head machine screw	6 x 15	1	1	1	1	1	1	1	1	1	1		
25		Spring washer		1	1	1	1	1	1	1	1	1	1		

LAPIS SERVICES INC
(219)-464-9131
Amada Support, Rebuilds,
Sales and Fanuc Control Upgrade
AUTHORIZED CNC SYSTEM INTEGRATOR
FANUC

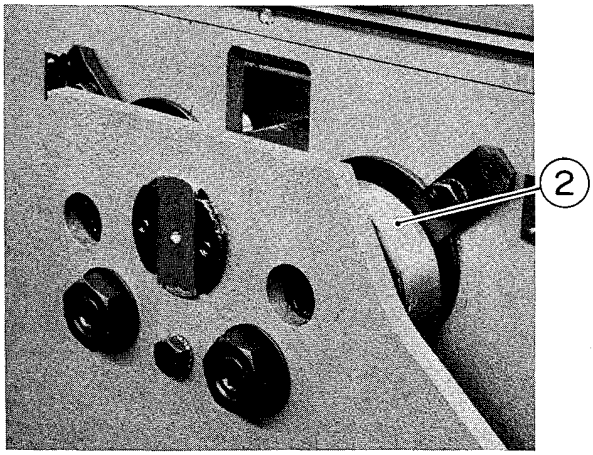

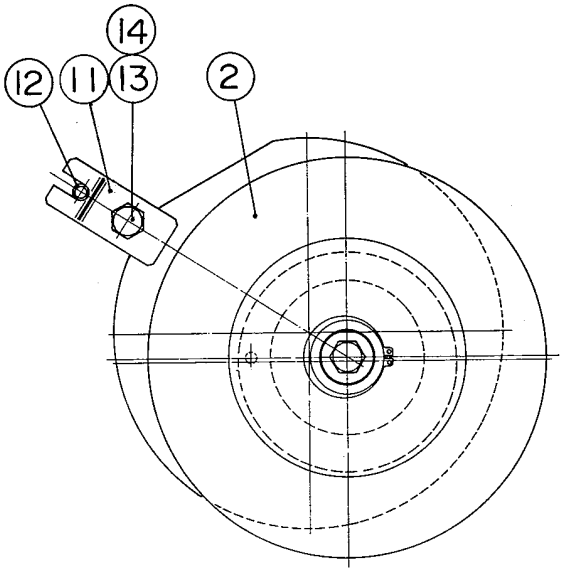

RG-25, 35S, 50, 80S, 80

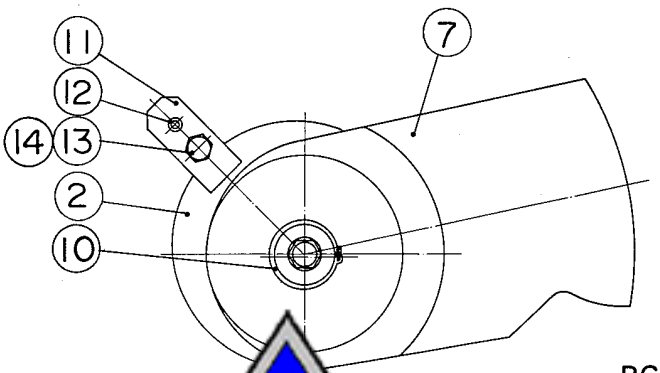

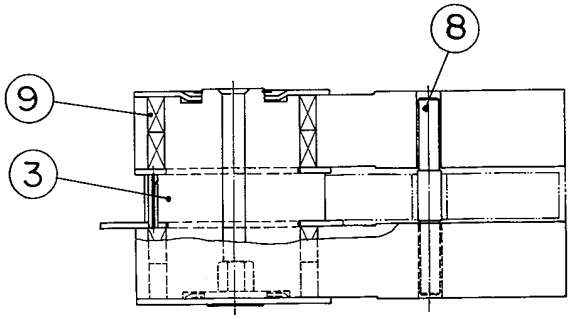

RG-100S, 100, 100I

LAPIS SERVICES INC
(219)-464-9131
Amada Support, Rebuilds,
Sales and Fanuc Control Upgrade
AUTHORIZED CNC SYSTEM
FANUC
INTEGRATOR

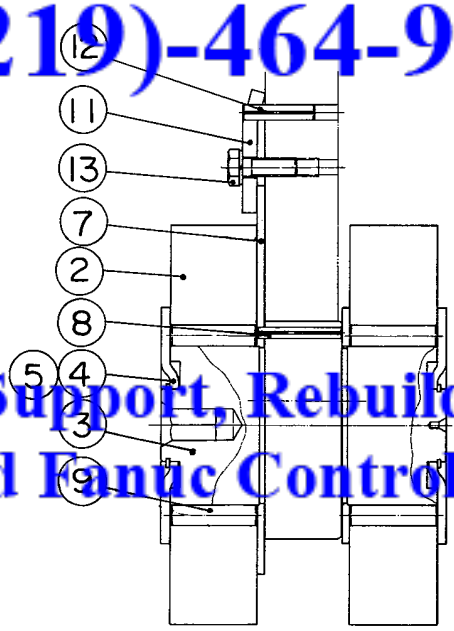

RG-125

Index No.	Drawing No.	Parts Name	Type	Q'ty										Class	Note
				25	35S	50S	50	80S	80	100S	100	100L	125		
1	4095914	Right-left guide roller ass'y		4	4	–	4	4	–	–	–	–	–		
1	4095913	Right-left guide roller ass'y		–	–	4	–	–	–	–	–	–	–		
1	4095915	Right-left guide roller ass'y		–	–	–	–	–	4	–	–	–	–		
1	4095916	Right-left guide roller ass'y		–	–	–	–	–	–	4	4	4	–		
1	4095917	Right-left guide roller ass'y		–	–	–	–	–	–	–	–	–	4		
2	51.60406.0	Guide roller ass'y		4	4	–	4	4	–	–	–	–	–	3	
2	51.60407a	Guide roller ass'y		–	–	4	–	–	–	–	–	–	–	3	
2	51.60408.0	Guide roller ass'y		–	–	–	–	–	4	–	–	–	–	3	
2	51.45062.0	Eccentric ring		–	–	–	–	–	–	4	4	4	–	3	
2	385221a	Roller		–	–	–	–	–	–	–	–	–	4	3	
3	51.27514.1d	Eccentric shaft		–	–	–	–	–	–	4	4	4	–	3	
3	385220	Eccentric shaft		–	–	–	–	–	–	–	–	–	4	3	
4	51.45063.0	Support plate		–	–	–	–	–	–	4	4	4	4		
5	51.45064.1c	Support plate		–	–	–	–	–	–	8	8	8	8		
6	51.11054.0	Shaft		–	–	–	–	–	–	4	4	4	–		
7	51.33032.0b	Sector		–	–	–	–	–	–	8	8	8	–		
7	385222b	Eccentric ri		–	–	–	–	–	–	–	–	–	4		
8		Spring pi		–	–	–	–	–	–	4	4	4	–		
8		Spring		–	–	–	–	–	–	–	–	–	4		
9		Nee		–	–	–	–	–	–	4	4	4	–		
9		Needle bearing		–	–	–	–	–	–	–	–	–	8		
10		Snap ring		–	–	–	–	–	–	8	8	8	8		
11	4095918	Clamper		4	4	4	4	4	4	4	4	4	4		
12		Spring pin		–	–	–	–	–	–	–	–	–	–		
12		Spring pin		–	–	–	–	–	–	4	4	4	–		
12		Spring pin		–	–	–	–	–	–	–	–	–	4		
13		Bolt		4	4	4	4	4	4	4	4	4	4		
14		Lock washer		4	4	4	4	4	4	4	4	4	4		

LAPIS SERVICES INC
(219)-464-9131
Amada Support, Rebuilds,
Sales and Fanuc Control Upgrade
AUTHORIZED CNC SYSTEM FANUC INTEGRATOR

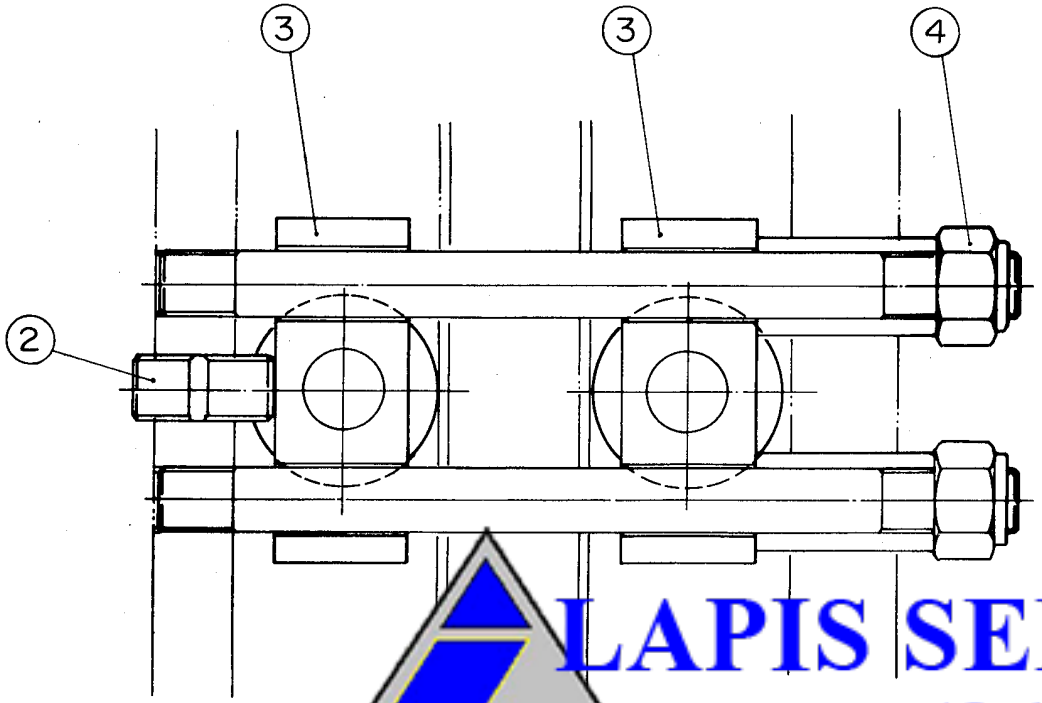

LAPIS SERVICES INC

(219)-464-9131

Amada Support, Rebuilds,
Sales and Fanuc Control Upgrade

Index No.	Drawing No.	Parts Name	Type	Q'ty										Class	Note
				25	35S	50S	50	80S	80	100S	100	100L	125		
1	51.88105.0	Fore-aft guide roller ass'y		3	3	3	3	3	5	5	5	5	5	3	
2	55.02969.2	Set screw		3	3	3	3	3	5	5	5	5	5		
3	51.15023	Block support		3	3	3	3	3	5	5	5	5	5		
4		Nut (with lock)	M16	6	6	6	6	6	10	10	10	10	10		
5	51.60401	Bogie roller		6	6	6	6	6	10	10	10	10	10	3	

LAPIS SERVICES INC
(219)-464-9131
AUTHORIZED CNC SYSTEM INTEGRATOR FANUC
Amada Support, Rebuilds,
Sales and Fanuc Control Upgrade

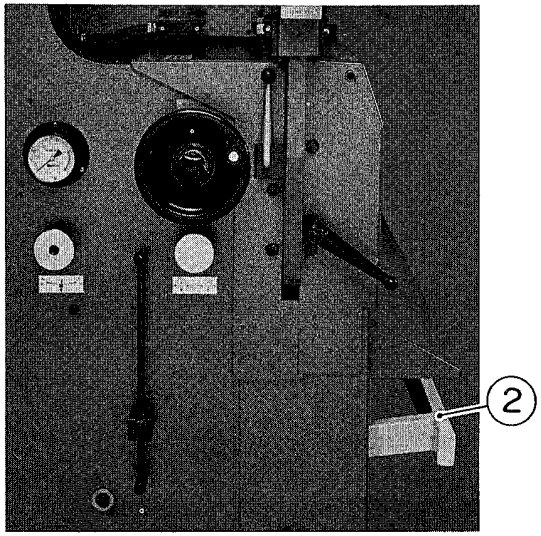

LAPIS SERVICES INC

(219)-464-9131

Amada Support, Rebuilds,
Sales and Fanuc Control Upgrade

AUTHORIZED CNC SYSTEM INTEGRATOR
FANUC

Index No.	Drawing No.	Parts Name	Type	Q'ty										Class	Note
				25	35S	50S	50	80S	80	100S	100	100L	125		
1	4049918a	Pedal ass'y		1	–	–	–	–	–	–	–	–	–		
1	4049933	Pedal ass'y		–	1	–	–	–	–	–	–	–	–		
1	4098340b	Pedal ass'y		–	–	1	–	–	–	–	–	–	–		
1	4049890c	Pedal ass'y		–	–	–	1	–	–	–	–	–	–		
1	4049902	Pedal ass'y		–	–	–	–	1	–	–	–	–	–		
1	4049899	Pedal ass'y		–	–	–	–	–	1	–	–	–	–		
1	4125330	Pedal ass'y		–	–	–	–	–	–	1	–	–	–		
1	4125331	Pedal ass'y		–	–	–	–	–	–	–	1	–	–		
1	4125333	Pedal ass'y		–	–	–	–	–	–	–	–	1	–		
1	4125334	Pedal ass'y		–	–	–	–	–	–	–	–	–	1		
2	4049919a	Pedal		–	–	–	–	–	–	–	–	–	–		
2	4098341	Pedal		–	–	–	–	–	–	–	–	–	–		
2	4049891c	Pedal		–	–	–	1	1	–	–	–	–	–		
2	4049900a	Pedal		–	–	–	–	–	–	–	–	–	–		
2	4049904a	Pedal		–	–	–	–	–	–	1	–	–	–		
2	4049908a	Pedal		–	–	–	–	–	–	–	1	–	–		
2	4049910a	Pedal		–	–	–	–	–	–	–	–	1	–		
2	4049914a	Pedal		–	–	–	–	–	–	–	–	–	1		
3	4049926b	Shaft		2	–	–	–	–	–	–	–	–	–		
3	4049931b	Sha		–	2	–	–	–	–	–	–	–	–		
3	4049916a	Shaft		–	–	2	–	–	–	–	–	–	2		
3	4049896a	Shaft		–	–	–	–	–	–	–	–	–	–		
3	4049901a	Shaft		–	–	–	–	2	2	2	2	2	–		
4	4040912	Support screw		1	1	1	1	1	1	1	1	1	1		
5		Nut		1	1	1	1	1	1	1	1	1	1		
6		Lock washer		1	1	1	1	1	1	1	1	1	1		
7	4049898	Push rod		1	1	1	1	1	1	1	–	–	1		
7	4049906	Push rod		–	–	–	–	–	–	–	1	1	–		

LAPIS SERVICES INC
(219)-464-9131
Amada Support, Rebuilds,
Sales and Fanuc Control Upgrade
AUTHORIZED CNC SYSTEM INTEGRATOR
FANUC

Index No.	Drawing No.	Parts Name	Type	Q'ty										Class	Note
				25	35S	50S	50	80S	80	100S	100	100L	125		
8	4091466	Rubber cushion		2	2	2	2	–	2	2	2	2	2		
8	51.570570.1	Rubber cushion		–	–	–	–	2	–	–	–	–	–		
9		Washer	M20	4	4	6	4	4	4	4	4	4	4		
10		Snap ring	STW-20	2	2	2	2	2	2	2	2	2	2		
11	4049897	Collar		–	–	–	2	2	2	2	2	2	–		
11	4049917	Collar		–	–	–	–	–	–	–	–	–	2		
12	4049885b	Pedal spring ass'y		1	1	–	–	–	2	2	–	–	–	3	
12	4091692a	Pedal spring ass'y		–	–	1	–	–	–	–	2	2	2	3	
12	4092941	Pedal spring ass'y		–	–	–	1	1	–	–	–	–	–	3	
13	4049886b	Shaft		1	1	1	1	1	2	2	2	2	2		
14	4049887a	Spring support		1	1	1	1	1	2	2	2	2	2		
15	4049888b	Spring support		1	1	1	1	1	2	2	2	2	2		
16	4049889a	Plate		1	1	1	1	1	2	2	2	2	2		
17	4091690	Spring		1	1	1	1	1	2	2	2	2	2		
18	4091691	Collar		–	–	1	–	–	–	–	–	–	–		
18	4091692	Collar		–	–	–	1	1	–	–	2	2	2		
19		Nut		2	2	2	2	2	4	4	4	4	4		
20		Washer		1	1	1	1	1	2	2	2	2	2		
21		Cap s		2	2	2	2	2	4	4	4	4	4		
22		Sp		2	2	2	2	2	4	4	4	4	4		

LAPIS SERVICES INC
(219)-464-9131
Amada Support, Rebuilds,
Sales and Fanuc Control Upgrade
AUTHORIZED CNC SYSTEM INTEGRATOR
FANUC

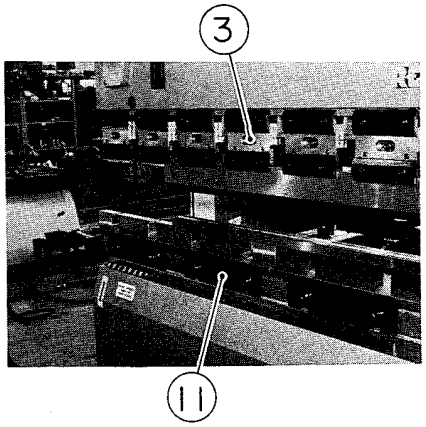

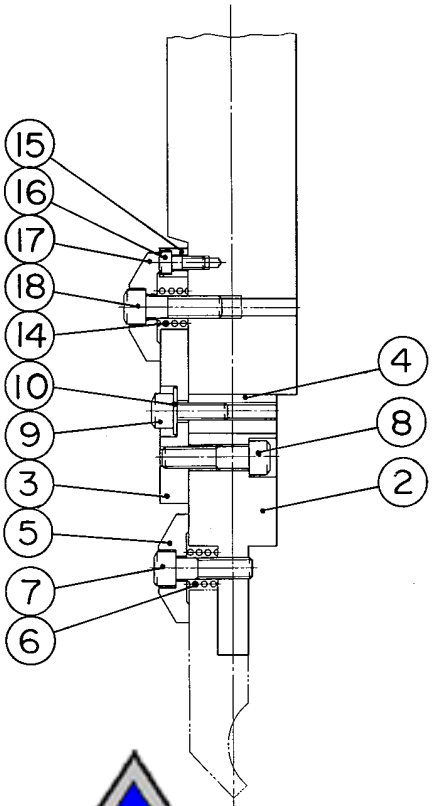

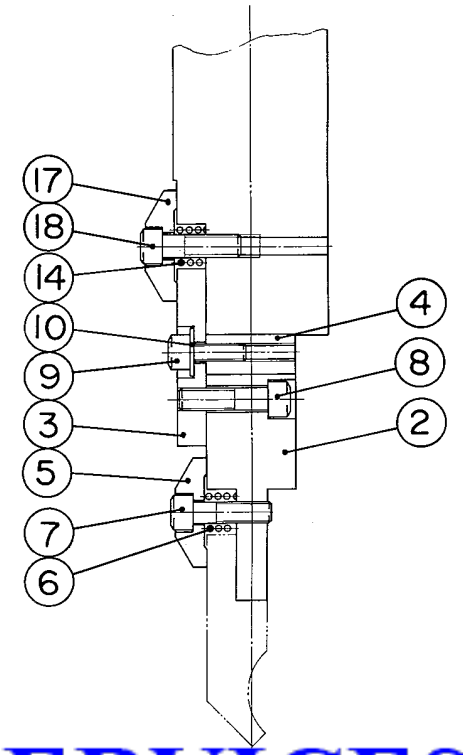

G-125

RG-25, 35S, 50S, 50, 80S, 80, 100S, 100

LAPIS SERVICES INC
(219)-464-9131

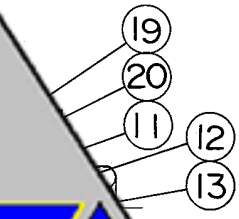

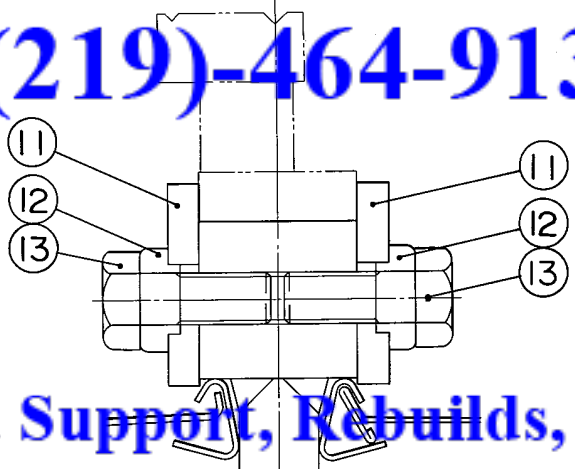

Amada Support, Rebuilds,
Sales and Fanuc Control Upgrade

100L, 125

RG-25, 35S, 50S, 50, 80S, 80

Index No.	Drawing No.	Parts Name	Type	Q'ty										Class	Note
				25	35S	50S	50	80S	80	100S	100	100L	125		
1	4099949	Distance piece ass'y		6	6	6	10	10	12	12	15	20	15		
2	51.57074.2a	Distance piece		6	6	6	10	10	12	12	15	20	15		
3	4098393	Punch lock plate		6	6	6	10	10	12	12	15	20	15		
4	4099950	Adjusting piece		6	6	6	10	10	12	12	15	20	15		
5	51.17028.1	Clamp plate		6	6	6	10	10	12	12	15	20	15		
6	51.44030.2	Spring		12	12	12	20	20	24	24	30	40	30	3	
7		Cap screw	M10 x 35	12	12	12	20	20	24	24	30	40	30	3	
8		Cap screw	M10 x 40	12	12	12	20	20	24	24	30	40	30		
9	560435b	Cap screw		6	6	6	10	10	12	12	15	20	15		
10	560434a	Washer		6	6	6	10	10	12	12	15	20	15		
11	51.17029.0a	Clamp plate		6	6	6	1[illegible]	[illegible]0	12	–	–	–	–		
11	51.17030.1	Clamp plate		–	–	–	–	–	–	12	14	20	14		
12	51.45037.0	Washer		1[illegible]	12	12	2[illegible]	2[illegible]	24	24	28	40	28		
13		Bolt		12	12	12	–	–	–	–	–	–	–		
13		Bolt		–	–	–	20	20	24	24	28	40	28		
14	51.44030.0	Spring		12	12	12	20	20	24	24	28	40	28		
15	4098391a	Bar		1	1	1	–	–	2	2	–	–	–		
15	4099948	Bar		–	–	–	2	2	–	–	3	4	–		
16		Cap		4	4	4	8	8	8	8	12	16	–		
17	51.17028.1	[illegible]		6	6	6	10	10	12	12	15	20	15		
18		Cap screw		12	12	12	20	20	24	24	30	40	30		
19	51.57045.1	Lock plate		–	–	–	–	–	–	12	14	20	14		
20		Cap screw		–	–	–	–	–	–	24	28	40	28		

LAPIS SERVICES INC
(219)-464-9131
Amada Support, Rebuilds,
Sales and Fanuc Control Upgrade
AUTHORIZED CNC SYSTEM INTEGRATOR
FANUC

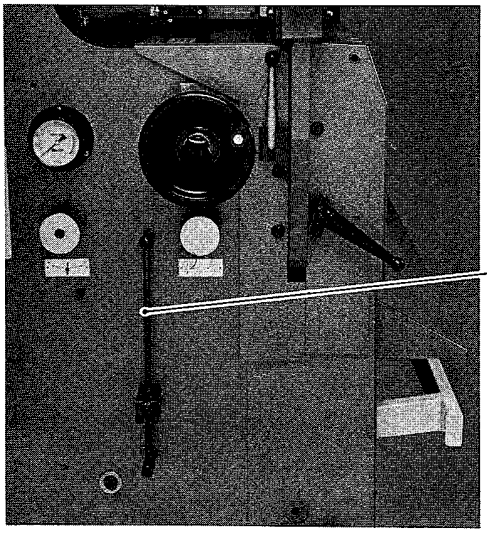

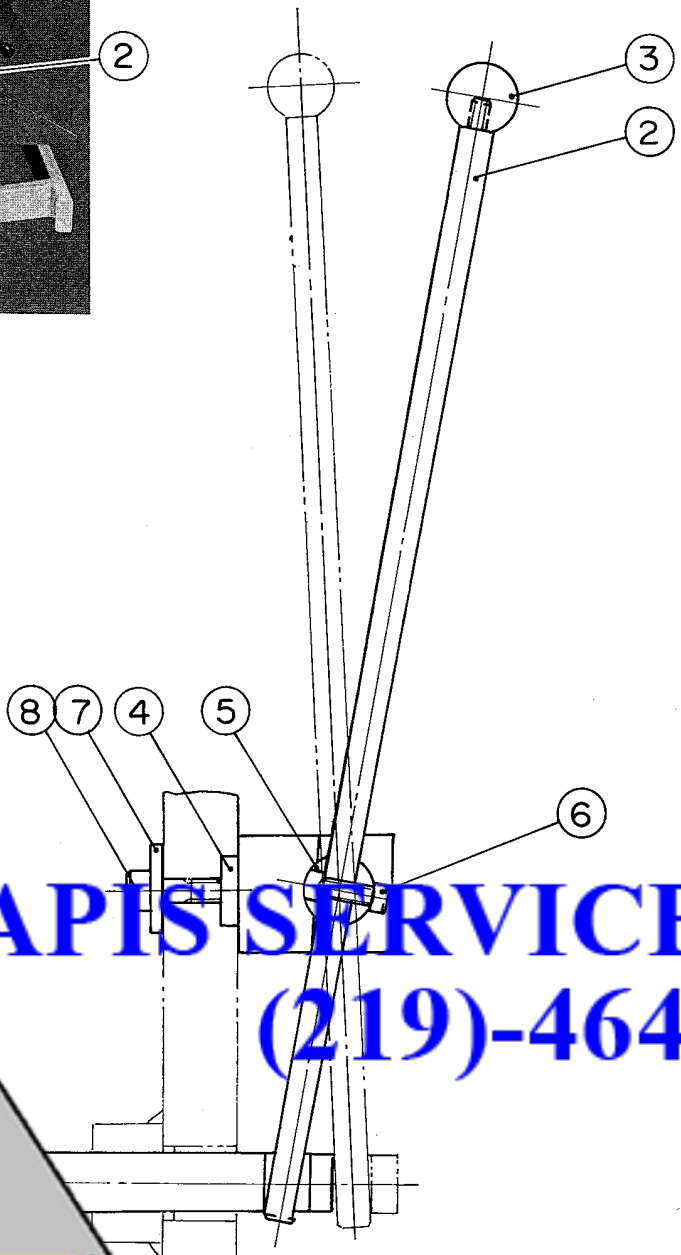

LAPIS SERVICES INC
(219)-464-9131
Amada Support, Rebuilds,
Sales and Fanuc Control Upgrade

Index No.	Drawing No.	Parts Name	Type	Q'ty										Class	Note
				25	35S	50S	50	80S	80	100S	100	100L	125		
1	4095030	Pedal lock ass'y		–	–	–	1	1	1	1	1	1	1		
2	4095026	Lever		–	–	–	1	1	1	1	1	1	1		
3		Knob	PC25 x 6	–	–	–	1	1	1	1	1	1	1		
4	4095027a	Shaft support		–	–	–	1	1	1	1	1	1	1		
5	4095028a	Shaft support		–	–	–	1	1	1	1	1	1	1		
6		Cap screw	M6 x 20	–	–	–	1	1	1	1	1	1	1		
7	4095029	Washer		–	–	–	1	1	1	1	1	1	1		
8		Cap screw	M8 x 50	–	–	–	1	–	–	–	–	–	–		
8		Cap screw	M8 x 70	–	–	–	–	1	1	1	1	1	1		
9	4095031	Stopper		–	–	–	1	–	–	–	–	–	–		
9	4095032	Stopper		–	–	–	–	1	1	1	1	1	1		
10		Plunger							1			1			
11		Nut	e 2	–	–	–	1	1	1	1	1	1	1		
12		Bolt		–					1	1		1			
13		Nut		–				1	1	1	1	1			

LAPIS SERVICES INC
(219)-464-9131
Amada Support, Rebuilds,
Sales and Fanuc Control Upgrade
AUTHORIZED CNC SYSTEM INTEGRATOR
FANUC

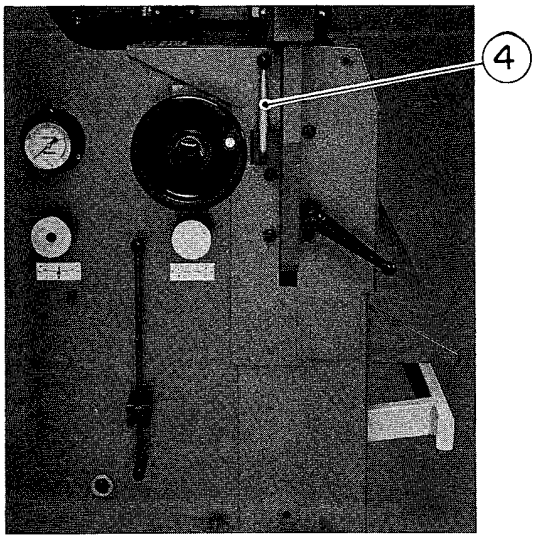

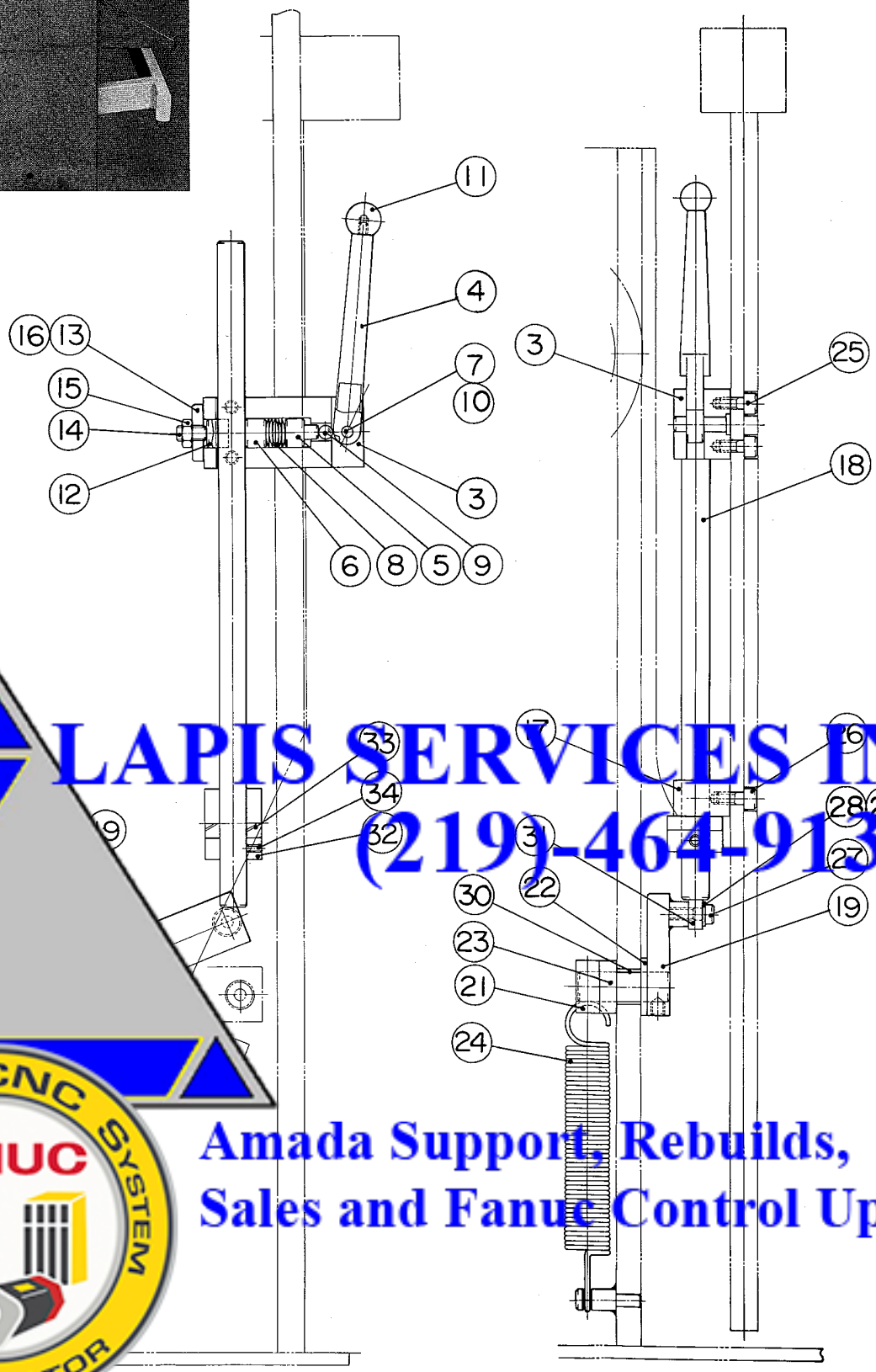

LAPIS SERVICES INC
(219)-464-9131
Amada Support, Rebuilds,
Sales and Fanuc Control Upgrade
AUTHORIZED CNC SYSTEM
FANUC
INTEGRATOR

Index No.	Drawing No.	Parts Name	Type	Q'ty										Class	Note
				25	35S	50S	50	80S	80	100S	100	100L	125		
1	4041222	Speed change setting device		1	1	–	–	–	–	–	–	–	–		
1	4122991	Speed change setting device		–	–	1	–	–	–	–	–	–	–		
2	4041002a	Lever ass'y		1	1	1	–	–	–	–	–	–	–		
3	4041003b	Support block		1	1	1	–	–	–	–	–	–	–		
4	4041004b	Lever		1	1	1	–	–	–	–	–	–	–		
5	4041005c	Push piece		1	1	1	–	–	–	–	–	–	–		
6	4041006a	Spacer		1	1	1	–	–	–	–	–	–	–		
7	4041007	Shaft		1	1	1	–	–	–	–	–	–	–		
8		Cone disk spring	DB-10	9	9	9	–	–	–	–	–	–	–	3	
9		Steel ball	ϕ	–	–	–	–	–	–	–	–	–	–		
10		Set screw (flat end)		2	2	2	–	–	–	–	–	–	–		
11		Knob	6	1	1	1	–	–	–	–	–	–	–		
12	4094320	Plate		1	1	1	–	–	–	–	–	–	–		
13	4094321	Cap		1	1	1	–	–	–	–	–	–	–		
14		Set screw (do		1	1	–	–	–	–	–	–	–	–		
14		Set screw (		–	–	1	–	–	–	–	–	–	–		
15		Nut		1	1	1	–	–	–	–	–	–	–		
16		Cap		4	4	4	–	–	–	–	–	–	–		
17	4041223b	G		1	1	–	–	–	–	–	–	–	–		
17	4122989	Guide plate		–	–	1	–	–	–	–	–	–	–		
18	4041224b	Setting rod		1	1	1	–	–	–	–	–	–	–		
19	4041225	Arm		1	1	1	–	–	–	–	–	–	–		
20	4041228	Shaft		1	1	–	–	–	–	–	–	–	–		
20	4122990	Shaft		–	–	1	–	–	–	–	–	–	–		
21	4041229	Arm		1	1	1	–	–	–	–	–	–	–		
22	4041230	Collar		1	1	–	–	–	–	–	–	–	–		

LAPIS SERVICES INC
(219)-464-9131
Amada Support, Rebuilds,
Sales and Fanuc Control Upgrade
AUTHORIZED CNC SYSTEM FANUC INTEGRATOR

Index No.	Drawing No.	Parts Name	Type	Q'ty										Class	Note
				25	35S	50S	50	80S	80	100S	100	100L	125		
22		Washer	M20	–	–	1	–	–	–	–	–	–	–		
23	4041231	Spacer		1	1	1	–	–	–	–	–	–	–		
24	4041232	Tension spring		1	1	1	–	–	–	–	–	–	–	3	
25		Cap screw	M10 x 35	2	2	2	–	–	–	–	–	–	–		
26		Cap screw	M10 x 25	2	2	–	–	–	–	–	–	–	–		
26		Cap screw	M10 x 35	–	–	2	–	–	–	–	–	–	–		
27		Cap screw	M8 x 20	1	1	1	–	–	–	–	–	–	–		
28		Washer	M8 type 1	1	1	1	–	–	–	–	–	–	–		
29		Set screw (cone end)	M10 x 16	2	2	2	–	–	–	–	–	–	–		
30		DU bushing	MB2015DU	1	1	1	–	–	–	–	–	–	–		
31		Ball bearing	201ZZ	1	1	1	–	–	–	–	–	–	–		
32	4046168a	Stopper		1	–	–	–	–	–	–	–	–	–		
33	4046169	Cushion		1	1	1	–	–	–	–	–	–	–		
34		Set screw (cup end)		2	2	2	–	–	–	–	–	–	–		

LAPIS SERVICES INC
(219)-464-9131
AUTHORIZED CNC SYSTEM FANUC INTEGRATOR
Amada Support, Rebuilds,
Sales and Fanuc Control Upgrade

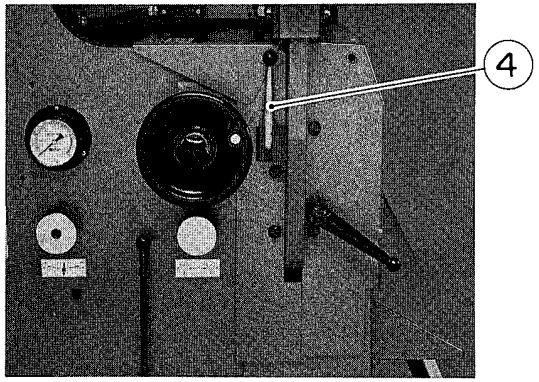

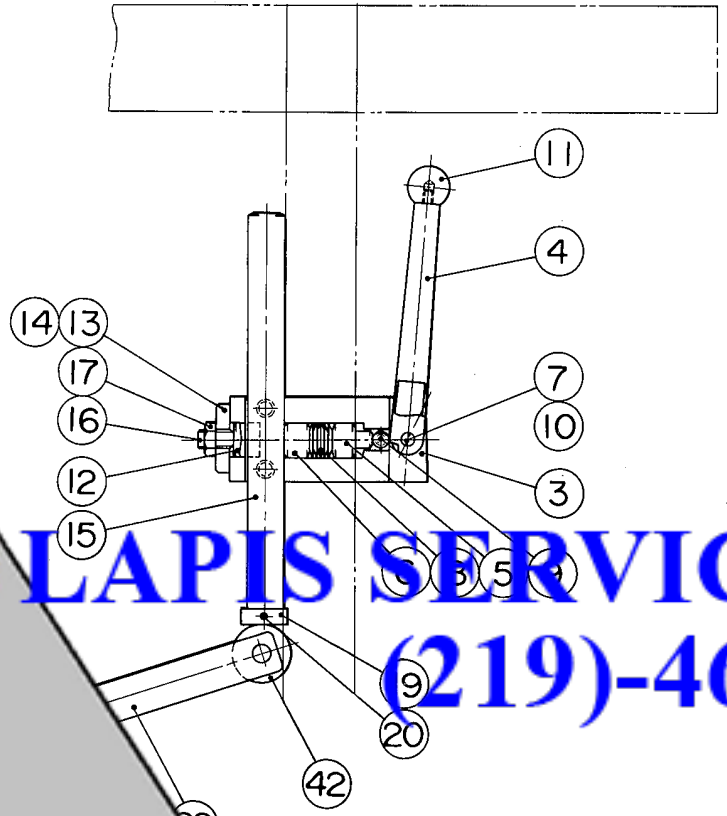

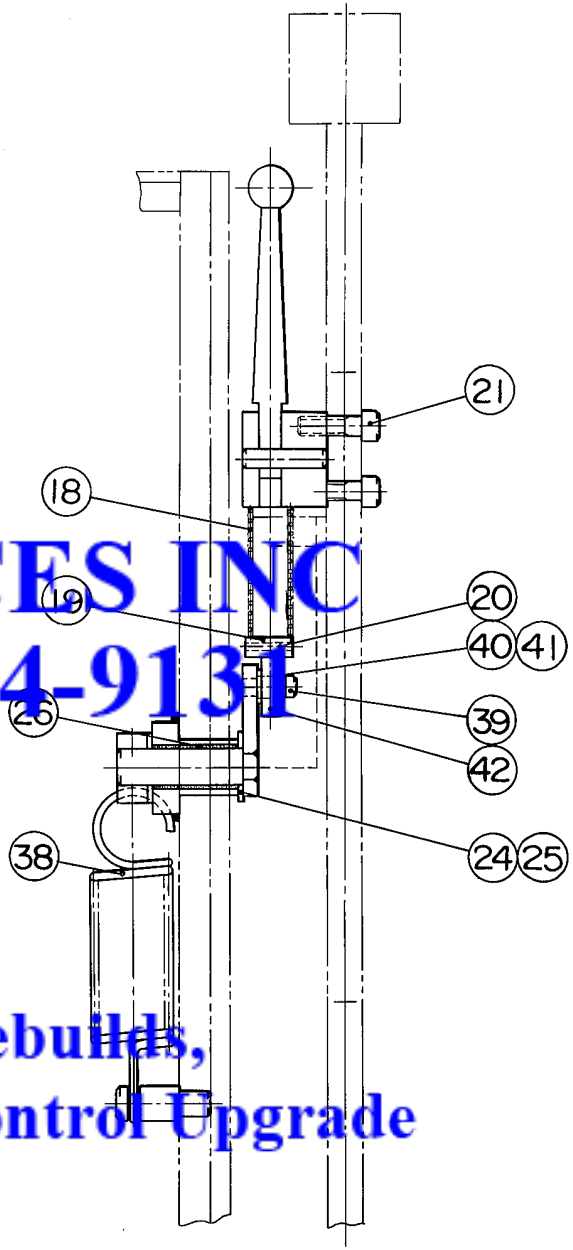

LAPIS SERVICES INC
(219)-464-9131
Amada Support, Rebuilds,
Sales and Fanuc Control Upgrade
AUTHORIZED CNC SYSTEM INTEGRATOR
FANUC

Index No.	Drawing No.	Parts Name	Type	Q'ty										Class	Note
				25	35S	50S	50	80S	80	100S	100	100L	125		
1	4124505b	Speed change setting device		–	–	–	1	1	–	–	–	–	–		
1	4124506	Speed change setting device		–	–	–	–	–	1	–	–	–	–		
1	4124507	Speed change setting device		–	–	–	–	–	–	1	1	1	–		
1	4124508	Speed change setting device		–	–	–	–	–	–	–	–	–	1		
2	4124519a	Lever ass'y		–	–	–	1	1	1	1	1	1	1		
3	4041003c	Support block		–	–	–	1	1	1	1	1	1	1		
4	4041004b	Lever		–	–	–	1	1	1	1	1	1	1		
5	4041005b	Push piece		–	–	–	1	1	1	1	1	1	1		
6	4041006a	Spacer		–	–	–	1	1	1	1	1	1	1		
7	4041007	Shaft		–	–	–	–	–	1	1	1	1	1		
8		Cone disk spring		–	–	–	9	–	9	9	–	9	9	3	
9		Steel ball		–	–	–	1	1	1	1	1	1	1		
10		Set screw (flat end)		–	–	–	2	2	–	2	–	2	2		
11		Knob		–	–	–	1	1	1	1	1	1	1		
12	4094320	Plate		–	–	–	1	1	1	1	1	1	1		
13	4094321	Cap		–	–	–	1	1	1	1	1	1	1		
14		Cap sc		–	–	–	4	4	4	4	4	4	4		
15	4124522a	Rod		–	–	–	1	1	1	1	1	1	1		
16		S		–	–	–	1	1	1	1	1	1	1		
17		Nut		–	–	–	1	1	1	1	1	1	1		
18	4124529	Pressure spring		–	–	–	1	1	1	1	1	1	1		
19	4124523a	Spring suppor		–	–	–	1	1	1	1	1	1	1		
20		Spring pin		–	–	–	2	2	2	2	2	2	2		
21		Cap screw		–	–	–	2	2	2	2	2	2	2		
22	4124509a	Arm		–	–	–	1	1	–	–	–	–	–		
22	4124513a	Arm		–	–	–	–	–	1	–	–	–	–		

LAPIS SERVICES INC
(219)-464-9131
Amada Support, Rebuilds,
Sales and Fanuc Control Upgrade
AUTHORIZED CNC SYSTEM INTEGRATOR FANUC

Index No.	Drawing No.	Parts Name	Type	Q'ty										Class	Note
				25	35S	50S	50	80S	80	100S	100	100L	125		
22	4124515a	Arm		–	–	–	–	–	–	1	1	1	–		
22	4124517a	Arm		–	–	–	–	–	–	–	–	–	1		
23		Set screw (cone end)	M10 x 16	–	–	–	2	2	1	2	2	2	2		
24		Washer	M20	–	–	–	2	2	2	1	1	1	1		
25	4124532a	Collar		–	–	–	–	–	–	1	1	1	–		
25	4124526a	Collar		–	–	–	–	–	–	–	–	–	1		
26		DU bushing	MB2030DU	–	–	–	1	1	1	1	1	1	1		
27	4124597a	Block		–	–	–	1	1	1	1	1	1	1		
28		Cap screw	M10 x 25	–	–	–	2	2	2	–	–	–	–		
28		Cap screw	M10 x 30	–	–	–	–	–	–	2	2	2	–		
28		Cap screw	M10 x 40	–	–	–	–	–	–	–	–	–	2		
29	4124527	Arm		–	–	–	1	1	1	1	1	1	1		
30		Limit switch		–	–	–	1	1	1	1	1	1	1	3	
31		Pan head machine scre		–	–	–	2	2	2	2	2	2	2		
32		Washer		–	–	–	2	2	2	2	2	2	2		
33		Spring washer		–	–	–	2	2	2	2	2	2	2		
34	4125379	L.S. setting pl		–	–	–	1	1	1	1	1	1	1		
35		Cap screw		–	–	–	2	2	2	2	2	2	2		
36		Washer		–	–	–	2	2	2	2	2	2	2		
37		Sprin		–	–	–	2	2	2	2	2	2	2		
38	4041232	Te		–	–	–	1	1	1	1	1	1	1	3	
39		Cap screw		–	–	–	1	1	1	1	1	1	1		
40		Spring washer		–	–	–	1	1	1	1	1	1	1		
41		Washer		–	–	–	1	1	1	1	1	1	1		
42		Ball bearing		–	–	–	1	1	1	1	1	1	1		

LAPIS SERVICES INC
(219)-464-9131
Amada Support, Rebuilds,
Sales and Fanuc Control Upgrade
AUTHORIZED CNC SYSTEM INTEGRATOR
FANUC

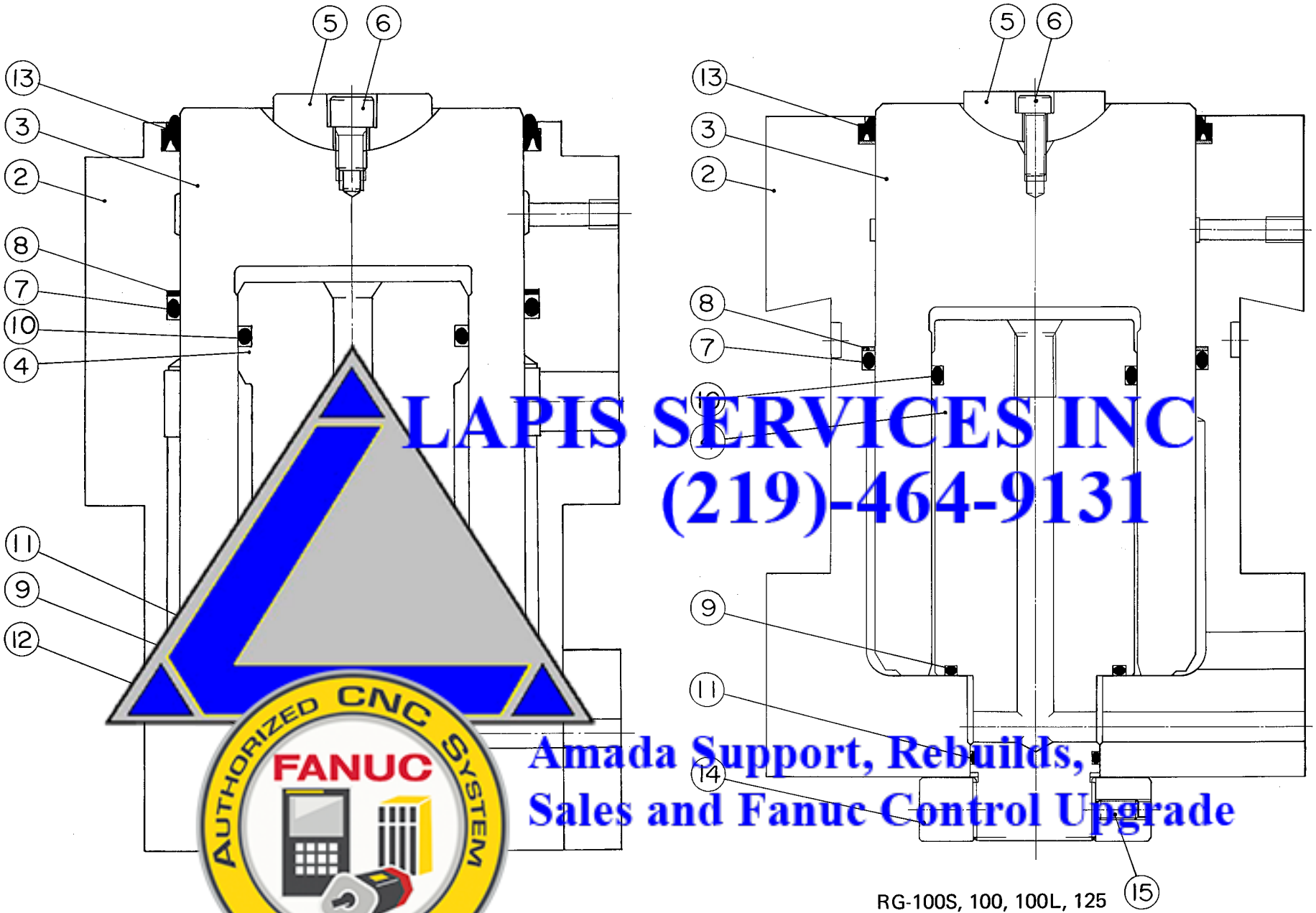

RG-100S, 100, 100L, 125

LAPIS SERVICES INC
(219)-464-9131
Amada Support, Rebuilds,
Sales and Fanuc Control Upgrade
AUTHORIZED CNC SYSTEM INTEGRATOR
FANUC

Index No.	Drawing No.	Parts Name	Type	Q'ty										Class	Note
				25	35S	50S	50	80S	80	100S	100	100L	125		
1	4091555b	Main cylinder ass'y		1	1	–	–	–	–	–	–	–	–		
1	4098222	Main cylinder ass'y		–	–	1	–	–	–	–	–	–	–		
1	4091556b	Main cylinder ass'y		–	–	–	1	1	1	–	–	–	–		
1	4091558b	Main cylinder ass'y		–	–	–	–	–	–	1	1	1	–		
1	4091562b	Main cylinder ass'y		–	–	–	–	–	–	–	–	–	1		
2	4091605a	Cylinder		1	1	–	–	–	–	–	–	–	–		
2	4098223	Cylinder		–	–	1	–	–	–	–	–	–	–		
2	4091606a	Cylinder		–	–	–	1	1	1	–	–	–	–		
2	4091608a	Cylinder		–	–	–	–	–	–	1	1	1	–		
2	4091612a	Cylinder		–	–	–	–	–	–	–	–	–	1		
3	4041030b	Plunger		1	1	–	–	–	–	–	–	–	–		
3	4098224	Plunger		–	–	1	–	–	–	–	–	–	–		
3	4040685b	Plunger		–	–	–	1	1	1	–	–	–	–		
3	4042160b	Plunger		–	–	–	–	–	–	1	–	1	–		
3	4043738	Plunger		–	–	–	–	–	–	–	–	–	1		
4	4049699	Inner plunger		1	1	–	–	–	–	–	–	–	–		
4	4098225	Inner plunge		–	–	1	–	–	–	–	–	–	–		
4	4049702	Inner plu		–	–	–	1	1	1	–	–	–	–		
4	4042158	Inner		–	–	–	–	–	–	1	1	1	–		
4	385226a	Inn		–	–	–	–	–	–	–	–	–	1		
5	51.46320.0a	S		1	1	–	1	1	1	1	1	1	–		
5	4043739	Spherical suppo		–	–	1	–	–	–	–	–	–	1		
6	51.57517.0	Cap screw		1	1	–	1	1	1	–	–	–	1		
6	51.48025.1a	Support screw		–	–	1	–	–	–	1	1	1	–		
7		O-ring		1	1	–	1	1	1	–	–	–	–	1	
7		O-ring		–	–	1	–	–	–	–	–	–	1	1	
7		O-ring		–	–	–	–	–	–	1	1	1	–	1	
8		Back-up ring		1	1	–	1	1	1	–	–	–	–	1	

LAPIS SERVICES INC
(219)-464-9131
Amada Support, Rebuilds,
Sales and Fanuc Control Upgrade
AUTHORIZED CNC SYSTEM INTEGRATOR
FANUC

Index No.	Drawing No.	Parts Name	Type	Q'ty										Class	Note
				25	35S	50S	50	80S	80	100S	100	100L	125		
8		Back-up ring	T3P-150	–	–	1	–	–	–	–	–	–	1	1	
8		Back-up ring	T3P-125	–	–	–	–	–	–	1	1	1	–	1	
9		O-ring	1BP-50A	1	1	–	1	1	1	–	–	–	–	1	
9		O-ring	1BP-60	–	–	1	–	–	–	1	1	1	–	1	
9		O-ring	G-80	–	–	–	–	–	–	–	–	–	1	1	
10		O-ring	1AP-44	1	1	–	–	–	–	–	–	–	–	1	
10		O-ring	1AP-50	–	–	1	–	–	–	–	–	–	–	1	
10		O-ring	1AP-70	–	–	–	1	1	1	1	1	1	–	1	
10		O-ring	1AP-90	–	–	–	–	–	–	–	–	–	1	1	
11		O-ring	1BP-18	1	1	1	1	1	1	–	–	–	–	1	
11		O-ring	1BP-44	–	–	–	–	–	–	1	1	1	–	1	
11		O-ring	[illegible]	–	–	–	–	–	–	–	–	–	1	1	
12		Cap screw	[illegible]0	4	4	–	4	4	4	–	–	–	–		
12		Cap screw	[illegible]	–	–	4	–	–	–	–	–	–	–		
13		Dust seal	[illegible]	1	1	[illegible]	[illegible]	1	1	–	–	–	–	1	
13		Dust seal	[illegible]	–	–	1	–	–	–	–	–	–	1	1	
13		Dust seal	[illegible]	–	–	–	–	–	–	1	1	1	–	1	
14	4042159	Nut	[illegible]	–	–	–	–	–	–	1	1	1	–		
14	386414	Nut	[illegible]	–	–	–	–	–	–	–	–	–	1		
15		Set s[illegible]	[illegible]	–	–	–	–	–	–	1	1	1	1		

LAPIS SERVICES INC
(219)-464-9131
Amada Support, Rebuilds,
Sales and Fanuc Control Upgrade
AUTHORIZED CNC SYSTEM INTEGRATOR FANUC

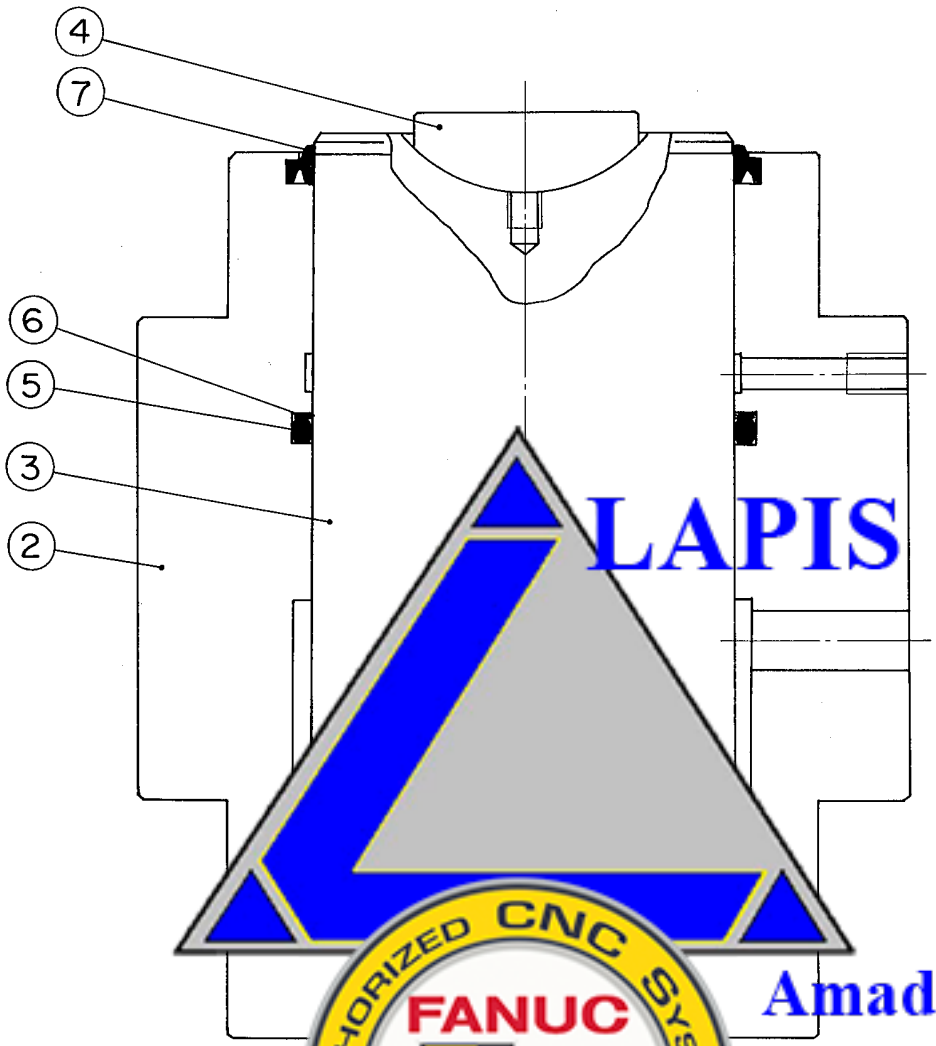

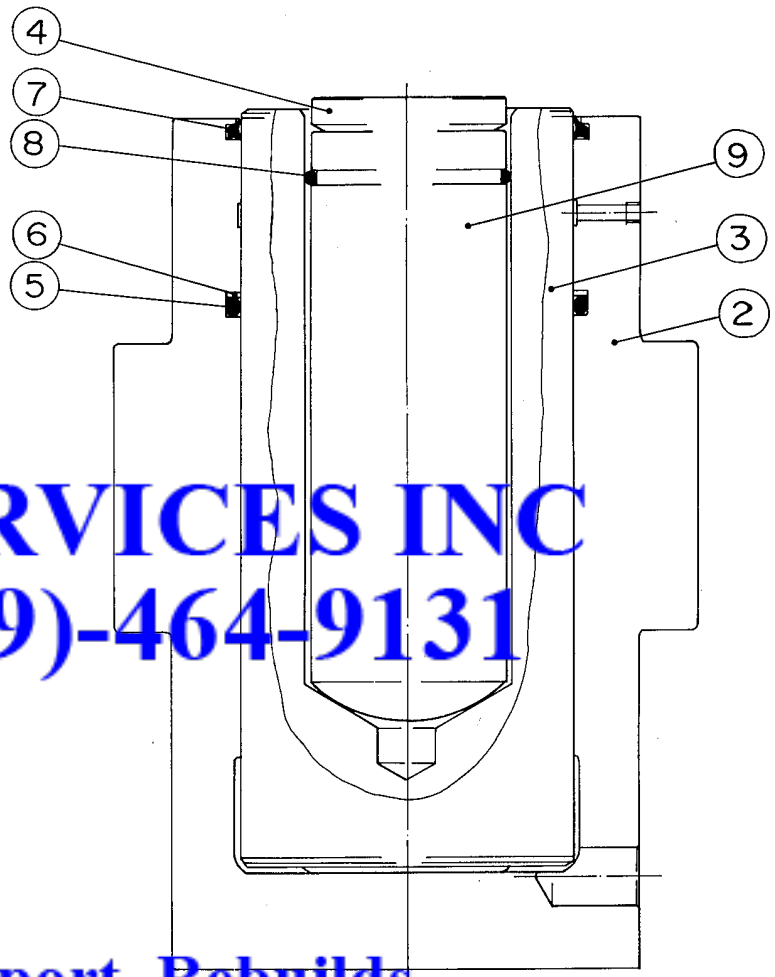

LAPIS SERVICES INC
(219)-464-9131
Amada Support, Rebuilds,
Sales and Fanuc Control Upgrade

RG-100S, 100, 100L, 125

Index No.	Drawing No.	Parts Name	Type	Q'ty										Class	Note
				25	35S	50S	50	80S	80	100S	100	100L	125		
1	4091557b	Sub cylinder ass'y		–	–	–	2	2	2	–	–	–	–		
1	4091559a	Sub cylinder ass'y		–	–	–	–	–	–	2	2	2	–		
1	4091563a	Sub cylinder ass'y		–	–	–	–	–	–	–	–	–	2		
2	4091607a	Cylinder		–	–	–	2	2	2	–	–	–	–		
2	4091609a	Cylinder		–	–	–	–	–	–	2	2	2	–		
2	4091613a	Cylinder		–	–	–	–	–	–	–	–	–	2		
3	4040860	Plunger piston		–	–	–	2	2	2	–	–	–	–		
3	386462a	Plunger piston		–	–	–	–	–	–	2	2	2	–		
3	385231	Plunger piston		–	–	–	–	–	–	–	–	–	2		
4	55.01569.4b	Spherical support		–	–	–	2	2	2	2	2	2	–		
4	385228a	Spherical support		–	–	–	–	–	–	–	–	–	2		
5		O-ring	00	–	–	–	2	–	2	–	–	–	–	1	
5		O-ring	5	–	–	–	–	–	–	2	2	2	–	1	
5		O-ring		–	–	–	–	–	–	–	–	–	–	1	
6		Back-up ring		–	–	–	2	2	2	–	–	–	–	1	
6		Back-up ring		–	–	–	–	–	–	2	2	2	–	1	
6		Back-up ring		–	–	–	–	–	–	–	–	–	2	1	
7		Dust seal		–	–	–	2	2	2	–	–	–	–	1	
7		Dust s		–	–	–	–	–	–	2	2	2	–	1	
7		Dus		–	–	–	–	–	–	–	–	–	2	1	
8		O		–	–	–	–	–	–	2	2	2	–	1	
8		O-ring		–	–	–	–	–	–	–	–	–	2	1	
9	386459a	Inner rod		–	–	–	–	–	–	2	2	2	–		
9	386523	Inner rod		–	–	–	–	–	–	–	–	–	2		

LAPIS SERVICES INC
(219)-464-9131
Amada Support, Rebuilds,
Sales and Fanuc Control Upgrade
AUTHORIZED CNC SYSTEM INTEGRATOR
FANUC

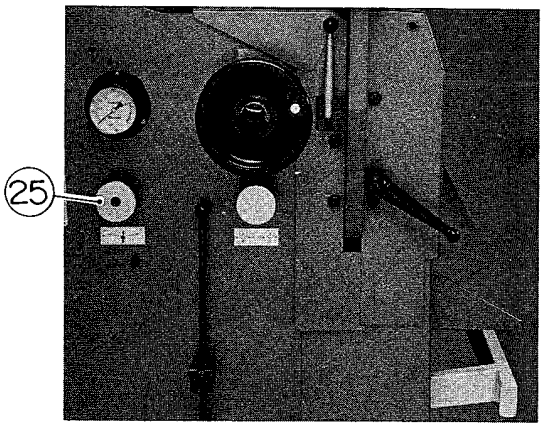

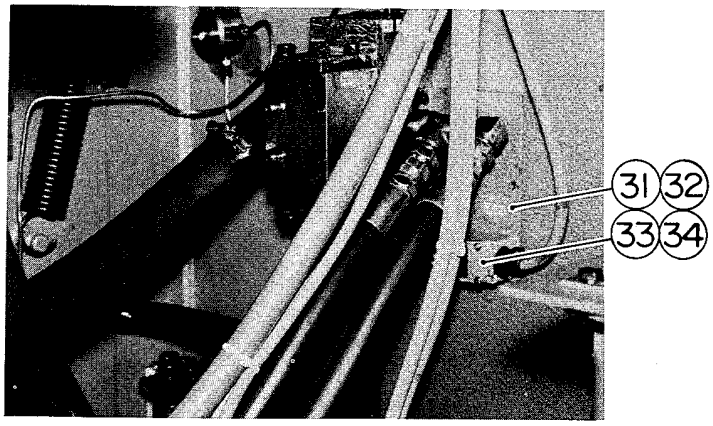

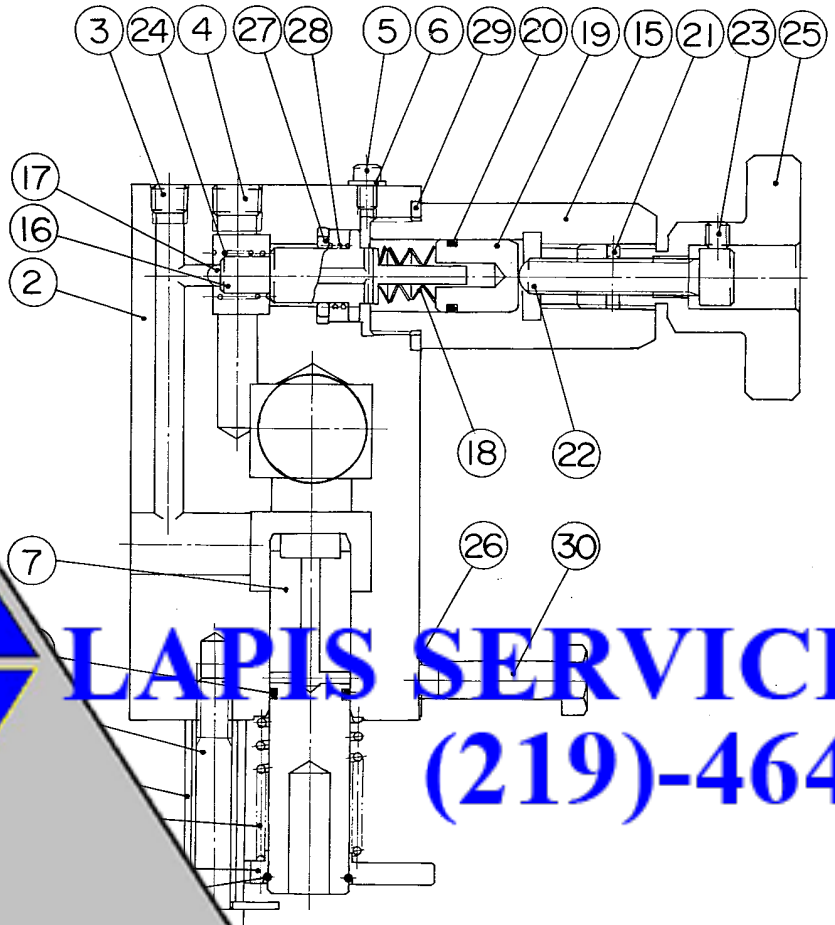

LAPIS SERVICES INC
(219)-464-9131
AUTHORIZED CNC SYSTEM INTEGRATOR
FANUC
Amada Support, Rebuilds,
Sales and Fanuc Control Upgrade

Index No.	Drawing No.	Parts Name	Type	Q'ty										Class	Note
				25	35S	50S	50	80S	80	100S	100	100L	125		
1	4048574e	Distributor ass'y		1	1	1	1	1	1	1	1	1	1		
2	4048575d	Valve body		1	1	1	1	1	1	1	1	1	1		
3		Plug	PT 1/8''	1	1	1	1	1	1	1	1	1	1		
4		Plug	PT 1/4''	1	1	1	1	1	1	1	1	1	1		
5		Bolt	M5 x 8	1	1	1	1	1	1	1	1	1	1		
6		Seal washer	W5	1	1	1	1	1	1	1	1	1	1		
7	4040900d	Spool		1	1	1	1	1	1	1	1	1	1		
8		O-ring	1AP-18	1	1	1	1	1	1	1	1	1	1	1	
9	4095130	Spring support		1	1	1	1	1	1	1	1	1	1		
10	50.440153.1	Pressure spring		1	1	1	1	1	1	1	1	1	1	2	
11	50.440110.1	Retainer		1	1	1	1	1	1	1	1	1	1		
12	4092995	Spacer		1	1	1	1	1	1	1	1	1	1		
13	382741	Washer		1	1	1	1	1	1	1	1	1	1		
14		Cap screw		1	1	1	1	1	1	1	1	1	1		
15	4048576c	Screw guide		1	1	1	1	1	1	1	1	1	1		
16	4048577a	Spool		1	1	1	1	1	1	1	1	1	1		
17		Steel ball		1	1	1	1	1	1	1	1	1	1		
18		Cone disk		10	10	10	10	10	10	10	10	10	10	2	
19	4048662a	Spool		1	1	1	1	1	1	1	1	1	1		
20		O-ri		1	1	1	1	1	1	1	1	1	1	1	
21		N		2	2	2	2	2	2	2	2	2	2		
22	4094953	Bolt		1	1	1	1	1	1	1	1	1	1		
23		Set screw (cup		1	1	1	1	1	1	1	1	1	1		
24	51.44030.1	Spring		1	1	1	1	1	1	1	1	1	1		
25	4048579b	Knob		1	1	1	1	1	1	1	1	1	1		
26	4048500	Washer		2	2	2	2	2	2	2	2	2	2		
27	4048860	Collar		1	1	1	1	1	1	1	1	1	1		
28	4048861	Spring		1	1	1	1	1	1	1	1	1	1	2	

LAPIS SERVICES INC
(219)-464-9131
Amada Support, Rebuilds,
Sales and Fanuc Control Upgrade
AUTHORIZED CNC SYSTEM INTEGRATOR
FANUC

Unit No. 16

Index No.	Drawing No.	Parts Name	Type	Q'ty										Class	Note
				25	35S	50S	50	80S	80	100S	100	100L	125		
29		Affixed seal	KP-C-06	1	1	1	1	1	1	1	1	1	1	1	
30		Bolt	M10 x 30	2	–	–	–	–	–	–	–	–	–		
30		Bolt	M10 x 35	–	2	–	–	–	–	–	–	–	–		
30		Bolt	M10 x 50	–	–	2	2	–	–	2	2	2	2		
30		Bolt	M10 x 70	–	–	–	–	2	2	–	–	–	–		
31	4095091a	L.S. bracket		1	1	1	1	1	1	1	1	1	1		
32		Cap screw	M6 x 10	4	4	4	4	4	4	4	4	4	4		
33		Limit switch	1LS19-J	1	1	1	1	1	1	1	1	1	1	3	
34		Cap screw	M6 x 10	2	2	2	2	2	2	2	2	2	2		

LAPIS SERVICES INC
(219)-464-9131
AUTHORIZED CNC SYSTEM FANUC INTEGRATOR
Amada Support, Rebuilds,
Sales and Fanuc Control Upgrade

Unit No. 16

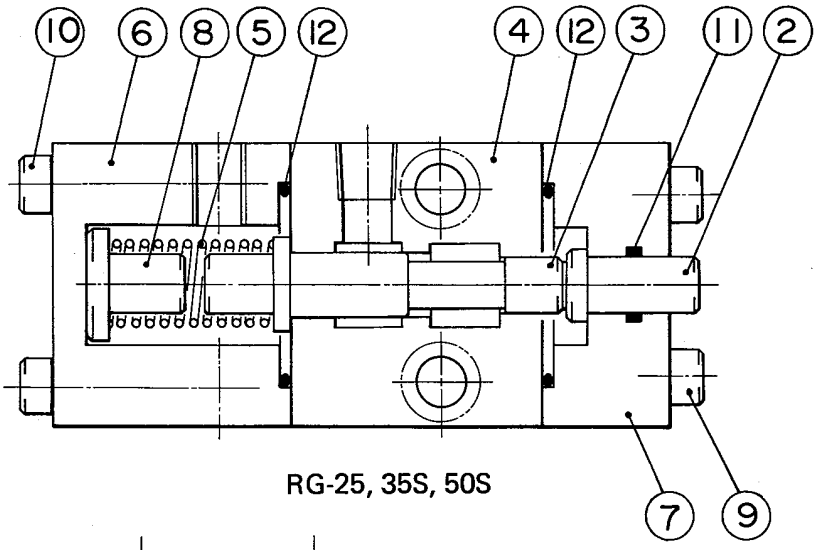

RG-25, 35S, 50S

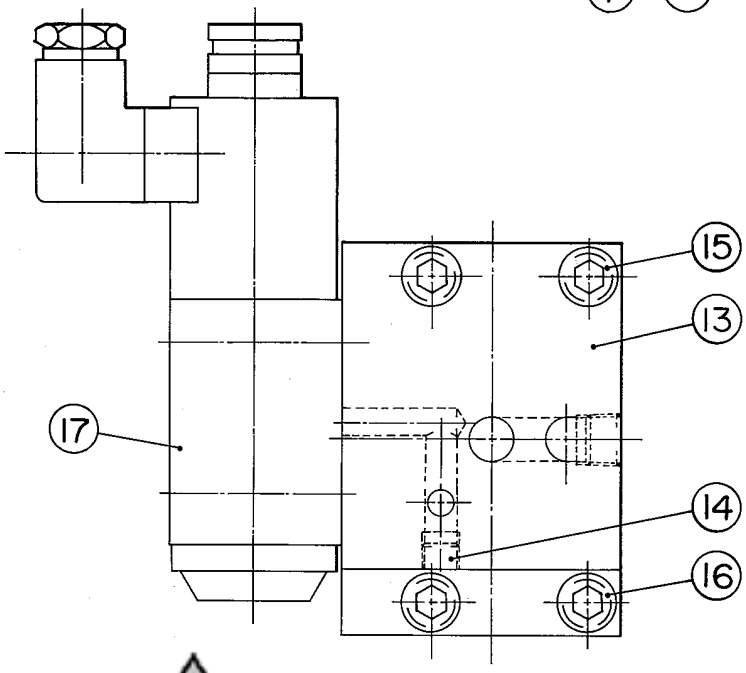

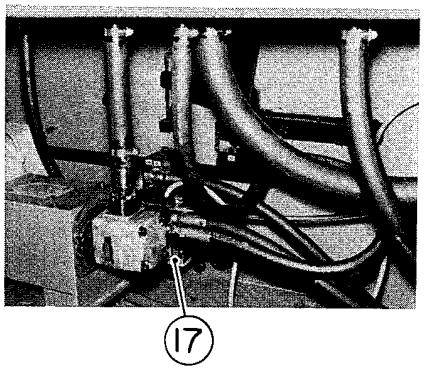

RG-50, 80S, 80

RG-100S, 100, 100L, 125

LAPIS SERVICES INC
(219)-464-9131
Amada Support, Rebuilds,
Sales and Fanuc Control Upgrade
AUTHORIZED CNC SYSTEM
FANUC
INTEGRATOR

Index No.	Drawing No.	Parts Name	Type	Q'ty										Class	Note
				25	35S	50S	50	80S	80	100S	100	100L	125		
1	4041561a	Sequence valve ass'y		1	1	–	–	–	–	–	–	–	–		
1	4124533	Sequence valve ass'y		–	–	1	–	–	–	–	–	–	–		
1	4123994	Sequence valve ass'y		–	–	–	1	1	1	–	–	–	–		
1	4124165	Sequence valve ass'y		–	–	–	–	–	–	1	1	1	–		
1	4124448	Sequence valve ass'y		–	–	–	–	–	–	–	–	–	1		
2	4041562	Push rod		1	1	–	–	–	–	–	–	–	–		
2	4124534	Push rod		–	–	1	–	–	–	–	–	–	–		
3	4041563b	Spool		1	1	–	–	–	–	–	–	–	–		
3	4124535	Spool		–	–	1	–	–	–	–	–	–	–		
4	4041564b	Block (C)		1	1	1	–	–	–	–	–	–	–		
5	4041565a	Spring		[illegible]	[illegible]	[illegible]	[illegible]	[illegible]	[illegible]	[illegible]	[illegible]	[illegible]	[illegible]	2	
6	4041566a	Block (B)		[illegible]	[illegible]	[illegible]	[illegible]	[illegible]	[illegible]	[illegible]	[illegible]	[illegible]	[illegible]		
7	4041567	Block (C)		1	1	1	–	–	–	–	–	–	–		
8	4047860	Stopper		1	1	1	–	–	–	–	–	–	–		
9		Cap screw		4	4	4	–	–	–	–	–	–	–		
10		Cap screw		4	4	4	–	–	–	–	–	–	–		
11		O-ring		1	1	1	–	–	–	–	–	–	–	1	
12		O-ring		2	2	2	–	–	–	–	–	–	–	1	
13	4123995	Block		–	–	–	1	1	1	–	–	–	–		
13	4124166	Bloc[illegible]		–	–	–	–	–	–	1	1	1	–		
13	4124449	B[illegible]		–	–	–	–	–	–	–	–	–	1		
14		Plug		[illegible]	[illegible]	[illegible]	1	1	1	4	4	4	4		
15		Cap screw		–	–	–	2	2	2	–	–	–	–		
15		Cap screw		[illegible]	[illegible]	[illegible]	[illegible]	[illegible]	[illegible]	4	4	4	4		
16		Cap screw		–	–	–	2	2	2	–	–	–	–		
17		Solenoid valve		–	–	–	1	1	1	1	1	1	1	3	
18	4124731	Plate		–	–	–	–	–	–	1	1	1	–		
19		O-ring		–	–	–	–	–	–	3	3	3	–	1	

LAPIS SERVICES INC
(219)-464-9131
Amada Support, Rebuilds,
Sales and Fanuc Control Upgrade
AUTHORIZED CNC SYSTEM INTEGRATOR
FANUC

Index No.	Drawing No.	Parts Name	Type	Q'ty										Class	Note
				25	35S	50S	50	80S	80	100S	100	100L	125		
20	4095480	Ball support		–	–	–	–	–	–	1	1	1	1		
21		Steel ball	5/16″	–	–	–	–	–	–	1	1	1	1		
22	4096345	Spool		–	–	–	–	–	–	1	1	1	1		
23		Cone disk spring	R-11	–	–	–	–	–	–	13	13	13	13	2	
24	4096344a	Cap		–	–	–	–	–	–	1	1	1	1		
25		Cap screw	M5 x 15	–	–	–	–	–	–	4	4	4	4		
26		O-ring	1BP-10	–	–	–	–	–	–	1	1	1	1	1	
27		Bolt	M6 x 20	–	–	–	–	–	–	1	1	1	1		
28		Nut	M6 type 3	–	–	–	–	–	–	1	1	1	1		
29	4095483	Cap		–	–	–	–	–	–	1	1	1	1		
30		Plug	3/[illegible]	–	–	–	–	–	–	1	1	1	1		
31		Cap screw	[illegible]5	–	–	–	–	–	–	4	4	4	4		
32		O-ring		–	–	–	–	–	–	4	4	4	4	1	

LAPIS SERVICES INC
(219)-464-9131
Amada Support, Rebuilds,
Sales and Fanuc Control Upgrade
AUTHORIZED CNC SYSTEM INTEGRATOR FANUC

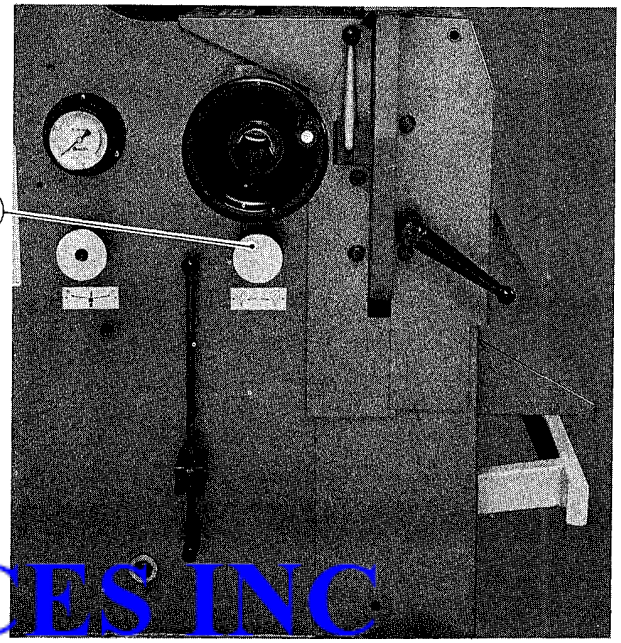

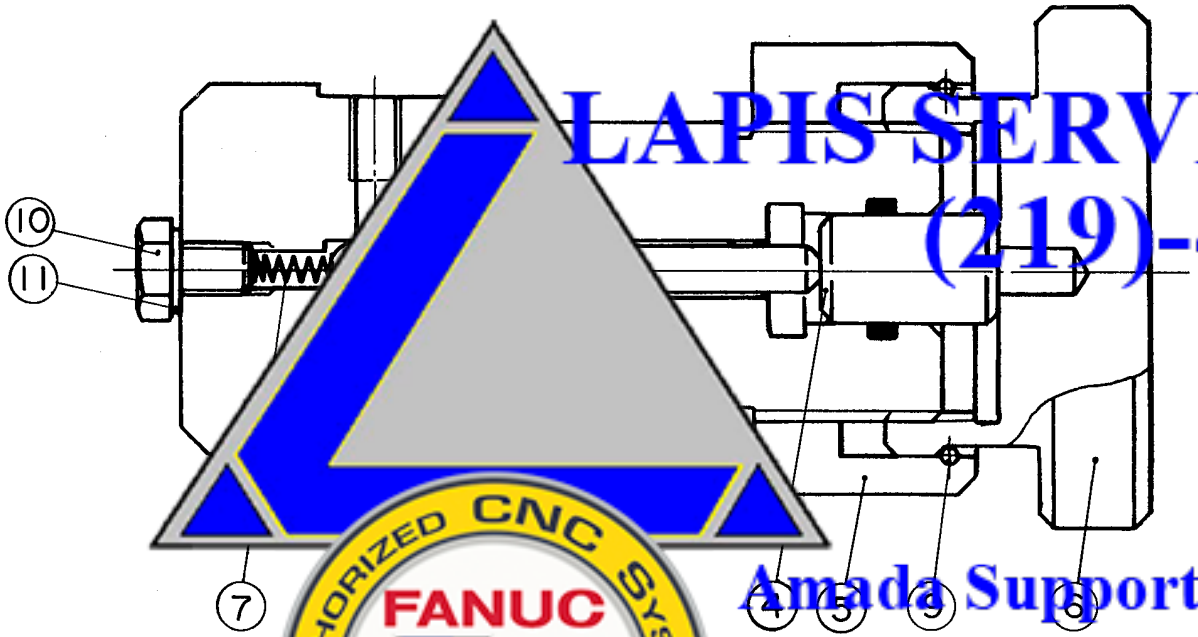

LAPIS SERVICES INC
(219)-464-9131
Amada Support, Rebuilds,
Sales and Fanuc Control Upgrade
AUTHORIZED CNC SYSTEM
FANUC
INTEGRATOR

Index No.	Drawing No.	Parts Name	Type	Q'ty										Class	Note
				25	35S	50S	50	80S	80	100S	100	100L	125		
1	4091372	Cut-off valve ass'y		1	–	–	–	–	–	–	–	–	–		
1	4091374	Cut-off valve ass'y		–	1	–	–	–	–	–	–	–	–		
1	4091376	Cut-off valve ass'y		–	–	1	1	–	–	–	–	–	–		
1	4091378	Cut-off valve ass'y		–	–	–	–	1	1	1	1	1	1		
2	4091373	Valve body		1	–	–	–	–	–	–	–	–	–		
2	4091375	Valve body		–	1	–	–	–	–	–	–	–	–		
2	4091377	Valve body		–	–	1	1	–	–	–	–	–	–		
2	4091379	Valve body		–	–	–	–	1	1	1	1	1	1		
3	50.48027.0	Cut-off bar		1	–	–	–	–	–	–	–	–	–		
3	50.48028.0	Cut-off bar		–	1	–	–	–	–	–	–	–	–		
3	50.48029.0	Cut-off bar		–	–	1	–	–	–	–	–	–	–		
3	50.48030.0	Cut-off bar		–	–	–	1	–	–	–	–	–	–		
4	50.42515.1	Spool		1	1	1	1	1	1	1	1	1	1		
5	50.28059.1a	Lock nut		1	1	1	1	1	1	1	1	1	1		
6	50.57514.1	Adjusting screw		1	1	1	1	1	1	1	1	1	1		
7	50.44046.3	Pressure spring		1	1	1	1	1	1	1	1	1	1	2	
8		Steel ball		1	1	1	1	1	1	1	1	1	1		
9		Steel ball		1	1	1	1	1	1	1	1	1	1		
10		Bolt		1	1	1	1	1	1	1	1	1	1		
11		Seal		1	1	1	1	1	1	1	1	1	1		

LAPIS SERVICES INC
(219)-464-9131
Amada Support, Rebuilds,
Sales and Fanuc Control Upgrade
AUTHORIZED CNC SYSTEM INTEGRATOR
FANUC

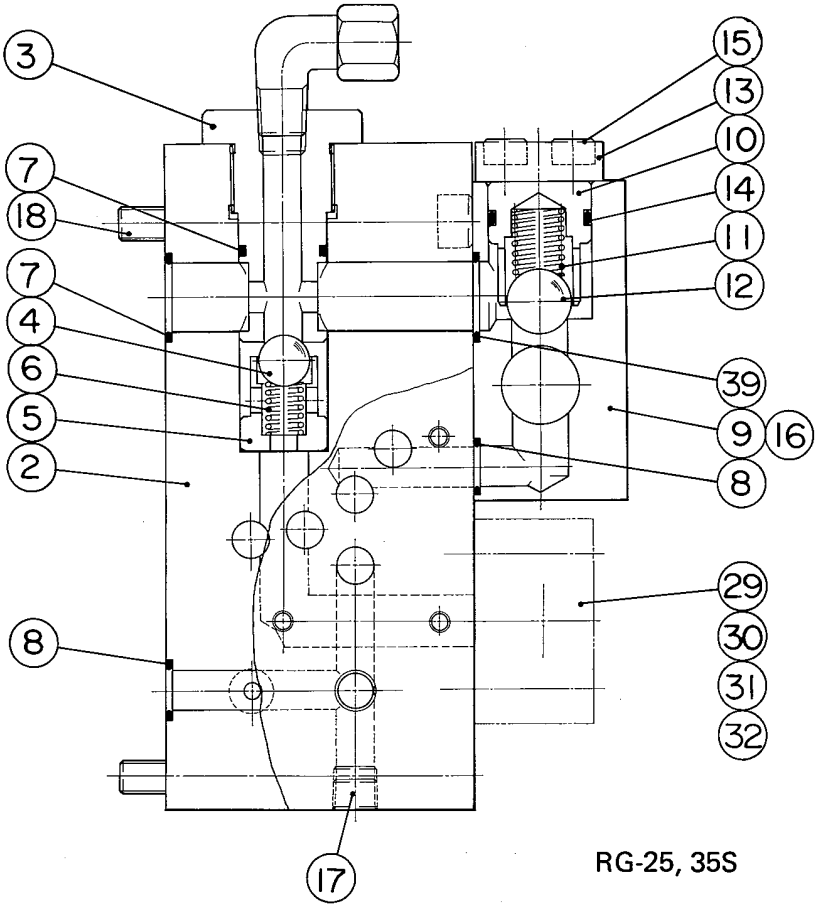

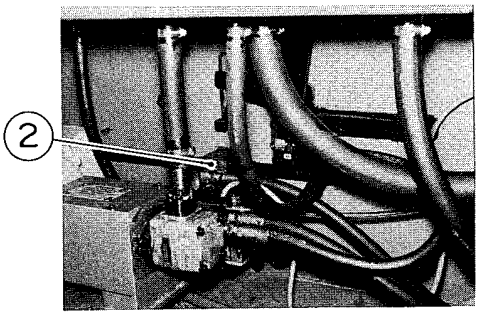

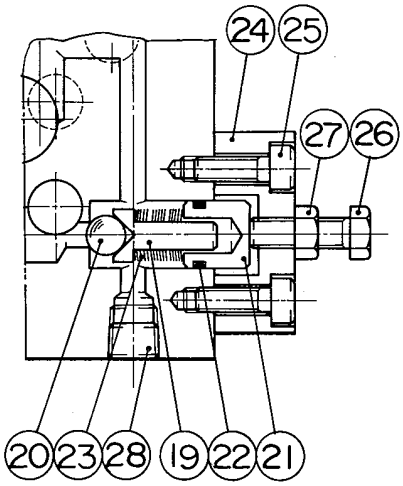

RG-25, 35S

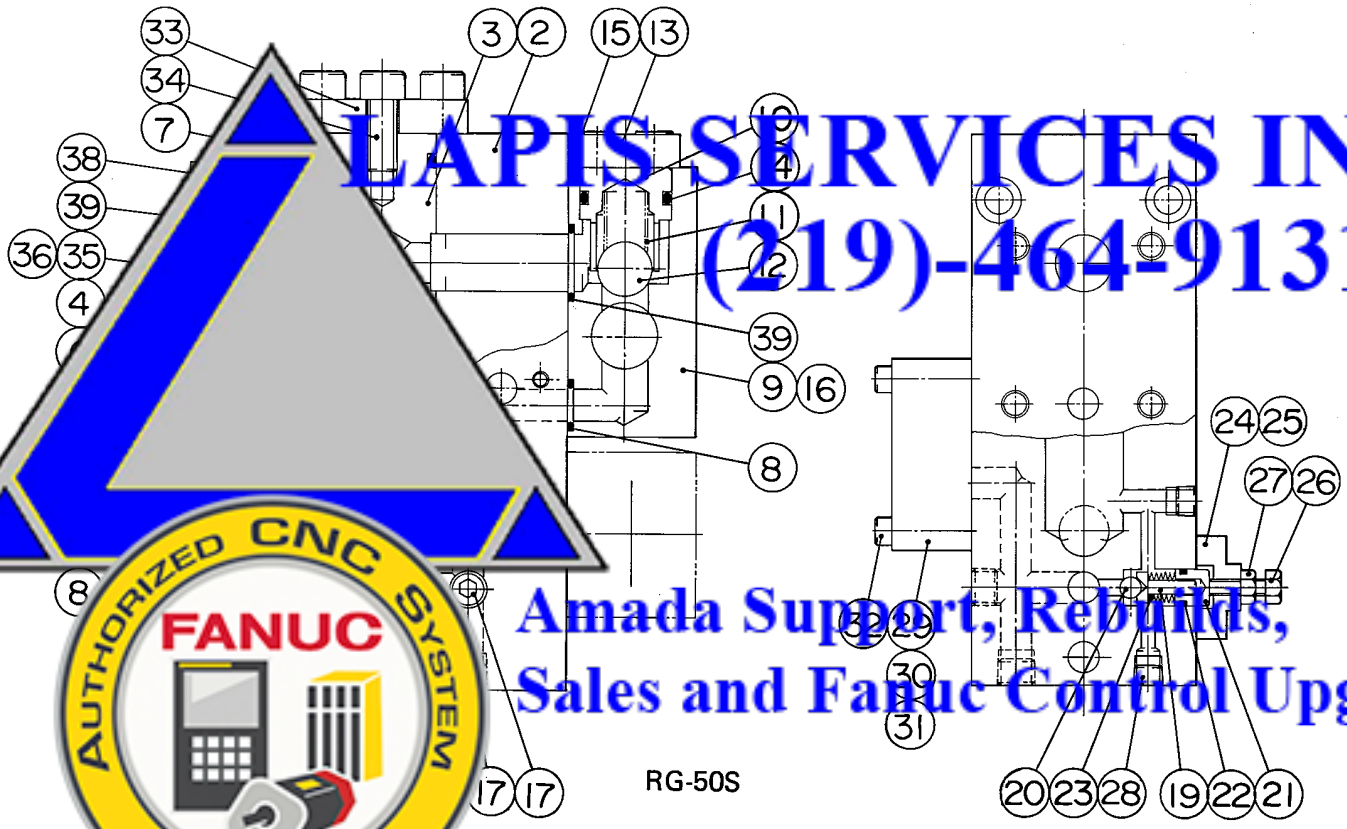

RG-50S

LAPIS SERVICES INC
(219)-464-9131
Amada Support, Rebuilds,
Sales and Fanuc Control Upgrade
AUTHORIZED CNC SYSTEM
FANUC
INTEGRATOR

Index No.	Drawing No.	Parts Name	Type	Q'ty										Class	Note
				25	35S	50S	50	80S	80	100S	100	100L	125		
1	4096341a	Check valve ass'y		1	1	–	–	–	–	–	–	–	–		
1	4123081	Check valve (III) ass'y		–	–	1	–	–	–	–	–	–	–		
2	4096342	Valve body		1	1	–	–	–	–	–	–	–	–		
2	4123082	Valve body		–	–	1	–	–	–	–	–	–	–		
3	4041577	Valve seat		1	1	–	–	–	–	–	–	–	–		
3	4123083	Valve seat		–	–	1	–	–	–	–	–	–	–		
4		Steel ball	15^{ϕ}	1	1	–	–	–	–	–	–	–	–		
4		Steel ball	1″	–	–	1	–	–	–	–	–	–	–		
5	4041578	Ball guide		1	1	–	–	–	–	–	–	–	–		
5	4123084	Ball guide		–	–	1	–	–	–	–	–	–	–		
6	4041579	Spring		1	[illegible]	[illegible]	[illegible]	[illegible]	[illegible]	[illegible]	[illegible]	[illegible]	[illegible]	2	
6	4047506	Spring		[illegible]	[illegible]	[illegible]	[illegible]	[illegible]	[illegible]	[illegible]	[illegible]	[illegible]	[illegible]	2	
7		O-ring		1	1	–	–	–	–	–	–	–	–	1	
7		O-ring		–	–	1	–	–	–	–	–	–	–	1	
8		O-ring		2	2	3	–	–	–	–	–	–	–	1	
9	4096343	Block		1	1	1	–	–	–	–	–	–	–		
10	4045946b	Ball guide		1	1	1	–	–	–	–	–	–	–		
11	4047294a	Spring		1	1	1	–	–	–	–	–	–	–	2	
12		Steel ba[illegible]		1	1	1	–	–	–	–	–	–	–		
13	4045947	Cap[illegible]		1	1	1	–	–	–	–	–	–	–		
14		O[illegible]		1	1	1	–	–	–	–	–	–	–	1	
15		Cap screw		4	[illegible]	4	–	–	–	–	–	–	–		
16		Cap screw		4	4	4	–	–	–	–	–	–	–		
17		Plug		2	2	2	–	–	–	–	–	–	–		
18		Cap screw		3	3	–	–	–	–	–	–	–	–		
18		Cap screw		–	–	3	–	–	–	–	–	–	–		
19	4095480	Ball support		1	1	1	–	–	–	–	–	–	–		
20		Steel ball		1	1	1	–	–	–	–	–	–	–		

LAPIS SERVICES INC
(219)-464-9131
Amada Support, Rebuilds,
Sales and Fanuc Control Upgrade
AUTHORIZED CNC SYSTEM INTEGRATOR
FANUC

Index No.	Drawing No.	Parts Name	Type	Q'ty										Class	Note
				25	35S	50S	50	80S	80	100S	100	100L	125		
21	4096345	Spool		1	1	1	–	–	–	–	–	–	–		
22		O-ring	1BP-10	1	1	1	–	–	–	–	–	–	–	1	
23		Cone disk spring	R-11	13	13	13	–	–	–	–	–	–	–	2	
24	4096344a	Cap		1	1	1	–	–	–	–	–	–	–		
25		Cap screw	M5 x 15	4	4	4	–	–	–	–	–	–	–		
26		Bolt	M6 x 20	1	1	1	–	–	–	–	–	–	–		
27		Nut	M6 type 3	1	1	1	–	–	–	–	–	–	–		
28		Plug	PT 1/8"	1	1	2	–	–	–	–	–	–	–		
29	4095483	Cap		1	1	1	–	–	–	–	–	–	–		
30		Plug	PT 3/8"	1	1	1	–	–	–	–	–	–	–		
31		O-ring	P-[illegible]	[illegible]	[illegible]	[illegible]	–	–	–	–	–	–	–	1	
32		Cap screw	[illegible]5	[illegible]	[illegible]	[illegible]	–	–	–	–	–	–	–		
33	4043977	Cap		–	–	1	–	–	–	–	–	–	–		
34		Cap screw		–	–	5	–	–	–	–	–	–	–		
35	4123085	Block		–	–	1	–	–	–	–	–	–	–		
36		Cap screw		–	–	4	–	–	–	–	–	–	–		
37		O-ring		–	–	1	–	–	–	–	–	–	–	1	
38		Plug		–	–	1	–	–	–	–	–	–	–		
39		O-ring		2	2	2	–	–	–	–	–	–	–	1	

LAPIS SERVICES INC
(219)-464-9131
AUTHORIZED CNC SYSTEM FANUC INTEGRATOR
Amada Support, Rebuilds,
Sales and Fanuc Control Upgrade

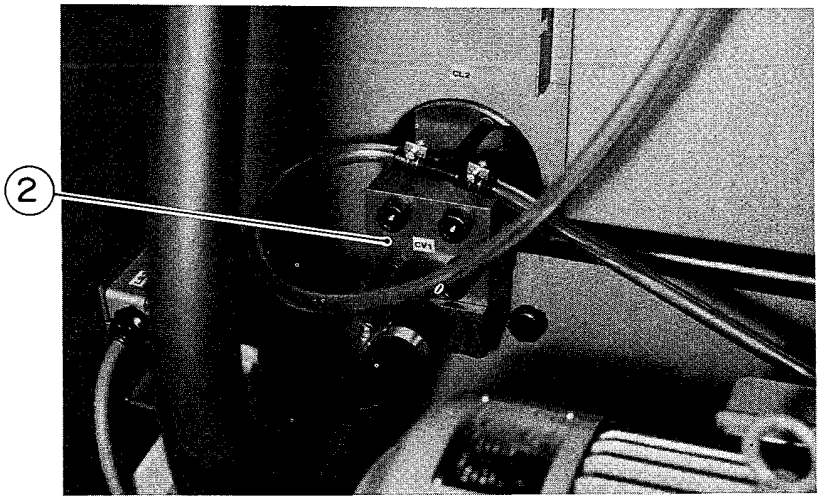

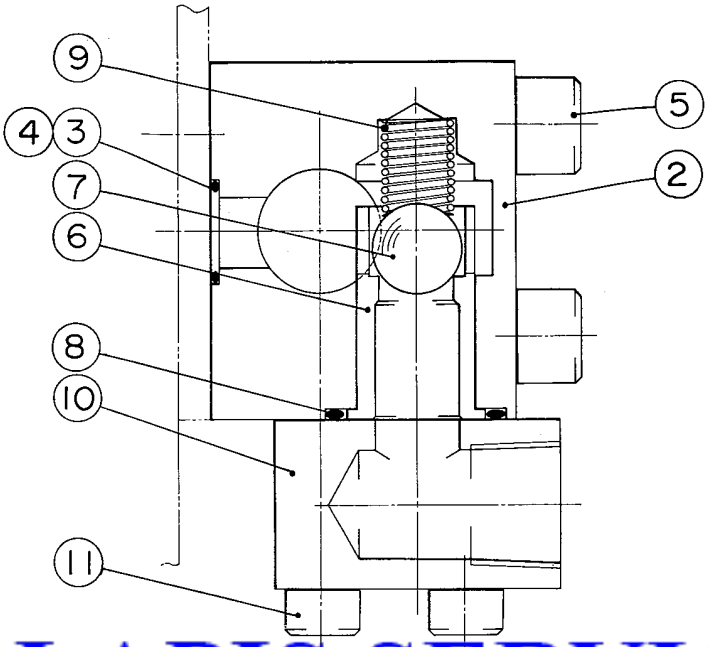

RG-50, 80S, 80

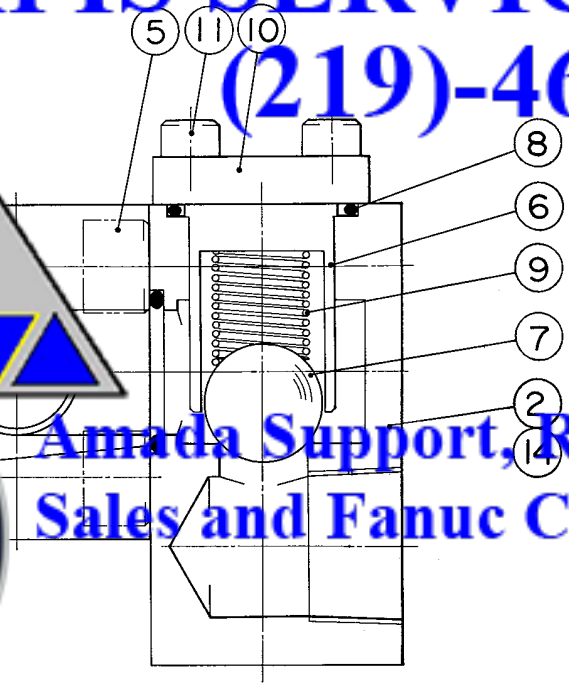

RG-100S, 100, 100L, 125

LAPIS SERVICES INC
(219)-464-9131
Amada Support, Rebuilds,
Sales and Fanuc Control Upgrade
AUTHORIZED CNC SYSTEM INTEGRATOR
FANUC

Index No.	Drawing No.	Parts Name	Type	Q'ty										Class	Note
				25	35S	50S	50	80S	80	100S	100	100L	125		
1	4045010b	Check valve (I) ass'y		–	–	–	1	1	1	–	–	–	–		
1	4047502a	Check valve (I) ass'y		–	–	–	–	–	–	1	1	1	1		
2	4045011b	Valve body		–	–	–	1	1	1	–	–	–	–		
2	4047504a	Valve body		–	–	–	–	–	–	1	1	1	1		
3		O-ring	1BP-22	–	–	–	1	1	1	1	1	1	1	1	
4		O-ring	1BP-26	–	–	–	2	2	2	2	2	2	2	1	
5		Cap screw	M14 × 80	–	–	–	4	4	4	–	–	–	–		
5		Cap screw	M14 × 60	–	–	–	–	–	–	4	4	4	4		
6	4045012c	Ball guide		–	–	–	1	1	1	–	–	–	–		
6	4047505	Ball guide		–	–	–	–	–	–	1	1	1	1		
7		Steel ball	φ						1	–	–	–	–		
7		Steel ball		–	–	–	–	–	–	1	–	–	1		
8		O-ring		–	–	–	1	1	1	–	–	–	–	1	
8		O-ring		–	–	–	–	–	–	1	–	–	1	1	
9	4047294	Spring		–	–	–	1	1	1	–	–	–	–	2	
9	4047506	Spring		–	–	–	–	–	–	1	1	1	1	2	
10	4045013	Valve cap		–	–	–	1	1	1	–	–	–	–		
10	4047507	Valve cap		–	–	–	–	–	–	1	1	1	1		
11		Cap sc		–	–	–	4	4	4	–	–	–	–		
11		Cap		–	–	–	–	–	–	4	4	4	4		
12	4047503	Block		–	–	–	–	–	–	1	1	1	1		
13		O-ring		–	–	–	–	–	–	1	1	1	1	1	
14		Cap screw		–	–	–	–	–	–	4	4	4	4		

LAPIS SERVICES INC
(219)-464-9131
Amada Support, Rebuilds,
Sales and Fanuc Control Upgrade
AUTHORIZED CNC SYSTEM INTEGRATOR
FANUC

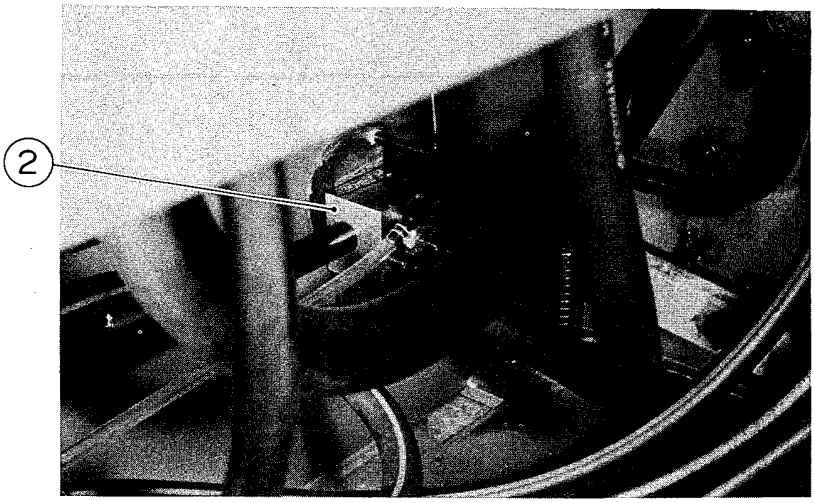

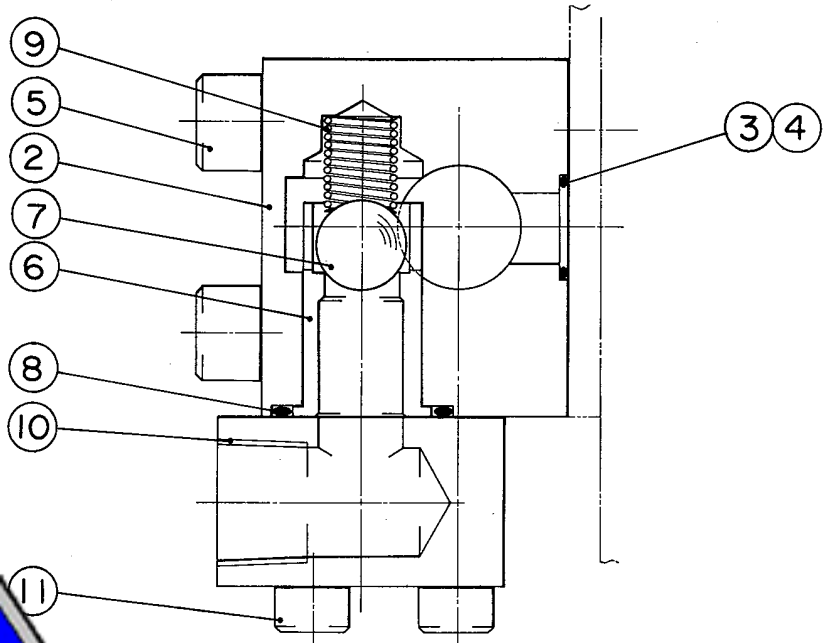

RG-50, 80S, 80

LAPIS SERVICES INC
(219)-464-9131

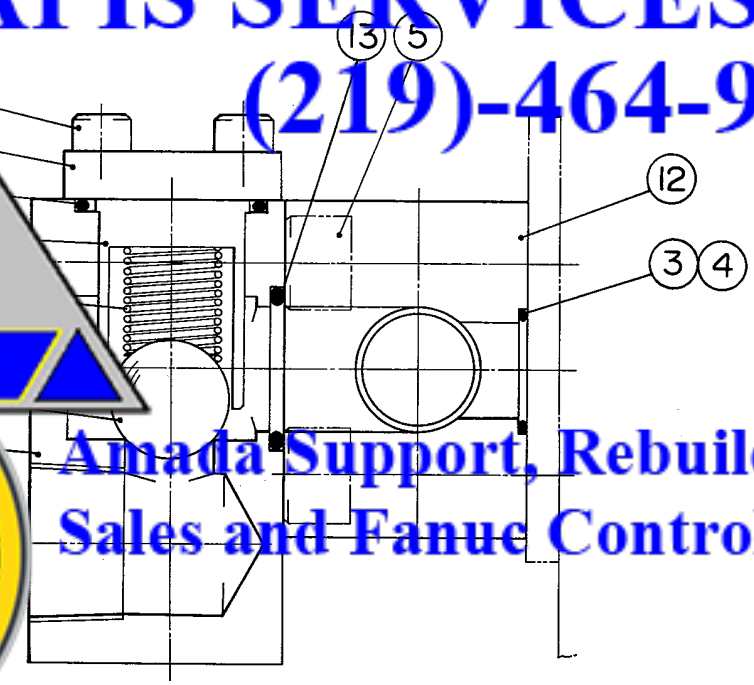

Amada Support, Rebuilds,
Sales and Fanuc Control Upgrade

RG-100S, 100, 100L, 125

Index No.	Drawing No.	Parts Name	Type	Q'ty										Class	Note
				25	35S	50S	50	80S	80	100S	100	100L	125		
1	4045014b	Check valve (II) ass'y		–	–	–	1	1	1	–	–	–	–		
1	4047508a	Check valve (II) ass'y		–	–	–	–	–	–	1	1	1	1		
2	4045015b	Valve body		–	–	–	1	1	1	–	–	–	–		
2	4047504a	Valve body		–	–	–	–	–	–	1	1	1	1		
3		O-ring	1BP-22	–	–	–	1	1	1	1	1	1	1	1	
4		O-ring	1BP-26	–	–	–	2	2	2	2	2	2	2	1	
5		Cap screw	M14 x 80	–	–	–	4	4	4	–	–	–	–		
5		Cap screw	M14 x 60	–	–	–	–	–	–	4	4	4	4		
6	4045012c	Ball guide		–	–	–	1	1	1	–	–	–	–		
6	4047505	Ball guide		–	–	–	–	–	–	1	1	1	1		
7		Steel ball	φ						1	–	–	–	–		
7		Steel ball		–	–	–	–	–	–	1	1	1	1		
8		O-ring		–	–	–	1	1	1	–	–	–	–	1	
8		O-ring		–	–	–	–	–	–	1	1	1	1	1	
9	4047294	Spring		–	–	–	1	1	1	–	–	–	–	2	
9	4047506	Spring		–	–	–	–	–	–	1	1	1	1	2	
10	4045013	Valve cap		–	–	–	1	1	1	–	–	–	–		
10	4047507	Valve cap		–	–	–	–	–	–	1	1	1	1		
11		Cap scr		–	–	–	4	4	4	–	–	–	–		
11		Cap		–	–	–	–	–	–	4	4	4	4		
12	4047509	B		–	–	–	–	–	–	1	1	1	1		
13		O-ring		–	–	–	–	–	–	1	1	1	1	1	
14		Cap screw		–	–	–	–	–	–	4	4	4	4		

LAPIS SERVICES INC
(219)-464-9131
Amada Support, Rebuilds,
Sales and Fanuc Control Upgrade
AUTHORIZED CNC SYSTEM INTEGRATOR
FANUC

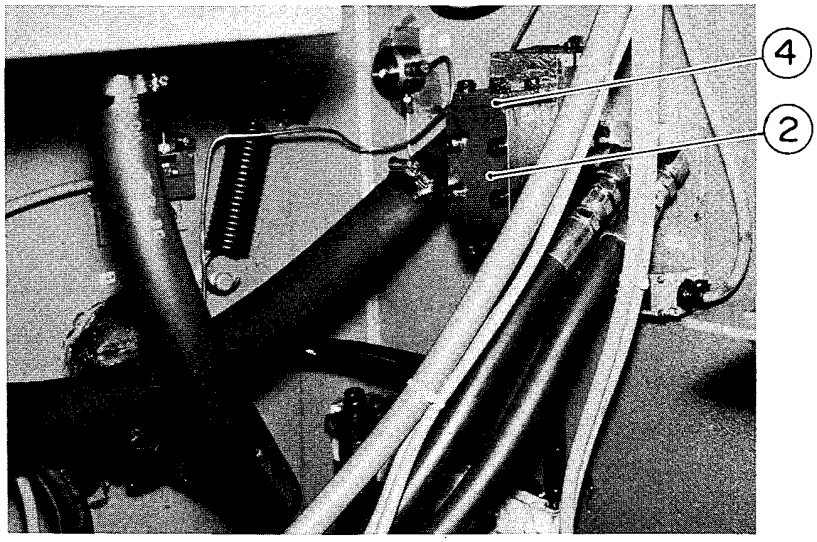

LAPIS SERVICES INC
(219)-464-9131
Amada Support, Rebuilds,
Sales and Fanuc Control Upgrade

Index No.	Drawing No.	Parts Name	Type	Q'ty										Class	Note
				25	35S	50S	50	80S	80	100S	100	100L	125		
1	4046173a	Check valve (III) ass'y		–	–	–	1	1	1	1	1	1	1		
2	4043995	Valve body		–	–	–	1	1	1	1	1	1	1		
3	4043996	Ball guide		–	–	–	1	1	1	1	1	1	1		
4	4043997	Valve cap		–	–	–	1	1	1	1	1	1	1		
5		Steel ball	28^{ϕ}	–	–	–	1	1	1	1	1	1	1		
6		O-ring	1BP-26	–	–	–	1	1	1	1	1	1	1	1	
7		O-ring	1BP-32	–	–	–	1	1	1	1	1	1	1	1	
8		Cap screw	M10 x 25	–	–	–	4	4	4	4	4	4	4		
9		Cap screw	M10 x 75	–	–	–	4	4	4	4	4	4	4		
10		Cap screw	M10 x 20	–	–	–	1	1	1	1	1	1	1		

LAPIS SERVICES INC
(219)-464-9131
Amada Support, Rebuilds,
Sales and Fanuc Control Upgrade
AUTHORIZED CNC SYSTEM
FANUC
INTEGRATOR

Unit No. 22

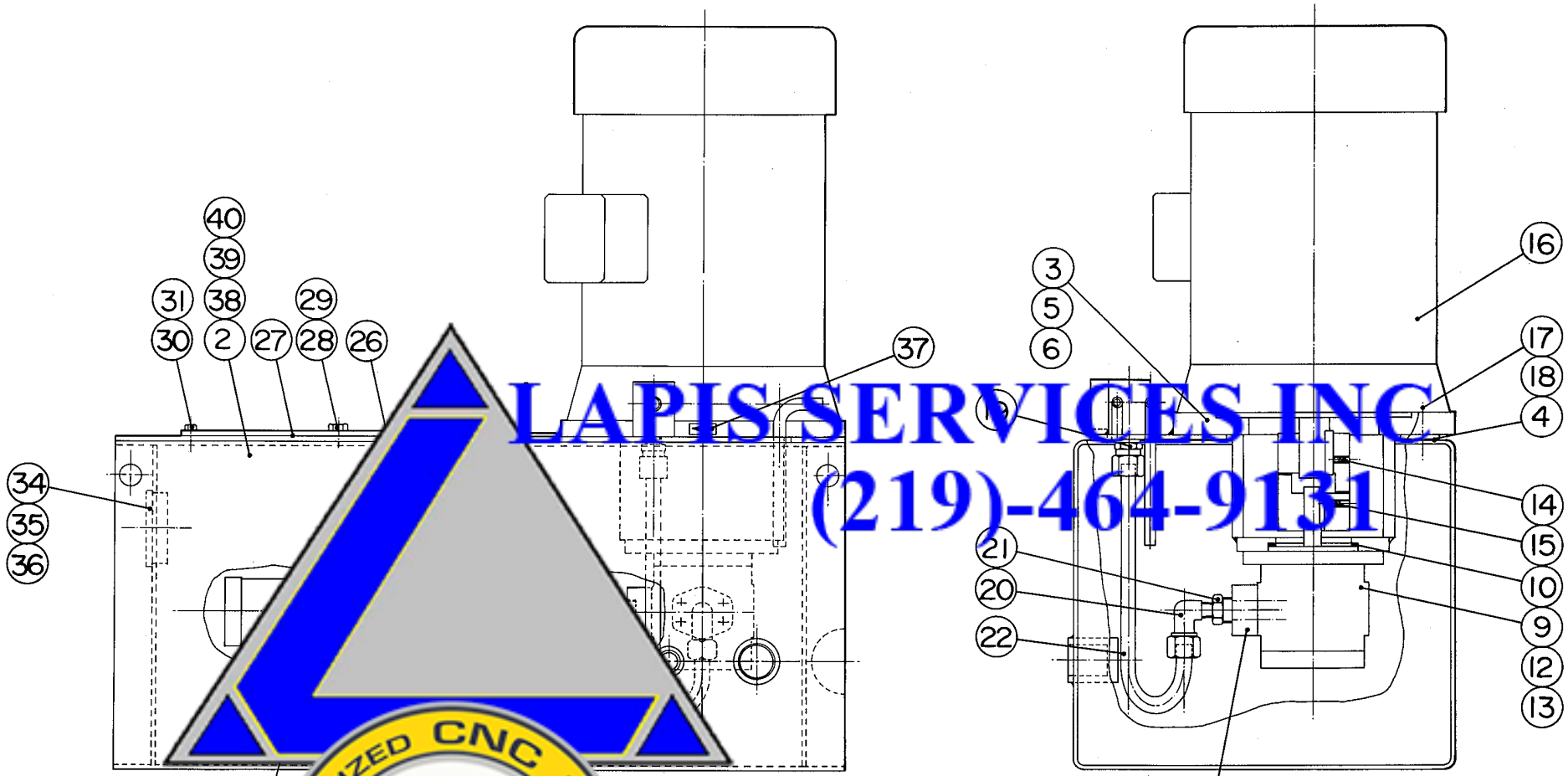

LAPIS SERVICES INC
(219)-464-9131
Amada Support, Rebuilds,
Sales and Fanuc Control Upgrade
AUTHORIZED CNC SYSTEM INTEGRATOR
FANUC

Index No.	Drawing No.	Parts Name	Type	Q'ty										Class	Note
				25	35S	50S	50	80S	80	100S	100	100L	125		
1	4121366	Pump unit		1	–	–	–	–	–	–	–	–	–		
1	4121367	Pump unit		–	1	–	–	–	–	–	–	–	–		
1	4124562	Pump unit		–	–	1	–	–	–	–	–	–	–		
2	4099090a	Tank		1	1	–	–	–	–	–	–	–	–		
2	4098346b	Tank		–	–	1	–	–	–	–	–	–	–		
3	4099091b	Tank cover		1	–	–	–	–	–	–	–	–	–		
3	4099148a	Tank cover		–	1	–	–	–	–	–	–	–	–		
3	4098350c	Tank cover		–	–	1	–	–	–	–	–	–	–		
4	4099101	Packing		1	1	–	–	–	–	–	–	–	–		
4	4098363	Packing		–	–	1	–	–	–	–	–	–	–		
5		Bolt	6 × 2	[illegible]	[illegible]	[illegible]	[illegible]	[illegible]	[illegible]	[illegible]	[illegible]	[illegible]	[illegible]		
5		Bolt	0	[illegible]	[illegible]	2	[illegible]	[illegible]	[illegible]	[illegible]	[illegible]	[illegible]	[illegible]		
6		Washer		9	9	12	–	–	–	–	–	–	–		
7		Eye bolt		3	3	[illegible]	[illegible]	[illegible]	[illegible]	[illegible]	[illegible]	[illegible]	[illegible]		
8		Nut		3	3	–	–	–	–	–	–	–	–		
9		Pump	A	1	1	–	–	–	–	–	–	–	–	3	
9		Pump		–	–	1	–	–	–	–	–	–	–	3	
10	4098362	Packing		1	1	1	–	–	–	–	–	–	–	1	
11		Flange		1	1	2	–	–	–	–	–	–	–		
12		Bolt		2	2	2	–	–	–	–	–	–	–		
13		W		2	2	2	–	–	–	–	–	–	–		
14	4099100	Coupling		1	[illegible]	[illegible]	[illegible]	[illegible]	[illegible]	[illegible]	[illegible]	[illegible]	–		
14	4098357	Coupling		–	–	1	–	–	–	–	–	–	–		
15		Set screw (cup		[illegible]	4	[illegible]	[illegible]	[illegible]	[illegible]	[illegible]	[illegible]	[illegible]	[illegible]		
15		Set screw (cup		–	–	4	–	–	–	–	–	–	–		
16		Motor	4P 230/400/460V	1	–	–	–	–	–	–	–	–	–	3	
16		Motor	4P 230/400/460V	–	1	–	–	–	–	–	–	–	–	3	
16		Motor	kW 4P 230/400/460V	–	–	1	–	–	–	–	–	–	–	3	

LAPIS SERVICES INC
(219)-464-9131
Amada Support, Rebuilds,
Sales and Fanuc Control Upgrade
AUTHORIZED CNC SYSTEM INTEGRATOR
FANUC

Index No.	Drawing No.	Parts Name	Type	Q'ty										Class	Note
				25	35S	50S	50	80S	80	100S	100	100L	125		
17		Bolt	M10 x 30	4	–	–	–	–	–	–	–	–	–		
17		Bolt	M12 x 35	–	4	–	–	–	–	–	–	–	–		
17		Bolt	M12 x 30	–	–	4	–	–	–	–	–	–	–		
18		Washer	M10	4	–	–	–	–	–	–	–	–	–		
18		Washer	M12	–	4	4	–	–	–	–	–	–	–		
19		Pipe fitting (nipple type)	A-1/8B-PT 1/4"	1	1	–	–	–	–	–	–	–	–		
19		Pipe fitting (nipple type)	A-1/4B-PT 1/4"	–	–	1	–	–	–	–	–	–	–		
20		Pipe fitting (elbow type)	B-1/8B-PT 1/4"	1	1	–	–	–	–	–	–	–	–		
20		Pipe fitting (elbow type)	B-1/4B-PT 1/4"	–	–	1	–	–	–	–	–	–	–		
21		Bushing	UT-1/2" x 1/4"	1	1	–	–	–	–	–	–	–	–		
22	4099106a	Pipe		1	[illegible]	[illegible]	[illegible]	[illegible]	[illegible]	[illegible]	[illegible]	[illegible]	[illegible]		
22	4098358a	Pipe		–	[illegible]	[illegible]	[illegible]	[illegible]	[illegible]	[illegible]	[illegible]	[illegible]	[illegible]		
23	4041627	Suction pipe		1	1	–	–	–	–	–	–	–	–		
23	4098359	Pipe		–	–	1	–	–	–	–	–	–	–		
24		Male-female elbow		1	1	–	–	–	–	–	–	–	–		
25		Suction filter	2"	1	1	–	–	–	–	–	–	–	–	2	
25		Suction filter		–	–	1	–	–	–	–	–	–	–	2	
26	4099096	Cover		1	1	–	–	–	–	–	–	–	–		
26	4098360a	Cover		–	–	1	–	–	–	–	–	–	–		
27	4099102	Packi		1	1	–	–	–	–	–	–	–	–	1	
27	4098361a	Pa		–	–	1	–	–	–	–	–	–	–	1	
28		Bolt		1	[illegible]	[illegible]	[illegible]	[illegible]	[illegible]	[illegible]	[illegible]	[illegible]	–		
28		Bolt		–	–	1	–	–	–	–	–	–	–		
29		Nut		2	[illegible]	[illegible]	[illegible]	[illegible]	[illegible]	[illegible]	[illegible]	[illegible]	[illegible]		
29		Nut		–	–	2	–	–	–	–	–	–	–		
30		Cap screw		4	4	–	–	–	–	–	–	–	–		
30		Bolt		–	–	4	–	–	–	–	–	–	–		
31		Washer		4	4	–	–	–	–	–	–	–	–		

LAPIS SERVICES INC
(219)-464-9131
Amada Support, Rebuilds,
Sales and Fanuc Control Upgrade
AUTHORIZED CNC SYSTEM INTEGRATOR FANUC

Index No.	Drawing No.	Parts Name	Type	Q'ty										Class	Note
				25	35S	50S	50	80S	80	100S	100	100L	125		
31		Washer	M6	–	–	4	–	–	–	–	–	–	–		
32	4095623	Caution plate		1	1	–	–	–	–	–	–	–	–		
33		Screw rivet	$1.8^{\phi} \times 4.8$	4	4	–	–	–	–	–	–	–	–		
34		Oil level gauge	OLG-40	1	1	1	–	–	–	–	–	–	–	3	
35	383118	Support		1	1	1	–	–	–	–	–	–	–		
36		Pan head machine screw	M6 x 8	3	3	3	–	–	–	–	–	–	–		
37	AS-K1001	Sticker (rotation)		1	1	1	–	–	–	–	–	–	–		
38		Cap screw	M10 x 10	4	4	–	–	–	–	–	–	–	–		
38		Cap screw	M10 x 15	–	–	4	–	–	–	–	–	–	–		
39		Spring washer	M10	4	4	4	–	–	–	–	–	–	–		
40		Washer	10	[illegible]	[illegible]	[illegible]	[illegible]	[illegible]	–	[illegible]	[illegible]	[illegible]	[illegible]		

LAPIS SERVICES INC
(219)-464-9131
Amada Support, Rebuilds,
Sales and Fanuc Control Upgrade
AUTHORIZED CNC SYSTEM INTEGRATOR FANUC

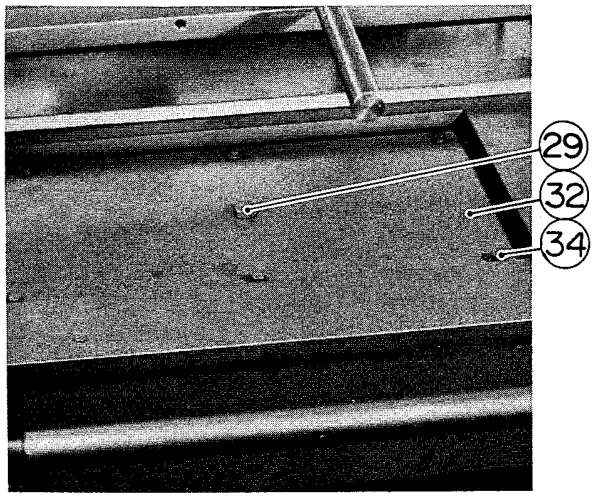

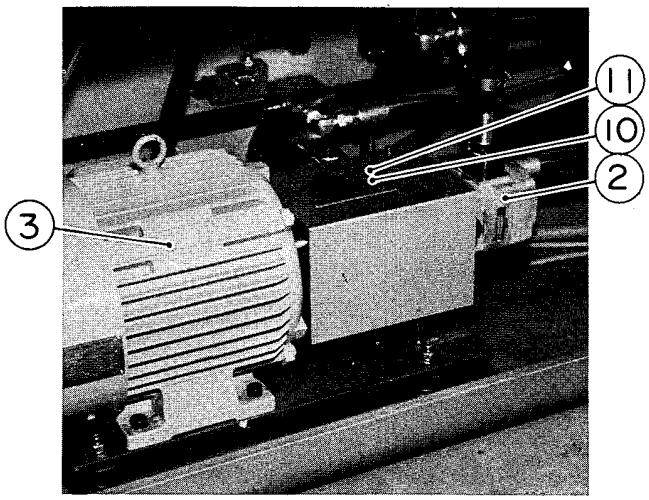

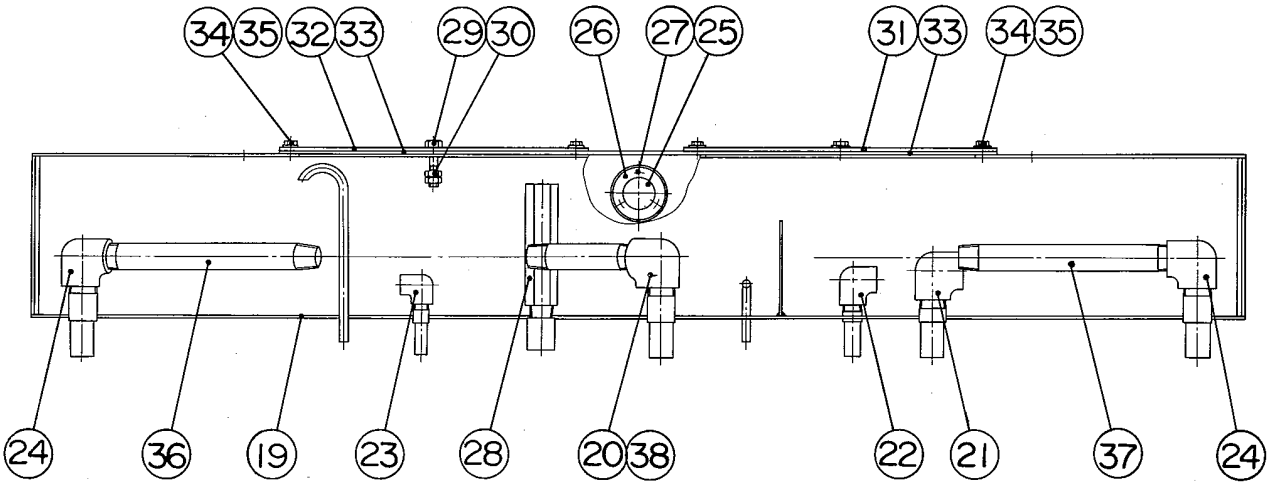

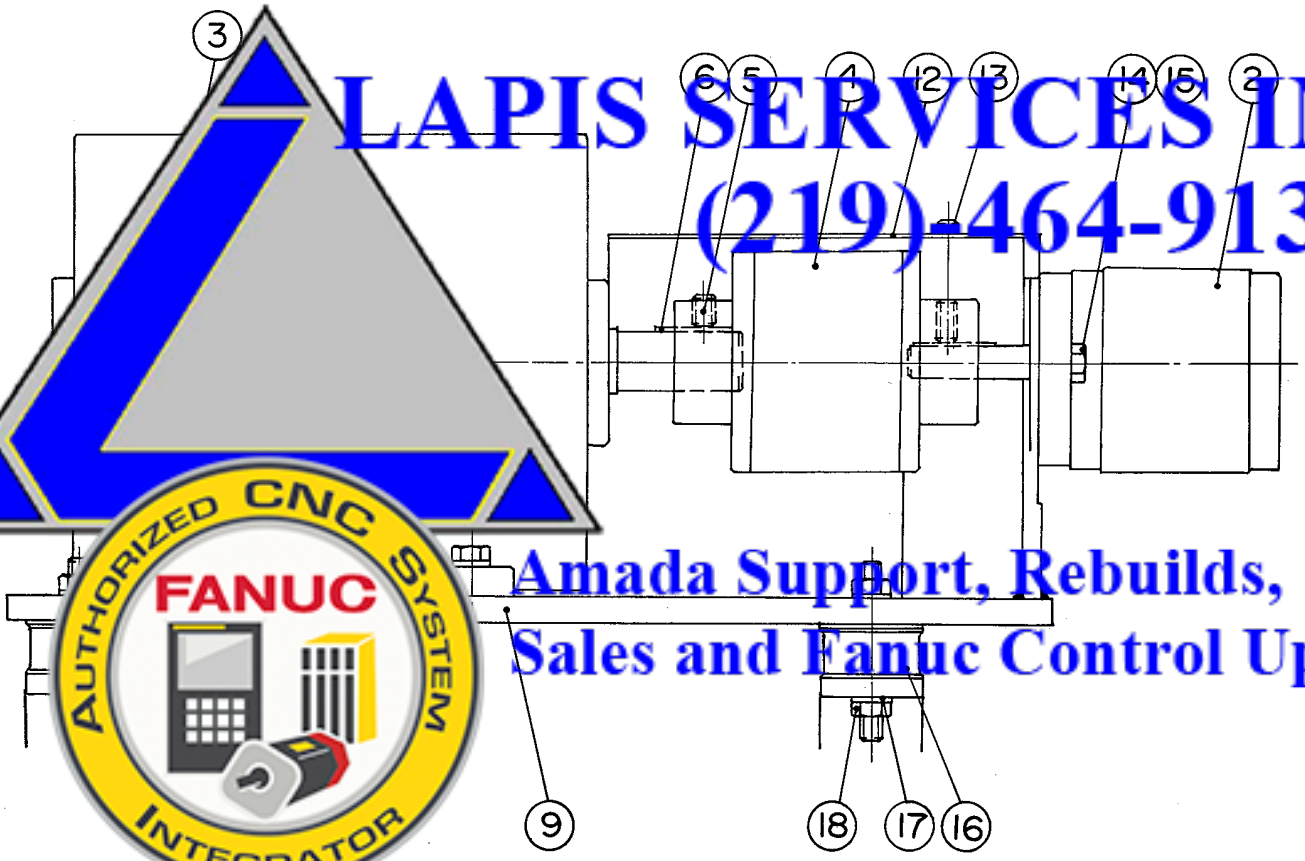

LAPIS SERVICES INC
(219)-464-9131
Amada Support, Rebuilds,
Sales and Fanuc Control Upgrade
AUTHORIZED CNC SYSTEM
FANUC
INTEGRATOR

Index No.	Drawing No.	Parts Name	Type	Q'ty										Class	Note
				25	35S	50S	50	80S	80	100S	100	100L	125		
1	4095518	Pump unit		–	–	–	1	–	–	–	–	–	–		
1	4095519	Pump unit		–	–	–	–	1	1	–	–	–	–		
1	4096330	Pump unit		–	–	–	–	–	–	1	1	1	–		
1	4097138	Pump unit		–	–	–	–	–	–	–	–	–	1		
2		Pump	IPH-2B-8-3235A	–	–	–	1	1	1	–	–	–	–	3	
2		Pump	IPH-3B-10-3343A	–	–	–	–	–	–	1	1	1	–	3	
2		Pump	IPH-3B-13-3343A	–	–	–	–	–	–	–	–	–	1	3	
3		Motor	MLA1115A 3.7kW 4P 230/400/460V	–	–	–	1	–	–	–	–	–	–	3	
3		Motor	MLA2133A 5.5kW 4P 230/400/460V	–	–	–	–	1	1	–	–	–	–	3	
3		Motor	MLA2135A 7.5kW 4P 230/400/460V	–	–	–	–	–	–	1	1	1	–	3	
3		Motor	A2[illegible]5A 11k[illegible] 4P 2[illegible]0/[illegible]00[illegible]60V	–	–	–	–	–	–	–	–	–	1	3	
4	4092669	Coupling		–	–	–	1	–	–	–	–	–	–		
4	4092806	Coupling		–	–	–	–	1	1	–	–	–	–		
4	4092818	Coupling		–	–	–	–	–	–	1	1	1	–		
4	4092810	Coupling		–	–	–	–	–	–	–	–	–	1		
5		Set screw (cup e		–	–	–	2	2	2	2	2	2	2		
6		Key		–	–	–	1	–	–	–	–	–	–		
6		Key		–	–	–	–	1	1	1	1	1	–		
6		Key		–	–	–	–	–	–	–	–	–	1		
7		Bolt		–	–	–	4	–	–	–	–	–	–		
7		Bolt		–	–	–	–	4	4	4	4	4	–		
7		Bolt		–	–	–	–	–	–	–	–	–	4		
8		Spring washer		–	–	–	4	4	4	4	4	4	–		
8		Spring washer		–	–	–	–	–	–	–	–	–	4		
9	4092667a	Motor base		–	–	–	1	–	–	–	–	–	–		
9	4092804	Motor base		–	–	–	–	1	1	–	–	–	–		
9	4092813	Motor base		–	–	–	–	–	–	1	1	1	–		
9	4092808	Motor base		–	–	–	–	–	–	–	–	–	1		

LAPIS SERVICES INC
(219)-464-9131
Amada Support, Rebuilds,
Sales and Fanuc Control Upgrade
AUTHORIZED CNC SYSTEM INTEGRATOR FANUC

Index No.	Drawing No.	Parts Name	Type	Q'ty										Class	Note
				25	35S	50S	50	80S	80	100S	100	100L	125		
10	4095623	Caution plate		–	–	–	1	1	1	1	1	1	1		
11		Screw rivet	$1.8^{\phi} \times 4.8$	–	–	–	4	4	4	4	4	4	4		
12	4092670a	Cover		–	–	–	1	–	–	–	–	–	–		
12	4092860a	Cover		–	–	–	–	1	1	–	–	–	–		
12	4092817a	Cover		–	–	–	–	–	–	1	1	1	–		
12	4092811a	Cover		–	–	–	–	–	–	–	–	–	1		
13		Cap screw	M6 x 10	–	–	–	2	2	2	2	2	2	2		
14		Bolt	M10 x 25	–	–	–	2	2	2	–	–	–	–		
14		Bolt	M10 x 35	–	–	–	–	–	–	2	2	2	–		
14		Bolt	M12 x 30	–	–	–	–	–	–	–	–	–	2		
15		Washer	10	[illegible]	[illegible]	[illegible]	[illegible]	[illegible]	2	2	2	2	[illegible]		
15		Washer		–	–	–	–	–	–	–	–	–	–		
16		Rubber cushion		–	–	–	4	4	4	4	4	4	4		
17		Washer		–	–	–	8	8	8	8	8	8	8		
18		Nut		–	–	–	8	8	8	8	8	8	8		
19	4125264	Tank		–	–	–	1	1	1	–	–	–	–		
19	4125265	Tank		–	–	–	–	–	–	1	1	1	–		
19	4125266	Tank		–	–	–	–	–	–	–	–	–	1		
20		Male-fe		–	–	–	1	1	1	–	–	–	–		
20		Elbo		–	–	–	–	–	–	1	1	1	1		
21		90		–	–	–	1	1	1	1	1	1	1		
22		90° elbow		[illegible]	[illegible]	[illegible]	1	1	1	1	1	1	1		
23		90° elbow		–	–	–	1	1	1	1	1	1	1		
24		90° elbow		[illegible]	[illegible]	[illegible]	2	2	2	[illegible]	[illegible]	[illegible]	[illegible]		
24		90° elbow		–	–	–	–	–	–	2	2	2	2		
25		Oil level gauge		–	–	–	1	1	1	1	1	1	1	3	
26	383118	Support		–	–	–	1	1	1	1	1	1	1		
27		Pan head machine s		–	–	–	3	3	3	3	3	3	3		

LAPIS SERVICES INC
(219)-464-9131
Amada Support, Rebuilds,
Sales and Fanuc Control Upgrade
AUTHORIZED CNC SYSTEM INTEGRATOR
FANUC

Index No.	Drawing No.	Parts Name	Type	Q'ty										Class	Note
				25	35S	50S	50	80S	80	100S	100	100L	125		
28	4040798	Drain plug		–	–	–	1	1	1	1	1	1	1		
29		Bolt	M10 x 50	–	–	–	1	1	1	1	1	1	1		
30		Nut	M10 type 3	–	–	–	2	2	2	2	2	2	2		
31	4091577	Cover		–	–	–	1	1	1	1	1	1	–		
31	4091584	Cover		–	–	–	–	–	–	–	–	–	1		
32	4091320	Cover		–	–	–	1	1	1	1	1	1	–		
32	4091319	Cover		–	–	–	–	–	–	–	–	–	1		
33	4091578a	Packing		–	–	–	2	2	2	2	2	2	–	1	
33	4091585	Packing		–	–	–	–	–	–	–	–	–	2	1	
34		Bolt	M6 x 10	–	–	–	12	12	12	12	12	12	12		
35		Washer		–	–	–	1	1	12	12	12	12	12		
36	4125270	Nipple		–	–	–	1	–	1	–	–	–	–		
36	4125271	Nipple		–	–	–	–	–	–	1	1	1	–		
36	4125337	Nipple		–	–	–	–	–	–	–	–	–	1		
37		Nipple		–	–	–	1	1	1	–	–	–	–		
37	4125271	Nipple		–	–	–	–	–	–	1	1	1	–		
37	4125272	Nipple		–	–	–	–	–	–	–	–	–	1		
38	4091592	Nipple		–	–	–	–	–	–	1	1	1	–		

LAPIS SERVICES INC
(219)-464-9131
Amada Support, Rebuilds,
Sales and Fanuc Control Upgrade
AUTHORIZED CNC SYSTEM INTEGRATOR FANUC

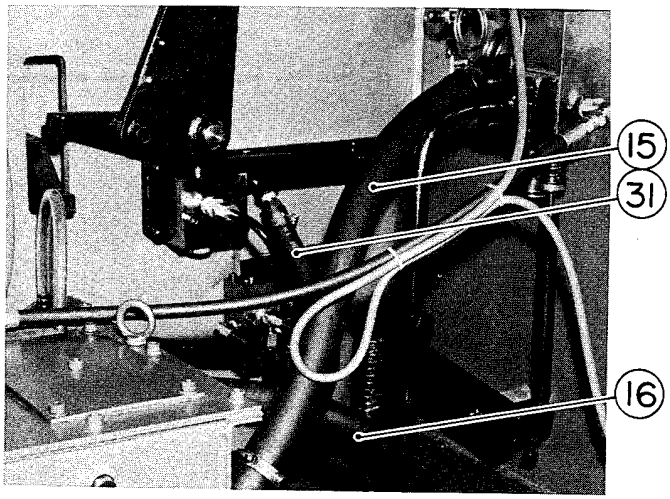

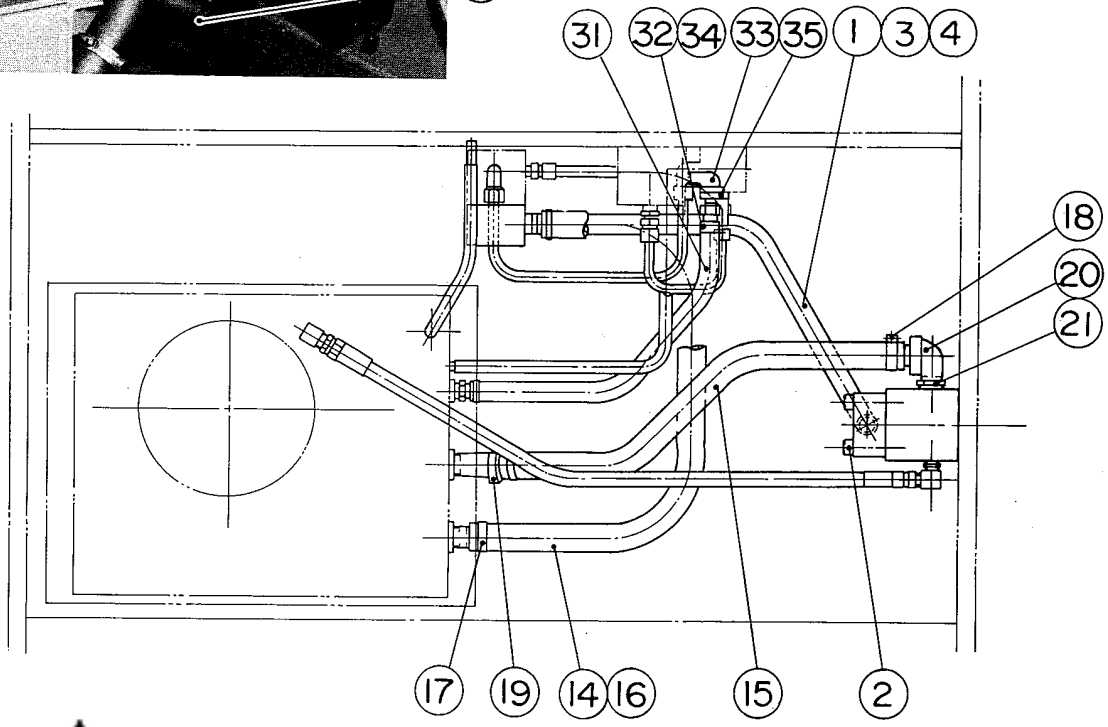

LAPIS SERVICES INC
(219)-464-9131
Amada Support, Rebuilds,
Sales and Fanuc Control Upgrade

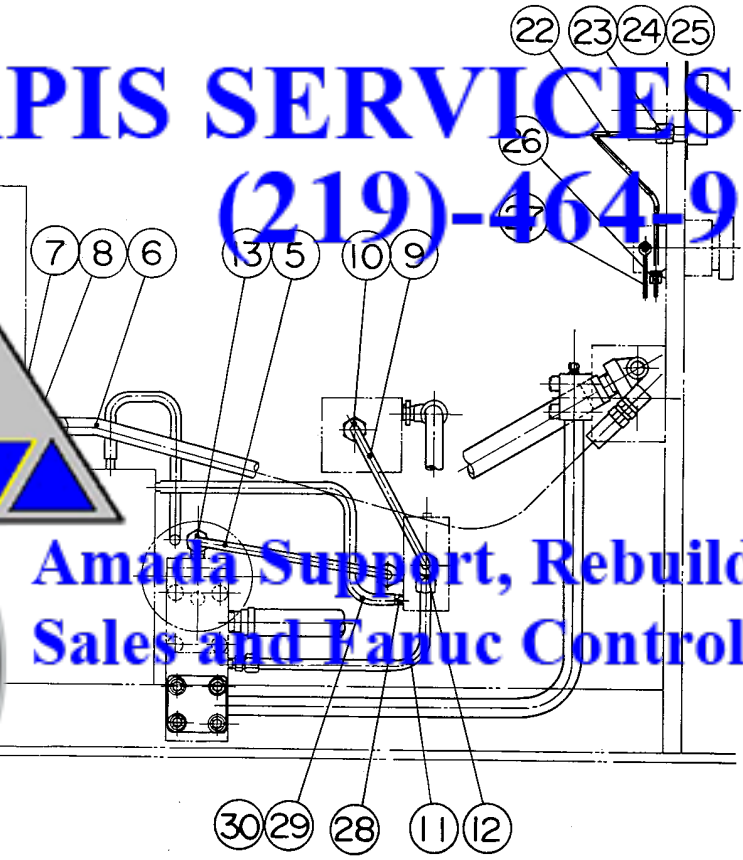

Index No.	Drawing No.	Parts Name	Type	Q'ty										Class	Note
				25	35S	50S	50	80S	80	100S	100	100L	125		
1	4096425	Pipe ass'y		1	1	–	–	–	–	–	–	–	–		
2		Cap screw	M10 x 50	8	8	–	–	–	–	–	–	–	–		
3		O-ring	1BP-18	1	1	–	–	–	–	–	–	–	–	1	
4		O-ring	1BP-26	1	1	–	–	–	–	–	–	–	–	1	
5	4096427	Pipe		1	1	–	–	–	–	–	–	–	–		
6		Rubber hose	H103EC03-04NPF 700ℓ	1	1	–	–	–	–	–	–	–	–	3	
7		90° elbow	3021J-04	2	2	–	–	–	–	–	–	–	–		
8		Bushing	BUT 1/2" x 1/4"	2	2	–	–	–	–	–	–	–	–		
9	4041654a	Pipe		1	1	–	–	–	–	–	–	–	–		
10		Pipe fitting	PA-1/8B-PT 1/4"	2	2	–	–	–	–	–	–	–	–		
11	4041655a	Pipe		[illegible]	[illegible]	–	–	–	–	–	–	–	–		
12		Tee	[illegible]B-PT 1/4	1	[illegible]	–	–	–	–	–	–	–	–		
13		Elbow	[illegible]-PT 1/4"	2	2	–	–	–	–	–	–	–	–		
14	560306a	Pipe support		4	4	–	–	–	–	–	–	–	–		
15		Gasoline hose		1	1	–	–	–	–	–	–	–	–	3	
16		MID oil hose		1	1	–	–	–	–	–	–	–	–	3	
17		Hose band		2	2	–	–	–	–	–	–	–	–		
18		Hose ban		2	2	–	–	–	–	–	–	–	–		
19		45° m		1	1	–	–	–	–	–	–	–	–		
20		90°		1	1	–	–	–	–	–	–	–	–		
21		Bushing		1	1	–	–	–	–	–	–	–	–		
22	4093921	Copper pipe		[illegible]	[illegible]	–	–	–	–	–	–	–	–		
23	4040849	Pipe fitting		1	1	–	–	–	–	–	–	–	–		
24	4040850	Nut		1	1	–	–	–	–	–	–	–	–		
25	4040851	Pipe fitting		1	1	–	–	–	–	–	–	–	–		
26		Connector		3	3	–	–	–	–	–	–	–	–		
27		Copper pipe		1	1	–	–	–	–	–	–	–	–	3	
28	4041661	Pipe support		2	2	–	–	–	–	–	–	–	–		

LAPIS SERVICES INC
(219)-464-9131
Amada Support, Rebuilds,
Sales and Fanuc Control Upgrade
AUTHORIZED CNC SYSTEM INTEGRATOR
FANUC

Index No.	Drawing No.	Parts Name	Type	Q'ty										Class	Note
				25	35S	50S	50	80S	80	100S	100	100L	125		
29		Vinyl tube	$10^{\phi} \times 13^{\phi} \times 400^{\ell}$	2	2	–	–	–	–	–	–	–	–	3	
30		Wire clamp	13^{ϕ}	4	4	–	–	–	–	–	–	–	–		
31		Gasoline hose	$15^{\phi} \times 500^{\ell}$	1	1	–	–	–	–	–	–	–	–	3	
32		Hose band	Jubilee 1A	2	2	–	–	–	–	–	–	–	–		
33		Male-female elbow	PT 3/8''	1	1	–	–	–	–	–	–	–	–		
34	4040863a	Hose support		2	2	–	–	–	–	–	–	–	–		
35		Bushing	1/2'' x 3/8''	1	1	–	–	–	–	–	–	–	–		

LAPIS SERVICES INC
(219)-464-9131
AUTHORIZED CNC SYSTEM FANUC INTEGRATOR
Amada Support, Rebuilds,
Sales and Fanuc Control Upgrade

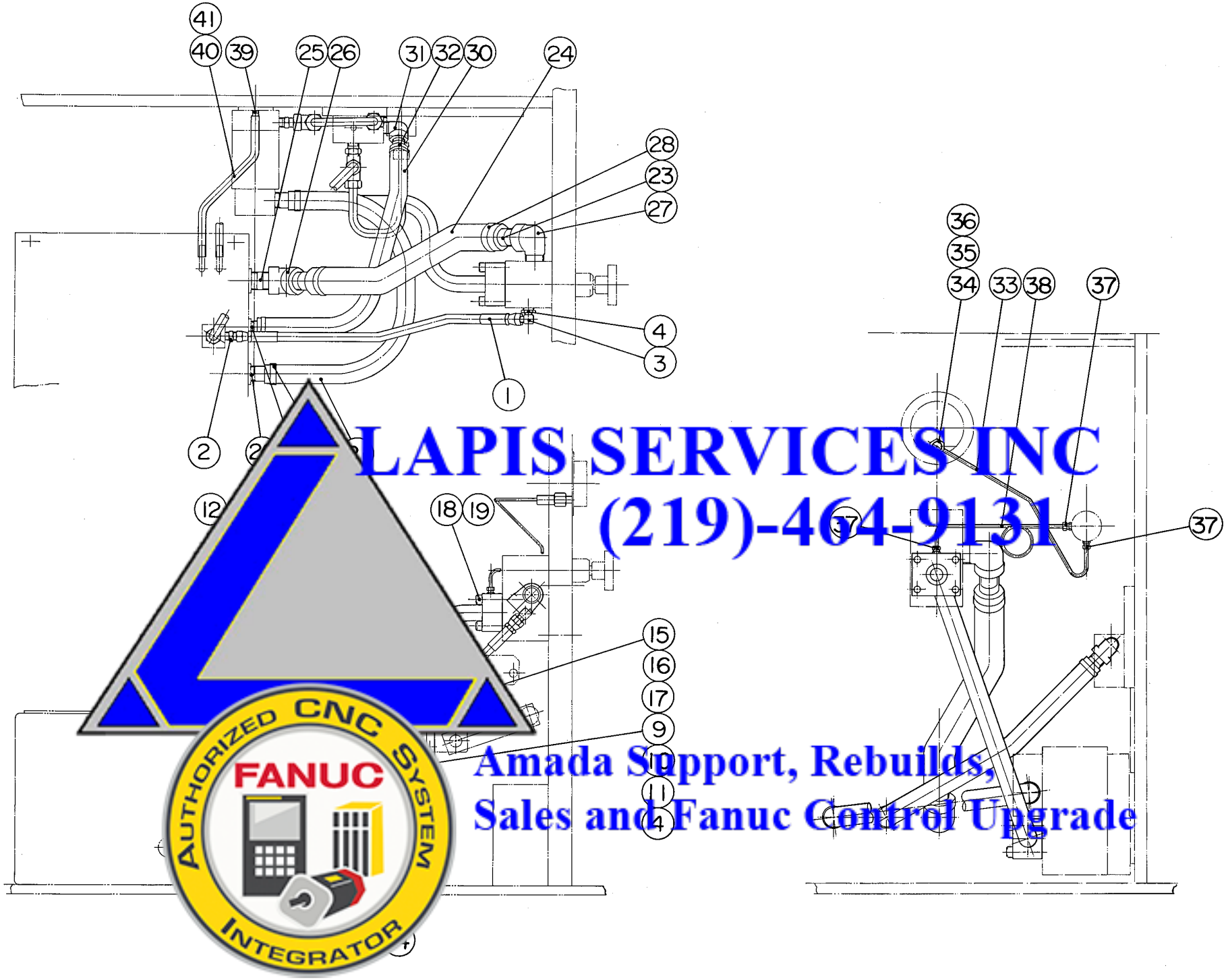
41
40
39
25
26
31
32
30
24
28
23
27
36
35
34
33
38
37
4
3
1
2
12
18
19
15
16
17
9
10
11
4
37
37
LAPIS SERVICES INC
(219)-464-9131
Amada Support, Rebuilds,
Sales and Fanuc Control Upgrade
AUTHORIZED CNC SYSTEM
FANUC
INTEGRATOR

Index No.	Drawing No.	Parts Name	Type	Q'ty										Class	Note
				25	35S	50S	50	80S	80	100S	100	100L	125		
1		Rubber hose	H104 EC04NPF 550ℓ	–	–	1	–	–	–	–	–	–	–	3	
2		Male-male adapter	3001F04	–	–	1	–	–	–	–	–	–	–		
3		90° elbow	3021F04	–	–	1	–	–	–	–	–	–	–		
4		Bushing	BUT 1/2" x 1/4"	–	–	2	–	–	–	–	–	–	–		
5		Rubber hose	H104 EC04NPF 700ℓ	–	–	1	–	–	–	–	–	–	–	3	
6		Male-male adapter	3001F04	–	–	1	–	–	–	–	–	–	–		
7		Male-female adapter	3005F04	–	–	1	–	–	–	–	–	–	–		
8		Stud	PSTD1/8B-PT 1/4"	–	–	2	–	–	–	–	–	–	–		
9	4123111	Pipe		–	–	1	–	–	–	–	–	–	–		
10		Nipple	PA-1/8B-PT 1/4"	–	–	1	–	–	–	–	–	–	–		
11		Tee	D-1/8B-PT 1/4"	–	–	[illegible]	–	–	–	–	–	–	–		
12	4123113	Pipe		–	–	1	–	–	–	–	–	–	–		
13		Elbow	B	–	–	1	–	–	–	–	–	–	–		
14		Elbow	PT 1/4"	–	–	[illegible]	–	–	–	–	–	–	–		
15	4123114	Pipe ass'y		–	–	1	–	–	–	–	–	–	–		
16		O-ring		–	–	1	–	–	–	–	–	–	–	1	
17		O-ring		–	–	1	–	–	–	–	–	–	–	1	
18		Cap screw		–	–	4	–	–	–	–	–	–	–		
19		Cap scr		–	–	4	–	–	–	–	–	–	–		
20	560306a	Pipe		–	–	2	–	–	–	–	–	–	–		
21		M		–	–	1	–	–	–	–	–	–	–	3	
22		Hose band		–	–	2	–	–	–	–	–	–	–		
23	561856b	Pipe support		–	–	2	–	–	–	–	–	–	–	3	
24		HP gasoline h		–	–	1	–	–	–	–	–	–	–	3	
25		Nipple		–	–	1	–	–	–	–	–	–	–		
26		Elbow		–	–	1	–	–	–	–	–	–	–		
27		Male-female elb		–	–	1	–	–	–	–	–	–	–		
28		Hose band		–	–	2	–	–	–	–	–	–	–		

LAPIS SERVICES INC
(219)-464-9131
Amada Support, Rebuilds,
Sales and Fanuc Control Upgrade
AUTHORIZED CNC SYSTEM INTEGRATOR FANUC

Index No.	Drawing No.	Parts Name	Type	Q'ty										Class	Note
				25	35S	50S	50	80S	80	100S	100	100L	125		
29	385997	Pipe support		–	–	2	–	–	–	–	–	–	–		
30		MID oil hose	$19^{\phi} \times 550^{\ell}$	–	–	1	–	–	–	–	–	–	–	3	
31		Male-female elbow	1/2"	–	–	1	–	–	–	–	–	–	–		
32		Hose band	Jubilee 1	–	–	2	–	–	–	–	–	–	–		
33	4093921	Copper pipe		–	–	1	–	–	–	–	–	–	–		
34	4040849	Pipe fitting		–	–	1	–	–	–	–	–	–	–		
35	4040850	Nut		–	–	1	–	–	–	–	–	–	–		
36	4040851	Pipe fitting		–	–	1	–	–	–	–	–	–	–		
37		Connector	KC4-PT 1/8"-S	–	–	3	–	–	–	–	–	–	–		
38		Copper pipe	$4^{\phi} \times 2^{\phi} \times 630^{\ell}$	–	–	1	–	–	–	–	–	–	–		
39	4041661	Pipe support		–	–	–	–	–	–	–	–	–	–		
40		Vinyl tube	$3^{\phi} \times 600$	–	–	–	–	–	–	–	–	–	–	3	
41		Wire clamp		–	–	4	–	–	–	–	–	–	–		

LAPIS SERVICES INC
(219)-464-9131
Amada Support, Rebuilds,
Sales and Fanuc Control Upgrade
AUTHORIZED CNC SYSTEM INTEGRATOR
FANUC

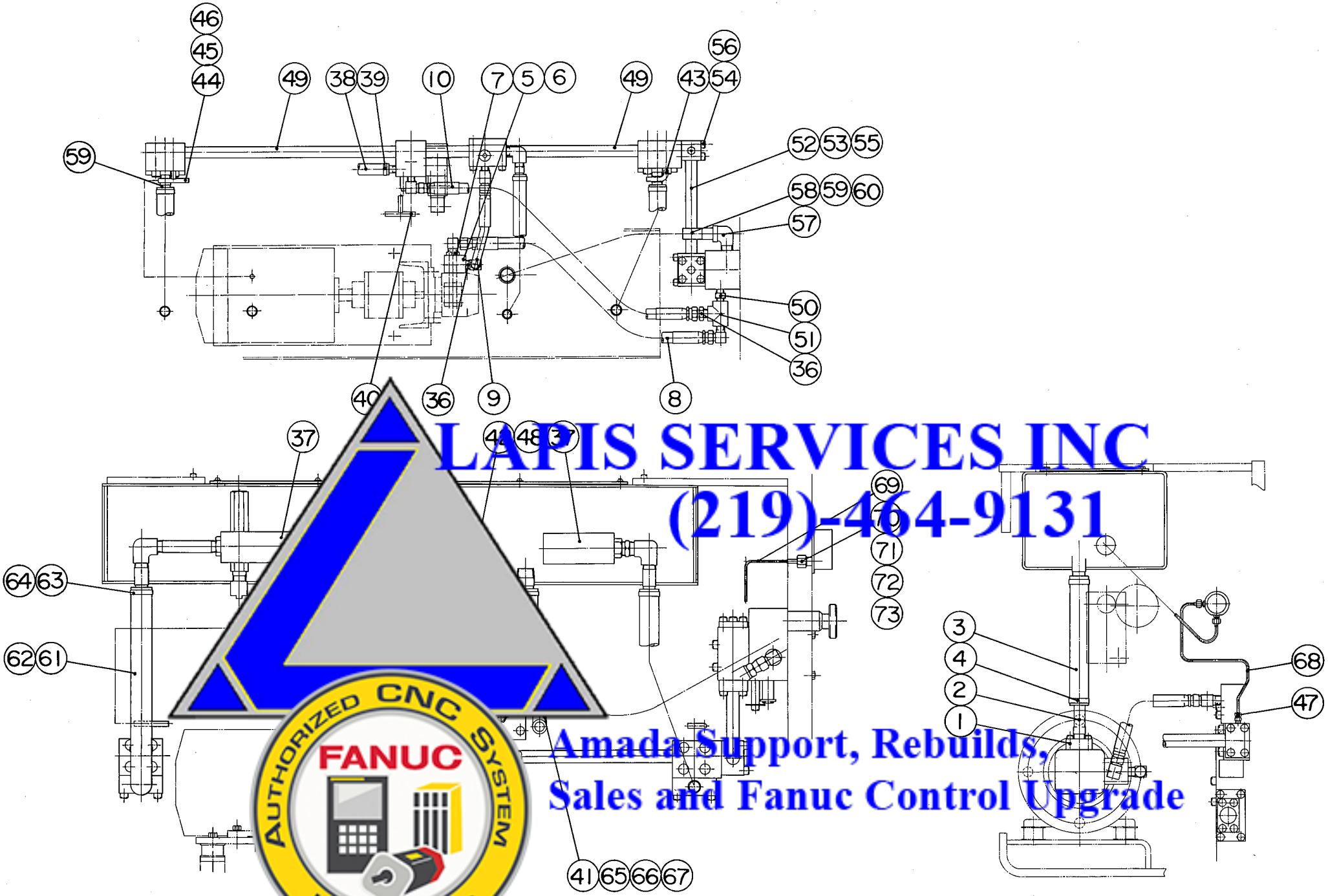

LAPIS SERVICES INC
(219)-464-9131
Amada Support, Rebuilds,
Sales and Fanuc Control Upgrade
AUTHORIZED CNC SYSTEM INTEGRATOR
FANUC

Index No.	Drawing No.	Parts Name	Type	Q'ty										Class	Note
				25	35S	50S	50	80S	80	100S	100	100L	125		
1		IN flange	IHF-2-10	–	–	–	1	1	1	–	–	–	–		
2	5091549	Pipe support		–	–	–	1	1	1	–	–	–	–		
3		MID oil hose	$25^{\phi} \times 300^{\ell}$	–	–	–	1	1	1	–	–	–	–	3	
4		Hose band	Jubilee 2A	–	–	–	2	2	2	–	–	–	–		
5	4040808a	Flange		–	–	–	1	1	1	–	–	–	–		
6		O-ring	1BP-22	–	–	–	1	1	1	–	–	–	–	1	
7		Cap screw	M8 x 55	–	–	–	4	4	4	–	–	–	–		
8		Rubber hose	J408 EC08NPF 700^{ℓ}	–	–	–	1	–	–	–	–	–	–	3	
8		Rubber hose	N708 EK08NPF 800^{ℓ}	–	–	–	–	1	1	–	–	–	–	3	
9		Rubber hose	J408 EC08NPF 270^{ℓ}	–	–	–	1	–	–	–	–	–	–	3	
9		Rubber hose	708 EK08NPF 80^{ℓ}	–	–	–	–	–	–	–	–	–	–	3	
9		Rubber hose	EK08NPF 10	–	–	–	–	–	1	–	–	–	–	3	
10		Rubber hose	08NPF 900^{ℓ}	–	–	–	1	–	–	–	–	–	–	3	
10		Rubber hose	8NPF 900^{ℓ}	–	–	–	–	1	–	–	–	–	–	3	
10		Rubber hose	PF 1150^{ℓ}	–	–	–	–	–	1	–	–	–	–	3	
11	4123969a	Main block as		–	–	–	1	1	1	–	–	–	–		
12	4123970	Block		–	–	–	1	1	1	–	–	–	–		
13		Plug		–	–	–	1	1	1	–	–	–	–		
14		Steel		–	–	–	1	1	1	–	–	–	–		
15	4095480	Ba		–	–	–	1	1	1	–	–	–	–		
16	4095481	Spool		–	–	–	1	1	1	–	–	–	–		
17		Cone disk sprin		–	–	–	13	13	13	–	–	–	–	2	
18	4095482	Cap		–	–	–	1	1	1	–	–	–	–		
19		O-ring		–	–	–	1	1	1	–	–	–	–	1	
20		Cap screw		–	–	–	4	4	4	–	–	–	–		
21		Bolt		–	–	–	1	1	1	–	–	–	–		
22		Nut		–	–	–	1	1	1	–	–	–	–		

LAPIS SERVICES INC
(219)-464-9131
Amada Support, Rebuilds,
Sales and Fanuc Control Upgrade
AUTHORIZED CNC SYSTEM FANUC INTEGRATOR

Index No.	Drawing No.	Parts Name	Type	Q'ty										Class	Note
				25	35S	50S	50	80S	80	100S	100	100L	125		
23		Plug	PT 1/8"	–	–	–	1	1	1	–	–	–	–		
24		Plug	PT 1/4"	–	–	–	1	1	1	–	–	–	–		
25		Plug	PT 3/8"	–	–	–	3	3	3	–	–	–	–		
26		O-ring	1BP-22	–	–	–	1	1	1	–	–	–	–	1	
27		O-ring	1BP-26	–	–	–	4	4	4	–	–	–	–	1	
28		O-ring	1BP-14	–	–	–	3	3	3	–	–	–	–	1	
29	4095483	Cap		–	–	–	1	1	1	–	–	–	–		
30		Plug	PT 3/8"	–	–	–	1	1	1	–	–	–	–		
31		Cap screw	M6 x 35	–	–	–	4	4	4	–	–	–	–		
32		O-ring	1BP-12	–	–	–	4	4	4	–	–	–	–	1	
33	4095476	Pipe support							1	–	–	–	–		
34		90° elbow	08				4	4	4	–	–	–	–		
35		Cap screw	5	–	–	–	6	6	6	–	–	–	–		
36		Adapter		–	–	–	2	2	2	–	–	–	–		
37		Strainer		–	–	–	3	3	3	–	–	–	–	2	
38		MID oil hose		–	–	–	1	1	1	–	–	–	–	3	
39		Hose band		–	–	–	2	2	2	–	–	–	–		
40	4095484	Tee		–	–	–	1	1	1	–	–	–	–		
41		Hose		–	–	–	2	2	2	–	–	–	–		
42		H		–	–	–	1	1	1	–	–	–	–		
43	50.54570.0	Drain pipe		–	–	–	1	1	1	–	–	–	–		
44	4040821	Tee		–	–	–	1	1	1	–	–	–	–		
45		Vinyl tube		–	–	–	1	1	1	–	–	–	–		
46		Wire clamp		–	–	–	6	6	6	–	–	–	–		
47		Connector		–	–	–	3	3	3	–	–	–	–		
48	4124732	Cap		–	–	–	1	1	1	–	–	–	–		
49	4044004	Pipe		–	–	–	2	2	–	–	–	–	–		

LAPIS SERVICES INC
(219)-464-9131
Amada Support, Rebuilds,
Sales and Fanuc Control Upgrade
AUTHORIZED CNC SYSTEM INTEGRATOR FANUC

Index No.	Drawing No.	Parts Name	Type	Q'ty										Class	Note
				25	35S	50S	50	80S	80	100S	100	100L	125		
49	4041588	Pipe		–	–	–	–	–	2	–	–	–	–		
50		Nipple	NS-PT 1/2"	–	–	–	1	1	1	–	–	–	–		
51		Tee	TEF-PT 1/2"	–	–	–	1	1	1	–	–	–	–		
52	4044653a	Pipe ass'y		–	–	–	1	1	–	–	–	–	–		
52	4125277	Pipe ass'y		–	–	–	–	–	1	–	–	–	–		
53		O-ring	1BG-30	–	–	–	1	1	1	–	–	–	–	1	
54		Cap screw	M10 x 35	–	–	–	4	4	4	–	–	–	–		
55		O-ring	1BP-26	–	–	–	1	1	1	–	–	–	–	1	
56		Cap screw	M10 x 60	–	–	–	4	4	4	–	–	–	–		
57		Male-female elbow	PT 1"	–	–	–	1	1	1	–	–	–	–		
58	4091550a	Pipe support		–	–	–	–	–	1	–	–	–	–		
59	560306a	Pipe support		–	–	–	1	–	1	–	–	–	–		
60		Gasoline hose	0ℓ	–	–	–	1	1	1	–	–	–	–	3	
61		MID oil hose		–	–	–	1	1	1	–	–	–	–	3	
62		MID oil hose		–	–	–	1	1	1	–	–	–	–	3	
63		Hose band		–	–	–	2	2	2	–	–	–	–		
64		Hose band		–	–	–	4	4	4	–	–	–	–		
65	385997	Pipe supp		–	–	–	1	1	1	–	–	–	–		
66		Male-fe		–	–	–	1	1	1	–	–	–	–		
67		MID		–	–	–	1	1	1	–	–	–	–	3	
68		C		–	–	–	1	1	–	–	–	–	–	3	
68		Copper pipe		–	–	–	–	–	1	–	–	–	–	3	
69	4093921	Copper pipe		–	–	–	1	1	1	–	–	–	–	3	
70	4040849	Pipe fitting		–	–	–	–	–	1	–	–	–	–		
71	4040850	Nut		–	–	–	1	1	1	–	–	–	–		
72	4040851	Pipe fitting		–	–	–	1	1	1	–	–	–	–		
73		Wire sticker		–	–	–	1	1	1	–	–	–	–		

LAPIS SERVICES INC
(219)-464-9131
Amada Support, Rebuilds,
Sales and Fanuc Control Upgrade
AUTHORIZED CNC SYSTEM INTEGRATOR
FANUC

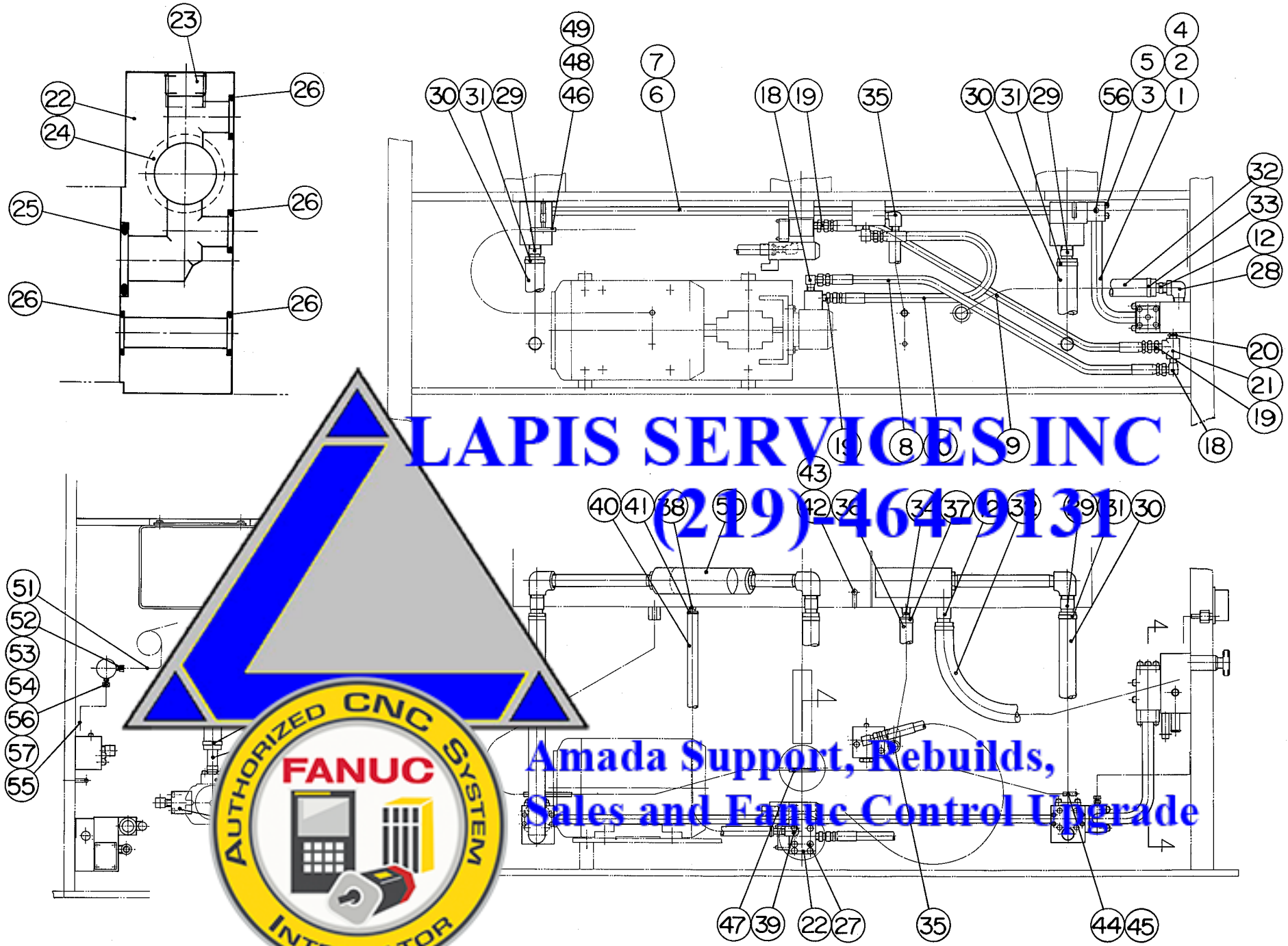

LAPIS SERVICES INC
(219)464-9131
Amada Support, Rebuilds,
Sales and Fanuc Control Upgrade
AUTHORIZED CNC SYSTEM
FANUC
INTEGRATOR

Index No.	Drawing No.	Parts Name	Type	Q'ty										Class	Note
				25	35S	50S	50	80S	80	100S	100	100L	125		
1	4044686b	Pipe ass'y		–	–	–	–	–	–	1	–	–	–		
1	4125278	Pipe ass'y		–	–	–	–	–	–	–	1	–	–		
1	4125279	Pipe ass'y		–	–	–	–	–	–	–	–	1	–		
1	4125280	Pipe ass'y		–	–	–	–	–	–	–	–	–	1		
2		O-ring	1BG-30	–	–	–	–	–	–	1	1	1	1	1	
3		Cap screw	M10 x 35	–	–	–	–	–	–	4	4	4	4		
4		O-ring	1BP-26	–	–	–	–	–	–	1	1	1	1	1	
5		Cap screw	M10 x 60	–	–	–	–	–	–	4	4	4	4		
6	4044688	Pipe		–	–	–	–	–	–	2	2	–	–		
6	4042773	Pipe		–	–	–	–	–	–	–	–	2	–		
6	4043757	Pipe		–	–	–	–	–	–	–	–	–	2		
7	4044754	Pipe clamp		–	–	–	–	–	–	–	–	2	–		
8		Rubber hose	K08-08NPF 1050ℓ	–	–	–	–	–	–	1	–	–	–	3	
8		Rubber hose	8-08NPF 1300ℓ	–	–	–	–	–	–	–	–	–	1	3	
8		Rubber hose	8NPF 1630ℓ	–	–	–	–	–	–	–	–	1	–	3	
9		Rubber hose	PF 1150ℓ	–	–	–	–	–	–	1	–	–	–	3	
9		Rubber hose	1350ℓ	–	–	–	–	–	–	–	1	–	1	3	
9		Rubber ho	630ℓ	–	–	–	–	–	–	–	–	1	–	3	
10		Rubber	ℓ	–	–	–	–	–	–	1	1	1	1	3	
11		IN fl		–	–	–	–	–	–	1	1	1	1		
12	4091550a	Pi		–	–	–	–	–	–	2	2	2	2		
13		MID oil hose		–	–	–	–	–	–	1	–	1	1	3	
14		Hose band		–	–	–	–	–	–	2	2	2	2		
15	4040808a	Flange		–	–	–	–	–	–	1	–	1			
16		O-ring		–	–	–	–	–	–	1	1	1	1	1	
17		Cap screw		–	–	–	–	–	–	4	4	4	4		
18		90° elbow		–	–	–	–	–	–	3	3	3	3		
19		Adapter		–	–	–	–	–	–	3	3	3	3		

LAPIS SERVICES INC
(219)-464-9131
Amada Support, Rebuilds,
Sales and Fanuc Control Upgrade
AUTHORIZED CNC SYSTEM FANUC INTEGRATOR

Index No.	Drawing No.	Parts Name	Type	Q'ty										Class	Note
				25	35S	50S	50	80S	80	100S	100	100L	125		
20		Nipple	NS-PT 1/2"	–	–	–	–	–	–	1	1	1	1		
21		Tee	TEF-PT 1/2"	–	–	–	–	–	–	1	1	1	1		
22	4096429	Block		–	–	–	–	–	–	1	1	1	–		
22	4097141	Block		–	–	–	–	–	–	–	–	–	1		
23		Plug	PT 3/8"	–	–	–	–	–	–	1	1	1	1		
24		O-ring	1BP-26	–	–	–	–	–	–	4	4	4	4	1	
25		O-ring	1BP-24	–	–	–	–	–	–	1	1	1	1	1	
26		O-ring	1BP-14	–	–	–	–	–	–	4	4	4	4	1	
27		Cap screw	M10 x 45	–	–	–	–	–	–	4	4	4	4		
28		Male-female elbow	T 1"	–	–	–	–	–	–	1	1	1	1		
29	561856b	Pipe support		–	–	–	–	–	–	2	2		2		
30		MID oil hose	00ℓ	–	–	–	–	–	–	2	2		2	3	
31		Hose band		–	–	–	–	–	–	4	4	4	4		
32		Gasoline hose		–	–	–	–	–	–	1	1	1	1	3	
33		Hose band		–	–	–	–	–	–	2	2	2	2		
34	385997	Pipe support		–	–	–	–	–	–	1	1	1	1		
35		Male-female el		–	–	–	–	–	–	1	1	1	1		
36		MID oil ho		–	–	–	–	–	–	1	1	1	1	3	
37		Hose ba		–	–	–	–	–	–	2	2	2	2		
38	4095476	Pipe		–	–	–	–	–	–	1	1	1	1		
39		Ma		–	–	–	–	–	–	1	1	1	1		
40		MID oil hose		–	–	–	–	–	–	1	1	1	1	3	
41		Hose band		–	–	–	–	–	–	2	2	2	2		
42	4124732	Cap		–	–	–	–	–	–	1	1	1	1		
43		Hose band		–	–	–	–	–	–	1	1	1	1		
44	4041661	Drain pipe		–	–	–	–	–	–	2	2	2	2		
45	4094705	Pipe		–	–	–	–	–	–	1	1	1	1		
46	4049129	Tee		–	–	–	–	–	–	1	1	1	1		

LAPIS SERVICES INC
(219)-464-9131
Amada Support, Rebuilds,
Sales and Fanue Control Upgrade
AUTHORIZED CNC SYSTEM INTEGRATOR
FANUC

Index No.	Drawing No.	Parts Name	Type	Q'ty										Class	Note
				25	35S	50S	50	80S	80	100S	100	100L	125		
47	4096430	Tee		–	–	–	–	–	–	1	1	1	1		
48		Vinyl tube	$10^{\phi} \times 13^{\phi} \times 3000^{\ell}$	–	–	–	–	–	–	1	1	1	1	3	
49		Wire clamp	13^{ϕ}	–	–	–	–	–	–	10	10	10	10		
50		Strainer	SFN-08	–	–	–	–	–	–	3	3	3	3	2	
51	4093921	Copper pipe		–	–	–	–	–	–	1	1	1	1	3	
52	4040849	Pipe fitting		–	–	–	–	–	–	1	1	1	1		
53	4040850	Nut		–	–	–	–	–	–	1	1	1	1		
54	4040851	Pipe fitting		–	–	–	–	–	–	1	1	1	1		
55		Copper pipe	$4^{\phi} \times 2^{\phi} \times 750^{\ell}$	–	–	–	–	–	–	1	1	1	1	3	
56		Connector	KC4-PT 1/8″-S	–	–	–	–	–	–	3	3	3	3		
57		Wire sticker	30	–	–	–	–	–	–	3	3	3	3		

LAPIS SERVICES INC
(219)-464-9131
Amada Support, Rebuilds,
Sales and Fanuc Control Upgrade
AUTHORIZED CNC SYSTEM INTEGRATOR
FANUC

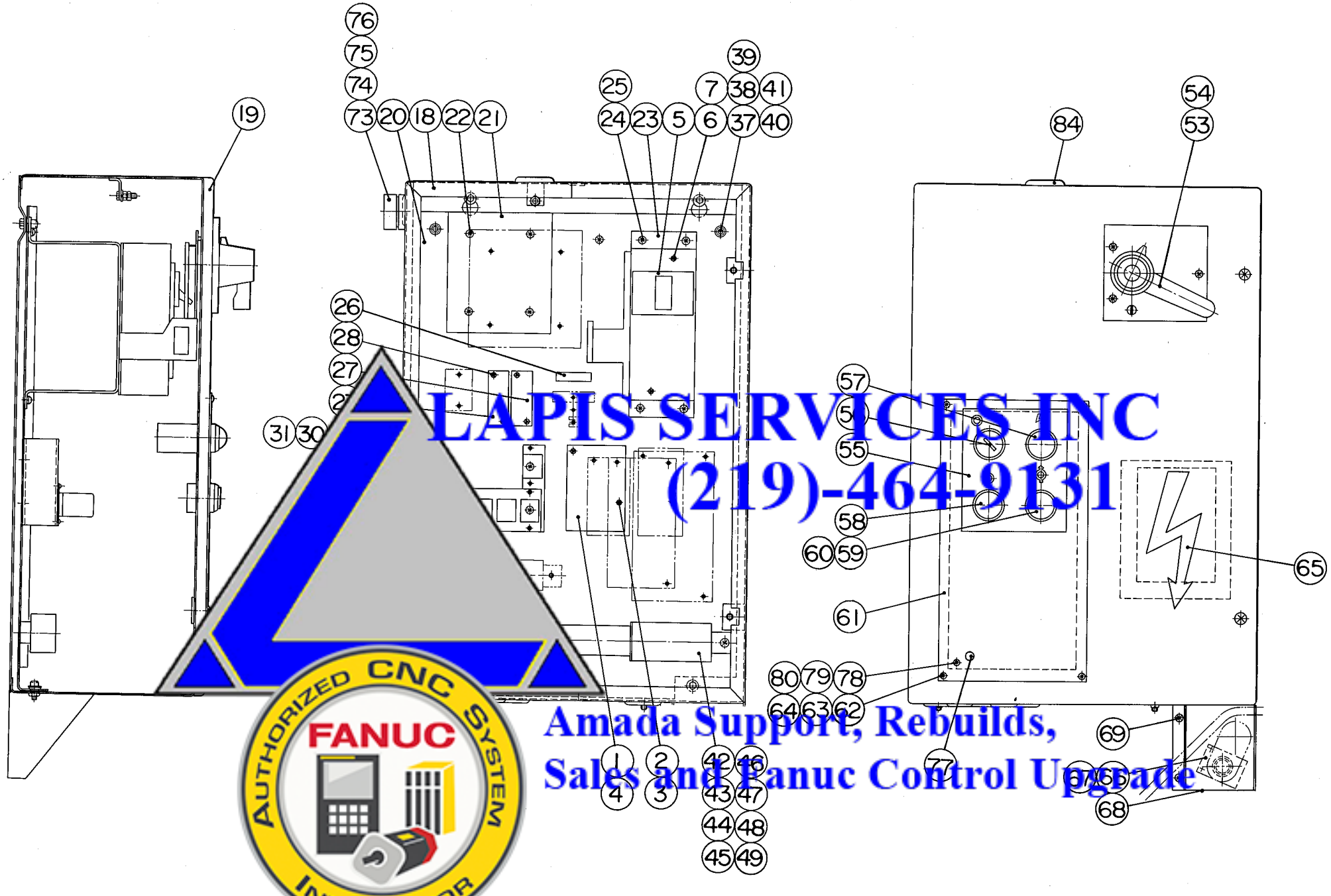

LAPIS SERVICES INC
(219)-464-9131
Amada Support, Rebuilds,
Sales and Fanuc Control Upgrade
AUTHORIZED CNC SYSTEM INTEGRATOR
FANUC

Index No.	Drawing No.	Parts Name	Type	Q'ty										Class	Note
				25	35S	50S	50	80S	80	100S	100	100L	125		
1		Magnet switch	SRC3931-5-1 AC100V 1.5kW	1	–	–	–	–	–	–	–	–	–	3	
1		Magnet switch	SRC3931-5-1 AC100V 2.2kW	–	1	–	–	–	–	–	–	–	–	3	
1		Magnet switch	SRC3931-5-1 AC100V 3.7kW	–	–	1	1	–	–	–	–	–	–	3	
1		Magnet switch	SRC3931-5-2 AC100V 5.5kW	–	–	–	–	1	1	–	–	–	–	3	
1		Magnet switch	SRC3931-2 AC100V 7.5kW	–	–	–	–	–	–	1	1	1	–	3	
1		Magnet switch	SW-3 AC100V 11kW	–	–	–	–	–	–	–	–	–	1	3	
2		Pan head machine screw	M4 x 8	2	–	–	–	2	2	2	3	3	–		
2		Pan head machine screw	M4 x 15	–	2	–	–	–	–	–	–	–	–		
2		Pan head machine screw	M4 x 20	–	–	2	2	–	–	–	–	–	–		
2		Pan head machine screw	M5 x 8	–	–	–	–	–	–	–	–	–	4		
3		Spring washer		2	[illegible]	[illegible]	[illegible]	2	2	2	3	[illegible]	–		
3		Spring washer		–	[illegible]	–	–	–	–	–	–	–	4		
4		Diode		2	2	2	2	2	2	2	2	2	1	3	
5		Non-fuse breaker	T[illegible]	1	[illegible]	–	–	–	–	–	–	–	–		
5		Non-fuse breaker		–	1	–	–	–	–	–	–	–	–		
5		Non-fuse breaker		–	–	1	1	1	1	1	1	1	–		
5		Non-fuse breal		–	–	–	–	–	–	–	–	–	1		
6		Pan head m		2	2	–	–	–	–	2	2	–	4		
6		Pan head		–	–	2	2	2	2	–	–	–	–		
6		Pan h		–	–	–	–	–	–	–	–	2	–		
7		Sp		2	2	2	2	2	2	2	2	–	4		
7		Spring washer		[illegible]	[illegible]	[illegible]	[illegible]	[illegible]	[illegible]	[illegible]	[illegible]	2	–		
8		Cable		1	1	1	1	–	–	–	–	–	–		
8		Cable		[illegible]	[illegible]	[illegible]	[illegible]	1	1	[illegible]	[illegible]	[illegible]	[illegible]		
8		Cable		–	–	–	–	–	–	1	1	1	–		
8		Cable		–	–	–	–	–	–	–	–	–	1		
9		Cable	w-green	1	1	1	1	–	–	–	–	–	–		
9		Cable	ellow-green	–	–	–	–	1	1	–	–	–	–		

LAPIS SERVICES INC
(219)-464-9131
Amada Support, Rebuilds,
Sales and Fanuc Control Upgrade
AUTHORIZED CNC SYSTEM INTEGRATOR FANUC

Index No.	Drawing No.	Parts Name	Type	Q'ty										Class	Note
				25	35S	50S	50	80S	80	100S	100	100L	125		
9		Cable	1V 8.0 mm^2 yellow-green	–	–	–	–	–	–	1	1	1	1		
10		Cable	1V 2.0 mm^2 black	1	1	1	1	–	–	–	–	–	–		
10		Cable	1V 3.5 mm^2 black	–	–	–	–	1	1	1	1	1	–		
10		Cable	1V 8.0 mm^2 black	–	–	–	–	–	–	–	–	–	1		
11		Cable	1V 2.0 mm^2 yellow-green	1	1	1	1	–	–	–	–	–	–		
11		Cable	1V 3.5 mm^2 yellow-green	–	–	–	–	1	1	1	1	1	–		
12		Cable	1V 1.25 mm^2 red	1	1	1	1	1	1	1	1	1	1		
13		Cable	VCT 3-core 1.25 mm^2	1	1	1	1	1	1	1	1	1	1		
14		Saddle	CH-19	1	1	1	1	1	1	1	1	1	–		
15		Flexible tube	PF-19	1	1	1	1	1	1	1	1	1	–		
15		Flexible tube	F-3	[illegible]	[illegible]	[illegible]	[illegible]	[illegible]	[illegible]	[illegible]	[illegible]	[illegible]	1		
16		Connector	9	2	2	2	2	[illegible]	2	2	[illegible]	2	–		
16		Connector		–	–	–	–	–	–	–	–	–	2		
17		Nut	9	1	1	1	1	1	1	1	1	1	–		
17		Nut		–	–	–	–	–	–	–	–	–	1		
18	4123960	Electrical box		1	1	1	1	1	1	1	1	1	–		
18	4124235	Electrical bo		–	–	–	–	–	–	–	–	–	1		
19	4123963a	Door		1	1	1	1	1	1	1	1	1	–		
19	4124236	Door		–	–	–	–	–	–	–	–	–	1		
20	4123964b	App		1	1	1	1	1	1	1	1	1	–		
20	4124237	A		–	–	–	–	–	–	–	–	–	1		
21		Transformer		1	1	1	1	1	1	1	1	1	–		
21		Transformer		–	–	–	–	–	–	–	–	–	1		
22		Pan head mac		4	4	4	4	4	4	4	4	4	–		
22		Pan head mac		–	–	–	–	–	–	–	–	–	4		
23	4123966	Breaker base		1	1	1	1	1	1	1	1	1	–		
23	4124233	Breaker base		–	–	–	–	–	–	–	–	–	1		
24		Pan head machine s		4	4	4	4	4	4	4	4	4	–		

LAPIS SERVICES INC
(219)-464-9131
Amada Support, Rebuilds,
Sales and Fanuc Control Upgrade
AUTHORIZED CNC SYSTEM INTEGRATOR FANUC

Index No.	Drawing No.	Parts Name	Type	Q'ty										Class	Note
				25	35S	50S	50	80S	80	100S	100	100L	125		
24		Pan head machine screw	M6 x 15	–	–	–	–	–	–	–	–	–	4		
25		Spring washer	M5	4	4	4	4	4	4	4	4	4	–		
25		Spring washer	M6	–	–	–	–	–	–	–	–	–	4		
26		Hour meter	TM-25 2000 hour	1	1	1	1	1	1	1	1	1	1	1	
27		Circuit protector	BA121205	2	2	2	2	2	2	2	2	2	–		
27		Circuit protector	BA121305	–	–	–	–	–	–	–	–	–	2		
28		Pan head machine screw	M4 x 8	4	4	4	4	4	4	4	4	4	4		
29	4095492	Bracket		1	1	1	1	1	1	1	1	1	1		
30		Pan head machine screw	M5 x 8	4	4	4	4	4	4	4	4	4	4		
31		Spring washer	M5	4	4	4	4	4	4	4	4	4	4		
32		Socket setting plate	P-18	1	1	1	1	1	1	1	1	1	1		
33		Pan head machine screw		4	4	4	4	4	4	4	4	4	4		
34		Relay	100V	1	1	1	1	1	1	1	1	1	1		
35		Socket		1	1	1	1	1	1	1	1	1	1		
36		Clip		1	1	1	1	1	1	1	1	1	1		
37	4091581a	Collar		4	4	4	4	4	4	4	4	4	–		
37	4092521a	Collar		–	–	–	–	–	–	–	–	–	4		
38		Grommet		4	4	4	4	4	4	4	4	4	–		
38		Gromme		–	–	–	–	–	–	–	–	–	4		
39		Cap s		4	4	4	4	4	4	4	4	4	4		
40		Wa		4	4	4	4	4	4	4	4	4	4		
41		Nut		2	2	2	2	2	2	2	2	2	2		
42		Channel base		1	1	1	1	1	1	1	1	1	–		
42		Channel base		–	–	–	–	–	–	–	–	–	1		
43		Terminal		7	7	7	7	7	7	7	7	7	–		
43		Terminal		–	–	–	–	–	–	–	–	–	7		
44		Terminal		17	15	15	15	15	15	15	15	15	17		
45		Separator		1	1	1	1	1	1	1	1	1	–		

LAPIS SERVICES INC
(219)-464-9131
Amada Support, Rebuilds,
Sales and Fanuc Control Upgrade
AUTHORIZED CNC SYSTEM INTEGRATOR
FANUC

Index No.	Drawing No.	Parts Name	Type	Q'ty										Class	Note
				25	35S	50S	50	80S	80	100S	100	100L	125		
45		Separator	BNE-51	–	–	–	–	–	–	–	–	–	1		
46		Clip	BNL-3	2	2	2	2	2	2	2	2	2	2		
47		Cover	BNC52 130ℓ	–	–	–	–	–	–	–	–	–	1		
48		Cover	BNC22 180ℓ	–	–	–	–	–	–	–	–	–	1		
49		Mark plate	BNM-10 310ℓ	–	–	–	–	–	–	–	–	–	1		
50		Pan head machine screw	M6 x 15	2	2	2	2	2	2	2	2	2	2		
51		Spring washer	M6	2	2	2	2	2	2	2	2	2	2		
52		Washer	M6	2	2	2	2	2	2	2	2	2	2		
53		Breaker lever	G-3A-K	1	1	1	1	1	1	1	1	1	–	3	
53		Breaker lever	G-21A-K	–	–	–	–	–	–	–	–	–	1	3	
54		Retainer	1E	1	1	1	1	1	1	1	1	1	–		
54		Retainer		–	–	–	–	–	–	–	–	–	1		
55	4095508	Control panel		1	1	1	1	1	1	1	1	1	1		
56		Select switch		1	1	1	1	1	1	1	1	1	1	3	
57		Pilot lamp		1	1	1	1	1	1	1	1	1	1	3	
58		Push button sw		1	1	1	1	1	1	1	1	1	1	3	
59		Push button		1	1	1	1	1	1	1	1	1	1	3	
60		Bulb		2	2	2	2	2	2	2	2	2	2	1	
61	4124479	Plate		1	1	1	1	1	1	1	1	1	–		
61	4124234	Pla		–	–	–	–	–	–	–	–	–	1		
62		Pan head machine		4	4	4	4	4	4	4	4	4	4		
63		Spring washer		4	4	4	4	4	4	4	4	4	4		
64		Nut		4	4	4	4	4	4	4	4	4	4		
65	389793	Sticker		1	1	1	1	1	1	1	1	1	1		
66	4095501	Washer		1	1	1	1	1	1	1	1	1	–		
66	4043645	Washer		–	–	–	–	–	–	–	–	–	1		
67		Pan head machin		2	2	2	2	2	2	2	2	2	2		
68	4071392b	Cover		1	1	1	1	1	1	1	1	1	–		

LAPIS SERVICES INC
(219)-464-9131
Amada Support, Rebuilds,
Sales and Fanuc Control Upgrade
AUTHORIZED CNC SYSTEM INTEGRATOR FANUC

Index No.	Drawing No.	Parts Name	Type	Q'ty										Class	Note
				25	35S	50S	50	80S	80	100S	100	100L	125		
68	4097287	Cover		–	–	–	–	–	–	–	–	–	1		
69		Pan head machine screw	M5 x 10	2	2	2	2	2	2	2	2	2	–		
70	4095509	Screw		2	2	2	2	2	2	2	2	2	2		
71		Washer	M8	2	2	2	2	2	2	2	2	2	2		
72		Nut	M8 type 3	2	2	2	2	2	2	2	2	2	2		
73		Connector	YS-22	1	1	1	1	1	1	1	1	1	–		
74		Pan head machine screw	M6 x 15	1	1	1	1	1	1	1	1	1	–		
74		Pan head machine screw	M8 x 20	–	–	–	–	–	–	–	–	–	1		
75		Spring washer	M6	1	1	1	1	1	1	1	1	1	–		
75		Spring washer	M8	–	–	–	–	–	–	–	–	–	1		
76		Washer	[illegible]	–	–	–	–	–	–	–	–	–	1		
77	AS-K1001	Sticker (ground)	[illegible]	3	[illegible]	[illegible]	3	3	3	3	[illegible]	[illegible]	[illegible]		
78		Pan head machine screw	[illegible]	2	2	2	2	2	2	2	2	2	1		
79		Spring washer	[illegible]	2	2	2	2	2	2	2	2	2	1		
80		Nut	[illegible]	1	1	1	1	1	1	1	1	1	–		
81		Grommet	[illegible]	1	1	1	1	1	1	1	1	1	–		
81		Grommet	[illegible]	–	–	–	–	–	–	–	–	–	1		
82		Grommet	[illegible]	2	2	2	2	2	2	2	2	2	1		
83		Gromm[illegible]	[illegible]	1	1	1	1	1	1	1	1	1	1		
84		Grom[illegible]	[illegible]	1	1	1	1	1	1	1	1	1	1		
85	4097286	Pl[illegible]	[illegible]	–	–	–	–	–	–	–	–	–	1		

LAPIS SERVICES INC
(219)-464-9131
Amada Support, Rebuilds,
Sales and Fanuc Control Upgrade
AUTHORIZED CNC SYSTEM INTEGRATOR
FANUC

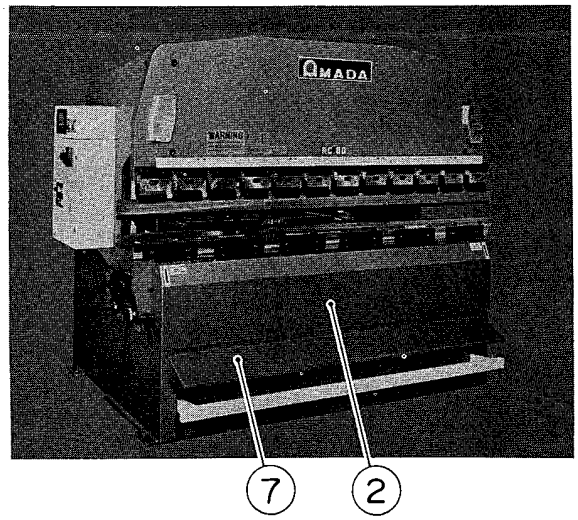

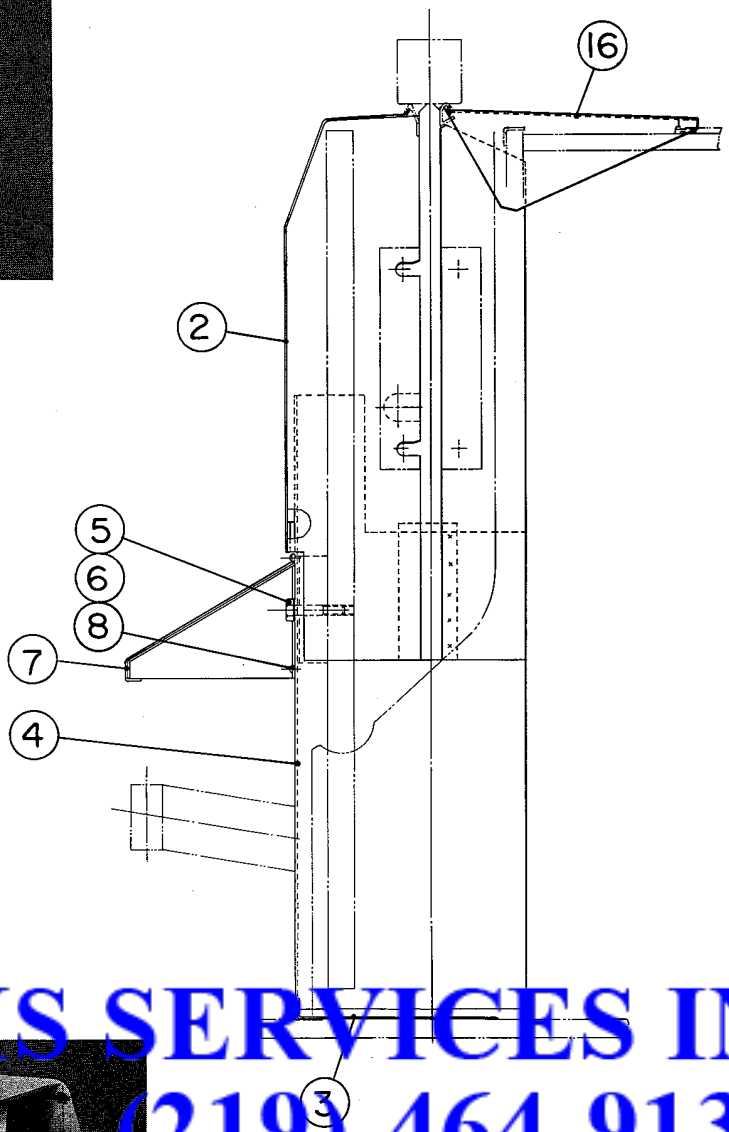

LAPIS SERVICES INC
(219)-464-9131
AUTHORIZED CNC SYSTEM INTEGRATOR
FANUC
Amada Support, Rebuilds,
Sales and Fanuc Control Upgrade

Index No.	Drawing No.	Parts Name	Type	Q'ty										Class	Note
				25	35S	50S	50	80S	80	100S	100	100L	125		
1	4125384	Front cover ass'y		1	–	–	–	–	–	–	–	–	–		
1	4125385	Front cover ass'y		–	1	–	–	–	–	–	–	–	–		
1	4125386	Front cover ass'y		–	–	1	–	–	–	–	–	–	–		
1	4120655	Front cover ass'y		–	–	–	1	–	–	–	–	–	–		
1	4120657	Front cover ass'y		–	–	–	–	1	–	–	–	–	–		
1	4120045	Front cover ass'y		–	–	–	–	–	1	–	–	–	–		
1	4120659	Front cover ass'y		–	–	–	–	–	–	1	–	–	–		
1	4120661	Front cover ass'y		–	–	–	–	–	–	–	1	–	–		
1	4120667	Front cover ass'y		–	–	–	–	–	–	–	–	1	–		
1	4120670	Front cover ass'y		–	–	–	–	–	–	–	–	–	1		
2	4120403	Front cover (upper)		[illegible]	[illegible]	[illegible]	[illegible]	[illegible]	[illegible]	[illegible]	[illegible]	[illegible]	[illegible]		
2	4120410	Front cover (upper)		[illegible]	[illegible]	[illegible]	[illegible]	[illegible]	[illegible]	[illegible]	[illegible]	[illegible]	[illegible]		
2	4121636	Front cover (upper)		–	–	1	–	–	–	–	–	–	–		
2	4120412	Front cover (upper)		–	–	–	1	–	–	–	–	–	–		
2	4120413	Front cover (upper)		–	–	–	–	1	–	–	–	–	–		
2	4120414	Front cover (upp		–	–	–	–	–	1	–	–	–	–		
2	4120415	Front cover (		–	–	–	–	–	–	1	–	–	–		
2	4120416	Front cove		–	–	–	–	–	–	–	1	–	–		
2	4120417	Front c		–	–	–	–	–	–	–	–	1	–		
2	4120877	Fron		–	–	–	–	–	–	–	–	–	1		
3	4120652a	A		1	1	–	–	–	–	–	–	–	–		
3	4121637	Auxiliary cover		[illegible]	1	[illegible]	[illegible]	[illegible]	[illegible]	[illegible]	[illegible]	[illegible]	–		
3	4120658a	Auxiliary cover		–	–	–	1	1	–	–	–	–	–		
3	4121655a	Auxiliary cove		[illegible]	[illegible]	[illegible]	[illegible]	[illegible]	1	[illegible]	[illegible]	[illegible]	[illegible]		
3	4120660a	Auxiliary cove		–	–	–	–	–	–	1	–	–	–		
3	4121663a	Auxiliary cover		–	–	–	–	–	–	–	1	–	–		
4	4096409	Front cover (lowe		1	–	–	–	–	–	–	–	–	–		
4	4096411	Front cover (lower)		–	1	–	–	–	–	–	–	–	–		

LAPIS SERVICES INC
(219)-464-9131
Amada Support, Rebuilds,
Sales and Fanuc Control Upgrade
AUTHORIZED CNC SYSTEM INTEGRATOR
FANUC

Index No.	Drawing No.	Parts Name	Type	Q'ty										Class	Note
				25	35S	50S	50	80S	80	100S	100	100L	125		
4	4098316	Front cover (lower)		–	–	1	–	–	–	–	–	–	–		
4	4096320	Front cover (lower)		–	–	–	1	–	–	–	–	–	–		
4	4096322	Front cover (lower)		–	–	–	–	1	–	–	–	–	–		
4	4096321	Front cover (lower)		–	–	–	–	–	1	–	–	–	–		
4	4096413	Front cover (lower)		–	–	–	–	–	–	1	–	–	–		
4	4096415	Front cover (lower)		–	–	–	–	–	–	–	1	–	–		
4	4096419	Front cover (lower)		–	–	–	–	–	–	–	–	1	–		
4	4097152	Front cover (lower)		–	–	–	–	–	–	–	–	–	1		
5		Bolt	M10 x 45	2	2	2	–	–	2	–	2	2	2		
5		Bolt	M10 x 40	–	–	–	2	2	–	2	–	–	–		
6		Washer	10	2	[illegible]	[illegible]	[illegible]	[illegible]	2	2	2	[illegible]	2		
7	4091218a	Pedal cover		1	[illegible]	[illegible]	[illegible]	[illegible]	[illegible]	1	[illegible]	[illegible]	[illegible]		
7	4091220a	Pedal cover		–	–	–	1	1	–	–	–	–	–		
7	4091222a	Pedal cover		–	[illegible]	[illegible]	[illegible]	[illegible]	1	1	[illegible]	–	–		
7	4091224a	Pedal cover		–	–	–	–	–	–	–	1	–	1		
7	4091226a	Pedal cover		–	–	–	–	–	–	–	–	1	–		
8		Pan head mac		5	5	5	5	5	6	6	6	8	6		
9	4096404	Rear co		1	1	–	–	–	–	–	–	–	–		
9	4098330a	Rear		–	–	1	–	–	–	–	–	–	–		
9	4096328	R		–	–	–	1	1	–	–	–	–	–		
9	4096329	Rear cover ass'y		[illegible]	[illegible]	[illegible]	[illegible]	[illegible]	1	1	[illegible]	–	–		
9	4096398	Rear cover ass'y		–	–	–	–	–	–	–	1	–	–		
9	4096399	Rear cover ass'		[illegible]	[illegible]	[illegible]	[illegible]	[illegible]	[illegible]	[illegible]	[illegible]	1	[illegible]		
9	4097155	Rear cover ass		–	–	–	–	–	–	–	–	–	1		
10	4095407	Rear cover (A)		1	1	–	–	–	–	–	–	–	–		
10	4098331a	Rear cover (A)		–	–	1	–	–	–	–	–	–	–		
10	4095494	Rear cover (A)		–	–	–	1	1	–	–	–	–	–		

LAPIS SERVICES INC
(219)-464-9131
Amada Support, Rebuilds,
Sales and Fanuc Control Upgrade
AUTHORIZED CNC SYSTEM INTEGRATOR
FANUC

Index No.	Drawing No.	Parts Name	Type	Q'ty										Class	Note
				25	35S	50S	50	80S	80	100S	100	100L	125		
10	4095522	Rear cover (A)		–	–	–	–	–	1	1	–	–	–		
10	4095513	Rear cover (A)		–	–	–	–	–	–	–	1	–	1		
10	4096400	Rear cover (A)		–	–	–	–	–	–	–	–	1	–		
11	4095408	Rear cover (B)		1	1	–	–	–	–	–	–	–	–		
11	4098335a	Rear cover (B)		–	–	1	–	–	–	–	–	–	–		
11	4095496	Rear cover (B)		–	–	–	1	1	–	–	–	–	–		
11	4095524	Rear cover (B)		–	–	–	–	–	1	1	–	–	–		
11	4095515	Rear cover (B)		–	–	–	–	–	–	–	1	–	1		
11	4096402	Rear cover (B)		–	–	–	–	–	–	–	–	1	–		
12	4040893	Knob		4	4	4	4	4	4	4	4	4	4		
13		Bolt	M10 L20	4	4	4	4	4	4	4	4	4	4		
14		Washer		4	4	4	4	4	4	4	4	4	4		
15	383322a	Rubber packing		1	1	1	1	1	1	1	1	1	1		
16	51.86105.0	Upper cover ass'y		1	–	–	–	–	–	–	–	–	–		
16	382180	Upper cover ass		–	1	–	–	–	–	–	–	–	–		
16	4098327	Upper cover		–	–	1	–	–	–	–	–	–	–		
16	51.86108.0	Upper co		–	–	–	1	–	–	–	–	–	–		
16	380370	Upper		–	–	–	–	1	–	–	–	–	–		
16	51.86109.0	Up		–	–	–	–	–	1	1	–	–	–		
16	51.86121.0			–	–	–	–	–	–	–	1	–	1		
16	381205	Upper cover ass'		–	–	–	–	–	–	–	–	1	–		

LAPIS SERVICES INC
(219)-464-9131
Amada Support, Rebuilds,
Sales and Fanuc Control Upgrade
AUTHORIZED CNC SYSTEM INTEGRATOR FANUC

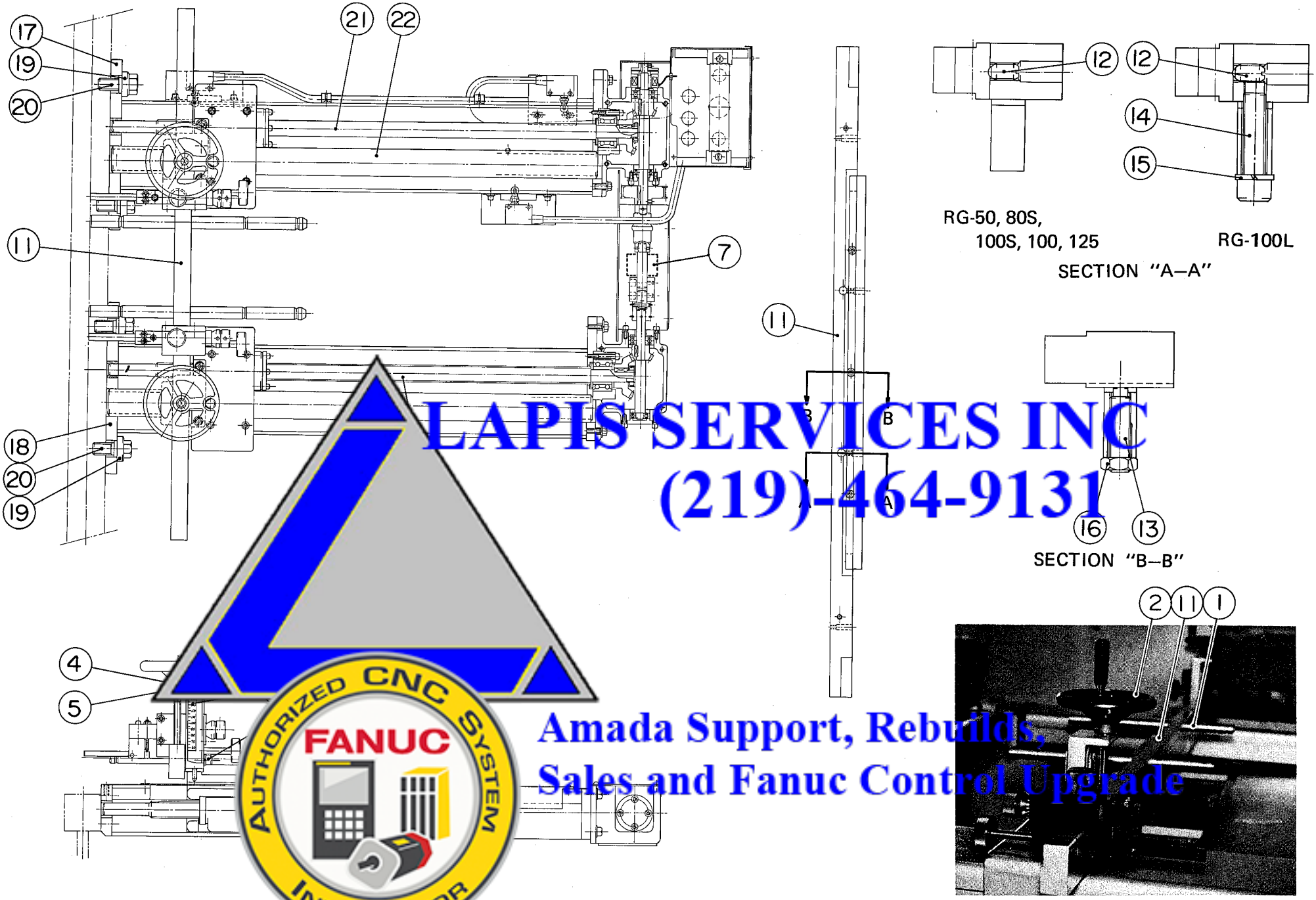

LAPIS SERVICES INC
(219)-464-9131
Amada Support, Rebuilds,
Sales and Fanuc Control Upgrade
AUTHORIZED CNC SYSTEM INTEGRATOR
FANUC

Index No.	Drawing No.	Parts Name	Type	Q'ty										Class	Note
				25	35S	50S	50	80S	80	100S	100	100L	125		
1	571330	Rod		2	2	2	2	2	2	2	2	4	2		
2	4124910	Handwheel		2	2	2	2	2	2	2	2	2	2		
3	4124911a	Lever		2	2	2	2	2	2	2	2	2	2		
4		Spring pin	5^{ϕ} x 30	2	2	2	2	2	2	2	2	2	2		
5		Washer	M10	2	2	2	2	2	2	2	2	2	2		
6	4124912a	Scale		2	2	2	2	2	2	2	2	2	2		
7	810584a	Caution plate		1	1	1	1	1	1	1	1	1	1		
8		Cap screw	M10 x 50	2	2	2	2	2	2	2	2	2	2		
9		Spring washer	M10	2	2	2	2	2	2	2	2	2	2		
10		Washer	M10	2	2	2	2	2	2	2	2	2	2		
11	4124965	Straightedge		1	–	–	–	–	–	–	–	–	–		
11	4124966a	Straightedge		–	–	–	1	–	–	–	–	–	–		
11	4124967a	Straightedge		–	–	–	–	–	1	1	–	–	–		
11	4124968a	Straightedge		–	–	–	–	–	–	–	–	–	1		
11	4124969a	Straightedge		–	–	–	–	–	–	–	–	1	–		
12		Ball plunger		2	2	2	2	2	2	2	2	4	2	3	
13		Set screw		–	–	–	3	3	3	3	3	3	3		
14		Cap screw		–	–	–	–	–	–	–	–	4	–		
15		Spring		–	–	–	–	–	–	–	–	4	–		
16		Nut		–	–	–	3	3	3	3	3	3	3		
17	4124914d	S		1	1	1	1	1	1	1	1	1	1		
18	4124951	Support frame (I		1	1	1	1	1	1	1	1	1	1		
19	51.45037.0	Washer		4	4	4	4	4	4	4	4	4	4		
20		Bolt		4	4	4	4	4	4	4	4	4	4		
21	7937016b	Ball screw		2	2	2	2	2	2	2	2	2	2	3	
22	4124921	Guide bar		2	2	2	2	2	2	2	2	2	2	3	

LAPIS SERVICES INC
(219)-464-9131
Amada Support, Rebuilds,
Sales and Fanuc Control Upgrade
AUTHORIZED CNC SYSTEM INTEGRATOR
FANUC

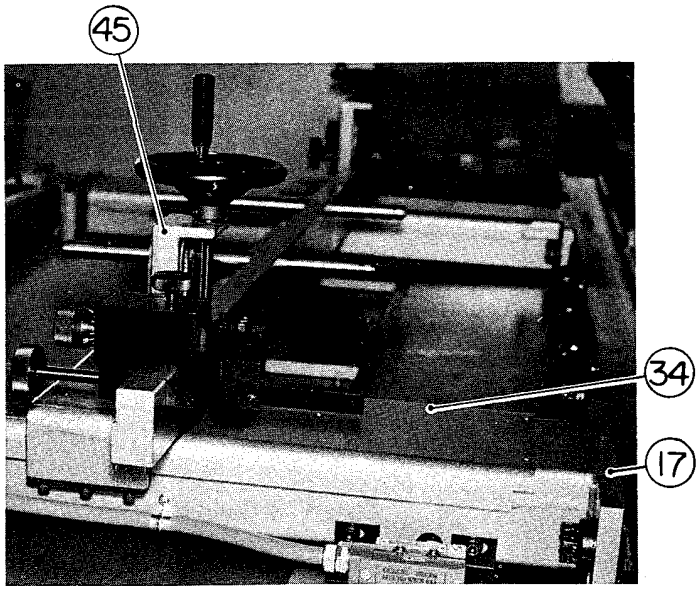

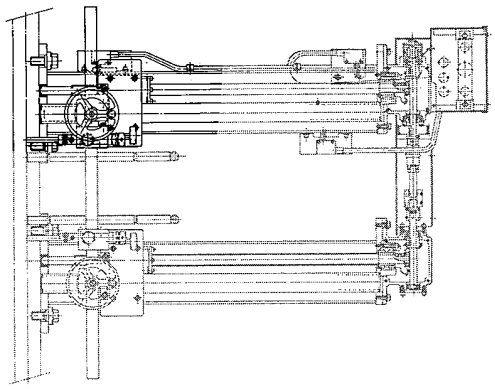

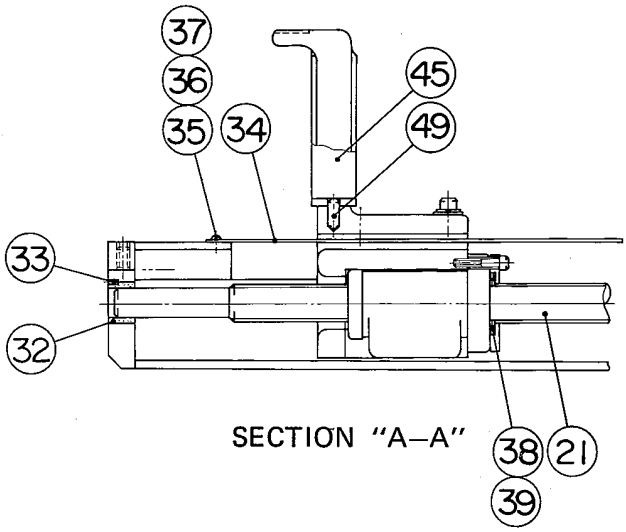

SECTION "A–A"

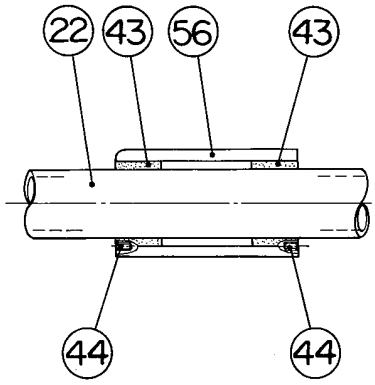

SECTION "B–B"

LAPIS SERVICES INC
(219)-464-9131
Amada Support, Rebuilds,
Sales and Fanuc Control Upgrade
AUTHORIZED CNC SYSTEM
FANUC
INTEGRATOR

Index No.	Drawing No.	Parts Name	Type	Q'ty										Class	Note
				25	35S	50S	50	80S	80	100S	100	100L	125		
23	4124918	L.S. setting plate		2	2	2	2	2	2	2	2	2	2		
24		Cap screw	M6 x 12	4	4	4	4	4	4	4	4	4	4		
25		Spring washer	M6	4	4	4	4	4	4	4	4	4	4		
26		Washer	M6	4	4	4	4	4	4	4	4	4	4		
27		Limit switch	ZE-Q22	3	3	3	3	3	3	3	3	3	3	3	
28		Pan head machine screw	M4 x 30	6	6	6	6	6	6	6	6	6	6		
29		Spring washer	M4	6	6	6	6	6	6	6	6	6	6		
30		Washer	M4	6	6	6	6	6	6	6	6	6	6		
31		Nut	M4 type 2	6	6	6	6	6	6	6	6	6	6		
32		Oilless bushing	SOB-20 x 20	2	2	2	2	2	2	2	2	2	2		
33		Set screw	3 x	[illegible]	[illegible]	[illegible]	[illegible]	[illegible]	2	2	2	2	2		
34	4124920a	Cover		2	[illegible]	2	2	[illegible]	2	2	[illegible]	2	[illegible]		
35		Pan head machine screw		8	8	8	8	8	8	8	8	8	8		
36		Spring washer		8	8	8	8	8	[illegible]	8	[illegible]	8	8		
37		Washer		8	8	8	8	8	8	8	8	8	8		
38		Seal cap	502	2	2	2	2	2	2	2	2	2	2		
39		Brush wiper		4	4	4	4	4	4	4	4	4	4	1	
40	4124949	Brush sup		2	2	2	2	2	2	2	2	2	2		
41		Cap scr		6	6	6	6	6	6	6	6	6	6		
42		Set		2	2	2	2	2	2	2	2	2	2		
43		C		4	4	4	4	4	4	4	4	4	4		
44		Set screw		4	4	4	4	4	4	4	4	4	4		
45	4124922a	Arm		2	2	2	2	2	2	2	2	2	2		
46		Cap screw		4	4	4	4	4	4	4	4	4	4		
47		Spring washer		4	4	4	4	4	4	4	4	4	4		
48		Washer		4	4	4	4	4	4	4	4	4	4		
49		Straight pin		2	2	2	2	2	2	2	2	2	2		
50	4124923	Saddle		2	2	2	2	2	2	2	2	2	2		

LAPIS SERVICES INC
(219)-464-9131
Amada Support, Rebuilds,
Sales and Fanuc Control Upgrade
AUTHORIZED CNC SYSTEM INTEGRATOR FANUC

Index No.	Drawing No.	Parts Name	Type	Q'ty										Class	Note
				25	35S	50S	50	80S	80	100S	100	100L	125		
51	4124924a	Bracket (A)		2	2	2	2	2	2	2	2	2	2		
52	4124925a	Bracket (B)		2	2	2	2	2	2	2	2	2	2		
53		Cap screw	M6 x 15	20	20	20	20	20	20	20	20	20	20		
54		Spring washer	M6	12	12	12	12	12	12	12	12	12	12		
55		Spring pin	5^{ϕ} x 20	4	4	4	4	4	4	4	4	4	4		
56	4124926b	Carriage		2	2	2	2	2	2	2	2	2	2		
57		Flexible tube	MPF-9 ℓ = 780	1	1	1	1	1	1	1	1	1	1		
58		Cable	KLV 1.25 mm^2 9 m black	2	2	2	2	2	2	2	2	2	2		
59		Cable	KLV 1.25 mm 2.5 m green	1	1	1	1	1	1	1	1	1	1		
60		Cable	KLV 1.25 mm 5 m blue	1	1	1	1	1	1	1	1	1	1		
61		Connector	SG-[illegible]	[illegible]	[illegible]	[illegible]	[illegible]	[illegible]	[illegible]	[illegible]	[illegible]	[illegible]	[illegible]		
62		Collar		6	6	6	6	6	6	6	6	6	6		
63		Saddle		2	2	2	2	2	2	2	2	2	2		
64		Pan head machine scre[illegible]		2	2	2	2	2	2	2	2	2	2		

LAPIS SERVICES INC
(219)-464-9131
AUTHORIZED CNC SYSTEM FANUC INTEGRATOR
Amada Support, Rebuilds,
Sales and Fanuc Control Upgrade

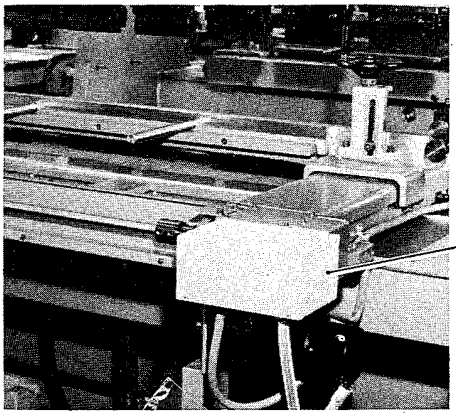

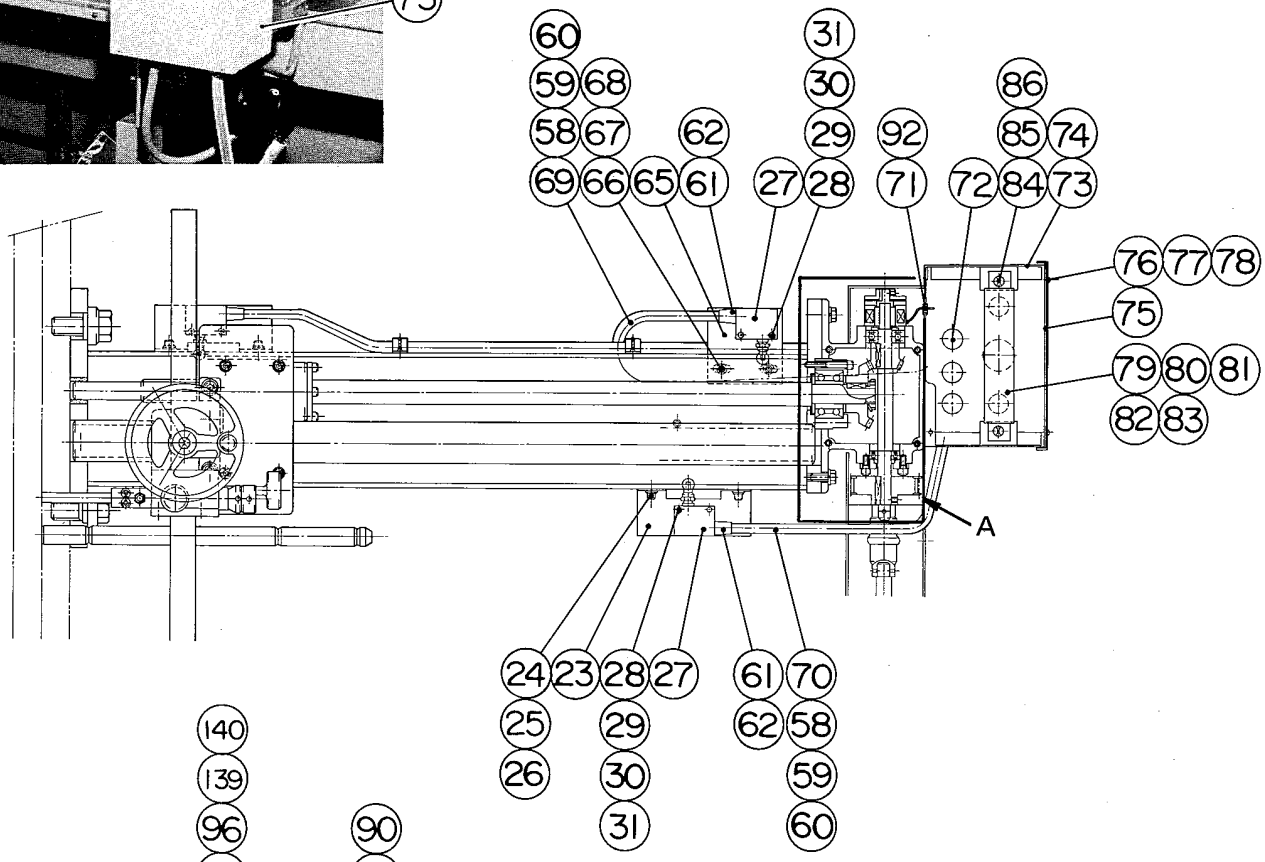

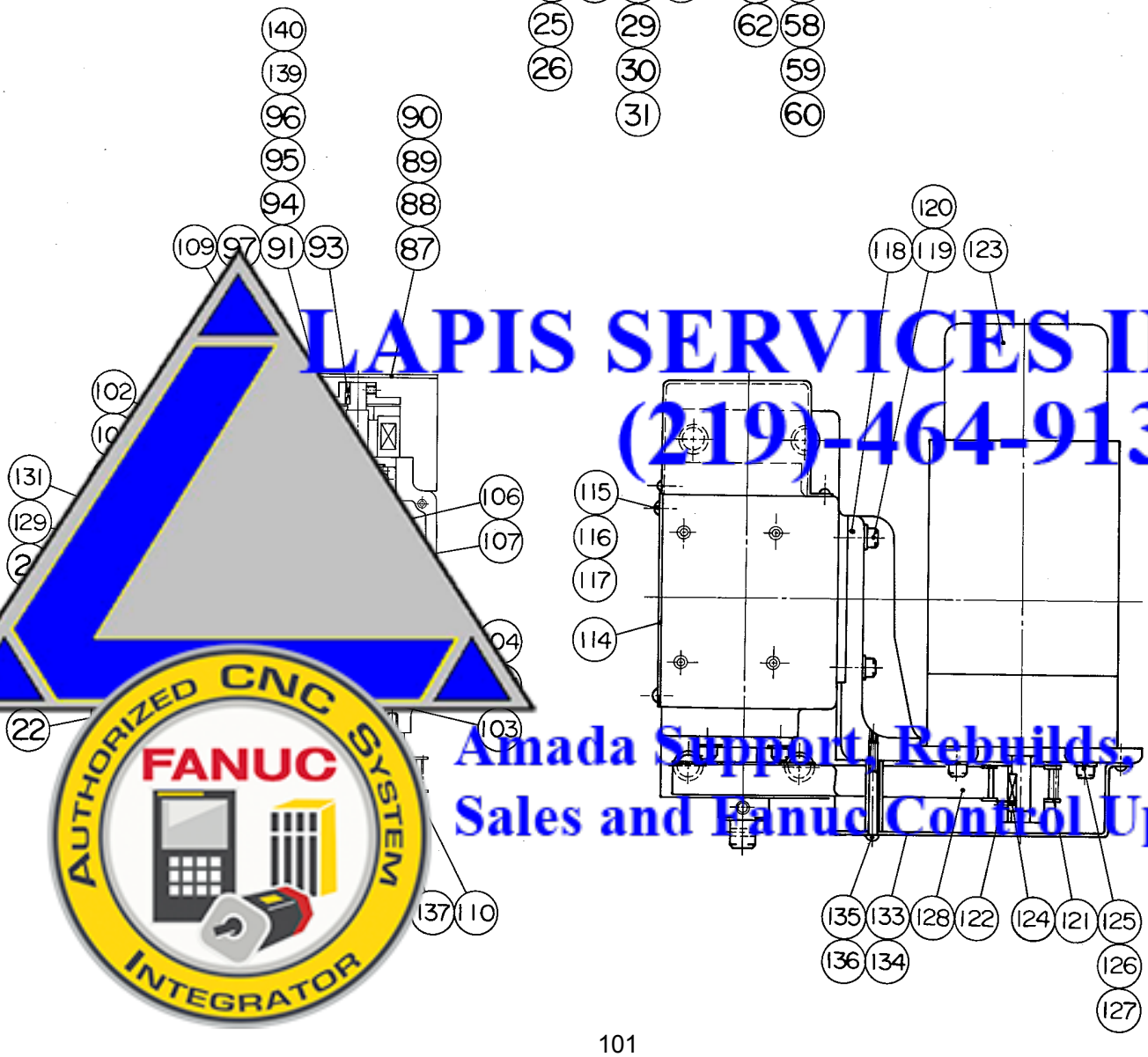

LAPIS SERVICES INC
(219)-464-9131
Amada Support, Rebuilds,
Sales and Fanuc Control Upgrade
AUTHORIZED CNC SYSTEM
FANUC
INTEGRATOR

Index No.	Drawing No.	Parts Name	Type	Q'ty										Class	Note
				25	35S	50S	50	80S	80	100S	100	100L	125		
65	4124919	L.S. bracket		1	1	1	1	1	1	1	1	1	1		
66		Cap screw	M6 x 10	2	2	2	2	2	2	2	2	2	2		
67		Spring washer	M6	2	2	2	2	2	2	2	2	2	2		
68		Washer	M6	2	2	2	2	2	2	2	2	2	2		
69		Flexible tube	MPF-9 ℓ = 300	1	1	1	1	1	1	1	1	1	1		
70		Flexible tube	MPF-9 ℓ = 440	1	1	1	1	1	1	1	1	1	1		
71		Gromett	NG-79A	1	1	1	1	1	1	1	1	1	1		
72		Connector	CLG-9	5	5	5	5	5	5	5	5	5	5		
73	4124941b	Terminal box		1	1	1	1	1	1	1	1	1	1		
74		Cap screw	M6 x 15	4	4	4	4	4	4	4	4	4	4		
75	4124947a	Cover		2	2	2	2	2	2	2	2	2	2		
76		Pan head machine screw		8	8	8	8	8	8	8	8	8	8		
77		Spring washer		8	8	8	8	8	8	8	8	8	8		
78		Washer		8	8	8	8	8	8	8	8	8	8		
79		Channel base		1	1	1	1	1	1	1	1	1	1		
80		Terminal block		17	17	17	17	17	17	17	17	17	17		
81		Separator		1	1	1	1	1	1	1	1	1	1		
82		Retainer		2	2	2	2	2	2	2	2	2	2		
83		Dust co		1	1	1	1	1	1	1	1	1	1		
84		Pan		2	2	2	2	2	2	2	2	2	2		
85		Sp		2	2	2	2	2	2	2	2	2	2		
86		Washer		2	2	2	2	2	2	2	2	2	2		
87	4126643	Brake cover		1	1	1	1	1	1	1	1	1	1		
88		Pan head mach		2	2	2	2	2	2	2	2	2	2		
89		Spring washer		2	2	2	2	2	2	2	2	2	2		
90		Washer		2	2	2	2	2	2	2	2	2	2		
91		Electro-magnetic		1	1	1	1	1	1	1	1	1	1	3	
92		Bushing		1	1	1	1	1	1	1	1	1	1		

LAPIS SERVICES INC
(219)-464-9131
Amada Support, Rebuilds,
Sales and Fanuc Control Upgrade
AUTHORIZED CNC SYSTEM INTEGRATOR
FANUC

Index No.	Drawing No.	Parts Name	Type	Q'ty										Class	Note
				25	35S	50S	50	80S	80	100S	100	100L	125		
93		Key	2.5 x 2.5 x 12	1	1	1	1	1	1	1	1	1	1		
94		Pan head machine screw	M4 x 8	4	4	4	4	4	4	4	4	4	4		
95		Spring washer	M4	4	4	4	4	4	4	4	4	4	4		
96		Washer	M4	4	4	4	4	4	4	4	4	4	4		
97	4124928	Collar		1	1	1	1	1	1	1	1	1	1		
98	4124930a	Gear case (R)		1	1	1	1	1	1	1	1	1	1		
99		Bolt	M8 x 20	4	4	4	4	4	4	4	4	4	4		
100		Spring washer	M8	4	4	4	4	4	4	4	4	4	4		
101	4124931a	Bevel gear		2	2	2	2	2	2	2	2	2	2	3	
102		Key	5 x 5 x 25	2	2	2	2	2	2	2	2	2	2		
103	4124932a	Shaft		1	1	1	1	1	1	1	1	1	1		
104		Crown nut		2	2	2	2	2	2	2	2	2	2		
105		Crown washer		2	2	2	2	2	2	2	2	2	2		
106	4124933b	Bevel gear		2	2	2	2	2	2	2	2	2	2	3	
107		Key		2	2	2	2	2	2	2	2	2	2		
108	4125547	Spacer		1	1	1	1	1	1	1	1	1	1		
109		Ball bearing		2	2	2	2	2	2	2	2	2	2	3	
110		Ball bearin		1	1	1	1	1	1	1	1	1	1	3	
111	4124935	Pulley		1	1	1	1	1	1	1	1	1	1		
112		Key		1	1	1	1	1	1	1	1	1	1		
113		S		1	1	1	1	1	1	1	1	1	1		
114	4124936	Cover		1	1	1	1	1	1	1	1	1	1		
115		Pan head mach		4	4	4	4	4	4	4	4	4	4		
116		Spring washer		4	4	4	4	4	4	4	4	4	4		
117		Washer		4	4	4	4	4	4	4	4	4	4		
118	4124937	Motor bracket		1	1	1	1	1	1	1	1	1	1		
119		Cap screw		4	4	4	4	4	4	4	4	4	4		
120		Spring washer		4	4	4	4	4	4	4	4	4	4		

LAPIS SERVICES INC
(219)-464-9131
Amada Support, Rebuilds,
Sales and Fanuc Control Upgrade
AUTHORIZED CNC SYSTEM INTEGRATOR
FANUC

Index No.	Drawing No.	Parts Name	Type	Q'ty										Class	Note
				25	35S	50S	50	80S	80	100S	100	100L	125		
121	4124938	Pulley		1	1	1	1	1	1	1	1	1	1		
122		Set screw	M4 x 4	2	2	2	2	2	2	2	2	2	2		
123		Motor	DC-150W (with encoder)	1	1	1	1	1	1	1	1	1	1	3	
124		Key	4 x 4 x 20	1	1	1	1	1	1	1	1	1	1		
125		Cap screw	M6 x 20	4	4	4	4	4	4	4	4	4	4		
126		Spring washer	M6	4	4	4	4	4	4	4	4	4	4		
127		Washer	M6	4	4	4	4	4	4	4	4	4	4		
128		Timing belt	187L050	1	1	1	1	1	1	1	1	1	1	1	
129	4124939	Collar		2	2	2	2	2	2	2	2	2	2		
130	4124940a	Bearing case		2	2	2	2	2	2	2	2	2	2		
131		Ball bearing	040DB-GNP	2	2	2	2	2	2	2	2	2	2	3	
132		Cap screw	5	8	8	8	8	8	8	8	8	8	8		
133	4124948	Cover		1	1	1	1	1	1	1	1	1	1		
134		Pan head machine scre		2	2	2	2	2	2	2	2	2	2		
135		Pan head machine s		1	1	1	1	1	1	1	1	1	1		
136		Spring washer		3	3	3	3	3	3	3	3	3	3		
137	4124934	Flange		1	1	1	1	1	1	1	1	1	1		
138		Cap screw		4	4	4	4	4	4	4	4	4	4		
139		Diode		1	1	1	1	1	1	1	1	1	1	3	
140		Flex		1	1	1	1	1	1	1	1	1	1		

LAPIS SERVICES INC
(219)-464-9131
Amada Support, Rebuilds,
Sales and Fanuc Control Upgrade
AUTHORIZED CNC SYSTEM INTEGRATOR FANUC

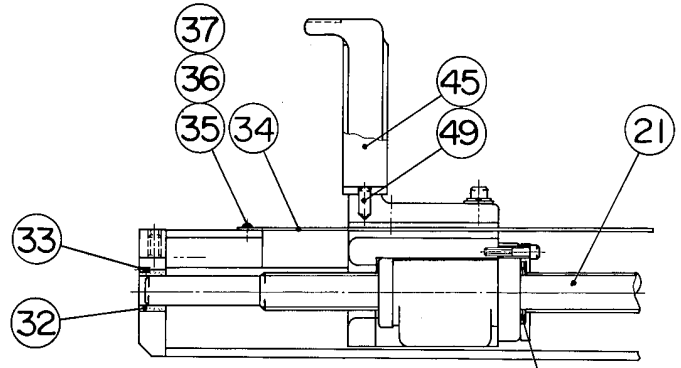

SECTION "A–A"

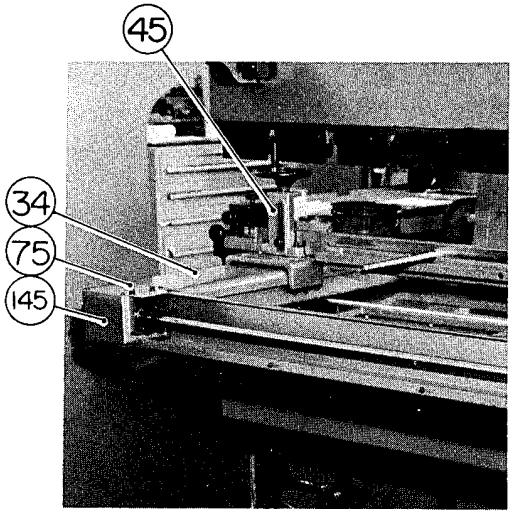

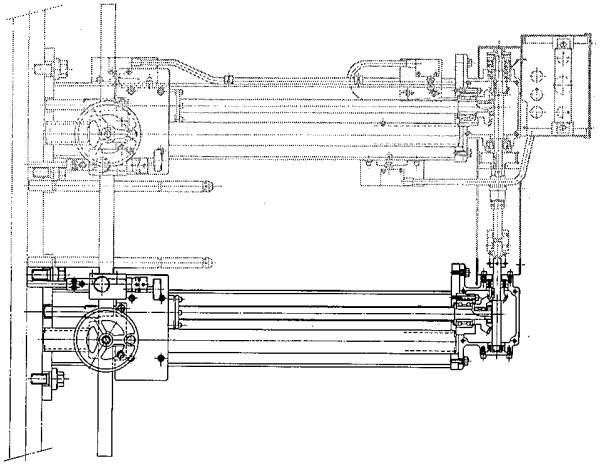

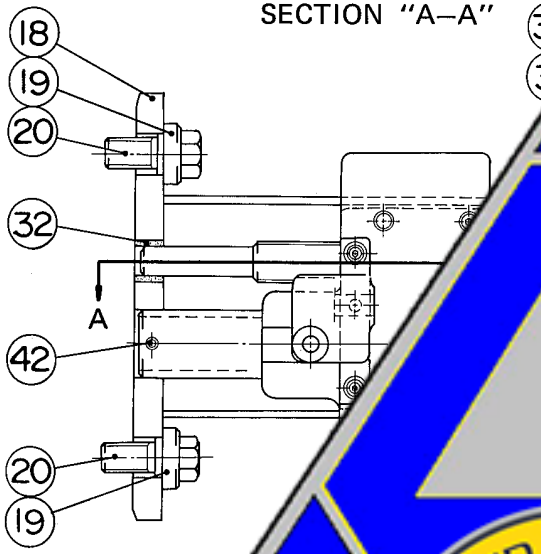

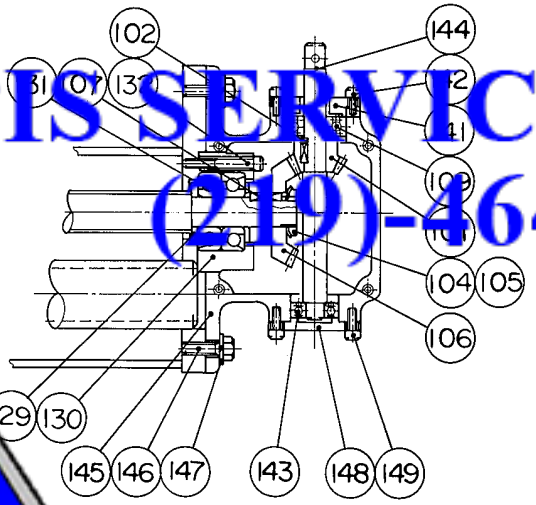

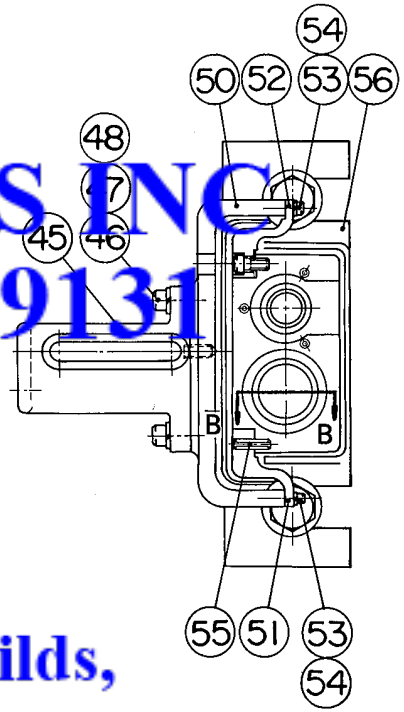

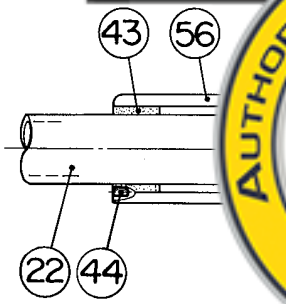

SECTION "B–B"

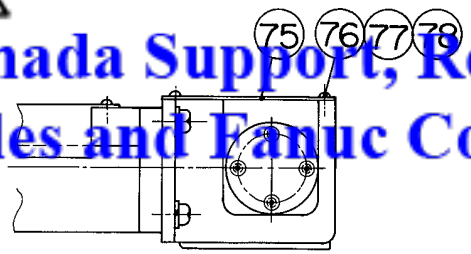

LAPIS SERVICES INC
(219)-464-9131
Amada Support, Rebuilds,
Sales and Fanuc Control Upgrade
AUTHORIZED CNC SYSTEM INTEGRATOR
FANUC

Index No.	Drawing No.	Parts Name	Type	Q'ty										Class	Note
				25	35S	50S	50	80S	80	100S	100	100L	125		
141	4124954	Flange		1	1	1	1	1	1	1	1	1	1		
142		Cap screw	M6 x 15	4	4	4	4	4	4	4	4	4	4		
143		Ball bearing	6201ZZ	1	1	1	1	1	1	1	1	1	1	3	
144	4124955a	Shaft		1	1	1	1	1	1	1	1	1	1		
145	4124953a	Gear case (L)		1	1	1	1	1	1	1	1	1	1		
146		Bolt	M8 x 20	4	4	4	4	4	4	4	4	4	4		
147		Spring washer	M8	4	4	4	4	4	4	4	4	4	4		
148	4124956	Cap		1	1	1	1	1	1	1	1	1	1		
149		Cap screw	M6 x 15	4	4	4	4	4	4	4	4	4	4		

LAPIS SERVICES INC
(219)-464-9131
Amada Support, Rebuilds,
Sales and Fanuc Control Upgrade
AUTHORIZED CNC SYSTEM INTEGRATOR
FANUC

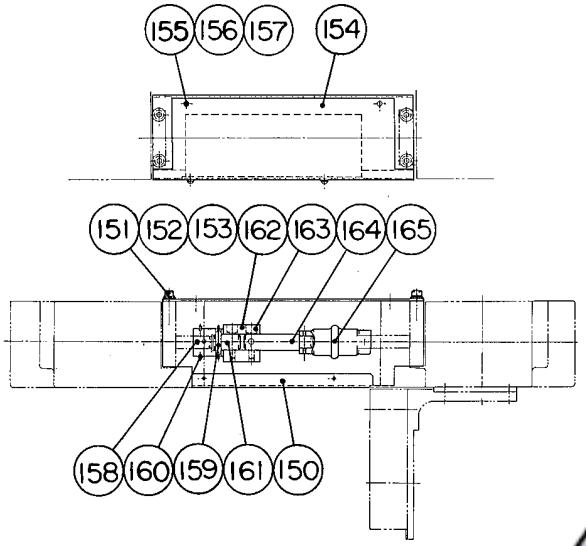

RG-25S, 35S, 50S

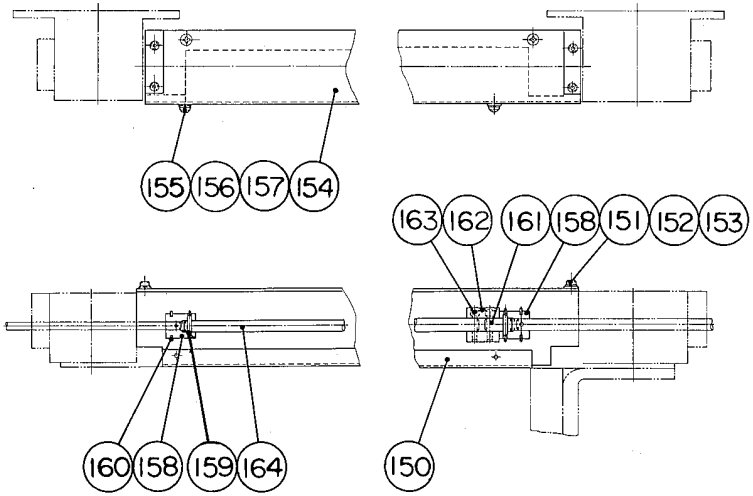

RG-50, 80S, 8[illegible], 100S

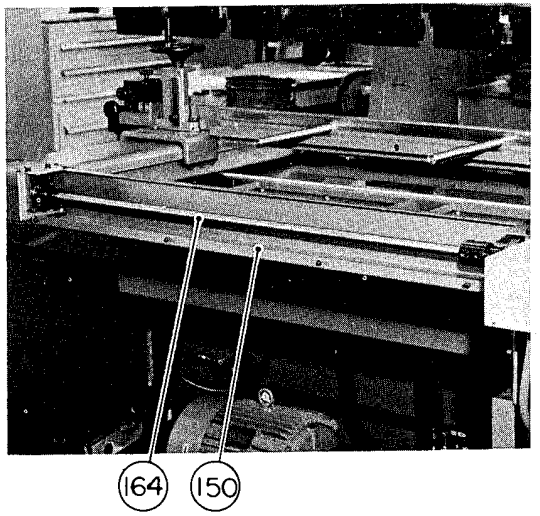

LAPIS SERVICES INC
(219)-464-9131

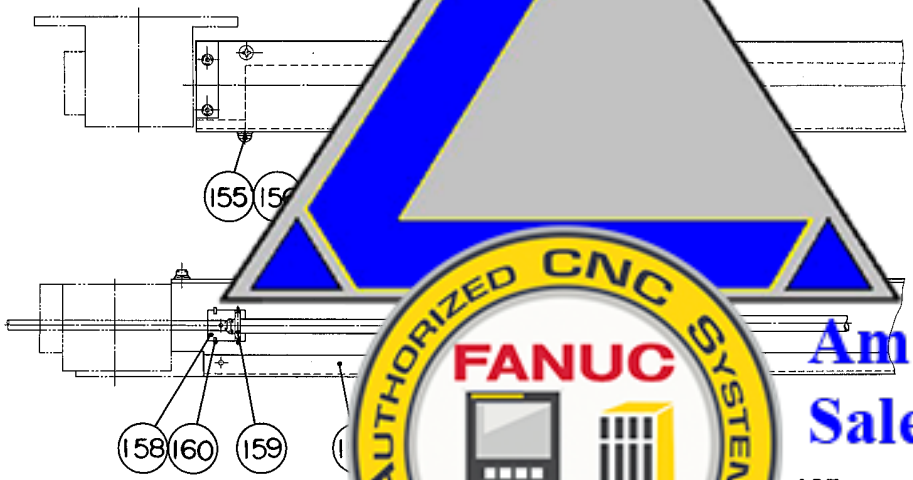

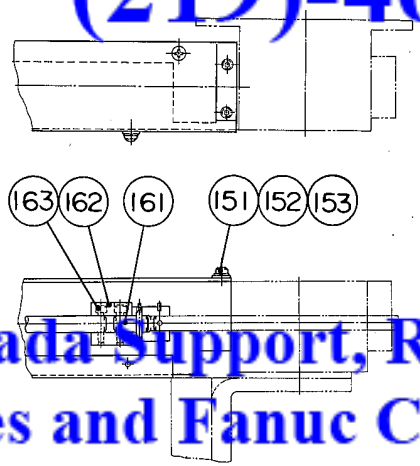

, 125

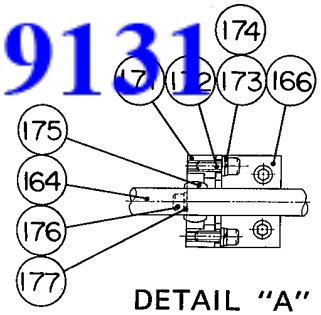

DETAIL "A"

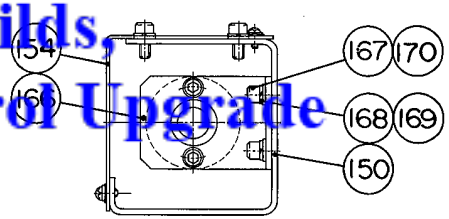

SECTION "B—B"

Amada Support, Rebuilds,
Sales and Fanuc Control Upgrade

Index No.	Drawing No.	Parts Name	Type	Q'ty										Class	Note
				25	35S	50S	50	80S	80	100S	100	100L	125		
150	4124975a	Cover (A)		1	1	1	–	–	–	–	–	–	–		
150	4124976a	Cover (A)		–	–	–	1	1	–	–	–	–	–		
150	4124977b	Cover (A)		–	–	–	–	–	1	1	–	–	–		
150	4124978a	Cover (A)		–	–	–	–	–	–	–	1	–	1		
150	4124979a	Cover (A)		–	–	–	–	–	–	–	–	1	–		
151		Cap screw	M6 x 12	4	4	4	4	4	4	4	4	4	4		
152		Spring washer	M6	4	4	4	4	4	4	4	4	4	4		
153		Washer	M6	4	4	4	4	4	4	4	4	4	4		
154	4124980	Cover (B)		1	1	1	–	–	–	–	–	–	–		
154	4124981	Cover (B)		–	–	–	1	1	–	–	–	–	–		
154	4124982	Cover (B)		–	–	–	–	–	1	1	–	–	–		
154	4124983	Cover (B)		–	–	–	–	–	–	–	1	–	–		
154	4124984	Cover (B)		–	–	–	–	–	–	–	–	1	–		
155		Pan head machine scre		4	4	4	6	6	8	8	10	12	10		
156		Spring washer		4	4	4	6	6	8	8	10	12	10		
157		Washer		4	4	4	6	6	8	8	10	12	10		
158	4125388	Connector		1	1	1	2	2	2	2	2	2	2		
159		Straight pi		2	2	2	4	4	4	4	4	4	4		
160		Snap ri		2	2	2	4	4	4	4	4	4	4		
161	4125389	Pin		1	1	1	1	1	1	1	1	1	1		
162	4124987	C		1	1	1	1	1	1	1	1	1	1		
163		Cap screw		4	4	4	4	4	4	4	4	4	4		
164	4124988a	Shaft		1	1	1	–	–	–	–	–	–	–		
164	4124989a	Shaft		–	–	–	1	1	–	–	–	–	–		
164	4124990a	Shaft		–	–	–	–	–	1	1	–	–	–		
164	4124991a	Shaft		–	–	–	–	–	–	–	1	–	1		
164	4124992a	Shaft		–	–	–	–	–	–	–	–	1	–		
165		Joint		1	1	1	–	–	–	–	–	–	–		

LAPIS SERVICES INC
(219)-464-9131
Amada Support, Rebuilds,
Sales and Fanuc Control Upgrade
AUTHORIZED CNC SYSTEM INTEGRATOR
FANUC

Index No.	Drawing No.	Parts Name	Type	Q'ty										Class	Note
				25	35S	50S	50	80S	80	100S	100	100L	125		
166	4124993	Bracket		–	–	–	–	–	–	1	1	1	1		
167		Cap screw	M6 x 14	–	–	–	–	–	–	2	2	2	2		
168		Spring washer	M6	–	–	–	–	–	–	2	2	2	2		
169		Washer	M6	–	–	–	–	–	–	2	2	2	2		
170		Nut	M6 type 2	–	–	–	–	–	–	2	2	2	2		
171	4124994	Guide		–	–	–	–	–	–	1	1	1	1		
172		Cap screw	M6 x 14	–	–	–	–	–	–	2	2	2	2		
173		Spring washer	M6	–	–	–	–	–	–	2	2	2	2		
174		Washer	M6	–	–	–	–	–	–	2	2	2	2		
175		Spherical support	SAR-17	–	–	–	–	–	–	1	1	1	1		
176		Cap screw	6 x 14	–	–	–	–	–	–	2	2	2	2		
177		Washer		–	–	–	–	–	–	2	2	2	2		

LAPIS SERVICES INC
(219)-464-9131
AUTHORIZED CNC SYSTEM FANUC INTEGRATOR
Amada Support, Rebuilds,
Sales and Fanuc Control Upgrade

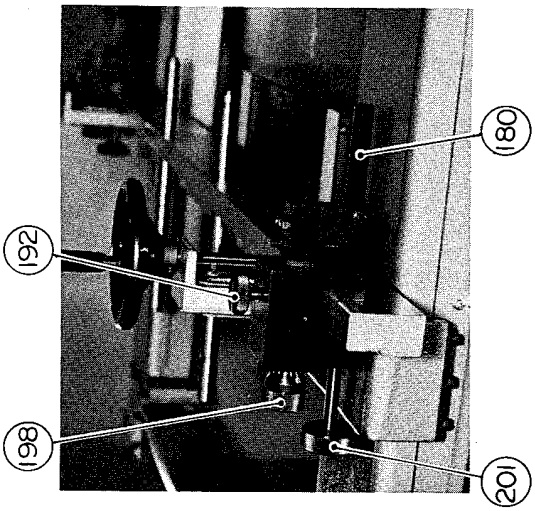

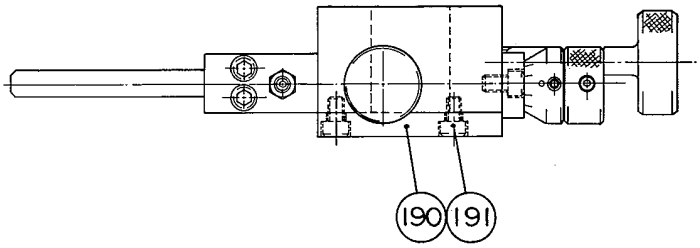

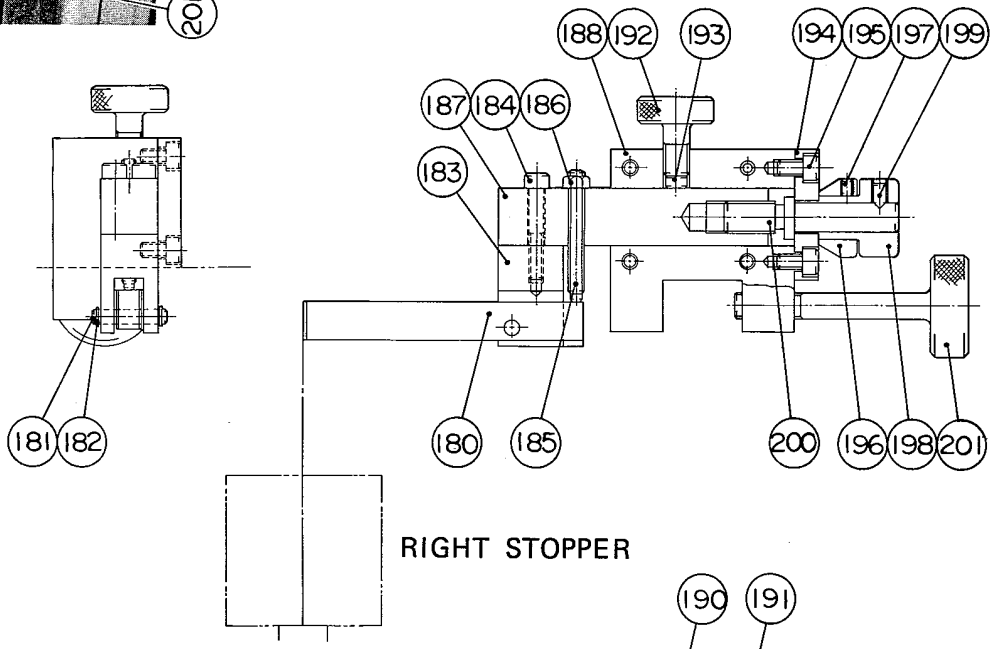

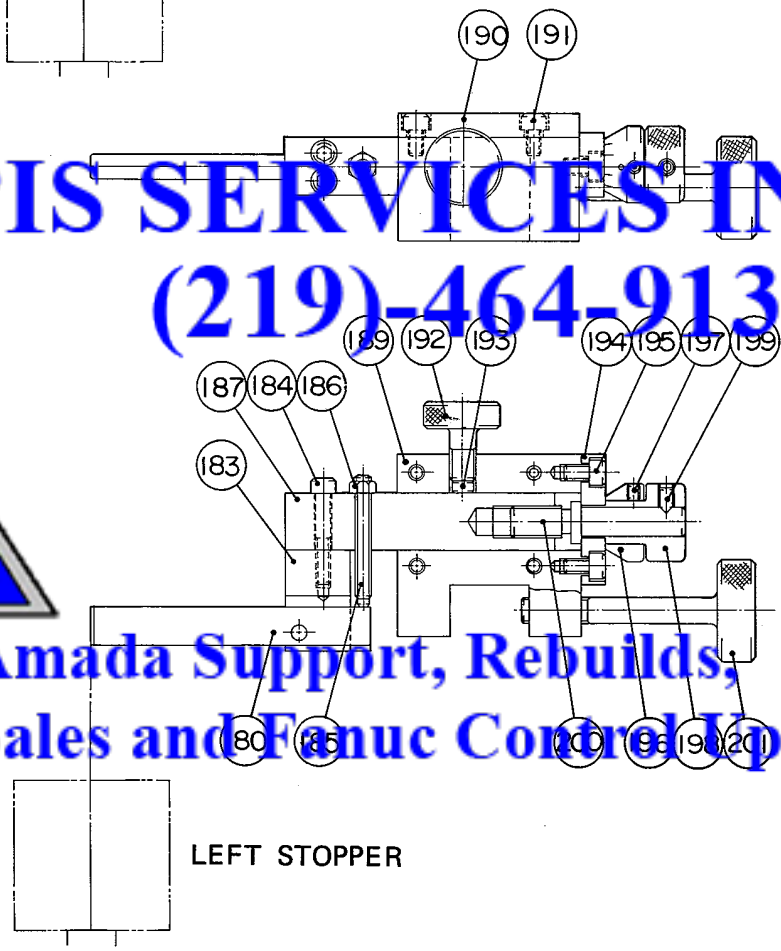

LAPIS SERVICES INC
(219)-464-9131
Amada Support, Rebuilds,
Sales and Fanuc Control Upgrade
AUTHORIZED CNC SYSTEM
FANUC
INTEGRATOR

Index No.	Drawing No.	Parts Name	Type	Q'ty										Class	Note
				25	35S	50S	50	80S	80	100S	100	100L	125		
178	4125065	Work stopper (R) ass'y		1	1	1	1	1	1	–	–	–	–	3	
178	4125066	Work stopper (R) ass'y		–	–	–	–	–	–	1	1	1	1	3	
179	4125069	Work stopper (L) ass'y		1	1	1	1	1	1	–	–	–	–	3	
179	4125070	Work stopper (L) ass'y		–	–	–	–	–	–	1	1	1	1	3	
180	4125073a	Stopper		2	2	2	2	2	2	–	–	–	–	3	
180	4125074a	Stopper		–	–	–	–	–	–	2	2	2	2	3	
181	4125077	Pin		2	2	2	2	2	2	2	2	2	2		
182		Snap ring	STW-6	4	4	4	4	4	4	4	4	4	4		
183	4125078b	Block		2	2	2	2	2	2	2	2	2	2		
184		Cap screw	M6 x 35	4	4	4	4	4	4	4	4	4	4		
185		Set screw (dog end)	x 0	2	[illegible]	[illegible]	[illegible]	[illegible]	2	2	2	[illegible]	2		
186		Nut	e 1	2	[illegible]	[illegible]	2	2	2	2	2	[illegible]	[illegible]		
187	4125079b	Bar		2	2	2	2	2	2	2	2	2	2		
188	4125080b	Support (R)		1	[illegible]	1	1	[illegible]	1	1	1	1	1		
189	4125089b	Support (L)		1	1	1	1	1	1	1	1	1	1		
190	4125081a	Plate		2	2	2	2	2	2	2	2	2	2		
191		Cap screw		4	4	4	4	4	4	4	4	4	4		
192	4125082	Screw		2	2	2	2	2	2	2	2	2	2		
193	4125083	Piece		2	2	2	2	2	2	2	2	2	2		
194	4125084	Plate		2	2	2	2	2	2	2	2	2	2		
195		C		4	4	4	4	4	4	4	4	4	4		
196	4125085a	Dial		2	2	2	2	2	2	2	2	2	2		
197		Set screw (dog		2	2	2	2	2	2	2	2	2	2		
198	4125086	Knob		2	2	2	2	2	2	2	2	2	2		
199		Set screw (con		2	2	2	2	2	2	2	2	2	2		
200	4125087	Screw		2	2	2	2	2	2	2	2	2	2		
201	4125088	Knob		2	2	2	2	2	2	2	2	2	2		

LAPIS SERVICES INC
(219)-464-9131
Amada Support, Rebuilds,
Sales and Fanuc Control Upgrade
AUTHORIZED CNC SYSTEM INTEGRATOR FANUC

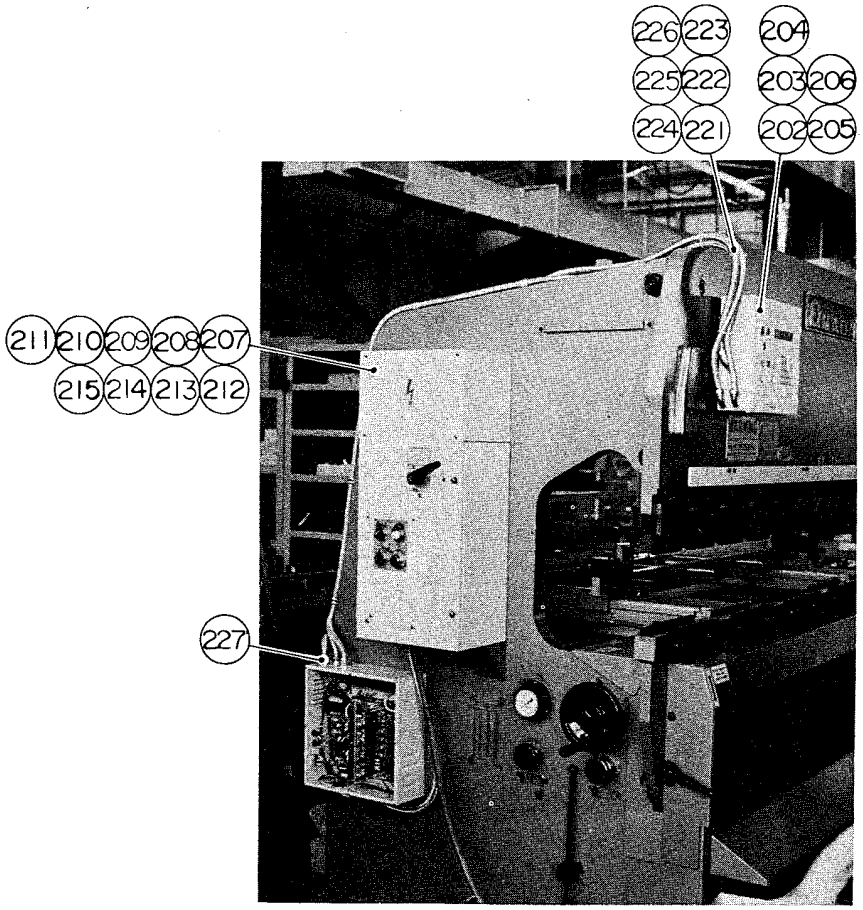

LAPIS SERVICES INC
(219)-464-9131

AUTHORIZED CNC SYSTEM INTEGRATOR
FANUC

Amada Support, Rebuilds,
Sales and Fanuc Control Upgrade

Index No.	Drawing No.	Parts Name	Type	Q'ty										Class	Note
				25	35S	50S	50	80S	80	100S	100	100L	125		
202		NC controller	SE-01900	1	1	1	1	1	1	1	1	1	1		
203		Connector	CSG-25	1	1	1	1	1	1	1	1	1	1		
204	4127417	Bracket		2	2	2	2	2	2	2	2	2	2		
205		Cap screw	M6 x 10	4	4	4	4	4	4	4	4	4	4		
206		Spring washer	M6	4	4	4	4	4	4	4	4	4	4		
207	4127379	Box		1	1	1	1	1	1	1	1	1	1		
208		Pan head machine screw	M6 x 10	4	4	4	4	4	4	4	4	4	4		
209		Spring washer	M6	4	4	4	4	4	4	4	4	4	4		
210	4127381	Cover		1	1	1	1	1	1	1	1	1	1		
211		Pan head machine screw	M5 x 10	4	4	4	4	4	4	4	4	4	4		
212		Spring washer	[illegible]	[illegible]	[illegible]	[illegible]	[illegible]	[illegible]	4	4	4	[illegible]	4		
213		Transformer	[illegible]4M-60	[illegible]	[illegible]	[illegible]	[illegible]	[illegible]	1	1	1	[illegible]	[illegible]		
214		Pan head machine screw	[illegible]	4	4	4	4	4	4	4	4	4	4		
215		Spring washer	[illegible]	4	4	4	4	4	4	4	4	4	4		
216		Terminal block	[illegible]	4	4	4	4	4	4	4	4	4	4		
217		Channel base	[illegible]	1	1	1	1	1	1	1	1	1	1		
218		Separator	[illegible]	1	1	1	1	1	1	1	1	1	1		
219		Clip	[illegible]	2	2	2	2	2	2	2	2	2	2		
220		Pan hea[illegible]	[illegible]	2	2	2	2	2	2	2	2	2	2		
221		Flex[illegible]	[illegible]	1	1	1	1	1	1	1	1	1	1		
222		C[illegible]	[illegible]	3	3	3	3	3	3	3	3	3	3		
223		Collar	[illegible]	4	4	4	4	4	4	4	4	4	4		
224		Saddle	[illegible]	7	7	7	7	7	7	7	7	7	7		
225		Pan head mach[illegible]	[illegible]	7	7	7	7	7	7	7	7	7	7		
226		Terminal bush[illegible]	[illegible]	1	1	1	1	1	1	1	1	1	1		
227		Connector	[illegible]	1	1	1	1	1	1	1	1	1	1		

LAPIS SERVICES INC
(219)-464-9131
Amada Support, Rebuilds,
Sales and Fanuc Control Upgrade
AUTHORIZED CNC SYSTEM INTEGRATOR
FANUC