PRESS BRAKE (ZII)

RG35S–100

OPERATOR'S MANUAL

LAPIS SERVICES INC
(219)-464-9131

Amada Support, Rebuilds,
Sales and Fanuc Control Upgrade

RG25-125-E02-200510

PREFACE Read this manual carefully to obtain a thorough knowledge of machine operation and maintenance. Be sure to follow the instructions to ensure proper procedures and prevent injuries and accidents. Do not operate the machine by guesswork. Keep the manual at hand and refer to it whenever you are not sure of how to perform any of the procedures.

LAPIS SERVICES INC
(219)-464-9131

VII) RG35S-100
A CO., LTD.

tion may be photocopied or otherwise reproduced with-
rmission of AMADA CO., LTD.

Amada Support, Rebuilds,
Sales and Fanuc Control Upgrade

Printed in Japan

CONTENTS

Part I **Safety** ***I-1***

1. Safety rules *I-2*
2. DANGER and WARNING plates *I-10*

Part II **Description** ***II-1***

1. Functions *II-2*
2. General view *II-3*
3. Specifications *II-5*
4. Dimensions *II-6*
5. Standard accessories *II-9*
6. Options *II-10*

Part III **Installation** ***III-1***

1. Summary *III-2*
   - 1-1. Environmental conditions *III-2*
   - 1-2. Input power source *III-2*
   - 1-3. Things to be supplied by customer *III-3*
2. Installation procedures *III-4*
   - 2-1. Location *III-4*
   - 2-2. Lifting *III-5*
   - 2-3. Foundation *III-6*
   - 2-4. Placing *III-6*
   - 2-5. Leveling *III-6*
   - 2-6. Supplying hydraulic oil *III-8*
   - 2-7. Supplying electric power *III-8*

Controls ***IV-1***

- Controls on electrical enclosure *IV-2*
- ntrols on upper beam *IV-3*
- aulic equipment controls *IV-4*
- ontrols *IV-6*

(Continued on next page.)

LAPIS SERVICES INC
(219)-464-9131
Amada Support, Rebuilds,
Sales and Fanuc Control Upgrade
AUTHORIZED CNC SYSTEM INTEGRATOR FANUC

Part V **Operation** ***V-1***
1. Inspection before start of day's work *V-3*
2. Preparing for operation *V-3*
3. Turning on power *V-5*
4. Removing tools *V-6*
4-1. Preparing for removing tools *V-6*
4-2. Removing punches *V-8*
4-3. Removing dies *V-9*
5. Installing tools *V-11*
5-1. Preparing for installing tools *V-11*
5-2. Installing dies *V-12*
5-3. Installing punches *V-14*
6. Preparing for special bending *V-16*
6-1. Installing and removing punch holders *V-16*
6-1-1. Removing punch holders *V-16*
6-1-2. Installing punch holders *V-17*
6-2. Installing punches rearside front *V-18*
6-3. Installing wide dies *V-19*
7. Other uses *V-20*
7-1. Adjusting punch holders *V-20*
7-2. Using one-touch punch holders (option) *V-23*
7-2-1. Installing and removing punches from front *V-25*
7-2-2. Installing and removing punches by sliding them along groove of rear clamping plates *V-28*
7-2-3. Installing and removing rear clamping plates *V-29*
Aligning tools *V-32*
RG3AS *V-33*
RG50, RG80, and RG100 ..... *V-34*
ng tool origin *V-37*
ing operation *V-38*
ting rising speed change position *V-38*
g multiple opening limit *V-39*
worksheet *V-40*
orarily setting multiple closing limit *V-40*
worksheet *V-41*
end angle *V-42*
off power *V-44*
hooting *V-46*
mergency stop condition *V-48*

LAPIS SERVICES INC
(219)-464-9131
Amada Support, Rebuilds,
Sales and Fanuc Control Upgrade

Part VI **Maintenance** ***VI-1***
1. Inspection before start of day's work *VI-2*
2. Maintaining hydraulic system *VI-4*
   2-1. Checking hydraulic oil level *VI-4*
   2-2. Changing hydraulic oil *VI-5*
   2-3. Maintaining tools *VI-6*
3. Lubrication *VI-7*
4. Hydraulic circuit diagrams *VI-8*
   4-1. RG35S *VI-8*
   4-2. RG50, RG80, and RG100 ..... *VI-10*
5. Electric circuit diagrams *VI-13*

LAPIS SERVICES INC
(219)-464-9131
AUTHORIZED CNC SYSTEM INTEGRATOR
FANUC
Amada Support, Rebuilds,
Sales and Fanuc Control Upgrade

LAPIS SERVICES INC
(219)-464-9131

Amada Support, Rebuilds,
Sales and Fanuc Control Upgrade

Part I

Safety

1. Safety rules *I-2*
2. DANGER and WARNING plates.....*I-10*

LAPIS SERVICES INC
(219)-464-9131
AUTHORIZED CNC SYSTEM INTEGRATOR
FANUC
Amada Support, Rebuilds,
Sales and Fanuc Control Upgrade

1. SAFETY RULES

Observe these safety rules to prevent injuries and accidents:

a) Never modify the machine. If the control circuit or other part of the machine is modified, the ram may malfunction.

b) Whenever the machine is not in use, remove the key from the POWER ON/OFF keyswitch, and hand it to the chief operator for custody.

c) Assign trained operators to the operation and maintenance of the machine.

d) Inspect the machine before the start of the day's work.

e) Install the machine with a rear clearance of at least 1000 mm {40 in.} where it is not exposed to direct sunlight. If the electrical equipment of the machine is overheated as a result, the machine may malfunction.

f) Before starting the operation of the machine, check that there are no persons and obstacles around the machine. Pay particular attention to the rear of the machine. Never place hand tools and parts on the installed dies and the lower beam.

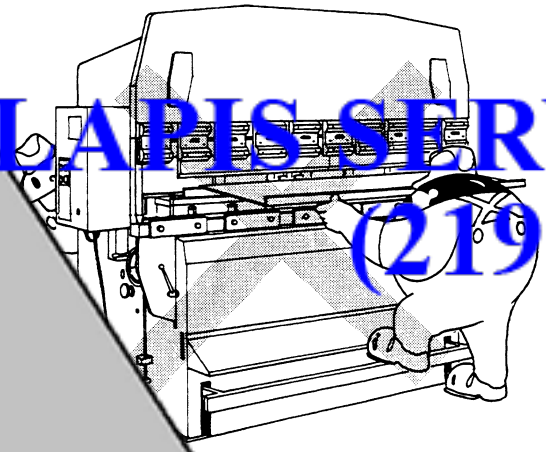

LAPIS SERVICES INC
(219)-464-9131

ween the punches and dies.

Amada Support, Rebuilds,
Sales and Fanuc Control Upgrade

h) When changing the tools, strictly observe the following rules:

- Before installing and removing the dies, turn the POWER ON/OFF keyswitch to OFF, remove the key from the keyswitch, and keep it by yourself. (Install and remove the dies as described in “4. Removing tools” and “5. Installing tools” in Part V.)

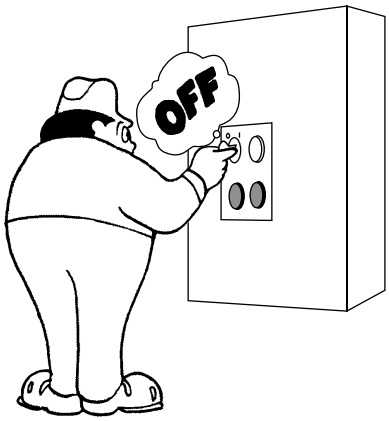

- Before installing and removing the punches, turn the multiple closing limit setting handwheel to close the ram to the desired position, turn the POWER ON/OFF keyswitch to OFF, remove the key from the keyswitch, and keep it by yourself. Never put your hand or hands between the punch and die to support the punch. (Install and remove the punches as described in “4. Removing tools” and “5. Installing tools” in Part V.)

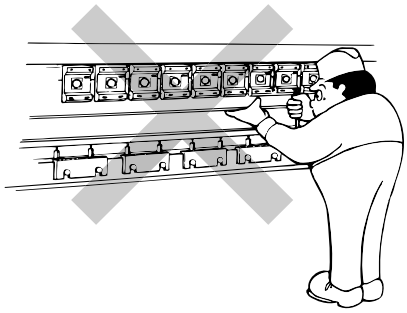

- ecurely fix the punches, dies, and die lders before applying pressure to m.

u install and remove the tools sistant operator or e sure to coordinate your m.

nds between the support a punch,

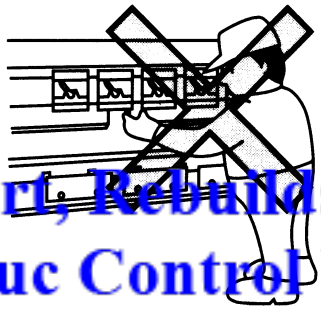

tall a tool by sliding it care not to get your etween it and another talled.

LAPIS SERVICES INC
(219)-464-9131
Amada Support, Rebuilds,
Sales and Fanuc Control Upgrade

If your machine is equipped with optional one-touch punch holders, keep the following rules:

- When applying pressure to the punches or bending the worksheet, turn the punch holder levers to the position Ⓑ.
- Install or remove the punch holder levers only in the position Ⓑ.
- Affix the punch holder lever position sticker in an easy-to-see place to prevent procedural mistakes.

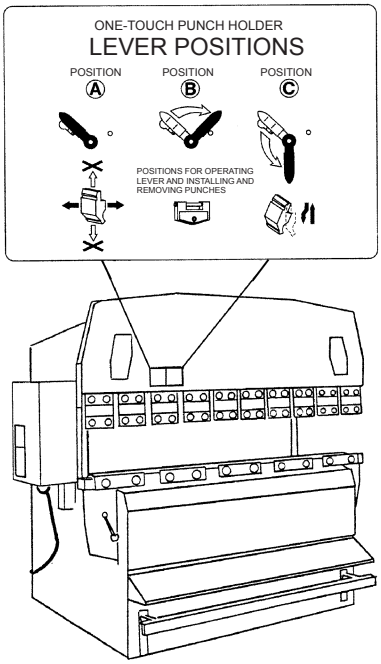

i) When you bend worksheets with an assistant operator or operators, you must press the bar pedal after fully ensuring the safety of all of them.

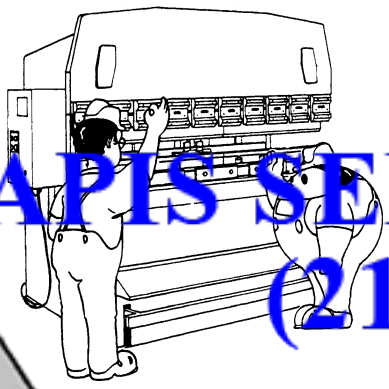

LAPIS SERVICES INC
(219)-464-9131
Amada Support, Rebuilds,
Sales and Fanuc Control Upgrade

j) Before adjusting the stoppers, turn the POWER ON/OFF keyswitch to OFF, remove the key from the keyswitch, and keep it by yourself. Be sure to adjust the stoppers from the rear of the machine.

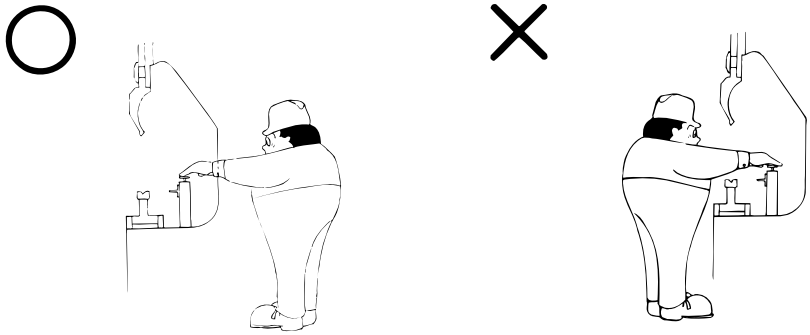

k) Correctly set the position where the bending speed of the ram is to be changed. If this position is not correctly set, the worksheet may start to bend unexpectedly.

l) When bending a small worksheet, set the stroke length of the ram to 6 mm {0.24 in.} or less, and hold the worksheet as shown on the next page. Take care not to get your fingers pinched between the punches and dies or between the punches and worksheet.

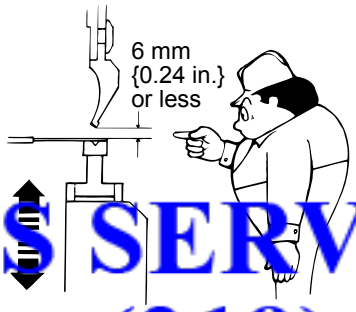

LAPIS SERVICES INC
(219)-464-9131
AUTHORIZED CNC SYSTEM INTEGRATOR
FANUC
Amada Support, Rebuilds,
Sales and Fanuc Control Upgrade

Hold the worksheet as shown below.

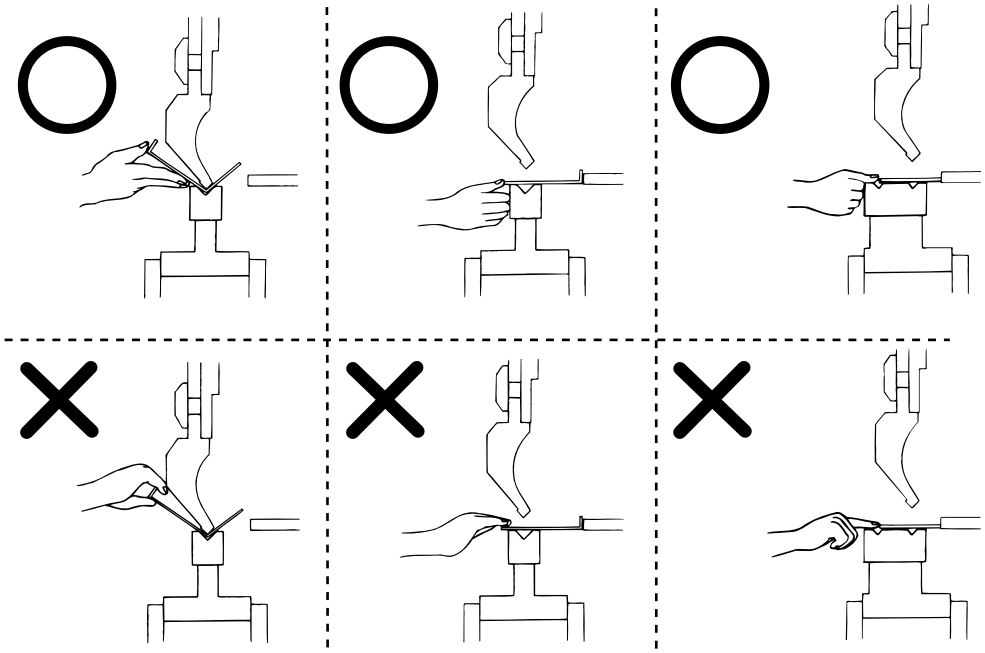

m) If your machine is equipped with an optional backgauge, push the worksheet against the stoppers of the backgauge after the backgauge is properly positioned. Otherwise the worksheet may be pushed forward when the backgauge moves forward.

n) Use Amada genuine punches and dies on the machine. The machine performs [illegible]rious controls by reference to the Amada genuine punches and dies. [illegible] genuine punches and dies are different in brittleness and allowa[illegible]ce from the gen[illegible] punches and dies. Use of such non-genu[illegible] cause various troubles and detract from safety of the ma[illegible]

o) [illegible]ols a pressure [illegible] allowable [illegible] Unless a [illegible] them, the [illegible] a [illegible]V- [illegible] of the machine [illegible] breakage.

LAPIS SERVICES INC
(219)-464-9131
Amada Support, Rebuilds,
Sales and Fanuc Control Upgrade
AUTHORIZED CNC SYSTEM INTEGRATOR FANUC

p) When bending a large worksheet, be careful of its springing upward. Hold one side of the worksheet or otherwise be ready for its springing upward.

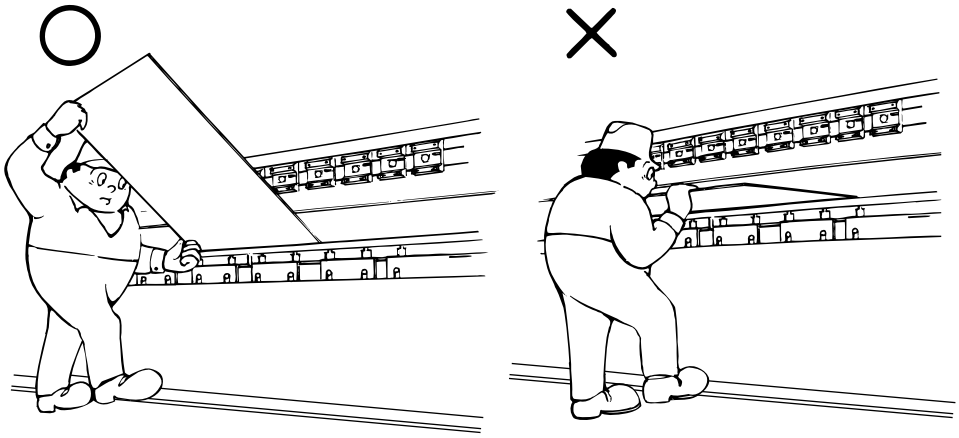

q) Before bending each worksheet, check that the tools are securely installed and tightened. With a sharp bend or U-bend, the punches and dies may eat into the worksheet and fall together with the worksheet.

LAPIS SERVICES INC
(219)-464-9131
Amada Support, Rebuilds,
Sales and Fanuc Control Upgrade

r) When rebending the same worksheet, align the nose line of the punches with the bend line of the worksheet. If the worksheet is rebent without aligning the lines, abnormal noise may be produced, and the tools may break and scatter in a dangerous manner.

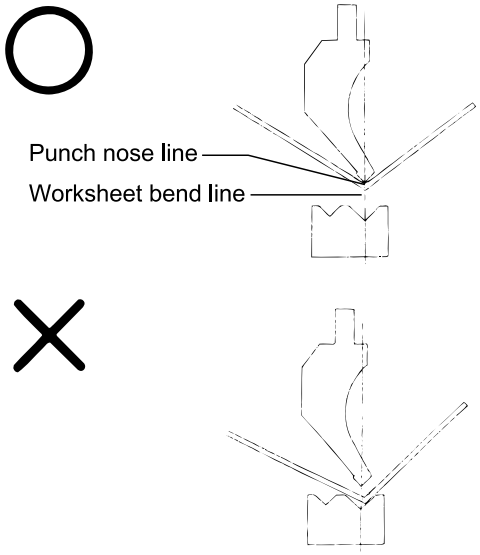

s) Whenever trouble occurs during the operation of the machine, press one of the EMERGENCY STOP buttons, turn the POWER ON/OFF keyswitch to OFF, remove the key from the keyswitch, keep it by yourself, and fix the problem. When picking a worksheet that has fallen into the machine, be sure to do so from the rear of the machine. As soon as the machine develops trouble, report it to the chief operator.

LAPIS SERVICES INC
(219)-464-9131
Amada Support, Rebuilds,
Sales and Fanuc Control Upgrade

t) If the machine suddenly loses its power due to a power failure, the ram may open to the maximum opening limit. In such a case, hold the worksheet over the ram so that it does not fall.

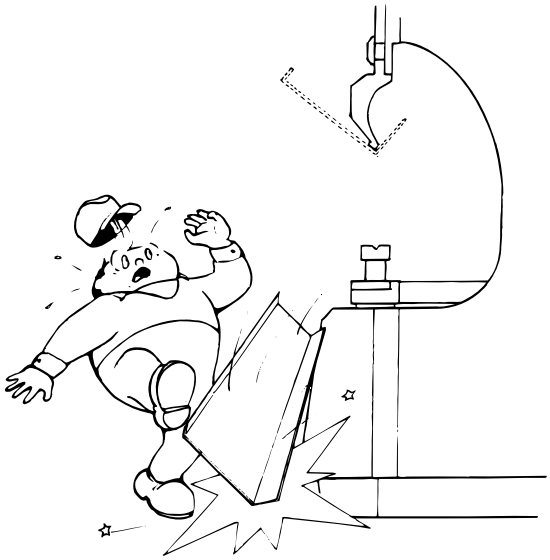

u) Before walking away from the machine, turn the POWER ON/OFF keyswitch to OFF, remove the key from the keyswitch, and keep it by yourself.

v) Before opening the electrical enclosure, be sure to turn off the machine circuit breaker. You may receive an electric shock if you touch any parts in the electrical enclosure.

LAPIS SERVICES INC
(219)-464-9131

ure to perform periodic maintenance on the machine. For the items of nance to be performed, refer to Part VI, Maintenance.

ntaining or cleaning the machine, turn off the shop circuit breaker, sidual hydraulic pressure in the machine, and post a sign to orkers that the machine is under maintenance.

e machine, ask AMADA about how to move the machine. the machine may turn over.

AUTHORIZED CNC SYSTEM FANUC INTEGRATOR
Amada Support, Rebuilds,
Sales and Fanuc Control Upgrade

2. DANGER AND WARNING PLATES

Keep the DANGER and WARNING plates well noticeable and never remove them.

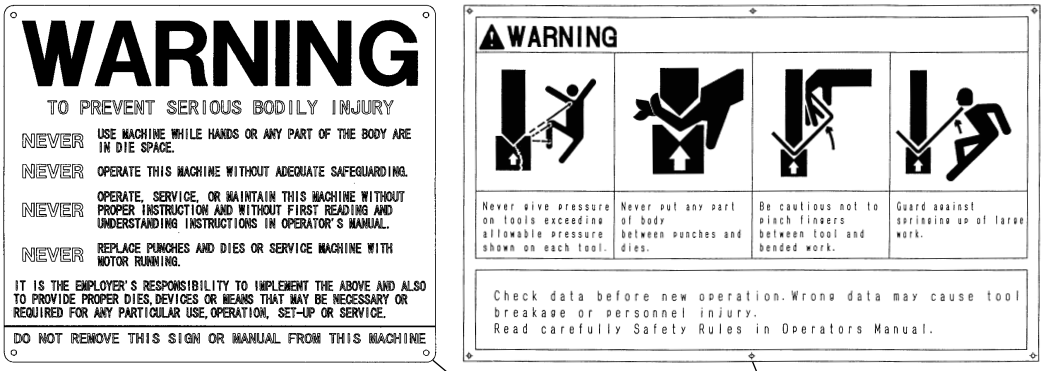

LAPIS SERVICES INC
(219)-464-9131
AUTHORIZED CNC SYSTEM INTEGRATOR
FANUC
Amada Support, Rebuilds,
Sales and Fanuc Control Upgrade

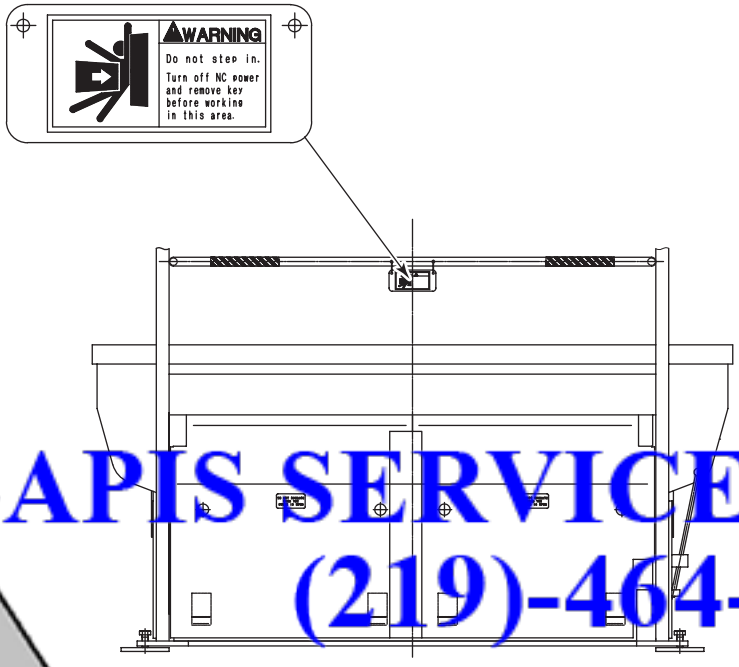

LAPIS SERVICES INC
(219)-464-9131

ss level

DANGER	Indicates an imminently hazardous situation which, if not avoided, will result in death or serious injury.
WARNING	Indicates a potentially hazardous situation which, if not avoided, could result in death or serious injury.
CAUTION	Indicates a potentially hazardous situation which, if not avoided, may result in minor or moderate injury.

Amada Support, Rebuilds,
Sales and Fanuc Control Upgrade

LAPIS SERVICES INC
(219)-464-9131

Amada Support, Rebuilds,
Sales and Fanuc Control Upgrade

Part II

Description

1. Functions *II-2*
2. General view *II-3*
3. Specifications *II-5*
4. Dimensions *II-6*
5. Standard accessories *II-9*
6. Options *II-10*

LAPIS SERVICES INC
(219)-464-9131

AUTHORIZED CNC SYSTEM INTEGRATOR
FANUC

Amada Support, Rebuilds,
Sales and Fanuc Control Upgrade

1. FUNCTIONS

This machine is a hydraulic press brake of the central pressure application and parallel rising type. It has the following features:

- The hydraulic circuit is simplified to minimize oil leakage and facilitate maintenance.
- A main cylinder is installed at the center of the ram to minimize the distortion produced in the upper and lower beams during pressure application.
- Installed at the center of the ram, a bearing guide unit slides up and down along the main cylinder surface that doubles as sliding surface, in order to keep the upper and lower beams accurately parallel.
- A punch-to-die clearance setting unit allows the ram stroke length to be set to a required minimum and the working efficiency to be enhanced as a result.
- The bar pedal can be pressed as required to adjust the ram approach speed or stop the ram mid-stroke. This is ideal for bending worksheets on which scribed lines must be aligned with the punch nose line.
- Punch holders and die holders are installed in the upper and lower beams and provide for easy installation of punches and dies, respectively.
- Standard tools are light in mass, easy to carry, available in many types, and adaptable to a variety of bending operations. (For the tools, refer to their catalogs.)

LAPIS SERVICES INC
(219)-464-9131
AUTHORIZED CNC SYSTEM INTEGRATOR
FANUC
Amada Support, Rebuilds,
Sales and Fanuc Control Upgrade

2. GENERAL VIEW

NOTE

● This drawing shows the general view of the RG50 machine.

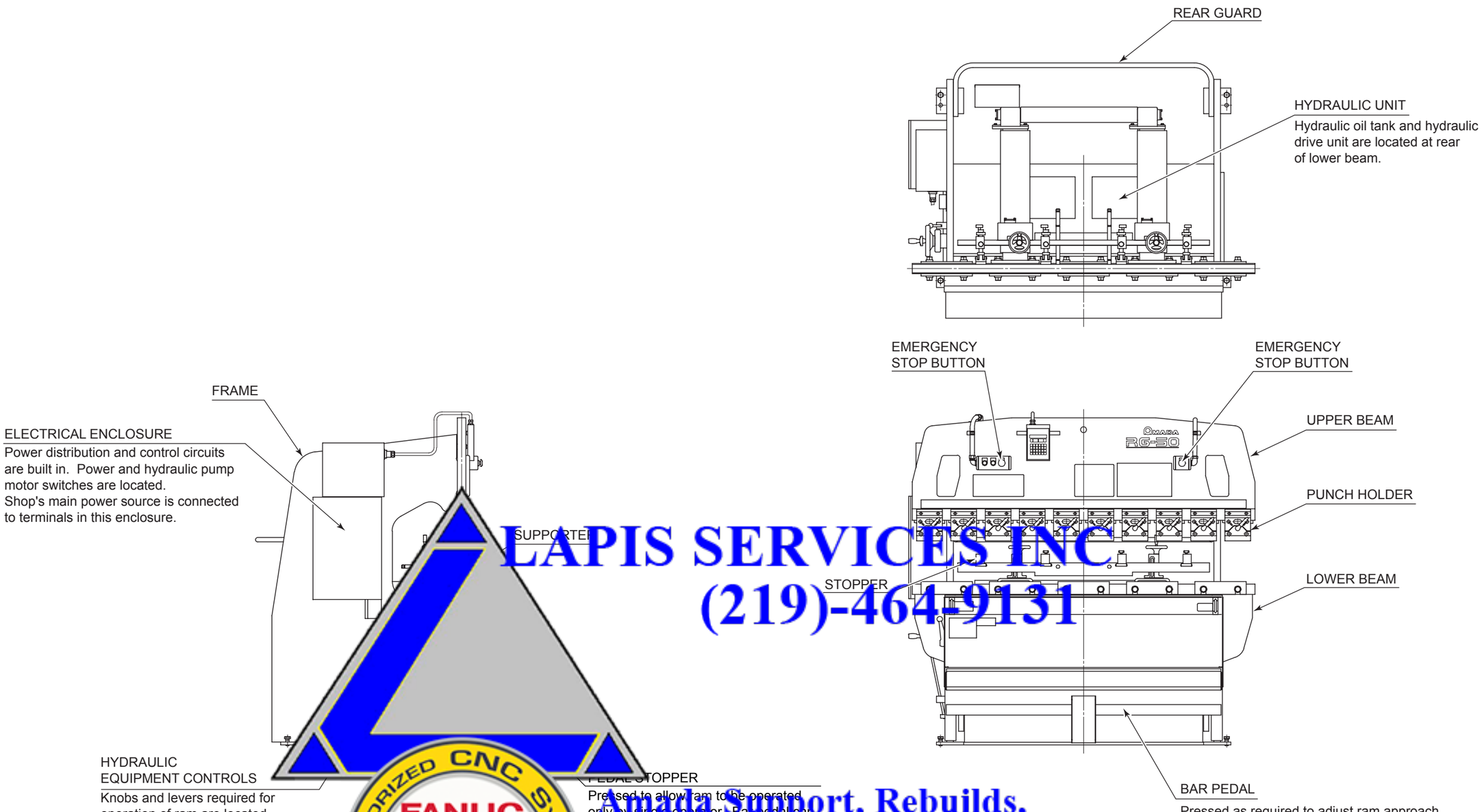

LAPIS SERVICES INC
(219)-464-9131
Amada Support, Rebuilds,
Sales and Fanuc Control Upgrade

LAPIS SERVICES INC
(219)-464-9131

Amada Support, Rebuilds,
Sales and Fanuc Control Upgrade

3. SPECIFICATIONS

Metric unit system (International system of units)

Item	Model			
	RG35S	RG50	RG80	RG100
Maximum bend length (mm)	1250	2085	2505	3100
Press capacity (kN)	343	490	784	980
Stroke length (mm)	100	100	100	100
Open height without punch holders (mm)	370	370	370	370
Approach speed at 50/60 Hz (mm/sec)	46/55	38/45	38/45	49/59
Bending speed at 50/60 Hz (mm/sec)	8/9.5	7/8.5	7/8.5	8.3/10.1
Moving-down speed (mm/sec)	40	35	52	52
Number of main cylinders (number of auxiliary cylinders)	1	1 (2)	1 (2)	1 (2)
Hydraulic pump motor output (kW)	2.2	3.7	5.5	7.5
Hydraulic oil tank capacity (L)	26	51	51	65
Machine mass (kg)	1600	2900	5100	6400

Power supply of 380/400/460 V

Item	Model			
	RG35S	RG50	RG80	RG100
Pr[illegible]y power cable (mm^2)	2	2	3.5	8
[illegible]rent (A)	9[illegible]	[illegible]13[illegible]	2[illegible].0	30[illegible]

LAPIS SERVICES INC
(219)-464-9131

[illegible]of 200/230 V

[illegible]	Model			
	RG35S	RG50	RG80	RG100
[illegible]	3.5	3.5	8	14
[illegible]	17.0	22.3	38.0	49.1

AUTHORIZED CNC SYSTEM INTEGRATOR
FANUC
Amada Support, Rebuilds,
Sales and Fanuc Control Upgrade

English unit system

Item	Model			
	RG35S	RG50	RG80	RG100
Maximum bend length (in.)	49.2	82.1	98.6	122.0
Press capacity (US tonf)	38.6	55.1	88.2	110.2
Stroke length (in.)	3.9	3.9	3.9	3.9
Open height without punch holders (in.)	14.6	14.6	14.6	14.6
Approach speed at 50/60 Hz (ips)	1.8/2.2	1.5/1.8	1.5/1.8	1.9/2.3
Bending speed at 50/60 Hz (ips)	0.31/0.37	0.28/0.33	0.28/0.33	0.33/0.40
Moving-down speed (ips)	1.6	1.4	2.0	2.0
Number of main cylinders (number of auxiliary cylinders)	1	1 (2)	1 (2)	1 (2)
Hydraulic pump motor output (HP)	3.0	5.0	7.4	10.1
Hydraulic oil tank capacity (US gal)	6.9	13.5	13.5	17.2
Machine mass (lb)	3530	6390	11250	14110

Power supply of 380/400/460 V

Item	Model			
	RG35S	RG50	RG80	RG100
Primary power cable (mm^2)	2	2	3.5	8
Load current (A)	9.1	13.2	23.0	30.0

LAPIS SERVICES INC
(219)-464-9131

Power [illegible]0/230 V

[illegible]	Model			
	RG35S	RG50	RG80	RG100
[illegible]	3.5	3.5	8	14
[illegible]	17.0	22.3	38.0	49.1

AUTHORIZED CNC SYSTEM INTEGRATOR
FANUC
Amada Support, Rebuilds,
Sales and Fanuc Control Upgrade

4. DIMENSIONS

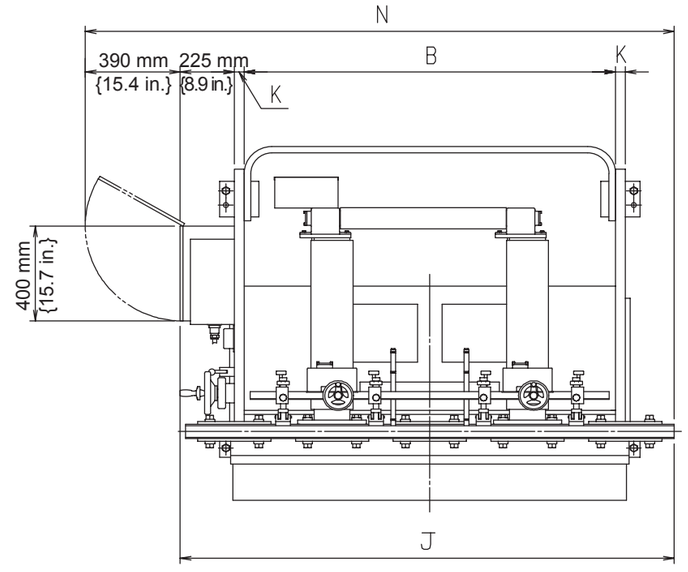

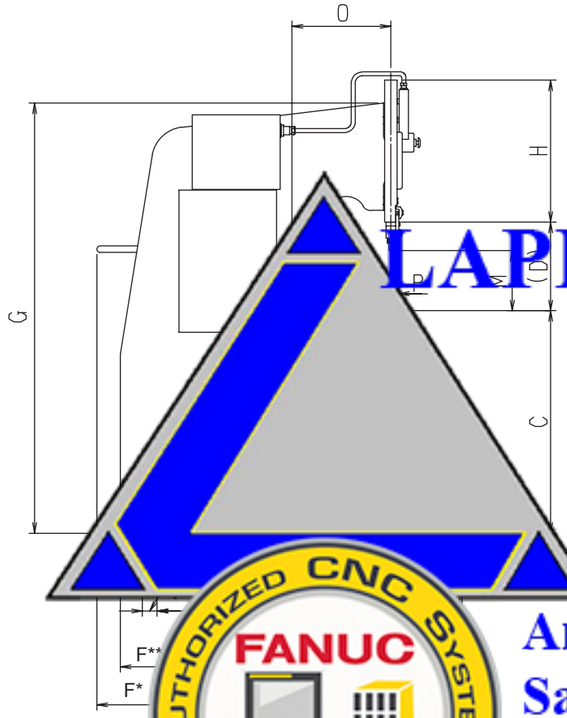

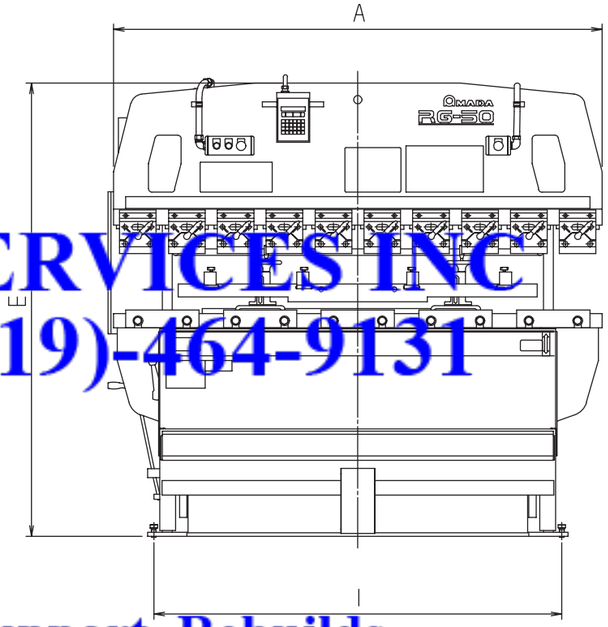

LAPIS SERVICES INC
(219)-464-9131
Amada Support, Rebuilds,
Sales and Fanuc Control Upgrade
AUTHORIZED CNC SYSTEM INTEGRATOR
FANUC

*Depth of RG65S, RG50, RG80
**Depth of RG100

Unit: mm

Model	A	B	C	(D)	E	F	G	H	I	J	K	L	M	N	O	P
RG35S	1200	1020	935	370	1955	1495	1800	650	920	1355	25	445	250	1745	200	60
RG50	2000	1520	940	370	1910	1495	1820	600	1670	2025	40	970	250	2410	400	60
RG80	2400	2050	945	370	2065	1495	1920	750	2240	2515	60	970	250	2895	400	60
RG100	3000	2550	1035	370	2305	1555	2110	900	2750	3065	60	1090	250	3445	400	90

Unit: in.

Model	A	B	C	(D)	E	F	G	H	I	J	K	L	M	N	O	P
RG35S	47.2	40.2	36.8	14.6	77	58.9	70.9	25.6	36.2	53.3	0.98	17.5	9.8	68.7	7.9	2.4
RG50	78.7	59.8	37.0	14.6	75.2	58.9	71.7	23.6	65.7	79.7	1.57	38.2	9.8	94.9	15.7	2.4
RG80	94.5	80.7	37.2	14.6	81.3	58.9	75.6	29.5	88.2	99.0	2.36	38.2	9.8	114.0	15.7	2.4
RG100	118.1	100.4	40.7	14.6	90.7	61.2	83.1	35.4	108.3	120.7	2.36	42.9	9.8	135.6	15.7	3.5

LAPIS SERVICES INC
(219)-464-9131
Amada Support, Rebuilds,
Sales and Fanuc Control Upgrade

5. STANDARD ACCESSORIES

No.	Item	Description		Qty	Applicable model
1	Tool set	Tool box		1	ALL
		Single-ended wrench	30 mm		
			13 mm		
		45° offset box wrench	14 × 17 mm		
		Allen wrench	8 mm, long type		
			5 mm		
		Brass bar	ϕ20 × 200 mm		
		Hammer	1/2 pound		
2	Hydraulic oil	Super Hydraulic oil 56 (Nippon oil)		26 L {6.9 US gal}	RG35S
				51 L {13.5 US gal}	RG50, 80
				65 L {17.2 US gal}	RG100
3	Stopper			2 (0)	ALL
4	Supporter			4 (2)	ALL
5	2V-die holder	Size L: 830 mm {32.7 in.} long, 75 mm {3.0 in.} high		1	RG35S
				2	RG50
				3	RG80
				4	RG100
		Size S: 412 mm {16.2 in.} long, 75 mm {3.0 in.} high		1	RG35S, 50
				6	RG35S
				1	RG50
				1	RG80
				15	RG100
		LS-6		2	ALL

es enclosed in parentheses apply when machine is equipped with optional

LAPIS SERVICES INC
(219)-464-9131
AUTHORIZED CNC SYSTEM INTEGRATOR FANUC
Amada Support, Rebuilds,
Sales and Fanuc Control Upgrade

6. OPTIONS

Name	Function
Auto-backgauge system	• Can set worksheet contact positions (bending positions) for up to 99 processes. • Allows continuous bending by programmed operation. • Displays set values and current position of backgauge by LEDs. • Has such functions as elongation compensation, backlash compensation, and timing.
Remote foot pedals	• Like bar pedal, open and close ram.
RR-type front gauge	• Installed at front of machine to support worksheet with stoppers and used for positioning worksheet at front of machine.
Worksheet follower	• Supports large worksheet during bending while following bend angle.
One-touch punch holders*	• Allow punches to be installed and removed by levers without use of any other tool.
Dial-type punch holders*	• Allow height of punches to be adjusted with dials.
Double-side punch holders*	• Allow punches to be installed on both of front and rear sides.
Optical safety device	• Emits light beams at front of installed punches and dies and automatically stops machine as soon as two or more light beams are interrupted by operator's body parts or other objects.
Side guards	• Close up gaps in left and right frames and prevent operator's body parts from entering machine.
Two-hand control buttons	• Simultaneously pressed to open and close ram in place of bar pedal.
Two-person	• Simultaneously pressed by two persons to open and close ram in place of bar pedal.

*Stand

LAPIS SERVICES INC
(219)-464-9131
Amada Support, Rebuilds,
Sales and Fanuc Control Upgrade

Part III

Installation

1. Summary *III-2*
   1-1. Environmental conditions *III-2*
   1-2. Input power source *III-2*
   1-3. Things to be supplied by customer *III-3*
2. Installation procedures *III-4*
   2-1. Location *III-4*
   2-2. Lifting *III-5*
   2-3. Foundation *III-6*
   2-4. Placing *III-6*
   2-5. Leveling *III-6*
   2-6. Supplying hydraulic oil *III-8*
   2-7. Supplying electric power *III-8*

LAPIS SERVICES INC
(219)464-9131

the machine is delivered to you directly from AMADA, it is usually ted by the specialized carrier. Instruct them where to install the

a machine installation place where the space required for ding, part unloading and machine maintenance can be here the machine can be installed on a flat surface ubsidence. For details, refer to "2. Installation

IING

● Moving or carrying the machine may not only damage the machine, but also is dangerous. Ask a qualified contractor to perform this work.

Amada Support, Rebuilds,
Sales and Fanuc Control Upgrade

1. SUMMARY

1-1. Environmental conditions

- Keep the machine at least 10 m {33 ft} away from a welder or any other equipment that may produce electrical noise and magnetic fields.
- Where the ambient temperature is not higher than 5 °C {41 °F}, keep the machine and hydraulic pump motor energized during the day's work.
- The higher the humidity in the place where the machine is installed, the lower the insulation performance of its electric parts becomes. This results in the premature degradation of the electric parts. Do not install the machine in such a humid place.
- Install the machine in a place where it is not subjected to dust, dirt, and organic or corrosive gases.

1-2. Input power source

Power requirement: 200/230/380/400/460 VAC±10% (transformer tap and motor wiring is required), 3 phases, 50/60 Hz±1 Hz

NOTICE

- Supply the machine from a power source independent of a welder or any other equipment that may produce line voltage variations. Otherwise the machine may misoperate.

LAPIS SERVICES INC
(219)-464-9131
Amada Support, Rebuilds,
Sales and Fanuc Control Upgrade

1-3. Things to be supplied by customer

Primary power cable

Four-conductor VCT cable (600V polyvinyl chloride insulated cabtyre cable)

380/400/460 V specification

Model	Each conductor size	Current carrying capacity
RG35S	2 mm^2	9.1 A
RG50		13.2 A
RG80	3.5 mm^2	23.0 A
RG100	8 mm^2	30.0 A

200/230 V specification

Model	Each conductor size	Current carrying capacity
RG35S	3.5 mm^2	17.0 A
RG50		22.3 A
RG80	8 mm^2	38.0 A
RG100	14 mm^2	49.1 A

LAPIS SERVICES INC
(219)-464-9131
AUTHORIZED CNC SYSTEM INTEGRATOR
FANUC
Amada Support, Rebuilds,
Sales and Fanuc Control Upgrade

2. INSTALLATION PROCEDURES

2-1. Location

Select a place where an ample space can be secured for the machine by paying full attention to the required floor area and the following items:

- There must be no pillars and other obstacles where the tools are installed and removed. (At least 835 mm {33 in.} long tools must be able to be horizontally installed and removed through the left and right frame gaps of the machine.)
- The ceiling must be at least 1000 mm {40 in.} from the top of the machine. (Take the height of the base plates into account.)
- There must be an additional space to locate a tool storage case and any other necessary items.
- Space must be available for worksheet loading, part unloading, machine maintenance, and other tasks.

  A space of 1000 mm {40 in.} or more must be available at the rear of the machine.

  An enough space must be available for the cover of the electrical enclosure to be opened.

  A space of 1000 mm {40 in.} or more must be available from the cover edge at the right side of the ram.

NOTICE

- Do not install the machine in a place where it is exposed to dust from such operations as sandblasting and to direct sunlight, rain and wind.
- It is ideal to install the machine on a concrete floor to prevent deflection due to ground subsidence.

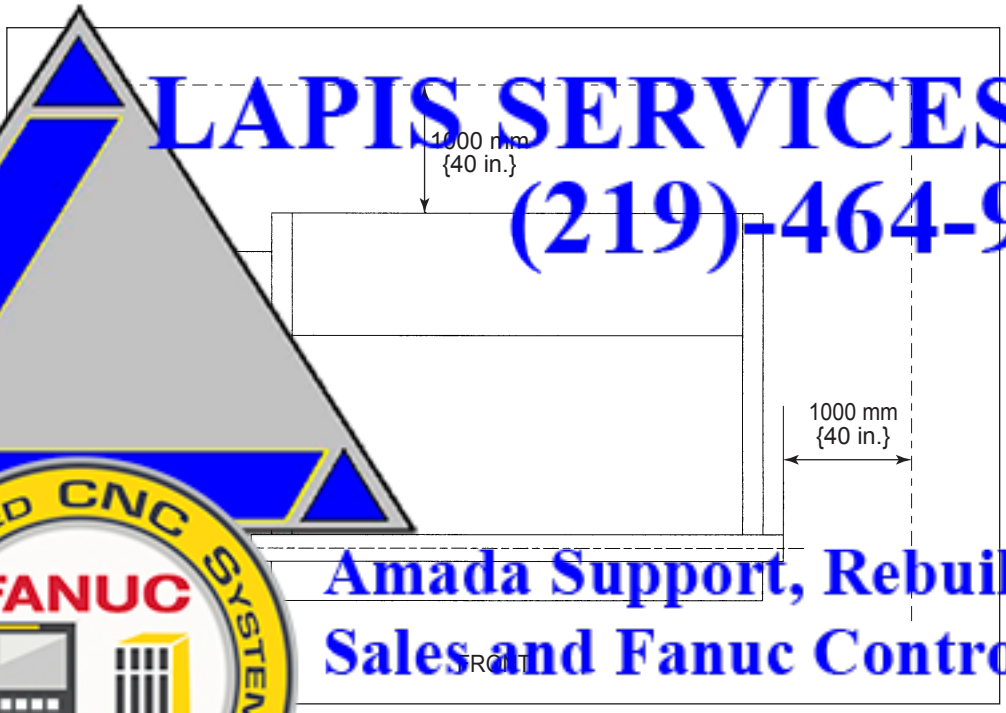

LAPIS SERVICES INC
(219)-464-9131
Amada Support, Rebuilds,
Sales and Fanuc Control Upgrade
AUTHORIZED CNC SYSTEM INTEGRATOR
FANUC

2-2. Lifting

WARNING

- **The machine requires special lifting devices. Never use steel pipes or apply wire rope slings directly to the frame of the machine. Doing so is not only dangerous, but also damages the machine.**
- **If it is necessary to lift the machine for layout change, for example, ask a qualified contractor to perform the work.**

For the mass of the machine, refer to “Machine mass” in the specifications on pages II-5 and II-6. This mass is that of a standard specification machine and increases when the machine is fitted with optional units.

When lifting the machine, pass special lifting devices through the frame gaps as shown below, apply wire rope slings to the lifting devices, and lift the machine with a crane.

LAPIS SERVICES INC
(219)-464-9131
AUTHORIZED CNC SYSTEM FANUC INTEGRATOR
Amada Support, Rebuilds,
Sales and Fanuc Control Upgrade

2-3. Foundation

To maintain its bending accuracy, install the machine on a flat concrete floor constructed strong enough to carry its mass. Before carrying the machine to the location, execute the foundation work by referring to the foundation drawing supplied by AMADA. If the ground is soft with a bearing capacity of 49 kN/m^2 {0.51 US tonf/ft^2} or less, reinforce the foundation with steel bars or the like.

2-4. Placing

Usually, fixing the machine with anchor bolts is not necessary.

Place base plates (150 mm {6 in.} square and 9 to 16 mm {0.4 to 0.6 in.} thick steel plates) on the foundation, and install the machine on the base plates.

2-5. Leveling

After installing the machine, be sure to level it. Unless it is properly leveled, it will not perform and last as originally designed. Leveling the machine calls for the use of spirit levels accurate to 0.05 mm/m {0.0006 in./ft} or less, a thickness gauge, and stretch bars (or die holders).

Levelness in left-right direction

Place a spirit level at the center of the ram.

LAPIS SERVICES INC
(219)-464-9131
Amada Support, Rebuilds,
Sales and Fanuc Control Upgrade

Levelness in front-back direction

Place a stretch bar (or die holder) on the two leveling pins inside each of the left and right frames of the machine.

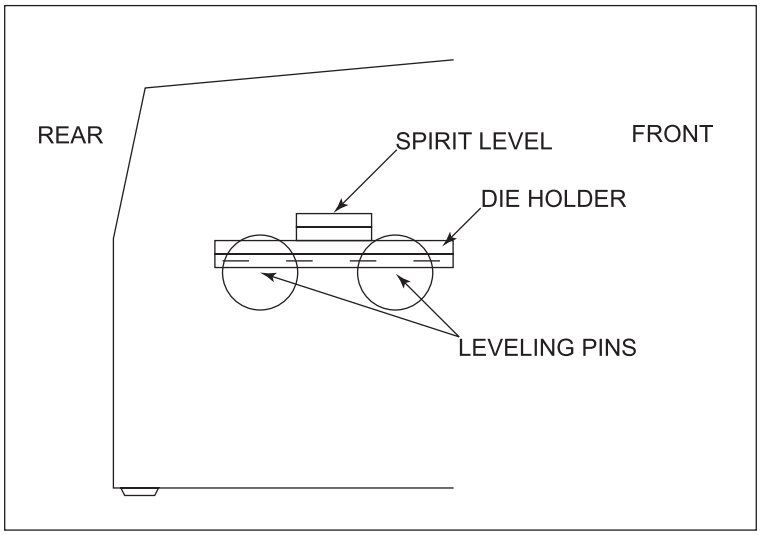

Insert a thickness gauge between the front or rear leveling pin and the stretch bar.

The thickness of the thickness gauge to be inserted is marked at the front left or right of the ram.

The position where to insert the thickness gauge depends on the position of the mark on the lower beam as shown below.

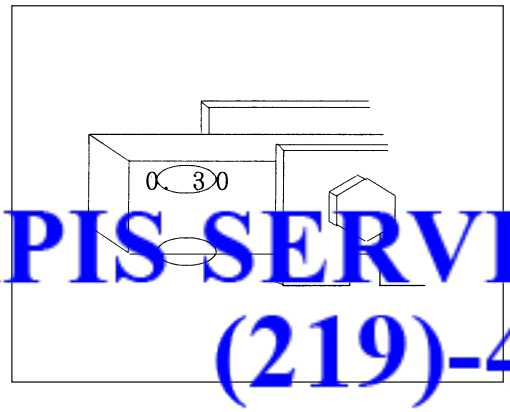

LAPIS SERVICES INC
(219)-464-9131

When the mark is placed at the upper front of the ram, insert the thickness gauge between the front leveling pin and the stretch bar.

When the mark is placed at the lower front of the ram, insert the thickness gauge between the rear leveling pin and the stretch bar.

Leveling machine

Place a spirit level on each stretch bar (or die holder).

Adjust the level of the machine to within 0.05 mm/m (0.0006 in./ft) in the front-back and left-right directions by turning the leveling bolts at the four corners of the machine.

Amada Support, Rebuilds,
Sales and Fanuc Control Upgrade

2-6. Supplying hydraulic oil

The hydraulic unit is located at the rear of the machine. Remove the top cover or covers of the hydraulic oil tank, and pour the recommended hydraulic oil into the hydraulic oil tank to the specified level of the oil gauge. The specified level is near the middle mark of the oil gauge when the ram is at the maximum opening limit. (Refer to “2. Maintaining hydraulic system” in Part VI.)

Model	Tank capacity
RG35S	26 L {6.9 US gal}
RG50, RG80	51 L {13.5 US gal}
RG100	65 L {17.2 US gal}

Recommended hydraulic oil: Amada Oil A-110
Esso Nuto H46
Mobil DTE 25
Shell Tellus Oil 46
(ISO VG46 equivalent)

The hydraulic oil Super Hyrando 56 of Nippon Oil Co., Ltd. is delivered with the machine.

2-7. Supplying electric power

WARNING

- **Have a qualified electrician perform all electric work to prevent accidents and damage.**
- **Before making the electrical connections, be sure to turn off the shop circuit breaker.**
- **Be sure to connect the grounding conductor for safety.**

LAPIS SERVICES INC
(219)-464-9131
Amada Support, Rebuilds,
Sales and Fanuc Control Upgrade

Connec source

nect the power source to the machine as described below.

n off the machine circuit breaker and the shop circuit breaker.

e three-phase power cable through the power inlet at the of the electrical enclosure, and connect it to the L1, L2 and y terminals of the terminal block.

nnect the grounding conductor to the ground terminal.
e power cable, check the voltage with a tester.

power cable	Four-conductor cable
ver source	200/230/380/400/460 VAC±10%, 3 phases, 50/60 Hz±1 Hz

Checking rotation direction of hydraulic pump motor

WARNING	● **To check the rotation direction of the hydraulic pump motor, do not get any part of your body or clothing too close to any rotating parts (like the coupling of the motor to the pump).** **If you have any part of your body or clothing caught in a rotating part, you may get hurt.**

Check the rotation direction of the hydraulic pump motor as described below.

1. Remove the cover of the rotating shaft of the hydraulic pump motor.
2. Turn on the shop circuit breaker and the machine circuit breaker.
3. Turn the POWER ON/OFF keyswitch to ON.
4. Push back the bar pedal lock lever, if provided.
5. Press the HYD. ON button. The button illuminates, and the hydraulic pump motor starts.
6. Check the rotation direction of the hydraulic pump motor, and immediately press the HYD. OFF button. The hydraulic pump motor stops, and the HYD. ON button extinguishes.

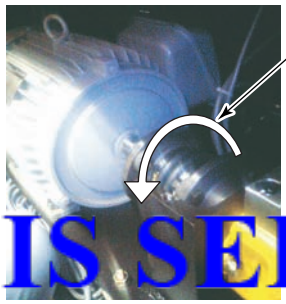

[RG50, RG80, RG100]

[RG35S]

When the hydraulic pump motor runs in the correct direction, its wiring is properly connected. Replace the cover of the rotating shaft, and complete the connecting procedure.

When the hydraulic pump motor runs in the reverse direction, turn the POWER ON/OFF keyswitch to OFF, turn off the machine circuit breaker and the shop circuit breaker, and interchange two of the three power conductors L1, L2 and L3 connected to the primary terminals in the electrical enclosure. This makes correct wiring connections. Replace the cover of the rotating shaft, and complete the connecting procedure.

LAPIS SERVICES INC
(219)-464-9131
AUTHORIZED CNC SYSTEM INTEGRATOR
FANUC
Amada Support, Rebuilds,
Sales and Fanuc Control Upgrade

NOTICE

- Supply electric power to the machine from a source different from that of a welder or any other equipment that produces electrical noise. Use a welder, electric drill, sander, or grinder at least 10 m {33 ft} away from the machine.
- The type of primary power cable varies with machine model. Maintain the supply voltage variations to within ±10%.
- Use a grounding conductor of size not smaller than that of the L1, L2, and L3 power conductors.

LAPIS SERVICES INC
(219)-464-9131
Amada Support, Rebuilds,
Sales and Fanuc Control Upgrade

Part IV

Controls

1. Controls on electrical enclosure *IV-2*
2. Controls on upper beam *IV-3*
3. Hydraulic equipment controls *IV-4*
4. Other controls *IV-6*

LAPIS SERVICES INC
(219)-464-9131

AUTHORIZED CNC SYSTEM INTEGRATOR
FANUC

Amada Support, Rebuilds,
Sales and Fanuc Control Upgrade

1. CONTROLS ON ELECTRICAL ENCLOSURE

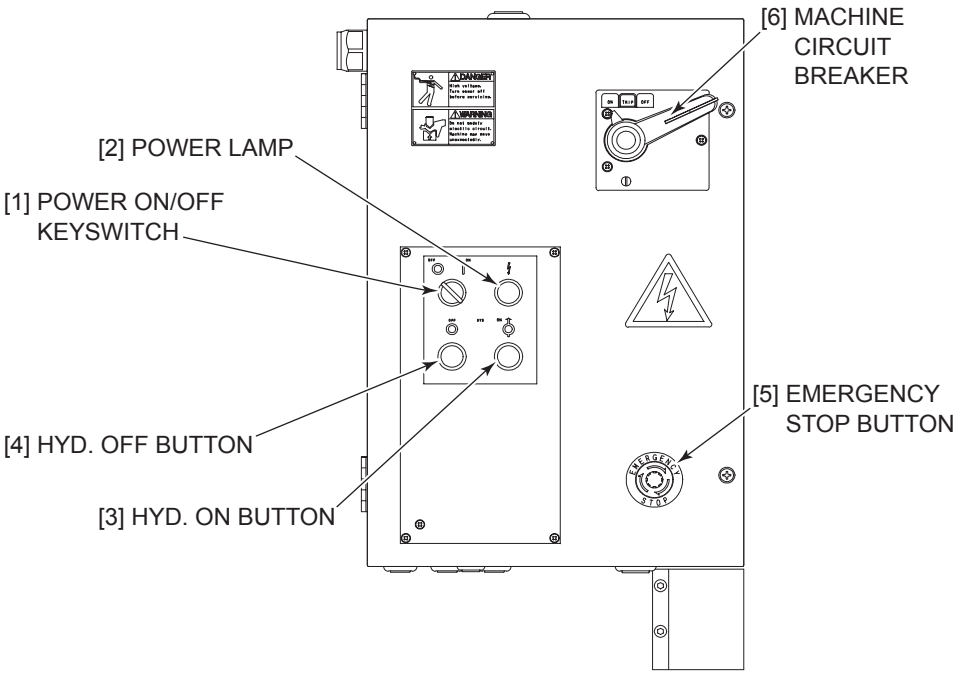

[1] POWER ON/OFF keyswitch

Used to turn on and off the power of the machine.

[2] POWER lamp

Illuminates to indicate that the machine circuit breaker is turned to ON to supply electric power to the machine.

[3] HYD. ON button

Pressed to illuminate itself and start the hydraulic pump motor.

[4] HYD. OFF button

Used to extinguish the HYD. ON button and stop the hydraulic pump.

[5] EMERGENCY STOP button

Pressed in emergency to stop all motions of the machine. When pressed, the EMERGENCY lamp on the upper beam is lit.

[6] MACHINE CIRCUIT breaker

Turn on and off the power to the electrical enclosure.

LAPIS SERVICES INC
(219) 464-9131
Amada Support, Rebuilds,
Sales and Fanuc Control Upgrade
AUTHORIZED CNC SYSTEM INTEGRATOR
FANUC

2. CONTROLS ON UPPER BEAM

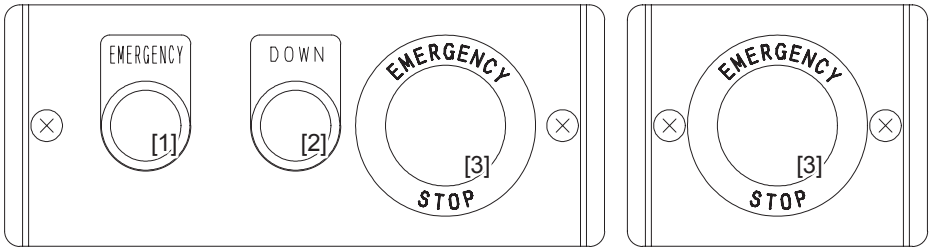

(Not installed on RG35S)

[1] EMERGENCY lamp

Illuminates to indicate that the machine is under the emergency stop condition.

[2] DOWN button

Pressed to force down the ram.

[3] EMERGENCY STOP button or buttons

Pressed in an emergency to stop all motions of the machine. When pressed and locked, the EMERGENCY lamp is illuminated.

NOTE

- The RG35S have the one EMERGENCY STOP button on the upper beam. The RG50, RG80, and RG100 have the two EMERGENCY STOP buttons.

LAPIS SERVICES INC
(219)-464-9131
AUTHORIZED CNC SYSTEM INTEGRATOR
FANUC
Amada Support, Rebuilds,
Sales and Fanuc Control Upgrade

3. HYDRAULIC EQUIPMENT CONTROLS

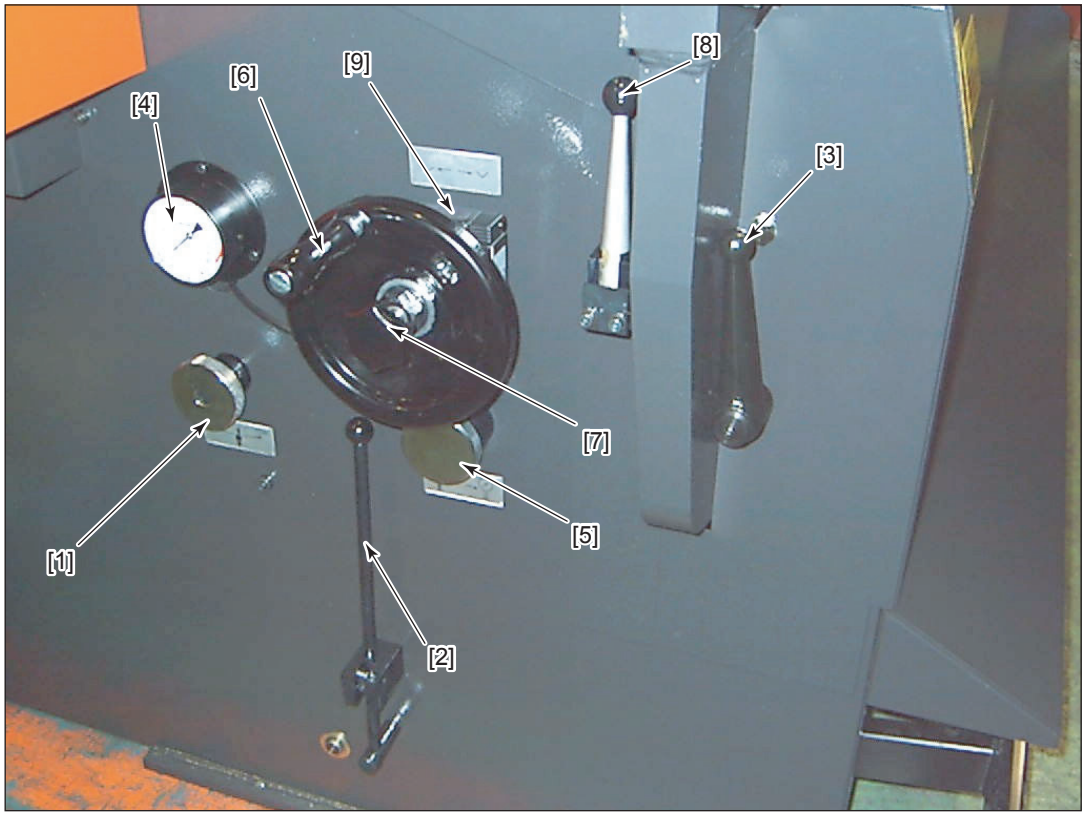

[1] Pressure adjusting knob (Regulator)

Used to adjust the pressure applied between the punches and dies. Turned counterclockwise (–) to decrease the pressure and clockwise (+) to increase the pressure. To obtain the maximum press capacity, usually keep the knob turned fully clockwise (+).

LAPIS SERVICES INC
(219)-464-9131

[2] Bar pedal lock lever (Not installed on HG35S)

Used to lock the bar pedal in the fully pressed state when the ram is adjusted to the multiple closing limit. Lock and unlock the bar pedal while pressed.

DANGER	● **When the bar pedal lock lever is used, the bar pedal is fixed in the fully pressed state, and the applied pressure is maintained. The ram may follow the multiple closing limit setting made with its handwheel and may produce an excessive pressure.**

AUTHORIZED CNC SYSTEM FANUC INTEGRATOR
Amada Support, Rebuilds,
Sales and Fanuc Control Upgrade

[3] Multiple opening limit setting lever

Used to set the multiple opening limit (stop position) of the ram. Open the ram to the position where you want to stop the ram, and turn down the lever to set the stop position. Turn up the lever to clear the stop position and open the ram to the maximum opening limit.

[4] Pressure gauge

Indicates the pressure applied between the punches and dies when the cut-off valve knob is turned fully counterclockwise.

[5] Cut-off valve knob

Used to stop the flow of hydraulic oil to the pressure gauge so that the pressure gauge does not indicate the pressure. Turned fully clockwise when there is no need to check the pressure.

[6] Multiple closing limit setting handwheel

Used to set the multiple closing limit of the ram. Turned clockwise to raise the multiple closing limit and counterclockwise to lower the multiple closing limit when the handwheel lock knob is turned fully counterclockwise.

NOTICE

- Do not turn the multiple closing limit setting handwheel counterclockwise with the bar pedal pressed and held. Doing so may break the multiple closing limit setting mechanism and render the machine unusable.

[7] Handwheel lock knob

Used to lock the multiple closing limit setting handwheel after setting the multiple closing limit of the ram with the handwheel. Turned fully clockwise to lock the handwheel.

NOTICE

- When the handwheel lock knob is overloosened to unlock the multiple closing limit setting handwheel, the handwheel may not be locked again. To loosen the knob, turn it once to twice.

LAPIS SERVICES INC
(219)-464-9131

[8] Rising speed change position setting lever

Used to change the rising speed of the ram from the approach speed to the bending speed (low speed).

[9] Digital multiple closing limit display (Digicollar)

Installed behind the multiple closing limit setting handwheel and displays the current position of the ram set with the handwheel. Press the reset button alongside the display to reset the display to “0”.

AUTHORIZED CNC SYSTEM FANUC INTEGRATOR
Amada Support, Rebuilds,
Sales and Fanuc Control Upgrade

4. OTHER CONTROLS

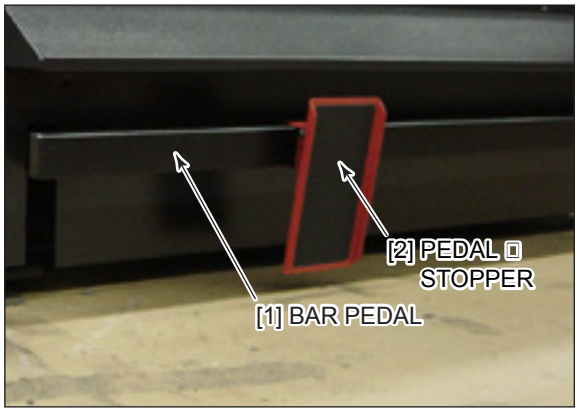

[1] Bar pedal

Pressed to adjust the ram approach speed or stop the ram mid-stroke. The ram closes to the multiple closing limit when the bar pedal is fully pressed and opens to the multiple opening limit or maximum opening limit when the bar pedal is released.

[2] Pedal stopper

Pressed to allow the ram to be operated only by a single operator. The bar pedal can be pressed only when a foot is placed on the pedal stopper to disable the pedal stopper. When the foot is released from the pedal stopper, the pedal stopper opens under its own mass and does not allow the bar pedal to be pressed. The pedal stopper can be moved to any desired working position.

LAPIS SERVICES INC
(219)-464-9131
AUTHORIZED CNC SYSTEM INTEGRATOR
FANUC
Amada Support, Rebuilds,
Sales and Fanuc Control Upgrade

Part V

Operation

1. Inspection before start of day's work *V-3*
2. Preparing for operation *V-3*
3. Turning on power *V-5*
4. Removing tools *V-6*
   4-1. Preparing for removing tools *V-6*
   4-2. Removing punches *V-8*
   4-3. Removing dies *V-9*
5. Installing tools *V-11*
   5-1. Preparing for installing tools *V-11*
   5-2. Installing dies *V-12*
   5-3. Installing punches *V-14*
   Preparing for special bending *V-16*
   . Installing and removing punch holders *V-16*
   1-1. Removing punch holders *V-16*
   2. Installing punch holders *V-17*
   alling punches rearside front *V-18*
   ing wide dies *V-19*
   ..... *V-20*
   punch holders *V-20*
   uch punch holders (option) *V-23*
   and removing punches from front *V-25*
   Installing and removing punches by sliding them
   long groove of rear clamping plates *V-28*

(Continued on next page.)

LAPIS SERVICES INC
(219)-464-9131
Amada Support, Rebuilds,
Sales and Fanuc Control Upgrade
AUTHORIZED CNC SYSTEM INTEGRATOR
FANUC

7-2-3. Installing and removing rear clamping plates *V-29*
8. Aligning tools *V-32*
8-1. RG35S *V-32*
8-2. RG50, RG80, and RG100 ..... *V-34*
9. Setting tool origin *V-37*
10. Bending operation *V-38*
10-1. Setting rising speed change position *V-38*
10-2. Setting multiple opening limit *V-39*
10-3. Bending worksheet *V-40*
10-3-1. Temporarily setting multiple closing limit *V-40*
10-3-2. Setting worksheet *V-41*
10-3-3. Setting bend angle *V-42*
11. Turning off power *V-44*
12. Troubleshooting *V-46*
13. Clearing emergency stop condition *V-48*

LAPIS SERVICES INC
(219)-464-9131
Amada Support, Rebuilds,
Sales and Fanuc Control Upgrade

1. INSPECTION BEFORE START OF DAY'S WORK

Inspection before the start of the day's work is very important for the safe and trouble-free operation of the machine. Before starting its operation, inspect the machine as described in "1. Inspection before start of day's work" in Part VI.

2. PREPARING FOR OPERATION

Prepare the machine for operation as described below.

1 Turn up the multiple opening limit setting lever to open the ram to the maximum opening limit.

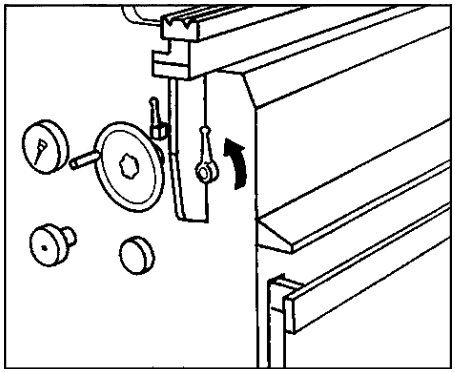

2 Pull forward the rising speed change position setting lever to prevent the ram from unexpectedly closing.

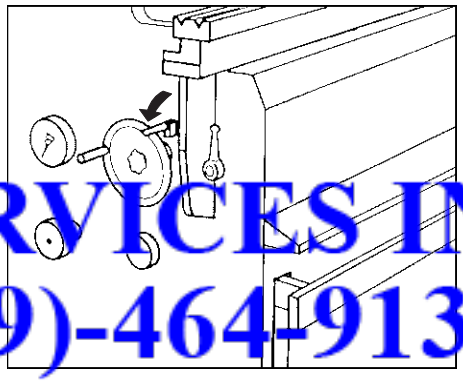

3 Loosen the handwheel lock knob, and turn the multiple closing limit setting handwheel fully counterclockwise.

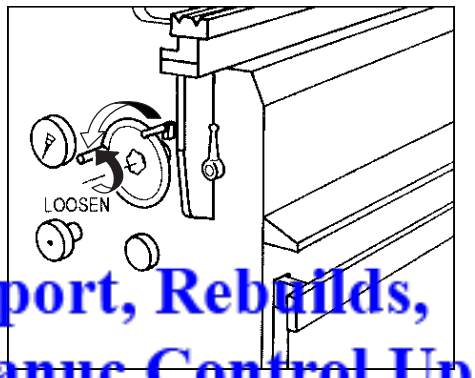

LAPIS SERVICES INC
(219)-464-9131
AUTHORIZED CNC SYSTEM INTEGRATOR
FANUC
Amada Support, Rebuilds,
Sales and Fanuc Control Upgrade

4 Turn the cut-off valve knob fully counterclockwise to enable the pressure gauge.

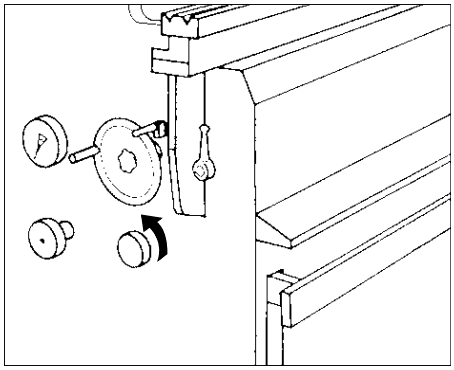

5 Turn the pressure adjusting knob fully clockwise (+).

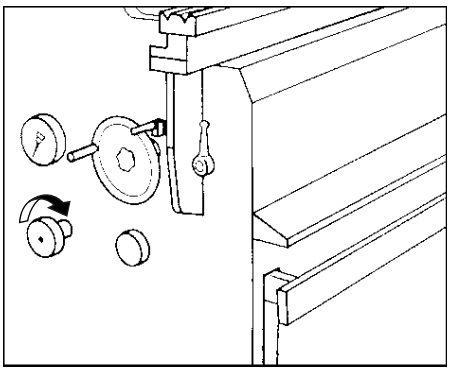

LAPIS SERVICES INC
(219)-464-9131
Amada Support, Rebuilds,
Sales and Fanuc Control Upgrade

3. TURNING ON POWER

Start the machine as described below.

1 Turn on the shop circuit breaker.

2 Turn the machine circuit breaker to ON.

The POWER lamp illuminates.

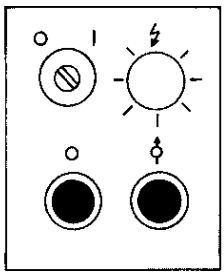

3 Insert the key in the POWER ON/OFF keyswitch, and turn the keyswitch to ON.

4 Push back the bar pedal lock lever, except RG35S.

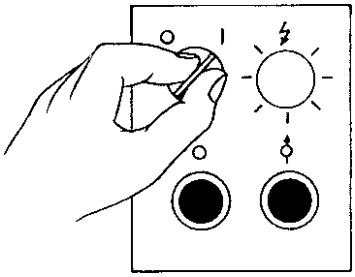

5 Press the HYD. ON button.

The button illuminates, and the hydraulic pump motor starts.

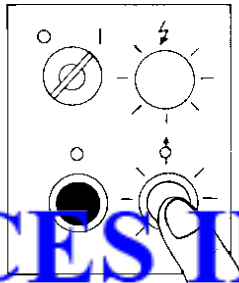

LAPIS SERVICES INC
(219)-464-9131
AUTHORIZED CNC SYSTEM INTEGRATOR
FANUC
Amada Support, Rebuilds,
Sales and Fanuc Control Upgrade

4. REMOVING TOOLS

DANGER

- **Never put your hand or hands between the punches and dies.**
- **When changing the tools, strictly observe the following cautions:**
  - **① Before removing the dies, turn the POWER ON/OFF keyswitch to OFF, remove the key from the keyswitch, and keep it by yourself.**
  - **② Before removing the punches, turn the multiple closing limit setting handwheel to close the ram to the desired position, turn the POWER ON/OFF keyswitch to OFF, remove the key from the keyswitch, and keep it by yourself. Never put your hand or hands between the punch and die to support the punch.**
  - **③ When you remove the tools with an assistant operator or operators, be sure to coordinate your work with them.**
- **Be sure to remove the punches first and then the dies.**

4-1. Preparing for removing tools

Before removing the tools, set the multiple opening limit of the ram as described below.

NOTE

The maximum opening limit refers to the bottom dead center of the ram, and the multiple opening limit refers to the stop position of the ram set with the multiple opening limit setting lever.

eck the punch-die
bination dimension H
n right.

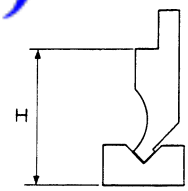

ndwheel lock knob to unlock the multiple closing limit
eel.

n the multiple closing limit setting handwheel fully
terclockwise.

he pedal stopper, and fully press the bar pedal.
m closes to the multiple closing limit and stops.

LAPIS SERVICES INC
(219)-464-9131
Amada Support, Rebuilds,
Sales and Fanuc Control Upgrade
AUTHORIZED CNC SYSTEM INTEGRATOR FANUC

5 With the bar pedal fully pressed, turn the multiple closing limit setting handwheel clockwise to set the height between the punch holders and die holders to the dimension H plus 2 to 3 mm {0.08 to 0.12 in.}.

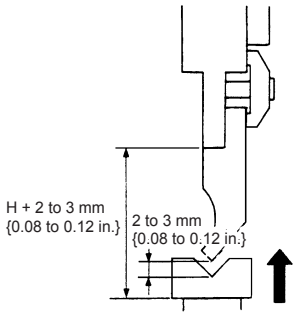

NOTICE

- Do not turn the multiple closing limit setting handwheel counterclockwise with the bar pedal pressed and held. Doing so may break the multiple closing limit setting mechanism. Even when the handwheel is turned counterclockwise, the ram does not open.
- To adjust the multiple closing limit of the ram to a lower position, release the bar pedal to open the ram, turn the multiple closing limit setting handwheel counterclockwise, and press the bar pedal again.

6 Release the bar pedal, and turn up the multiple closing limit setting lever to clear the multiple opening limit of the ram.

The ram opens to the maximum opening limit.

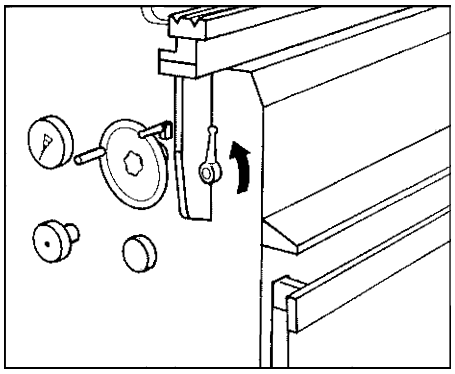

7 Clear the pedal stopper, press the bar pedal again to close the ram to the position you want to set as the multiple opening limit, and hold the bar pedal in that state.

The ram stops in that position.

8 Turn down the multiple opening limit setting lever to set the multiple opening limit of the ram.

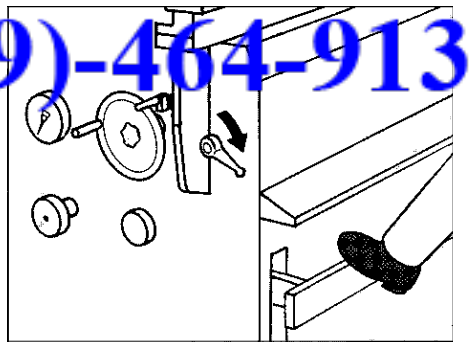

NOTE

- Positively turn down the multiple opening limit setting lever so that the ram does not open.

9 Release the bar pedal.

The ram remains at the multiple opening limit.

LAPIS SERVICES INC
(219)-464-9131
Amada Support, Rebuilds,
Sales and Fanuc Control Upgrade

10 To perform the subsequent tasks safely, press the HYD. OFF button, turn the POWER ON/OFF keyswitch to OFF, and remove the key from the keyswitch.

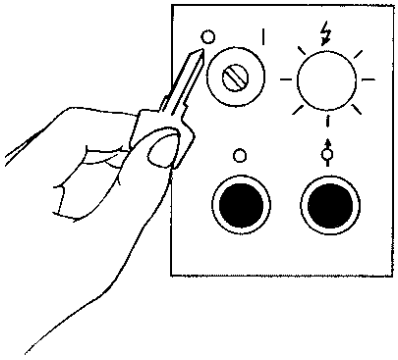

4-2. Removing punches

WARNING

- **When removing the punch in step 1, do not support it from below with your hand as shown below. Otherwise you may get your hand or fingers pinched.**

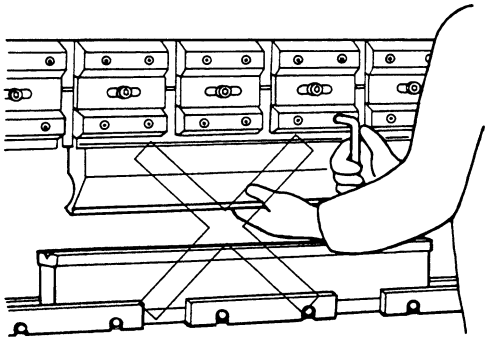

Remove the punches from the punch holders as described below.

Loosen the fixing bolts of the punch clamping plate or plates.

The punch drops onto the groove of the die.

Pull the punch out to remove it.

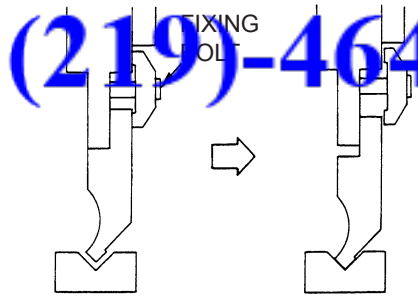

LAPIS SERVICES INC
(219)-464-9131
Amada Support, Rebuilds, Sales and Fanuc Control Upgrade
AUTHORIZED CNC SYSTEM FANUC INTEGRATOR

When optional one-touch punch holders (refer to page V-23) are available:

1. Turn the punch holder lever or levers counterclockwise as shown right.
2. Slide the punch sideways to remove it.

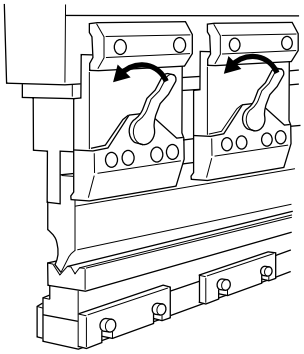

4-3. Removing dies

After removing the punches, remove the dies from the ram as described below.

Removing 2V-dies

Loosen the die fixing bolts, and remove the die.

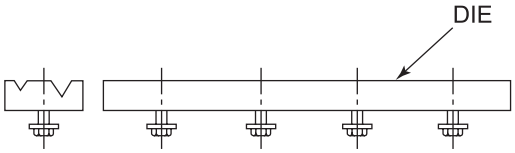

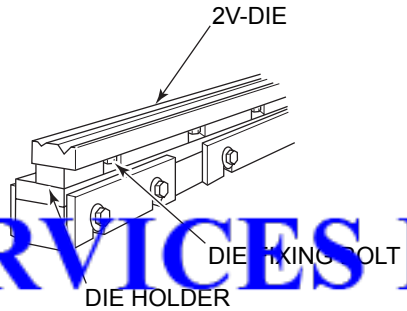

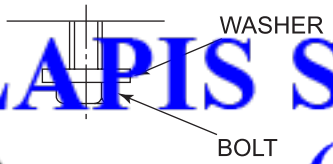

LAPIS SERVICES INC
(219)-464-9131

dies for forming sashes

Remove the 1V-dies for forming sashes as described for the 2V-dies on the above.

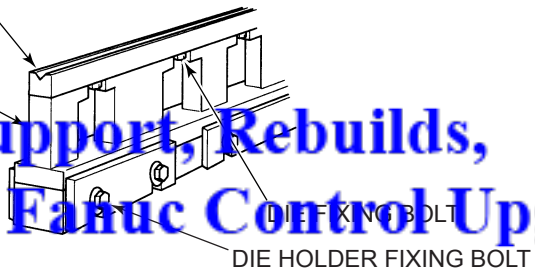

Amada Support, Rebuilds,
Sales and Fanuc Control Upgrade

Removing 1V-dies

Loosen the front die-block fixing bolts, and remove the die together with the die block.

NOTICE

- The rear clamping plates of the ram and die blocks establish the reference surface for aligning the punches and dies. Never loosen them.

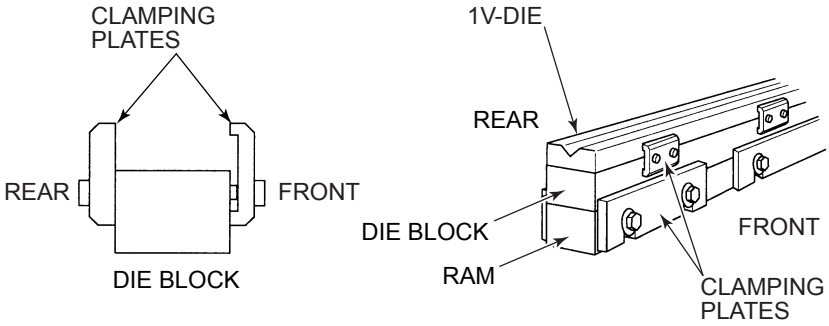

LAPIS SERVICES INC
(219)-464-9131
Amada Support, Rebuilds,
Sales and Fanuc Control Upgrade

5. INSTALLING TOOLS

WARNING

- **Never put your hand or hands between the punches and dies.**
- **When changing the tools, strictly observe the following cautions:**
  - **① Before installing the dies, turn the POWER ON/OFF keyswitch to OFF, remove the key from the keyswitch, and keep it by yourself.**
  - **② Before installing the punches, turn the multiple closing limit setting handwheel to close the ram to the desired position, turn the POWER ON/OFF keyswitch to OFF, remove the key from the keyswitch, and keep it by yourself. Never put your hand or hands between the punch and die to support the punch.**
  - **③ When you install the tools with an assistant operator or operators, be sure to coordinate your work with them.**
- **Be sure to install the dies first and then the punches.**

5-1. Preparing for installing tools

Before installing the tools, wipe off the upper beam and ram tool installation surfaces and tools, refer to “4-1. Preparing for removing tools” in this Part, and set the multiple opening limit of the ram.

LAPIS SERVICES INC
(219)-464-9131
AUTHORIZED CNC SYSTEM FANUC INTEGRATOR
Amada Support, Rebuilds,
Sales and Fanuc Control Upgrade

5-2. Installing dies

Install the dies on the ram as described below.

Installing 2V-dies

NOTICE

- Install 2V-dies so that the V-groove to be used faces the rear of the machine by considering safety in the event of die breakage. When the die holders are installed with the step facing the rear as shown right, the V-groove to be used comes to the rear.
- When using two or more die holders, install them with a clearance of about 5 mm {0.2 in.} between them.

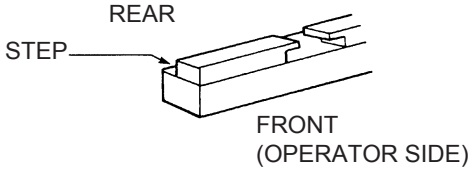

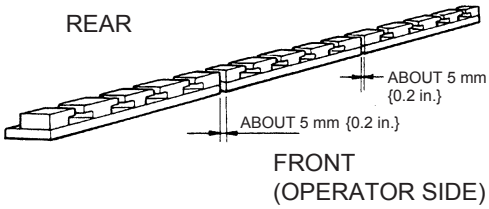

NOTE

- When using two or more dies, install them so as to create no gap between them.

1 Place the die holder for the 2V-die on the top of the ram.

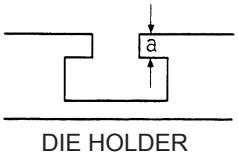

2 Set the die fixing bolts as shown right.

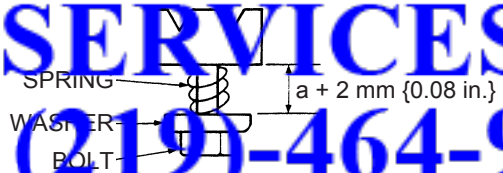

de the 2V-die from
ront of the
ne onto the die
with the V-
be used
ear.
holder
der
ng bolts.

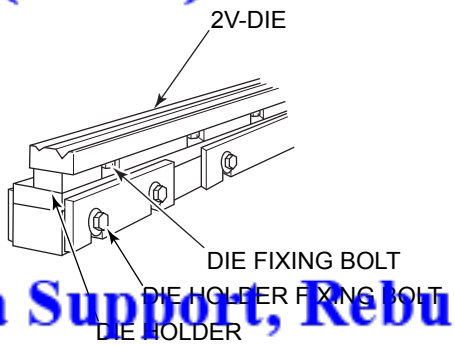

LAPIS SERVICES INC
(219)-464-9131
Amada Support, Rebuilds,
Sales and Fanuc Control Upgrade

Installing 1V-dies for forming sashes

Install the 1V-dies for forming sashes as described for the 2V-dies on the previous page.

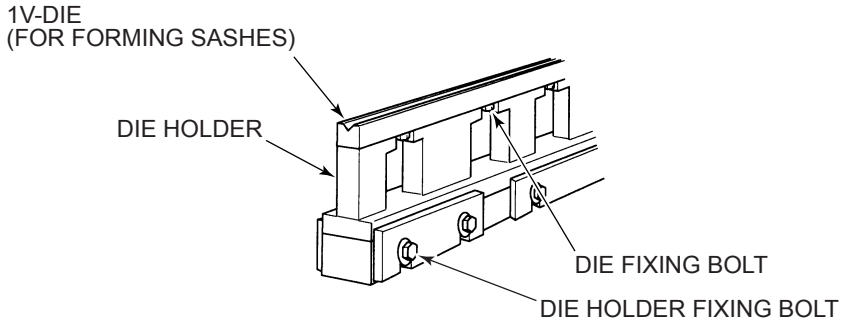

Installing 1V-dies

NOTICE

- The rear clamping plates of the ram and die blocks establish the reference surface for aligning the punches and dies. Never loosen them.

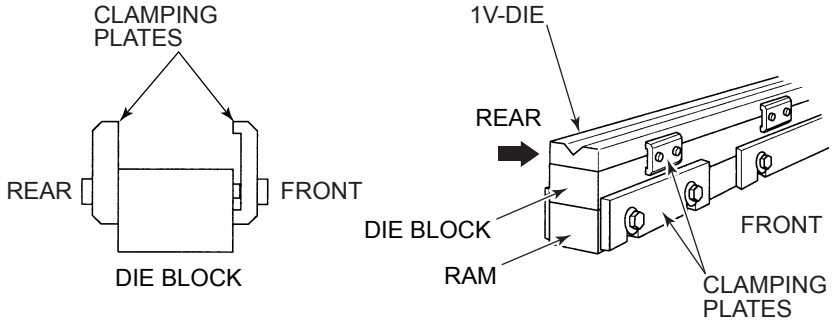

NOTE

- Depending on the type of 1V-die, the tool height and ram stroke length may not be large enough for the punch and die to properly engage. In such a case, use the optional die block on the ram. Install the die block by paying attention to its orientation as shown below.

1 Place the 1V-die together with the die block on the top of the ram.

2 Tighten the front die-block fixing bolts.

LAPIS SERVICES INC
(219)-464-9131
AUTHORIZED CNC SYSTEM INTEGRATOR
FANUC
Amada Support, Rebuilds,
Sales and Fanuc Control Upgrade

5-3. Installing punches

WARNING

- **When installing a punch, do not support it from below with your hand as shown below. Otherwise you may get your hand or fingers pinched.**

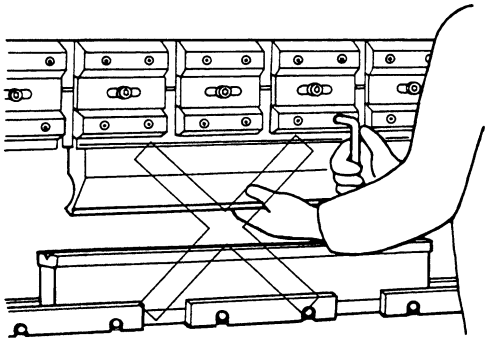

After installing the dies, install the punches to the punch holders as described below.

NOTE

- When installing sectionalized punches and dies, stagger them by about 5 mm {0.2 in.} as shown right to prevent the worksheet from being scratched.

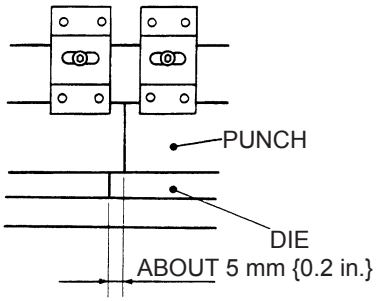

1. Slide the punch into the V-groove of the die as shown right.
2. Determine the installation position of the punch by sliding it left and right, and temporarily tighten the bolts of the clamping plate

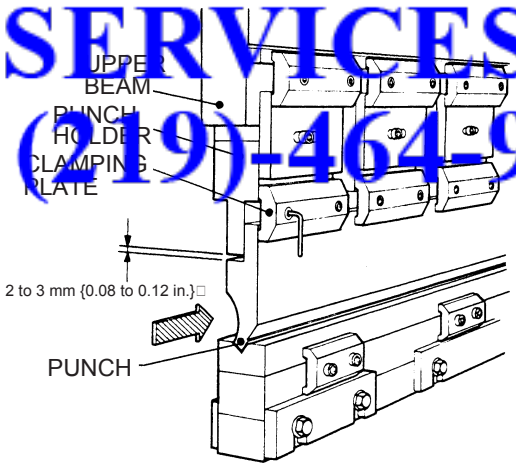

LAPIS SERVICES INC
(219)-464-9131
Amada Support, Rebuilds,
Sales and Fanuc Control Upgrade
AUTHORIZED CNC SYSTEM
FANUC
INTEGRATOR

When optional one-touch punch holders (refer to page V-23) are available:

1. Insert the fall prevention tongue of the punch into the fall prevention groove of the clamping plate or plates as shown lower left, and slide the punch into position.
2. Tighten the punch holder lever or levers clockwise to prevent the punch from as shown lower right.

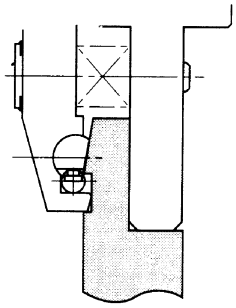

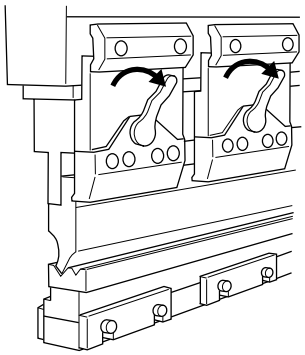

LAPIS SERVICES INC
(219)-464-9131
Amada Support, Rebuilds,
Sales and Fanuc Control Upgrade

6. PREPARING FOR SPECIAL BENDING

6-1. Installing and removing punch holders

When special-shaped punches are used or when a worksheet comes into contact with punch holders during bending, the punch holders may be removed from the upper beam for bending the worksheet. Install and remove the punch holders as described below.

6-1-1. REMOVING PUNCH HOLDERS

1 Remove the punches from the punch holders. (Refer to “4. Removing tools” in this Part.)

2 Turn the POWER ON/OFF keyswitch to OFF, and remove the key from the keyswitch.

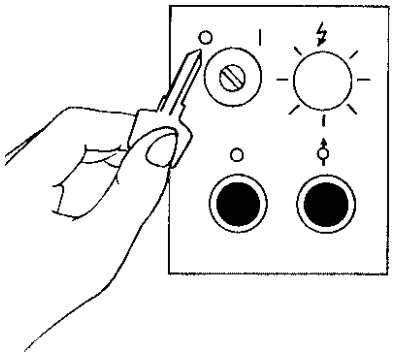

3 Turn up the multiple opening limit setting lever to clear the multiple opening limit of the ram.

The ram opens to the ma imu n pe ing limi

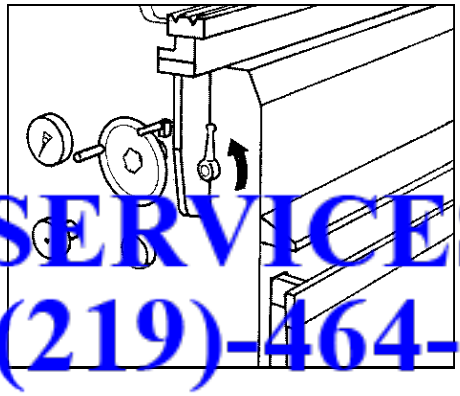

sen the clamping of each punch while ng the punch h the other emove the

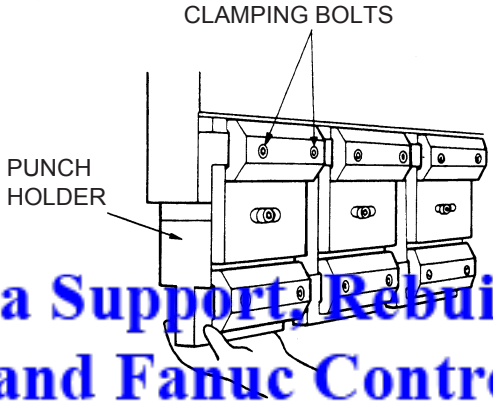

LAPIS SERVICES INC
(219)-464-9131
Amada Support, Rebuilds,
Sales and Fanuc Control Upgrade

6-1-2. INSTALLING PUNCH HOLDERS

NOTE

- The numbers that specify their installation position of the punch holders are marked on the punch holders and upper beam. Install each punch holder in the position that matches its marked number.

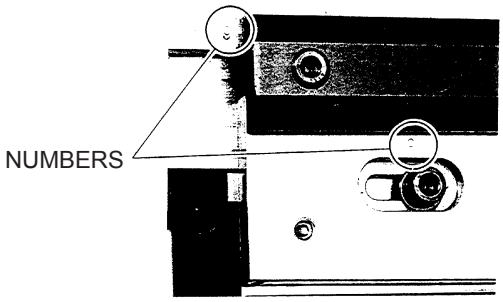

1 Turn the POWER ON/OFF keyswitch to OFF, and remove the key from the keyswitch.

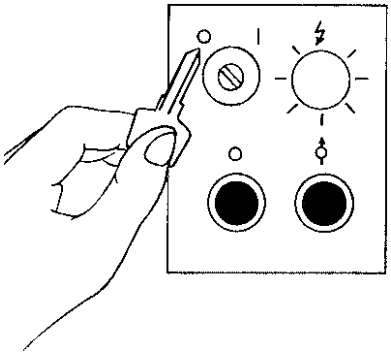

2 While pushing each punch holder against the upper beam with one hand, finger-tighten its clamping bolts with the other hand.

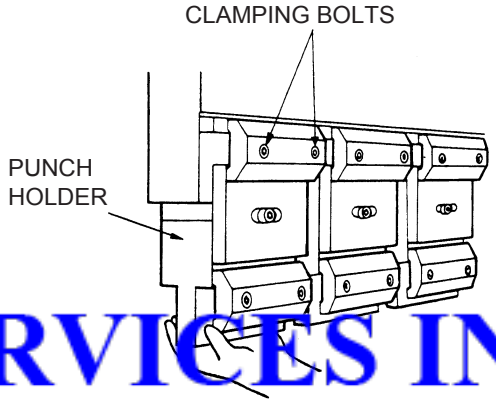

LAPIS SERVICES INC
(219)-464-9131

3 Install the punches and dies along the entire length of the upper beam and ram, respectively. (Refer to “5. Installing tools” in this Part.)

4 Align the punches and dies. (Refer to “8. Aligning tools” in this Part.)

AUTHORIZED CNC SYSTEM INTEGRATOR FANUC
Amada Support, Rebuilds,
Sales and Fanuc Control Upgrade

5 Place a worksheet along the entire length of the dies, clear the pedal stopper, and press the bar pedal to apply a pressure lower than the allowable tonnage of the tools and bring the punch holders into tight contact with the upper beam.

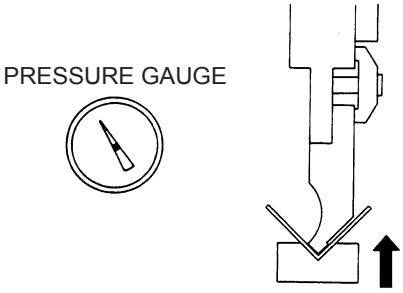

6 With the upper beam and punch holders in tight contact, retighten the clamping bolts of the punch holders.

6-2. Installing punches rearside front

WARNING

- **If you reach between the upper beam and ram to install the clamping plates at the rear of the punch holders, you may get your hands pinched. Never do so.**
- **When you install the clamping plates at the rear of the punch holders, turn off the power of the machine and optional backgauge, and go to the rear of the machine.**

Depending on the bend shape of parts, the punches may have to be installed rearside front as shown right. In such a case, install the punches as described below.

1 Turn the POWER ON/OFF keyswitch to OFF, and remove the key from the keyswitch.

LAPIS SERVICES INC
(219)-464-9131
Amada Support, Rebuilds,
Sales and Fanuc Control Upgrade

2 Remove the fixing bolts of the clamping plate of each punch holder, and remove the clamping plate.

3 Install the clamping plates at the rear of the punch holders, and fasten them with the fixing bolts.

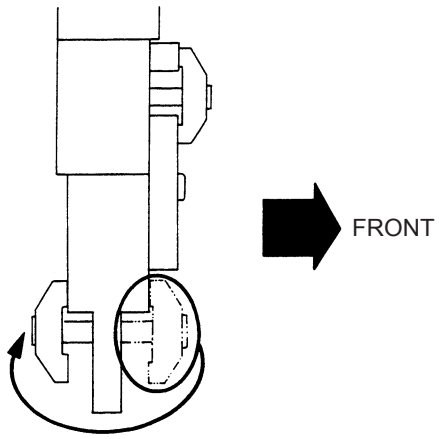

4 Install the punches. (Refer to “5. Installing tools” in this Part.)

6-3. Installing wide dies

With the machine model RG100 having bar attached to the clamping plate at the top of the ram, removing the bar allows 90 mm {3.5 in.} wide dies to be installed.

LAPIS SERVICES INC
(219)-464-9131
AUTHORIZED CNC SYSTEM INTEGRATOR
FANUC
Amada Support, Rebuilds,
Sales and Fanuc Control Upgrade

7. OTHER USES

7-1. Adjusting punch holders

If the worksheet is not bent to a uniform angle along the entire bend length, adjust the punch holders as described below.

Before adjusting the punch holder, record the current value of the scale marked on the wedge. This value serves as a guide when returning the punch holder to the original state.

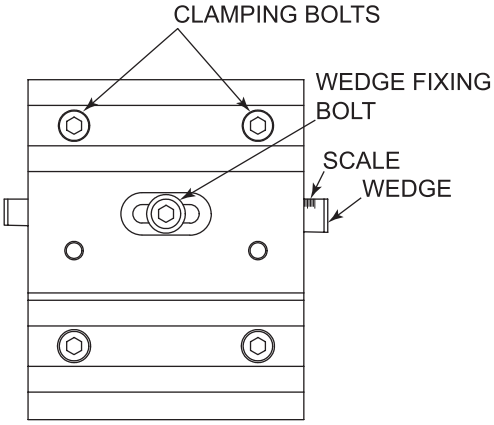

1 Loosen the wedge fixing bolt by about a half turn with an Allen wrench.

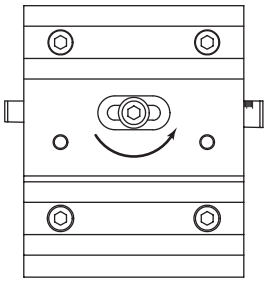

LOOSEN ABOUT HALF TURN

2 Loosen either of the left and right clamping bolts by about a half turn with an Allen wrench, and lightly tighten it again.

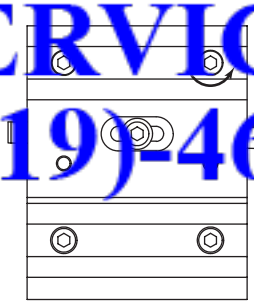

LOOSEN ABOUT HALF TURN

N

- **If both of the two clamping bolts are loosened, the punch holder falls. Be sure to loosen only either of them.**

LAPIS SERVICES INC
(219)-464-9131
Amada Support, Rebuilds,
Sales and Fanuc Control Upgrade
AUTHORIZED CNC SYSTEM
FANUC
INTEGRATOR

3 Apply the accessory brass bar to either of the left and right sides of the wedge, and strike it with a hammer.

NOTE

- To bend the worksheet to an acute angle, strike the brass bar from right to left facing the front of the machine.
- To bend the worksheet to an obtuse angle, strike the brass bar from left to right facing the front of the machine.

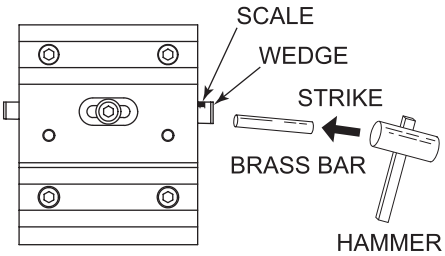

BENDING TO ACUTE ANGLE

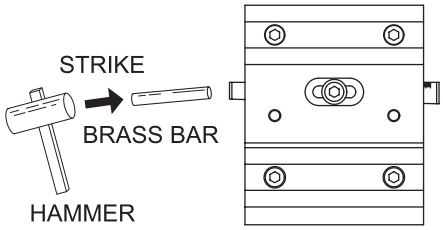

BENDING TO OBTUSE ANGLE

Guide for adjusting punch holders:

Consider bending a 1.6 mm {0.06 in.} thick worksheet of mild steel to an angle of about 90° with a die V-groove opening width of 10 mm {0.4 in.}. In this example, moving the wedge by one graduation of the scale changes the bend angle by 20 to 30'.

NOTICE

- When striking the wedge with a hammer, be sure to use the accessory brass bar. Never strike the wedge directly with the hammer.

4 After completing the adjustment, securely tighten the wedge fixing bolt.

5 While pressing and holding the bar pedal to apply pressure to the punch and die, securely tighten the clamping bolts.

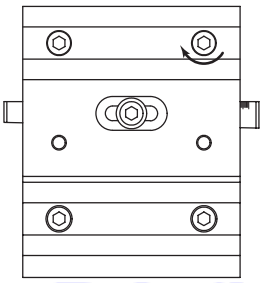

LAPIS SERVICES INC
(219)-464-9131
Amada Support, Rebuilds,
Sales and Fanuc Control Upgrade

CAUTION

- **The pressure to apply here should be about one-third of the allowable tonnage of the tools.**

6 Actually bend the worksheet to check that the bend angle is uniform.

7 If the bend angle is not uniform, repeat the procedure from the beginning.

LAPIS SERVICES INC
(219)-464-9131
Amada Support, Rebuilds,
Sales and Fanuc Control Upgrade

7-2. Using one-touch punch holders (option)

Names of parts

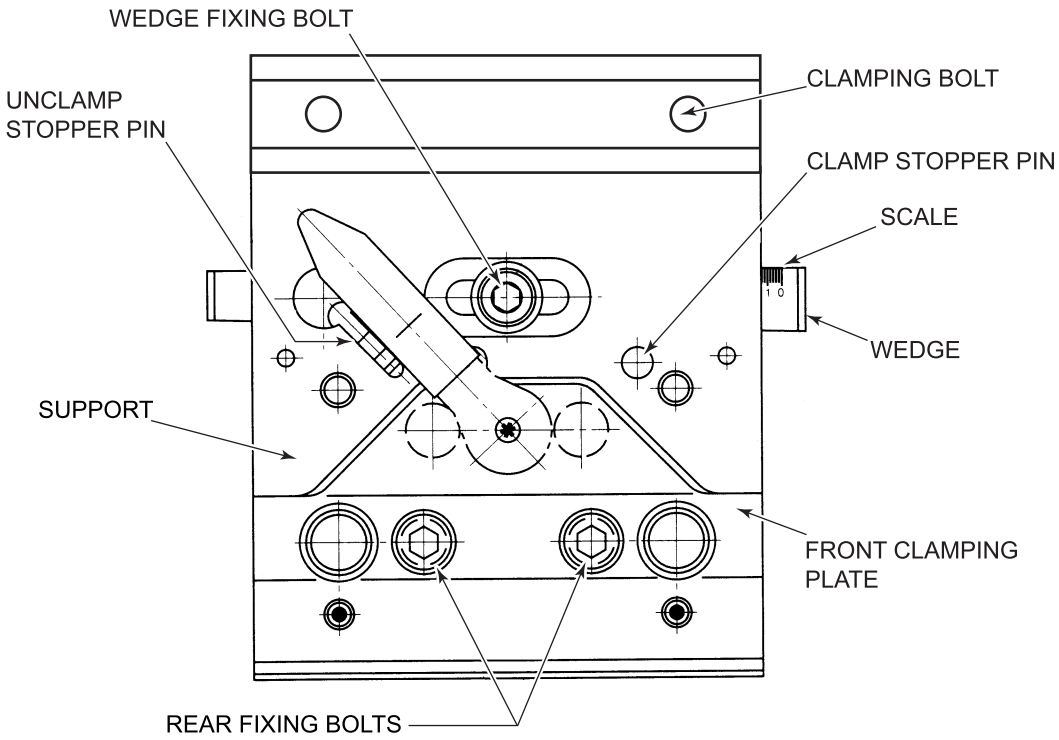

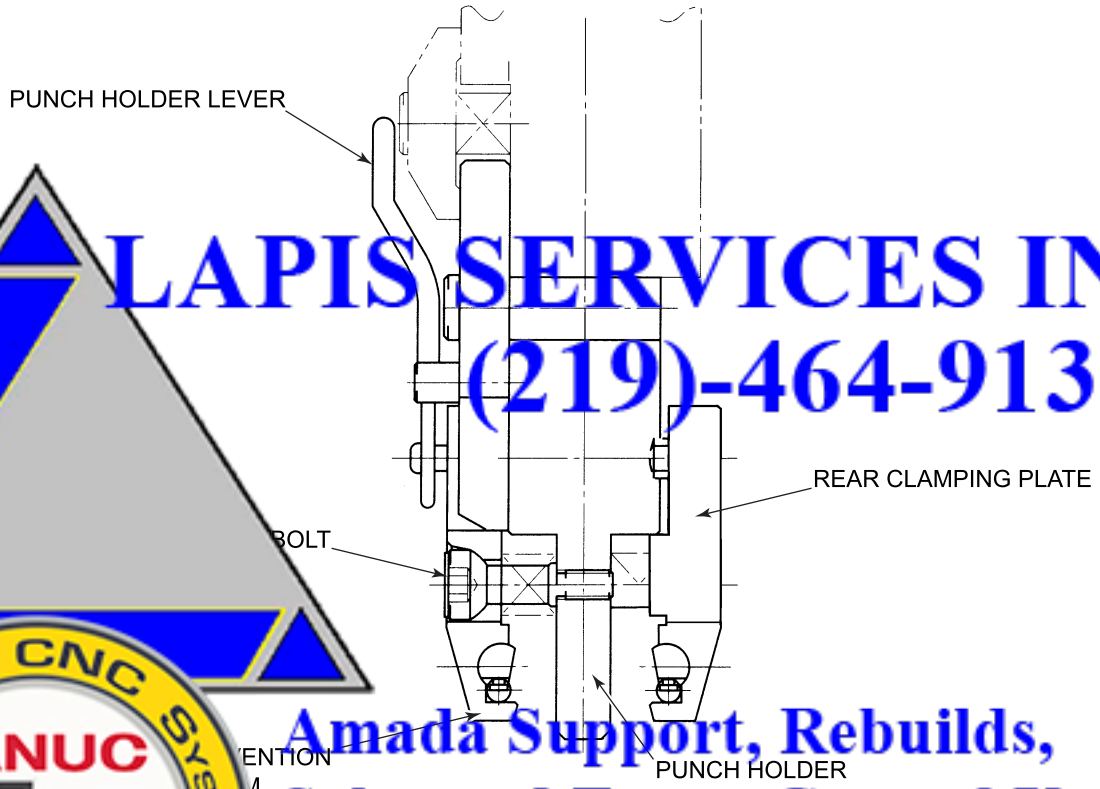

LAPIS SERVICES INC
(219)-464-9131
Amada Support, Rebuilds,
Sales and Fanuc Control Upgrade
AUTHORIZED CNC SYSTEM INTEGRATOR
FANUC

Punch holder lever positions

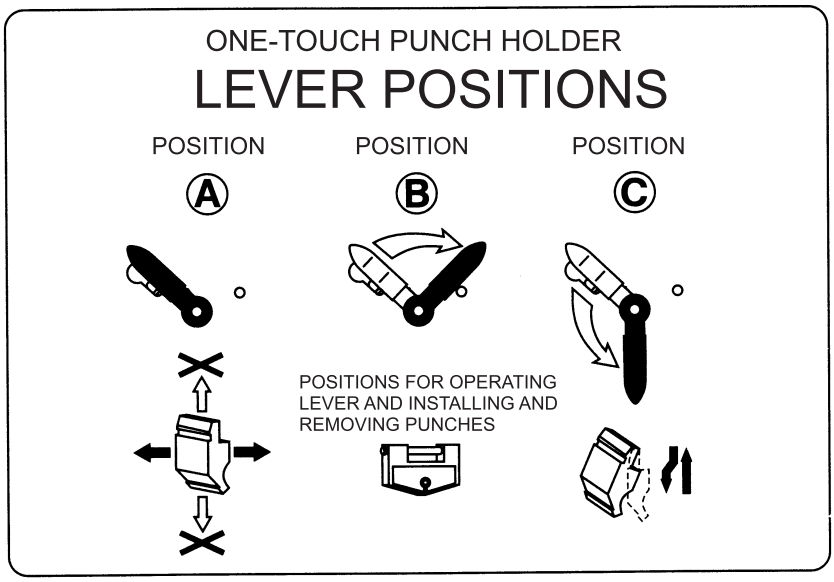

Position Ⓐ

Turn the lever to this position to install and remove the punches by sliding them sideways.

NOTE

- When the lever is turned to the position Ⓐ the punches cannot be installed and removed from the front of the machine.

Position Ⓑ (Basic lever position)

Turn the lever to this position to clamp the punches and to install and remove the lever itself.

Position Ⓒ

Turn the lever to this position to install and remove 100 mm {4 in.} or shorter sectionalized punches from the front of the machine.

LAPIS SERVICES INC
(219)-464-9131
Amada Support, Rebuilds,
Sales and Fanuc Control Upgrade

7-2-1. INSTALLING AND REMOVING PUNCHES FROM FRONT

WARNING

- **Before installing and removing the punches, turn the POWER ON/OFF keyswitch to OFF, remove the key from the keyswitch, and keep it by yourself.**

Installing punches from front

WARNING

- **If the punch is 100 mm {4 in.} or more in length, do not install it from the front of the machine. You cannot safely support it with your hand or hands.**

CAUTION

- **When installing a punch from the front of the machine, push it straight up.**
  If the punch is pushed up inclined, the clamping plate remains open and allows the punch to fall.
  Check that the punch does not fall when pulled down, and then release it.

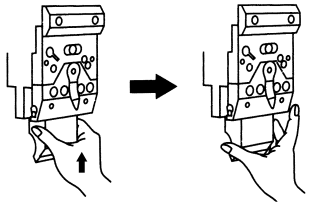

1 Turn down the unclamp stopper pin, and turn the punch holder lever counterclockwise to the position Ⓒ.

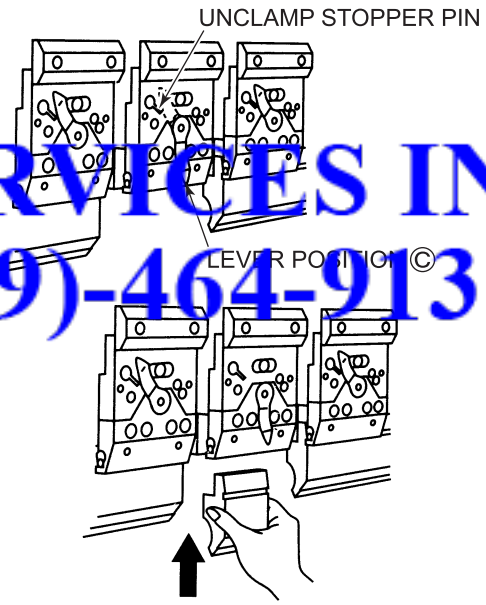

2 Hold the sides of the punch as shown right, and push the punch upward so that it becomes parallel with the punch holder.

LAPIS SERVICES INC
(219)-464-9131
AUTHORIZED CNC SYSTEM INTEGRATOR
FANUC
Amada Support, Rebuilds,
Sales and Fanuc Control Upgrade

3 Turn the punch holder lever clockwise to the position Ⓐ, and turn up the unclamp stopper pin.

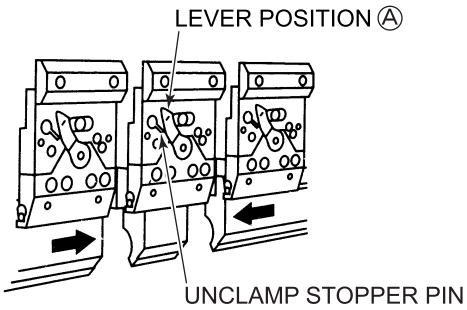

4 After positioning the punch, turn the punch holder lever clockwise to the position Ⓑ to clamp the punch.

5 Install the punch as described in “5-3. Installing punches” in this Part.

LAPIS SERVICES INC
(219)-464-9131
Amada Support, Rebuilds,
Sales and Fanuc Control Upgrade

Removing punches from front

WARNING

- **If the punch is 100 mm {4 in.} or more in length, do not remove it from the front of the machine. You cannot safely support it with your hand or hands.**

1 Turn down the unclamp stopper pin, and turn the punch holder lever to the position Ⓒ.

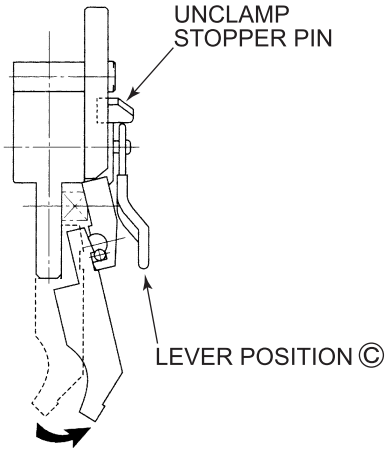

2 Hold the sides of the punch as shown right, and remove the punch from the front of the machine.

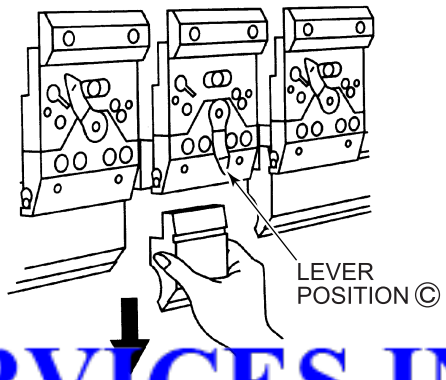

3 Turn the punch holder lever clockwise to the position Ⓐ, and turn up the unclamp stopper pin.

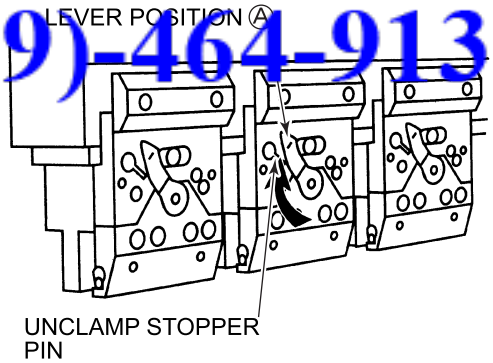

LAPIS SERVICES INC
(219)-464-9131
AUTHORIZED CNC SYSTEM FANUC INTEGRATOR
Amada Support, Rebuilds,
Sales and Fanuc Control Upgrade

7-2-2. INSTALLING AND REMOVING PUNCHES BY SLIDING THEM ALONG GROOVE OF REAR CLAMPING PLATES

WARNING	● **Before installing and removing the punches, turn the POWER ON/OFF keyswitch to OFF, remove the key from the keyswitch, and keep it by yourself.**

Installing punches in rear clamping plates

1 Insert the fall prevention tongue of the punch into the fall prevention groove of the rear clamping plate as shown right.

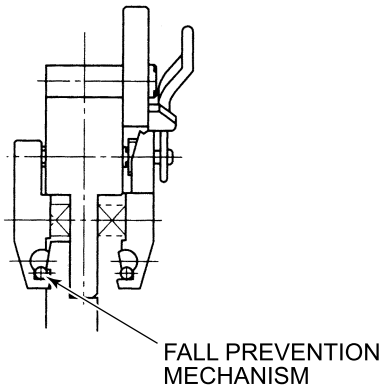

2 After positioning the punch, turn the rear fixing bolts clockwise with an Allen wrench to clamp the punch.

3 Install the punch as described in “5-3. Installing punches” in this Part.

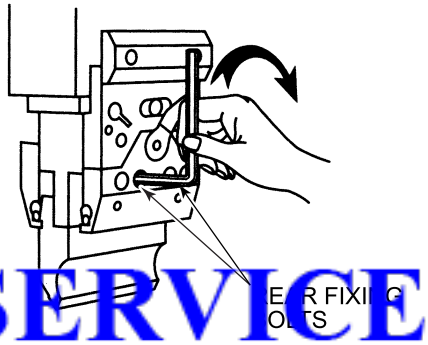

NOTICE

● When turning the rear fixing bolts with the llen wrench to clamp punch, be sure to en the left and f the rear g plate parallel equal force. ighten the te with f a long the rability of the leville springs may r.

LAPIS SERVICES INC
(219)-464-9131
Amada Support, Rebuilds,
Sales and Fanuc Control Upgrade
AUTHORIZED CNC SYSTEM INTEGRATOR
FANUC

Removing punches from rear clamping plates

> **WARNING**
> ● **When loosening the rear fixing bolts, do not turn them counterclockwise by more than one and a half turns. If the bolts are turned by more than one and a half turns, the rear fall prevention mechanism does not operate, allowing the punch to fall in a dangerous manner.**

1 Turn the rear fixing bolts counterclockwise by one turn with an Allen wrench as shown right.

2 Remove the punch by sliding it sideways.

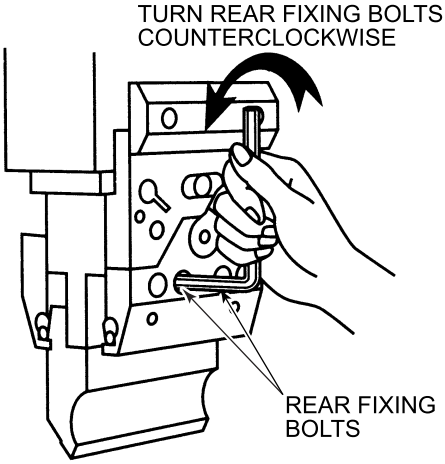

7-2-3. INSTALLING AND REMOVING REAR CLAMPING PLATES

> **WARNING**
> ● **Before installing and removing the rear clamping plates, turn the POWER ON/OFF keyswitch to OFF, remove the key from the keyswitch, and keep it by yourself.**

LAPIS SERVICES INC
(219)-464-9131

Before installing and removing the rear clamping plates, be sure to remove the punch holder units from the upper beam.

ar clamping plates

1 Place the punch holder unit so that the rear clamping plate faces down as shown right.

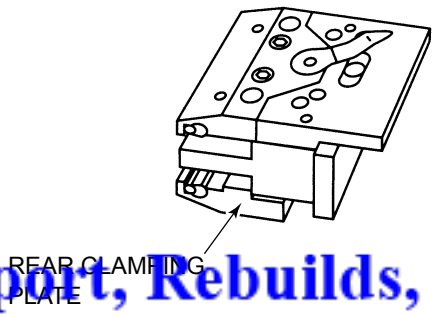

Amada Support, Rebuilds,
Sales and Fanuc Control Upgrade

2 Turn the rear fixing bolts counterclockwise with an Allen wrench, and remove them from the rear fixing nuts.

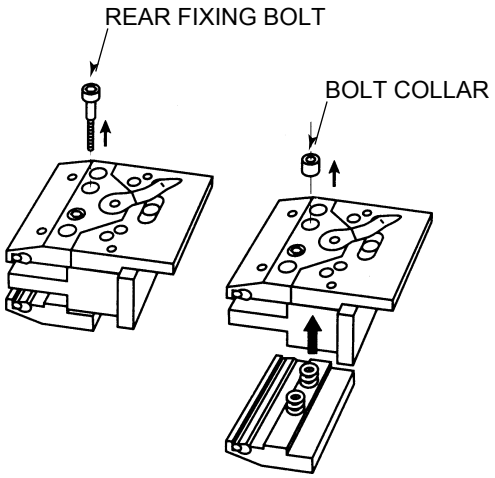

3 Remove the bolt collars from the front clamping plate, lift the punch holder, and remove the rear clamping plate.

Assemble the rear clamping plate as shown right, and store it.

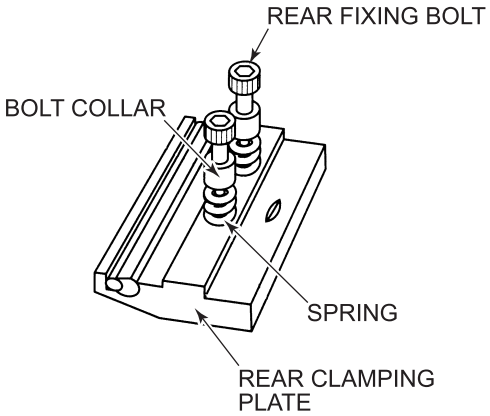

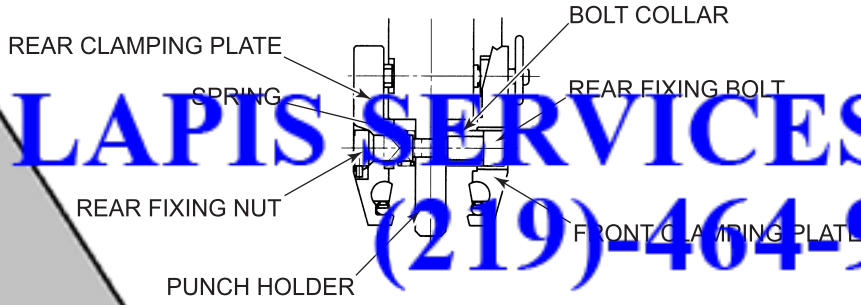

LAPIS SERVICES INC
(219)-464-9131
AUTHORIZED CNC SYSTEM INTEGRATOR
FANUC
Amada Support, Rebuilds,
Sales and Fanuc Control Upgrade

Installing rear clamping plates

WARNING

- **Do not turn the rear fixing bolts counterclockwise by more than one turn from the finger-tightened position. If the bolts are turned by more than one turn, the rear fall prevention mechanism may not operate, allowing the punch to fall in a dangerous manner.**

1 Place the punch holder unit as shown right with the keys of the rear fixing nuts aligned with the nut anti-rotation keyways of the rear clamping plate.

2 Insert the springs in the spring seats of the rear clamping plate, and position the punch holder as shown right.

3 Insert the bolt collars into the rear fixing-bolt installation holes of the front clamping plate, and finger-tighten the rear fixing bolts clockwise with an Allen wrench while pushing down the front clamping plate.

4 Turn back the rear fixing bolts counterclockwise by one turn from the finger-tightened position, so that the punch can be slid sideways.

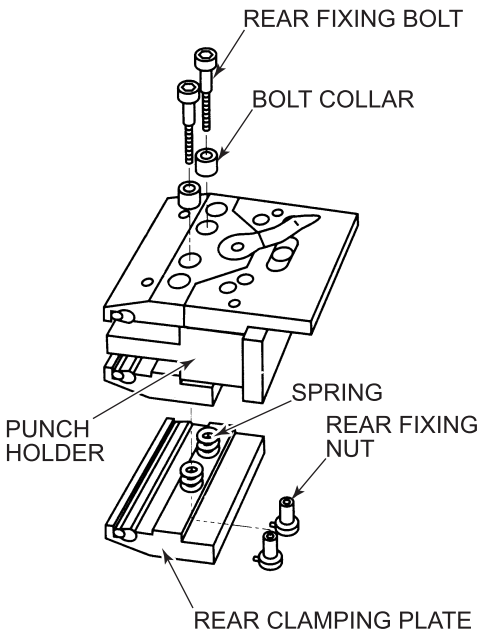

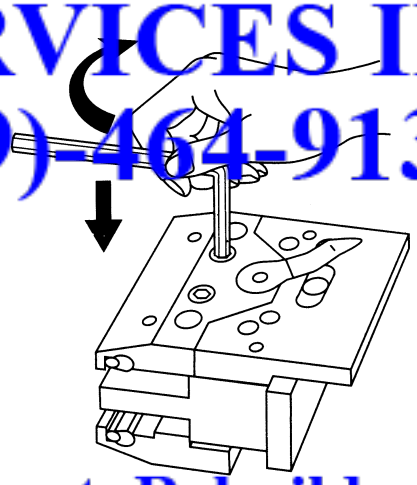

LAPIS SERVICES INC
(219)-464-9131
AUTHORIZED CNC SYSTEM FANUC INTEGRATOR
Amada Support, Rebuilds,
Sales and Fanuc Control Upgrade

8. ALIGNING TOOLS

WARNING

- **Never put your hand or hands between the punches and dies.**
- **Apply to the installed tools a pressure that is not higher than the allowable tonnage marked on them. Unless a proper pressure is applied to them, the tools may break and scatter in a dangerous manner.**

After installing the tools, align them as described below.

When you reinstall the dies after removing them together with the die holders, align them again.

8-1. RG35S

1 Turn the POWER ON/OFF keyswitch to ON.

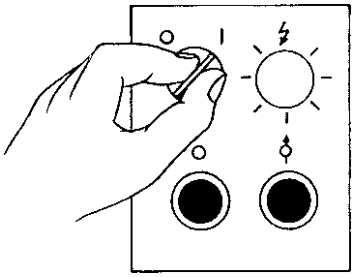

2 Press the HYD. ON button.

The button illuminates, and the hydraulic pump motor starts.

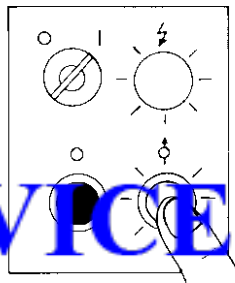

LAPIS SERVICES INC
(219)-464-9131

the pedal stopper, and
ess the bar pedal.

closes to the multiple
it and stops.

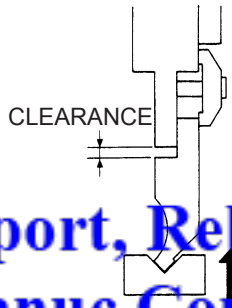

Amada Support, Rebuilds,
Sales and Fanuc Control Upgrade

4 With the bar pedal fully pressed, slowly turn the multiple opening limit setting handwheel clockwise.

The ram slowly closes. (Its multiple closing limit rises.)

5 When the clearance between the punches and punch holders is about to disappear, turn the multiple closing limit setting handwheel further clockwise, while checking the pressure gauge, in order to apply the pressure until the pointer of the pressure gauge indicates the NC9 value.

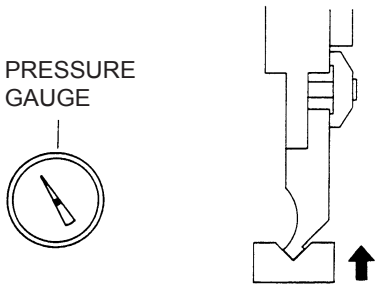

WARNING

- **If the allowable tonnage of the installed tools is smaller than the NC9 value, set their origin with a pressure smaller than the allowable tonnage.**

6 Tighten the handwheel lock knob to lock the multiple closing limit setting handwheel.

7 Press the bar pedal two to three times until the dies completely engage with the punches.

8 With the bar pedal fully pressed, retighten the fixing bolts of the punch clamping plates. (If the optional one-touch punch holders are used, retightening their levers is not necessary.)

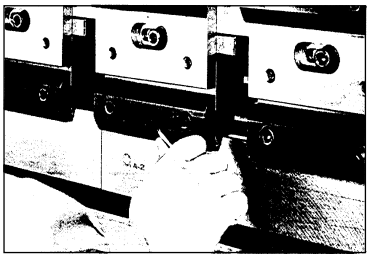

9 When the dies are 2V-dies or slash forming 1V-dies, with the bar pedal fully pressed, tighten the fixing bolts of the dies.

10 Release the bar pedal to complete the tool aligning procedure.

The ram opens to the multiple opening limit and stops.

LAPIS SERVICES INC
(219)-464-9131
Amada Support, Rebuilds,
Sales and Fanuc Control Upgrade

8-2. RG50, RG80, and RG100

CAUTION

- **When you are aligning the tools with the bar pedal locked, do not stop the hydraulic pump motor by pressing the HYD. OFF button or turning the POWER ON/OFF keyswitch to OFF. Doing so will open the ram.**

1 Turn the POWER ON/OFF keyswitch to ON.

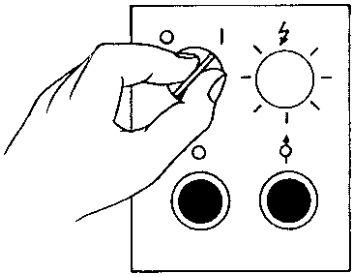

2 Check that the bar pedal lock lever is not pulled forward. If pulled forward, push it back.

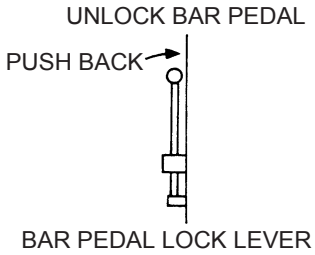

3 Press the HYD. ON button.

The button illuminates, and the hydraulic pump motor starts.

Clear the pedal stopper, and
lly press the bar pedal.
ram closes to the multiple
g limit and stops.

LAPIS SERVICES INC
(219)-464-9131
Amada Support, Rebuilds,
Sales and Fanuc Control Upgrade

5 With the bar pedal fully pressed, slowly turn the multiple closing limit setting handwheel clockwise.

The ram slowly closes. (Its multiple closing limit rises.)

6 When the clearance between the punches and punch holders is about to disappear, turn the multiple closing limit setting handwheel further clockwise, while checking the pressure gauge, in order to apply the pressure until the pointer of the pressure gauge indicates the NC9 value.

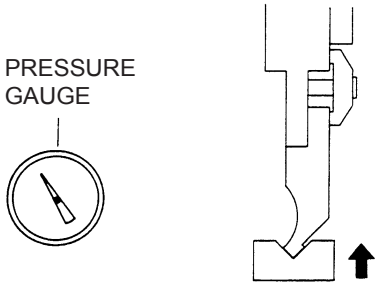

WARNING

- **If the allowable tonnage of the installed tools is smaller than the NC9 value, set their origin with a pressure smaller than the allowable tonnage.**

7 Tighten the handwheel lock knob to lock the multiple closing limit setting handwheel.

8 Press the bar pedal two to three times until the dies completely engage with the punches.

9 Pull forward the bar pedal lock lever, and release the bar pedal.

The bar pedal is locked, and the ram is fixed in that position.

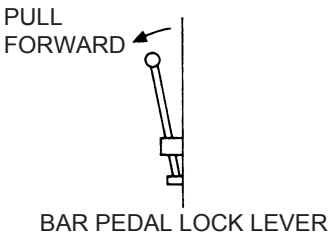

10 Retighten the fixing bolts of the punch clamping plates. (If the optional one-touch punch holders are used, retightening their levers is not necessary.)

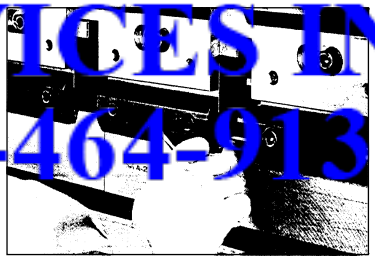

11 When the dies are 2V-dies or sash forming 1V-dies, tighten their fixing bolts.

LAPIS SERVICES INC
(219)-464-9131
Amada Support, Rebuilds,
Sales and Fanuc Control Upgrade
AUTHORIZED CNC SYSTEM
FANUC
INTEGRATOR

12 Clear the pedal stopper, fully press the bar pedal, and push back the bar pedal lock lever.

The bar pedal is unlocked.

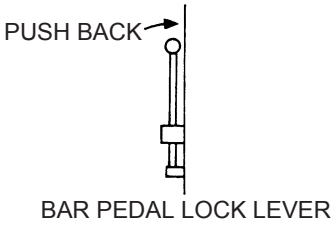

13 Release the bar pedal to complete the tool aligning procedure.

The ram opens to the multiple opening limit and stops.

LAPIS SERVICES INC
(219)-464-9131
Amada Support, Rebuilds,
Sales and Fanuc Control Upgrade

9. SETTING TOOL ORIGIN

WARNING

- **Never put your hand or hands between the punches and dies.**
- **Apply to the installed tools a pressure that is not higher than the allowable tonnage marked on them. Unless a proper pressure is applied to them, the tools may break and scatter in a dangerous manner.**

After aligning the tools, set their origin as required. Once set, the tool origin comes convenient for bending jobs that must be repeatedly performed.

Do as described below, and record the value of the digital multiple closing limit display when the worksheet is bent to an accurate angle. When you set the digital multiple closing limit display to the recorded value, you can repeat the same bending job.

1 With the bar pedal fully pressed, turn the multiple closing limit setting handwheel clockwise to apply the pressure until the pointer of the pressure gauge indicates the NC9 value.

WARNING

- **If the allowable tonnage of the installed tools is smaller than the NC9 value, set their origin with a pressure smaller than the allowable tonnage.**

2 When the pointer of the pressure gauge indicates the NC9 value, press the reset button of the digital multiple closing limit display.

The display is reset to “0”.

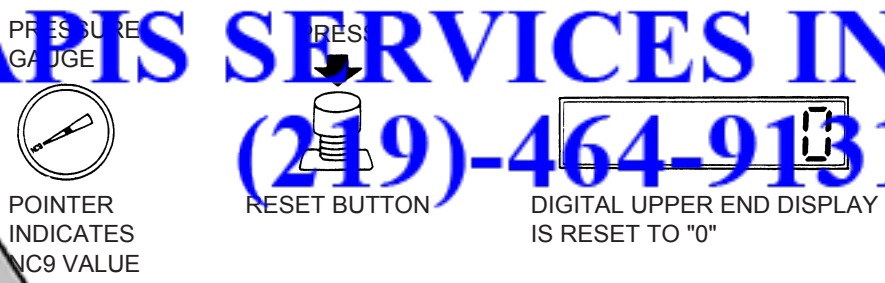

Model	Tool origin setting pressure (NC9 valve)
S	22 kN {2.53 US tonf}
RG50, RG80	53 kN {5.95 US tonf}
RG100	58 kN {6.50 US tonf}

LAPIS SERVICES INC
(219)-464-9131
Amada Support, Rebuilds,
Sales and Fanuc Control Upgrade
AUTHORIZED CNC SYSTEM INTEGRATOR FANUC

10. BENDING OPERATION

WARNING	● **Never put your hand or hands between the punches and dies.** ● **Apply to the installed tools a pressure that is not higher than the allowable tonnage marked on them. Unless a proper pressure is applied to them, the tools may break and scatter in a dangerous manner.**

Tool selection is very important in bending. Select your tools by referring to the AMADA tool catalog. Usually, the allowable tonnage is marked on the tools. If the tools do not have the allowable tonnage marked on them, contact AMADA.

When the ambient temperature drops to 10°C {50°F} or below, the machine varies in the multiple closing limit of the ram. To obtain stable bending accuracy, warm up the machine by applying a pressure about one-third of its press capacity for about 10 min. (Take care not to apply a pressure larger than the allowable tonnage of the installed tools.)

10-1. Setting rising speed change position

Set the position where to change the rising speed of the ram from the approach speed to the bending speed (low speed) as described below.

1 Pull forward the rising speed change position setting lever.

The setting of the rising speed change position is cleared.

sen the
wheel lock knob
k the multiple
mit setting
l.

iple
tting
ndwheel fully
nterclockwise.

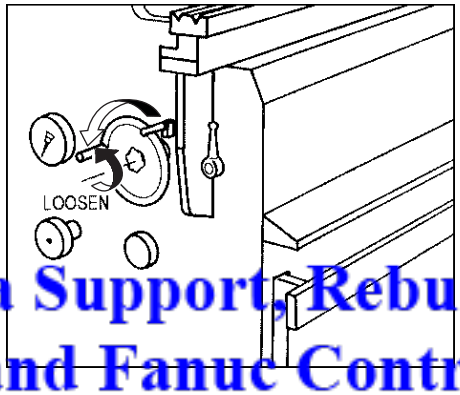

multiple closing
f the ram
es the lowest.

LAPIS SERVICES INC
(219)-464-9131
Amada Support, Rebuilds,
Sales and Fanuc Control Upgrade
AUTHORIZED CNC SYSTEM INTEGRATOR
FANUC

4 Clear the pedal stopper, and fully press the bar pedal.

The ram closes to the multiple closing limit and stops.

5 With the bar pedal fully pressed, turn the multiple closing limit setting handwheel clockwise to close the ram to such a position that the clearance between the punch nose and die top becomes 5 mm {0.2 in.}.

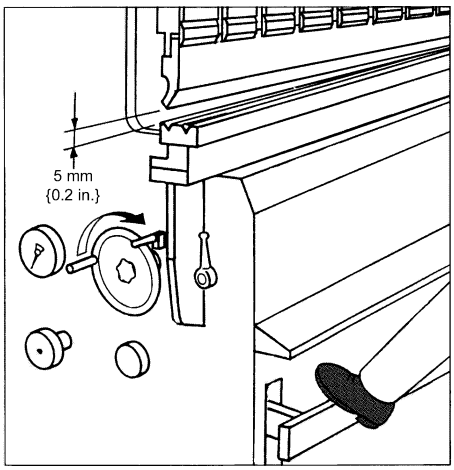

6 With the bar pedal fully pressed, tighten the handwheel lock knob to lock the multiple closing limit setting handwheel.

7 Push back the rising speed change position setting lever.

The rising speed change position is set.

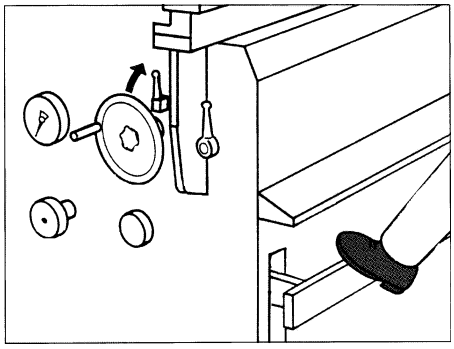

NOTE

- The required press capacity cannot be obtained at any speed other than the bending speed. (The maximum press capacity cannot be obtained at the approach speed.) Before bending, check the rising speed change position.

8 Release the bar pedal.

The ram opens to the maximum opening limit or temporarily set multiple opening limit and stops.

LAPIS SERVICES INC
(219)-464-9131

g multiple opening limit

t the multiple opening limit of the ram with the multiple opening limit ing lever to such a position that the worksheet can be moved in and f the machine without any problems. (For the setting procedure, "4-1. Preparing for removing tools" in this Part.)

Amada Support, Rebuilds,
Sales and Fanuc Control Upgrade

10-3. Bending worksheet

Bend the worksheet as described below.

10-3-1. TEMPORARILY SETTING MULTIPLE CLOSING LIMIT

1 Loosen the handwheel lock knob to unlock the multiple closing limit setting handwheel.

2 Clear the pedal stopper, and fully press the bar pedal.

The ram closes to the multiple closing limit and stops.

3 With the bar pedal fully pressed, turn the multiple closing limit setting handwheel clockwise to close the ram to such a position that the clearance between the punch nose and die top becomes slightly smaller than the worksheet thickness (or the worksheet is to be slightly bent).

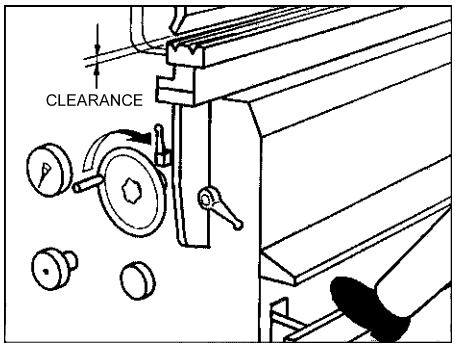

4 With the bar pedal fully pressed, tighten the handwheel lock knob to lock the multiple closing limit setting handwheel.

The multiple closing limit of the ram is temporarily set.

5 Go to “10-3-2. Setting worksheet” on the next page.

LAPIS SERVICES INC
(219)-464-9131
Amada Support, Rebuilds,
Sales and Fanuc Control Upgrade

10-3-2. SETTING WORKSHEET

WARNING

- **Do not adjust the stoppers by reaching from the front of the machine. Adjust the stoppers from the rear of the machine.**

NOTE

- For the operation of the optional backgauge, refer to its operator's manual.

1 Release the bar pedal.

The ram opens to the multiple opening limit and stops.

2 Loosen the lock bolts on the top of the stoppers, and move the stoppers back and forth to set them to the bend width.

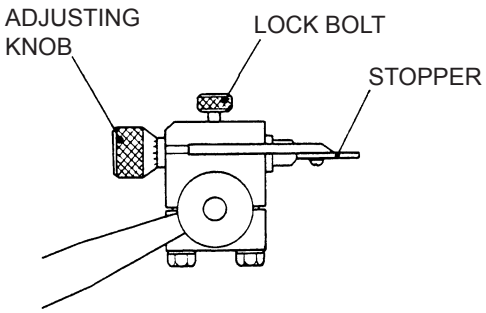

3 Loosen the lock bolts of the supporters, and set the supporters to the worksheet bend length.

4 Place the worksheet on the installed dies, and push it against the stoppers while aligning its center in the left/right direction approximately with the center of the ram.

NOTE

- When an uneven load is imposed on the left or right side of the ram and the resultant pressure exceeds the tolerance value, the uneven load prevention device operates and stops the machine. When bending a worksheet, set it so that its center in the left/right direction is approximately aligned with the center of the ram.
- When the uneven load prevention device has operated and stopped the machine, release the bar pedal, to open the ram and clear the operation of the uneven load prevention device. When the HYD. ON button is then pressed and illuminated, the machine can resume its operation.

5 Go to "10-3-3. Setting bend angle" on the next page.

LAPIS SERVICES INC
(219)-464-9131
AUTHORIZED CNC SYSTEM INTEGRATOR
FANUC
Amada Support, Rebuilds,
Sales and Fanuc Control Upgrade

10-3-3. SETTING BEND ANGLE

NOTE

- For the pressure required for a normal bending operation, refer to the bending pressure chart affixed to the machine.

1 While holding the set worksheet with both hands, clear the pedal stopper, and fully press the bar pedal to close the ram to the temporarily set multiple closing limit.

The punches contact and hold the worksheet.

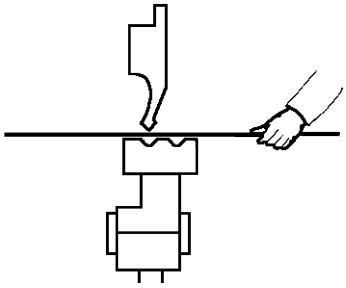

NOTE

- When bending the worksheet along a scribed line, adjust the degree of pressing the bar pedal to stop the ram before the punches contact the worksheet, and align the punch nose line with the scribed line.

2 With the bar pedal fully pressed, loosen the handwheel to unlock the multiple closing limit setting handwheel.

3 With the bar pedal fully pressed, slowly turn the multiple closing limit setting handwheel clockwise until the worksheet is bent to the desired angle.

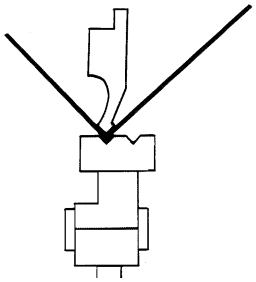

4 With the bar pedal fully pressed, tighten the handwheel lock knob to lock the multiple closing limit setting handwheel.

5 Hold the worksheet with both hands, and release the bar pedal.

The ram opens to the multiple closing limit and stops.

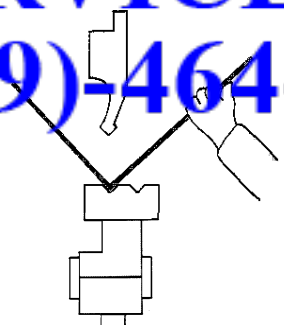

LAPIS SERVICES INC
(219)-464-9131
Amada Support, Rebuilds,
Sales and Fanuc Control Upgrade

6 Remove the worksheet from the machine, and check the bend angle as shown right.

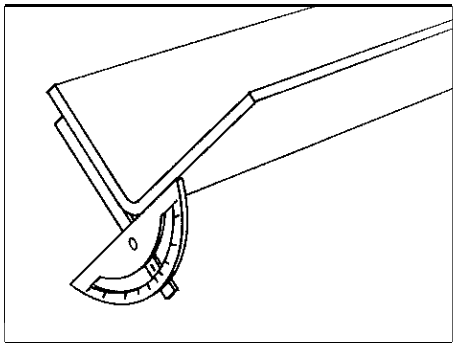

7 When the worksheet is bent to the desired angle, the bending procedure is completed.

When the worksheet is not bent to the desired angle, do as described below.

(a) When the bend angle is larger than the desired angle, set the worksheet again, and repeat steps 1 to 6 above to bend the worksheet to the desired angle.

(b) When the bend angle is smaller than the desired angle, lower the multiple closing limit of the ram, set a new worksheet, and bend it as described in steps 1 to 6 above.

CAUTION

- **Do not turn the multiple closing limit setting handwheel counterclockwise with the bar pedal pressed and held. Doing so may break the multiple closing limit setting mechanism. Even when the handwheel is turned counterclockwise, the ram does not open.**
- **To adjust the multiple closing limit of the ram to a lower position, release the bar pedal to open the ram, turn the multiple closing limit setting handwheel counterclockwise, and press the bar pedal again.**

LAPIS SERVICES INC
(219)-464-9131
AUTHORIZED CNC SYSTEM FANUC INTEGRATOR
Amada Support, Rebuilds,
Sales and Fanuc Control Upgrade

11. TURNING OFF POWER

CAUTION

- **Whenever the machine is not in use, remove the key from the POWER ON/OFF keyswitch, and hand it to the chief operator for custody.**
- **When the ram is positioned above the maximum opening limit, stopping the hydraulic pump motor opens the ram even if the bar pedal is locked. Before stopping the hydraulic pump motor, unlock the bar pedal, and open the ram to the maximum opening limit.**

NOTICE

- When stopping the machine at the end of the day's work, turn off its power with the ram positioned at the multiple opening limit.

Turn off the power of the machine as described below.

1 Turn up the multiple opening limit setting lever to clear the multiple opening limit of the ram.

The ram opens to the maximum opening limits.

2 Press the HYD. OFF button.

The HYD. ON button extinguishes, and the hydraulic pump motor stops.

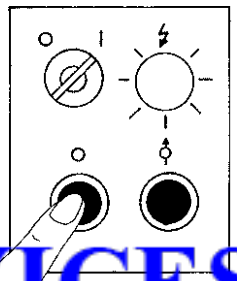

Turn the POWER ON/OFF keyswitch to OFF, and remove the key from the keyswitch.

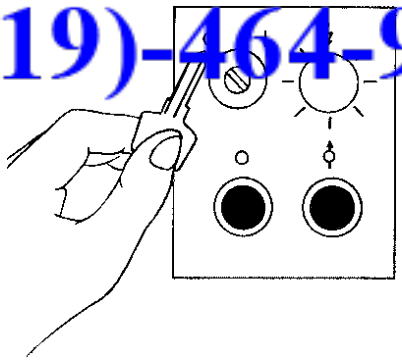

LAPIS SERVICES INC
(219)-464-9131
Amada Support, Rebuilds,
Sales and Fanuc Control Upgrade
AUTHORIZED CNC SYSTEM INTEGRATOR FANUC

4 Turn the machine circuit breaker to OFF.

The POWER lamp extinguishes.

5 Turn off the shop circuit breaker.

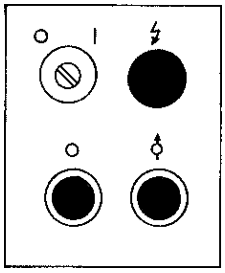

LAPIS SERVICES INC
(219)-464-9131
Amada Support, Rebuilds,
Sales and Fanuc Control Upgrade

12. TROUBLESHOOTING

Symptom	Cause	Remedy
EMERGENCY lamp is illuminated.	EMERGENCY STOP button or buttons are pressed and locked, or ram is not at maximum opening limit.	Refer to “13. Clearing emergency stop condition” in this Part.
HYD. ON button does not illuminate when pressed.	Lamp of button is burnt out.	Turn off machine circuit breaker and shop circuit breaker, and change lamp.
	POWER ON/OFF keyswitch is set to OFF.	Turn it to ON.
	Fuse is blown.	Turn off machine circuit breaker and shop circuit breaker, and change fuse.
	Thermal relay is tripped.	Press its reset button.
	Bar pedal is pressed and held.	Release it. (Unlock it or remove obstacle.)
	Excessive uneven load was applied during bending operation.	Contact AMADA.
	Shop circuit breaker is turned off.	Turn it on.
Ram does not close when bar pedal is press	Pressure adjusting knob is not tightened.	Turn it fully clockwise (+).
	Hydraulic pump motor does not run.	Refer to “HYD. ON button does not illuminate when pressed” described above.
	Hydraulic pump motor runs in reverse direction.	Refer to “2-7. Supplying electric power” in Part III.
	el in hydraulic oil tank is low.	Add oil as described in “2. Maintaining hydraulic system” in Part VI.
	other devices are faulty.	Contact AMADA.
	disconnected.	Contact AMADA.
	ange position is not	Set it again as described in “10-1. Setting rising speed change position” in this Part.
	position setting	Contact AMADA.

LAPIS SERVICES INC
(219)-464-9131
Amada Support, Rebuilds,
Sales and Fanuc Control Upgrade

Symptom	Cause	Remedy
Specified pressure is not delivered.	Pressure adjusting knob is not tightened.	Turn it fully clockwise (+).
	Rising speed change position is not properly set.	Set it again as described in “10-1. Setting rising speed change position” in this Part.
	Oil level in hydraulic oil tank is low.	Add oil as described in “2. Maintaining hydraulic system” in Part VI.
	Hydraulic pump is faulty.	Contact AMADA.
	Filters in hydraulic oil tank are clogged.	Clean or change them as described in “2. Maintaining hydraulic system” in Part VI.
	Seal in cylinder is worn.	Contact AMADA.
Multiple opening limit of ram cannot be set.	Multiple opening limit is not properly set.	Set it again as described in “10-2. Setting multiple opening limit” in this Part.
	Multiple opening limit setting lever is faulty.	Contact AMADA.
Multiple closing limit of ram cannot be set.	Handwheel lock knob was overloosened so that multiple closing limit setting handwheel became faulty.	1 Remove handwheel lock knob. 2 Expand internal pin with scriber or other sharp-pointed tool. 3 Reinstall handwheel lock knob as shown below. If you are unable to remedy trouble, contact AMADA.

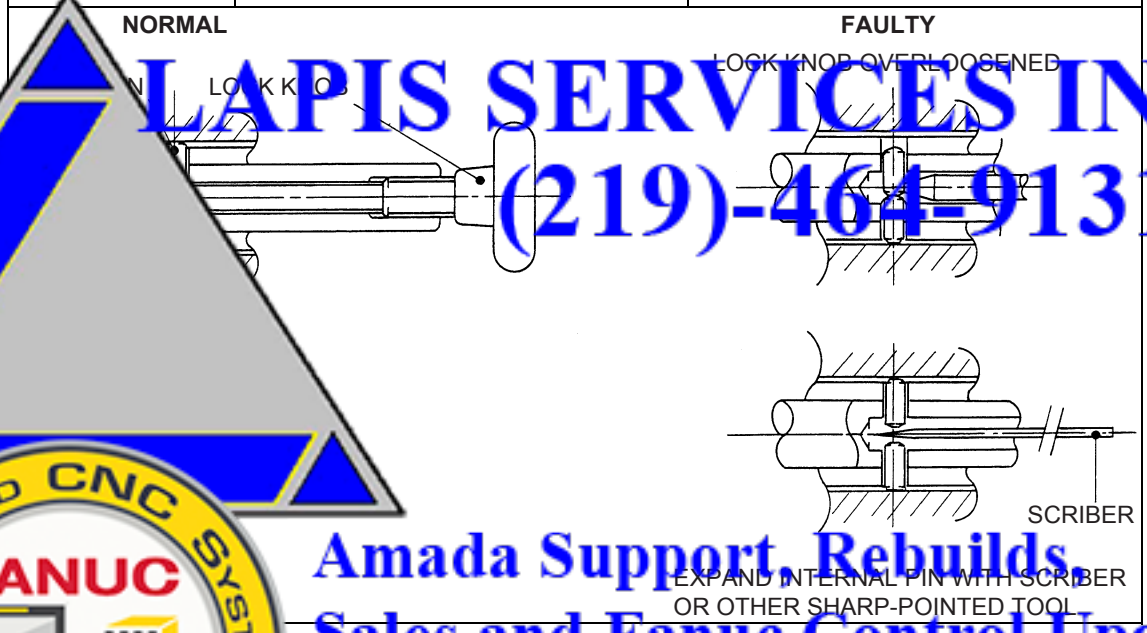

LAPIS SERVICES INC
(219)-464-9131
Amada Support, Rebuilds,
Sales and Fanuc Control Upgrade
AUTHORIZED CNC SYSTEM INTEGRATOR
FANUC

13. CLEARING EMERGENCY STOP CONDITION

When one of the EMERGENCY STOP buttons is pressed, the ram and the hydraulic pump motor immediately stop, and the EMERGENCY lamp comes on. Clear the emergency stop condition as described below.

1. Pull the pressed EMERGENCY STOP button.
2. If the multiple opening limit of the ram is set, turn up the multiple opening limit setting lever to clear the multiple opening limit.
3. Press the DOWN button to open the ram to the maximum opening limit and extinguish EMERGENCY LAMP.
4. Press the HYD. ON button to start the hydraulic pump motor.

LAPIS SERVICES INC
(219)-464-9131
Amada Support, Rebuilds,
Sales and Fanuc Control Upgrade

Part VI

Maintenance

1. Inspection before start of day's work *VI-2*
2. Maintaining hydraulic system *VI-4*
   2-1. Checking hydraulic oil level *VI-4*
   2-2. Changing hydraulic oil *VI-5*
   2-3. Maintaining tools *VI-6*
3. Lubrication *VI-7*
4. Hydraulic circuit diagrams *VI-8*
   4-1. RG35S *VI-8*
   4-2. RG50, RG80, and RG100 ..... *VI-10*
5. Electric circuit diagrams *VI-13*

LAPIS SERVICES INC
(219)464-9131

WARNING

- **Unless you need electric and hydraulic power when maintaining or cleaning the machine, turn off the shop circuit breaker, and relieve the residual hydraulic pressure in the machine.**
- **Post a sign to inform other workers that the machine is under maintenance.**

AUTHORIZED CNC SYSTEM INTEGRATOR FANUC

Amada Support, Rebuilds,
Sales and Fanuc Control Upgrade

1. INSPECTION BEFORE START OF DAY'S WORK

Inspection before the start of the day's work is very important for the safe and trouble-free operation of the machine. Before starting the operation of the machine, be sure to inspect the following items.

No.	Item	Method	Remedy
1	Primary power cable is not damaged.	Visually check.	If cable is damaged, change it immediately.
2	Switches, buttons, and lamps are not functionally or visually damaged.	Visually and tactually check.	If switches and buttons malfunction or are damaged, and if lamps are burnt out, contact AMADA for changing them.
3	Hydraulic pump motor does not produce abnormal noise.	Aurally check.	If abnormal noise is heard, contact AMADA.
4	There are no hydraulic oil leaks.	Visually check.	If there is hydraulic oil leak, contact AMADA for repairing it.
5	Ram normally operates.	Refer to “Checking ram for operation” on next page.	If ram does not normally operate, contact AMADA.
6	EMERGENCY STOP buttons normally operate.	*1* Remove tools from machine. *2* Press bar pedal, and press one of EMERGENCY STOP buttons while ram is closing.	If ram does not stop when EMERGENCY STOP button is pressed, contact AMADA.
7	Tools [illegible] place.	Visually and tactually check.	Correctly install tools. (For detailed procedure, refer to “5. Installing tools” in Part V.)
8	[illegible]	Visually check.	If tools are damaged, change them.
[illegible]	[illegible]	Visually check.	If hydraulic oil level is low, add hydraulic oil. (Refer to “2-1. Checking hydraulic oil level” in this Part.)
[illegible]	[illegible]	[illegible]lly check.	Ask AMADA to change pressure gauge if pointer is missing or does not move, or if glass is broken.

LAPIS SERVICES INC
(219)-464-9131
Amada Support, Rebuilds,
Sales and Fanuc Control Upgrade
AUTHORIZED CNC SYSTEM INTEGRATOR
FANUC

Checking ram for operation

Check the ram for proper operation as described below.

1. Remove the tools from the machine.
2. Fully press the bar pedal.

   The ram closes to the multiple opening limit and stops.

   NOTICE

   - To close the ram with the punches and dies installed, turn the multiple opening limit setting handwheel fully counterclockwise, and fully press the bar pedal.

3. With the bar pedal fully pressed, turn the multiple opening limit setting handwheel clockwise to close the ram to the desired position.
4. Release the bar pedal.

   The ram opens to the maximum opening limit.

LAPIS SERVICES INC
(219)-464-9131
AUTHORIZED CNC SYSTEM INTEGRATOR
FANUC
Amada Support, Rebuilds,
Sales and Fanuc Control Upgrade

2. MAINTAINING HYDRAULIC SYSTEM

If the hydraulic oil is badly contaminated, change it.

NOTICE

- When dirt, dust, and other foreign matter are deposited in large amounts in the hydraulic circuit, the hydraulic pump may produce abnormal noise and decrease in discharge capacity, and the ram may decrease in bending speed and vibrate. These conditions are attributable to the plugging of the filters in the hydraulic oil tank. Remove the filters, and clean or change them.

2-1. Checking hydraulic oil level

Open the ram to the maximum opening limit, turn the POWER ON/OFF keyswitch to OFF, and check that the hydraulic oil is filled to the middle mark of the oil gauge.

If the hydraulic oil level is low, remove the top cover or covers of the hydraulic oil tank, and add the hydraulic oil into the tank.

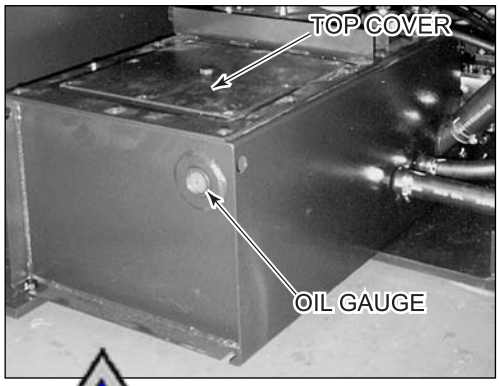

[RG35S]

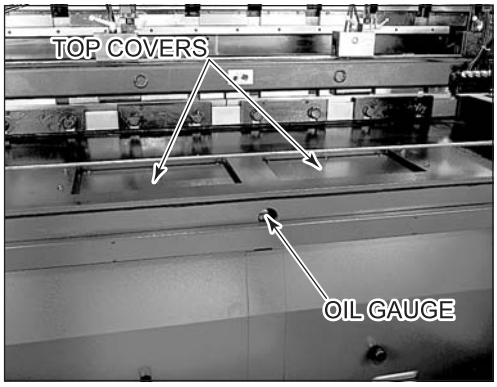

[RG50, RG80, RG100]

LAPIS SERVICES INC
(219)-464-9131
Amada Support, Rebuilds,
Sales and Fanuc Control Upgrade

NOTICE

- Be sure to add the same hydraulic oil as originally used.
- Check that the hydraulic pressure indication is stable when pressure is applied.

2-2. Changing hydraulic oil

Change the hydraulic oil after about first three months of machine operation and every year or 2000 hours of machine operation thereafter. (The hydraulic oil should be changed entirely even if it was added in the midway.)

Model	Tank capacity
RG35S	26 L {6.9 US gal}
RG50, RG80	51 L {13.5 US gal}
RG100	65 L {17.2 US gal}

Recommended hydraulic oil: Amada Oil A-110
Esso Nuto H46
Mobil DTE 25
Shell Tellus Oil 46
(ISO VG46 equivalent)

NOTICE

- When the hydraulic oil is changed, also clean the filters in the hydraulic oil tank.

Change the hydraulic oil as described below.

1. Open the ram to the maximum opening limit.
2. Press the HYD. OFF button. The HYD. ON button extinguishes, and the hydraulic pump motor stops.
3. Turn the POWER ON/OFF keyswitch to OFF.
4. Remove all bolts fixing the two top covers of the tank, and remove the top covers. (For the RG35S remove the one top cover in the same way.)
5. Drain the old hydraulic oil from the tank into an empty can, using a pump.
   If the pump is not available, prepare an empty can of such a capacity as to match the tank capacity (refer to the table above), and place it below the drain plug of the tank. Remove the drain plug to drain the old hydraulic oil from the tank into the can.
6. Wipe the inside of the tank with a clean cloth.
7. Remove all filters from the tank.
   Blow the dust off the inside of the filters with an air gun.
   Replace the filters in the tank.

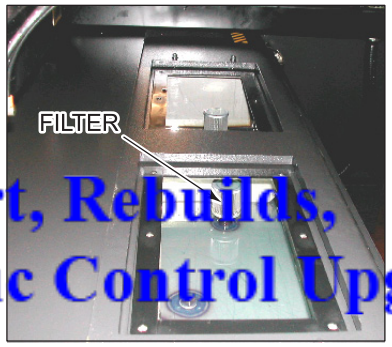

LAPIS SERVICES INC
(219)-464-9131
Amada Support, Rebuilds,
Sales and Fanuc Control Upgrade
AUTHORIZED CNC SYSTEM
FANUC
INTEGRATOR

10 Replace the drain plug if removed.

12 Pour new hydraulic oil into the tank.

13 Replace the tank top cover or covers.

2-3. Maintaining tools

To keep the tools in the best condition, pay attention to the following items:

- When storing the tools in their case, place them on a soft protective material like wood.
- Apply rust-preventive grease or machine oil to the tools, and take constant care to prevent them from rusting.
- If the same portions of the tools are repeatedly used for bending worksheets, they partially wear and decrease in bending accuracy. Periodically change the arrangement of the tools on the upper beam and ram.
- To maintain bending accuracy, regrind the tools as soon as they are worn.

NOTE

● For regrinding the tools, contact AMADA.

LAPIS SERVICES INC
(219)-464-9131
AUTHORIZED CNC SYSTEM INTEGRATOR
FANUC
Amada Support, Rebuilds,
Sales and Fanuc Control Upgrade

3. LUBRICATION

WARNING

- **Before maintaining or cleaning the machine, turn off the shop circuit breaker, and relieve the residual hydraulic pressure in the machine.**
- **Post a sign to inform other workers that the machine is under maintenance.**

Lubrication is very important to maintain bending accuracy and avoid machine troubles. Be sure to appropriately lubricate the machine.

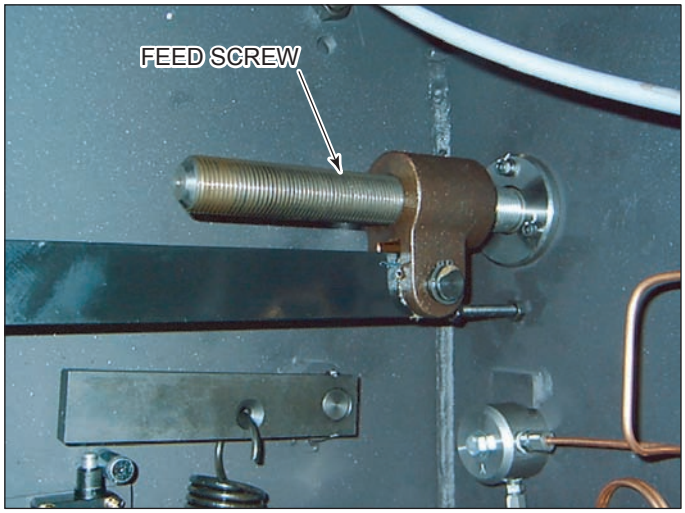

Apply grease to the feed screw.

Recommended lubricant: Shell Alvania EP Grease R0 or equivalent

Lubrication interval: Six months

LAPIS SERVICES INC
(219)-464-9131
AUTHORIZED CNC SYSTEM INTEGRATOR
FANUC
Amada Support, Rebuilds,
Sales and Fanuc Control Upgrade

4. HYDRAULIC CIRCUIT DIAGRAMS

4-1. RG35S

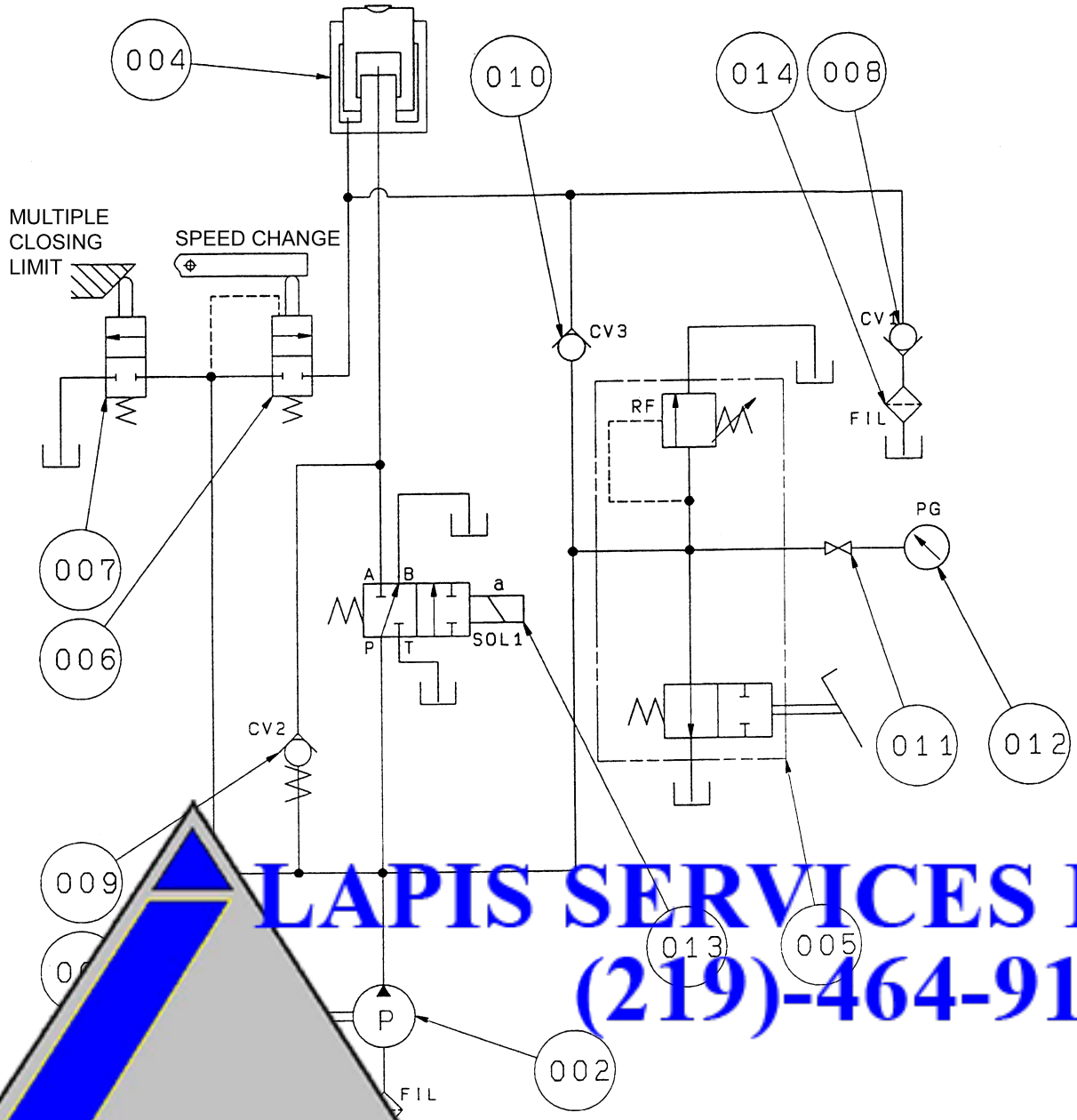

LAPIS SERVICES INC
(219)-464-9131
Amada Support, Rebuilds,
Sales and Fanuc Control Upgrade

Hydraulic parts list

No.	Name	Qty
		RG35S
001	AC motor	1
002	Hydraulic pump	1
003	Hydraulic filter	1
004	Main cylinder	1
005	Distributor	1
006	Sequence valve	1
007	Multiple closing limit valve	1
008	Check valve	1
009	Check valve	1
010	Check valve	1
011	Cut-off valve	1
012	Pressure gauge	1
013	Solenoid valve	1
014	Hydraulic filter	1

LAPIS SERVICES INC
(219)-464-9131
AUTHORIZED CNC SYSTEM INTEGRATOR
FANUC
Amada Support, Rebuilds,
Sales and Fanuc Control Upgrade

4-2. RG50, RG80, and RG100

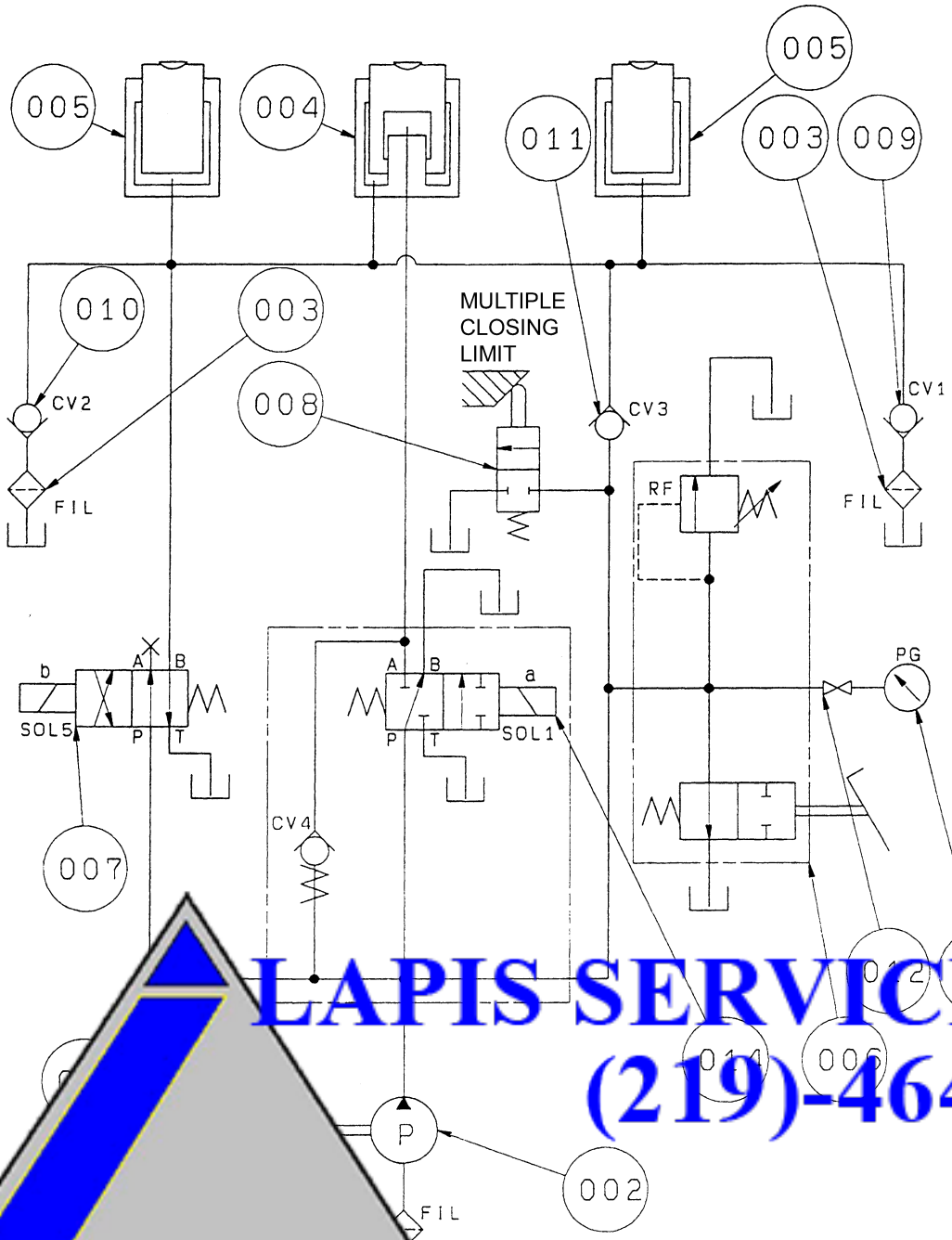

LAPIS SERVICES INC
(219)-464-9131
Amada Support, Rebuilds,
Sales and Fanuc Control Upgrade

Hydraulic parts list

No.	Name	Qty		
		RG50	RG80	RG100
001	AC motor	1	1	1
002	Hydraulic pump	1	1	1
003	Hydraulic filter	3	3	3
004	Main cylinder	1	1	1
005	Auxiliary cylinder	2	2	2
006	Distributor	1	1	1
007	Solenoid valve	1	1	1
008	Multiple closing limit valve	1	1	1
009	Check valve (1)	1	1	1
010	Check valve (2)	1	1	1
011	Check valve (3)	1	1	1
012	Cut-off valve	1	1	1
013	Pressure gauge	1	1	1
014	Solenoid valve	1	1	1

LAPIS SERVICES INC
(219)-464-9131
AUTHORIZED CNC SYSTEM INTEGRATOR
FANUC
Amada Support, Rebuilds,
Sales and Fanuc Control Upgrade

LAPIS SERVICES INC
(219)-464-9131

Amada Support, Rebuilds,
Sales and Fanuc Control Upgrade

5. ELECTRIC CIRCUIT DIAGRAM

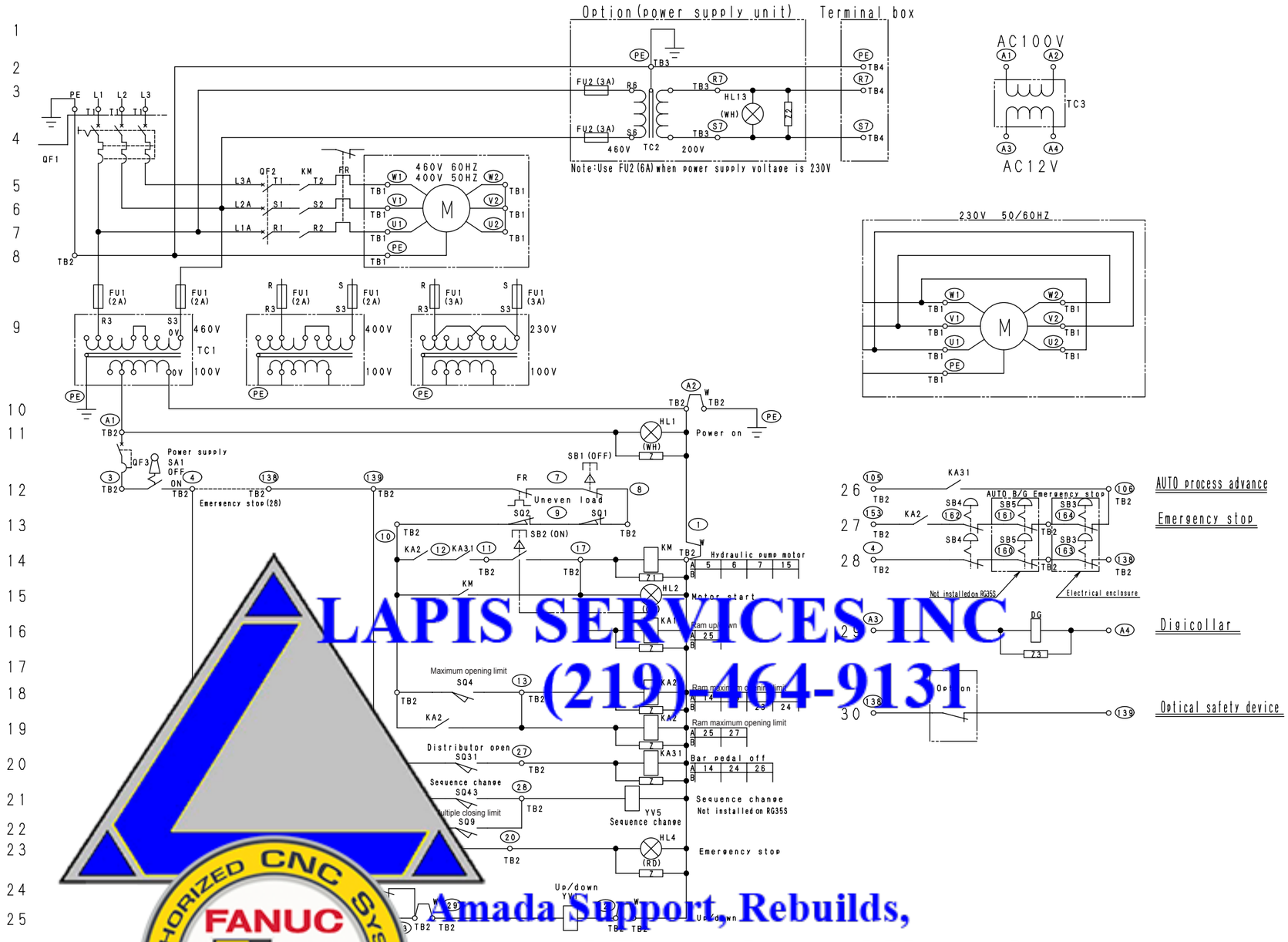

LAPIS SERVICES INC
(219) 464-9131
Amada Support, Rebuilds,
Sales and Fanuc Control Upgrade
AUTHORIZED CNC SYSTEM INTEGRATOR
FANUC

LAPIS SERVICES INC
(219)-464-9131

Amada Support, Rebuilds,
Sales and Fanuc Control Upgrade

Electric parts list

No.	Symbol	Name	Qty
1	M	Motor (three-phase)	1
2	KM	Magnetic switch	1
3	QF1	Circuit breaker (main)	1
4	QF2	Circuit breaker (motor)	1
5	QF3	Circuit protector	1
6	FU1	Fuse	2
	FU2	Fuse (option)	2
7	TC1	Transformer	1
	TC2	Transformer (option)	1
	TC3	Transformer	1
8	SA1	Key selector switch	1
9	SB1	Pushbutton switch	1
	SB2	Pushbutton switch (with lamp)	1
	SB3, 4, 5	Pushbutton switch (push-pull type)	3
10	SQ1, 2	Limit switch	2
	SQ4	Limit switch	1
	SQ9, 31	Limit switch	2
	SQ43	Limit switch	1
11	HL1	Indicator lamp	1
	HL2	Indicator lamp (SB2)	1
	HL4	Indicator lamp	1
	HL13	Indicator lamp (option)	1
12	KA1	High-power relay	1
	KA2, 31	Mini-power relay	3
	DG	Digicollar	1
	YV5	Solenoid valve	1
	Z1	Ceramic surge absorber	1
	Z2	Metal oxide varistor (option)	1
	Z3	Spark killer	1
	Z	Metal oxide varistor	6
	T1	Panblock terminal	4

LAPIS SERVICES INC
(219)-464-9131
Amada Support, Rebuilds,
Sales and Fanuc Control Upgrade
AUTHORIZED CNC SYSTEM
FANUC
INTEGRATOR

No.	Symbol	Name	Qty
17	TB1	Panblock terminal	7
	TB2	Panblock terminal	35
	TB3	Panblock terminal	3
	TB4	Panblock terminal	3

LAPIS SERVICES INC
(219)-464-9131
Amada Support, Rebuilds,
Sales and Fanuc Control Upgrade

LAPIS SERVICES INC
(219)-464-9131

Amada Support, Rebuilds,
Sales and Fanuc Control Upgrade

LAPIS SERVICES INC
(219)-464-9131

Amada Support, Rebuilds,
Sales and Fanuc Control Upgrade

DA COMPANY LTD.
nida, Isehara, Kanagawa, JAPAN

Printed on recycled paper.