HYDRAULIC PRESS BRAKE

HFB

LOW TONNAGE

LAPIS SERVICES INC
(219)-464-9131

OPERATOR MANUAL

X40839

Amada Support, Rebuilds,
Sales and Fanuc Control Upgrade

BP 40040 – 95912 Roissy aéroport CDG cedex – Tel.: +33 (0)1 49 90 30 00, Fax: +33 (0)1 49 90 31 99

Issue 05/99

Copyright © 2005 by Amada America, Inc.

All rights reserved. No part of this work covered by the copyrights hereon may be reproduced or copied in any form or by any means - graphic, electronic, or mechanical, including photocopying, recording, taping or information storage and retrieval systems - without written permission of Amada America, Inc.

This document, containing information which is proprietary and confidential to Amada America, Inc., remains the property of Amada America, Inc. It is provided to you on the express conditions that neither it nor the information contained therein shall be made available to others without the prior express consent of Amada America, Inc. and that the information therein shall be used by you only as permitted by Amada America, Inc. No other uses are authorized.

This document is based on information available at the time of its publication. While efforts have been made to be accurate, the information contained herein does not purport to cover all details of variations in the machinery, or to provide for every possible contingency in connection with installation, operation, and maintenance. Features may be described herein which are not present in all types of machinery. Amada America, Inc. assumes no obligation of notice to holders of this document with respect to changes subsequently made.

LAPIS SERVICES INC
(219)-464-9131
Amada Support, Rebuilds,
Sales and Fanuc Control Upgrade

Edition	Revised by	Details of revision

LAPIS SERVICES INC
(219)-464-9131

Read the manual carefully to obtain a thorough knowledge of this machine.
Strictly follow the installation, operating and maintenance instructions given in this manual to avoid the risk of operator injury.
Keep this document to hand, and refer to it whenever necessary.

Amada Support, Rebuilds,
Sales and Fanuc Control Upgrade

© Amada, Tremblay, April 1999.

Any representation, translation, adaptation or reproduction, even partial, by any method or in any country without prior permission is illegal and would make the offender subject to legal action.

HFB

ERRATA

Filename	Description	Date

LAPIS SERVICES INC
(219)-464-9131
Amada Support, Rebuilds,
Sales and Fanuc Control Upgrade
AUTHORIZED CNC SYSTEM INTEGRATOR FANUC

HYDRAULIC PRESS BRAKE
OPERATOR MANUAL

HFB LOW TONNAGE

CE

IMPORTANT NOTE

ACCEPTANCE

We loaded your press brake onto the carrier's vehicle. The carrier acknowledged receiving it in perfect condition.

However, in the case of a problem during shipping *(which can happen)*, or if you notice signs of damage *(impact marks, etc.)* on your machine, we would like to remind you that you should formulate your reservations as follows:

A – On the delivery note given to you by the carrier on reception.

B – By notifying the carrier and us (for information) by registered letter within 48 hours.

LAPIS SERVICES INC
(219)-464-9131

FOR ANY PROBLEMS DURING MACHINE INSTALLATION

Telephone ☞ ..... **+33 (0)1 49 90 30 00**

Fax ☞ ..... **+33 (0)1 49 90 31 99**

AUTHORIZED CNC SYSTEM INTEGRATOR FANUC
Amada Support, Rebuilds,
Sales and Fanuc Control Upgrade

CONTENTS

1. GENERAL DESCRIPTION 1

1.1. DESCRIPTION 1

1.2. PRINCIPLE 3

2. INSTALLATION, ACCEPTANCE, AND SAFETY MEASURES 1

2.1. PREPARING THE SITE 1

2.2. MACHINE ACCEPTANCE 2

2.3. ACCEPTANCE & HANDLING 3

2.4. ELECTRICAL CONNECTIONS 11

2.5. SAFETY PRECAUTIONS 17

2.6. MACHINE OPERATING AND STORAGE CONDITIONS 34

2.7. MACHINE CHARACTERISTICS 35

2.8. INFORMATION ON NOISE 36

2.9. NORMAL USE, RESERVATIONS, AND EXCLUSIONS 37

LAPIS SERVICES INC
(219)-464-9131
Amada Support, Rebuilds,
Sales and Fanuc Control Upgrade
AUTHORIZED CNC SYSTEM INTEGRATOR
FANUC

3. COMMISSIONING 1

3.1. CLEANING 1

3.2. INSTALLATION OF CONTROL DEVICES 1

3.3. CHECKING THE MAINS POWER SUPPLY 3

3.4. MACHINE LEVELLING 3

3.5. PUTTING THE MACHINE INTO OPERATION 5

3.6. OVERALL CHECK 6

4. TECHNICAL DESCRIPTION 1

4.1. MECHANICAL STRUCTURE 1

4.2. MECHANICAL CONNECTIONS 2

4.3. ELECTRONIC STROKE CONTROL AND PARALLELISM BALANCING SYSTEM 3

4.4. LOCATION OF CONTROL AND SIGNALLING DEVICES 9

4.5. PRESS BRAKE OPERATING LIMITS IN OFF CENTRE WORK 10

4.6. PRESSURE GAUGE 10

5. FORMING TECHNIQUE & TOOLING 1

5.1. GENERAL POINTS 1

5.2. AIR BENDING 5

5.3. COINING 6

5.4. LIST OF STANDARD TOOLS 7

5.5. TOOL INSTALLATION 11

5.6. SPECIAL ACCESSORIES 18

5.7. INSTALLATION AND ADJUSTMENT OF DISTANCE PIECES 19

5.8. PUNCHING 24

LAPIS SERVICES INC
(219)-464-9131
Amada Support, Rebuilds,
Sales and Fanuc Control Upgrade
AUTHORIZED CNC SYSTEM INTEGRATOR FANUC

6. OPERATION **1**

6.1. START-UP 1

6.2. DESCRIPTION OF CYCLES 2

7. MAINTENANCE **1**

7.1. INTRODUCTION 1

7.2. MACHINE PERIODIC MAINTENANCE 3

7.3. RECOMMENDATIONS 10

7.4. TROUBLESHOOTING 26

LAPIS SERVICES INC
(219)-464-9131

AUTHORIZED CNC SYSTEM INTEGRATOR
FANUC

Amada Support, Rebuilds,
Sales and Fanuc Control Upgrade

APPENDICES

This refers to the additional technical documents that accompany and customise your machine, as they are included in the Quality Control File.

LAPIS SERVICES INC
(219)-464-9131
AUTHORIZED CNC SYSTEM FANUC INTEGRATOR
Amada Support, Rebuilds,
Sales and Fanuc Control Upgrade

LAPIS SERVICES INC
(219)-464-9131

Figure 1.1

AUTHORIZED CNC SYSTEM INTEGRATOR
FANUC
Amada Support, Rebuilds,
Sales and Fanuc Control Upgrade

1. GENERAL DESCRIPTION

1.1. DESCRIPTION

The purpose of this document is to facilitate the installation of your Hyper Fine Bender hydraulic press brake (Fig. 1.1) and its connection to the electrical and pneumatic supply systems.

This product line includes the following models:

- HFB 50 (*50 tonnes/2 metres*)
- HFB 80 (*80 tonnes/2.5 metres*)
- HFB 100 (*100 tonnes/3 metres*)

All models are available:

- In a basic version without light curtain,
- Option: light curtain used as front protection and as an operation holding device.

LAPIS SERVICES INC
(219)-464-9131
AUTHORIZED CNC SYSTEM INTEGRATOR
FANUC
Amada Support, Rebuilds,
Sales and Fanuc Control Upgrade

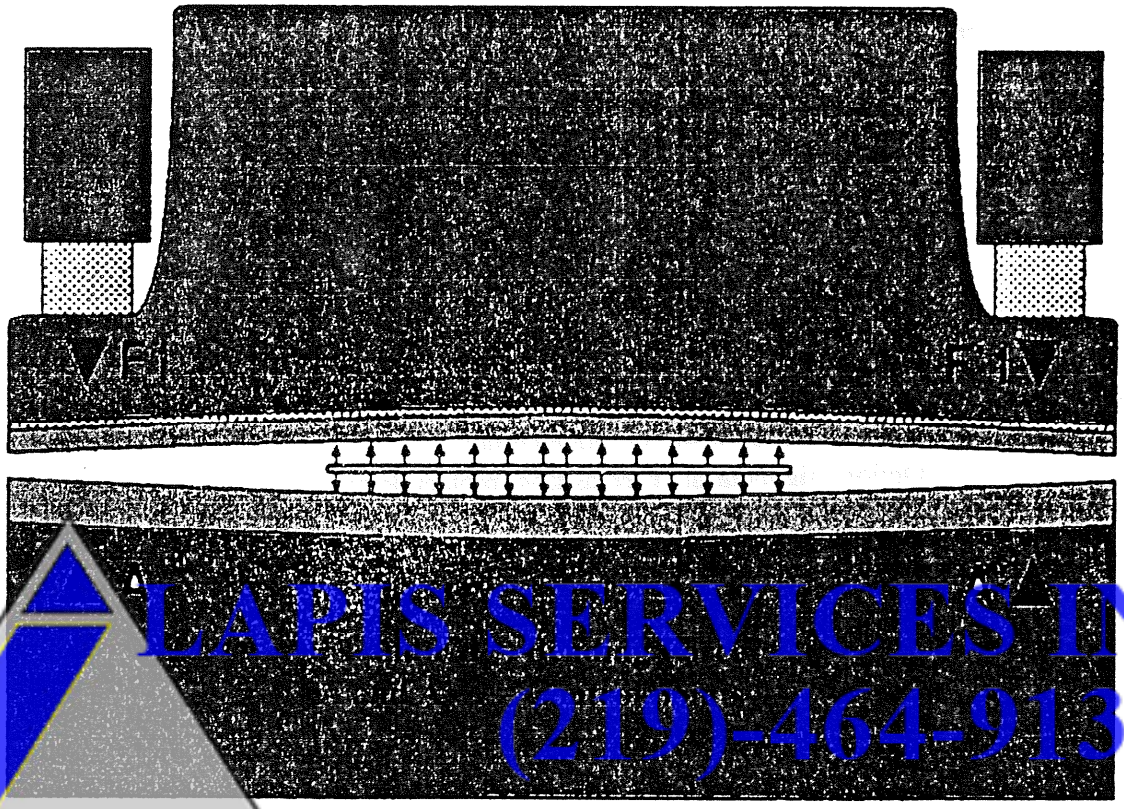

Figure 1.1

LAPIS SERVICES INC
(219)-464-9131
Amada Support, Rebuilds,
Sales and Fanuc Control Upgrade
AUTHORIZED CNC SYSTEM
FANUC
INTEGRATOR

1.2. PRINCIPLE

The machine is a manual load/unload hydraulic press brake.

HFB hydraulic press brakes have an operating upper beam equipped with an electronic box for the control and adjustment of all bending parameters.

These press brakes are equipped with a central reaction lower beam to ensure bending quality.

An electrohydraulic servosystem controls the travel and ensures that the Upper Beam (UB) remains perfectly parallel to the Lower Beam (LB).

These machines can be equipped with various options (back gauge, front gauge, etc.), all Amada tools, and other traditional tools, as well as a range of accessories. (*Contact our Regional Sales Representative to discuss your specific requirements.)*

For items heavier than 25 kg, a handling device must be provided for the operator. This device is not included in the Amada supply (see Para. 5.5).

REVIEW OF THE CLASSIC PRESS BRAKE DESIGN

Traditional press brakes with an operating upper beam are subject to elastic deformation of each beam in opposite directions during bending, caused by the reactions of the part to the thrust of the jacks located at the ends.

These deformations result in a variation of the penetration of the punch in the die; there is slightly less penetration at the centre than at the ends (Fig. 1.2).

LAPIS SERVICES INC
(219)464-9131
AUTHORIZED CNC SYSTEM INTEGRATOR FANUC
Amada Support, Rebuilds,
Sales and Fanuc Control Upgrade

AMADA SYSTEM: Slotted beam (for 35- to 100-tonne press brakes).

The lower beam is a slotted plate. The arrangement, size, and shape of the slots are designed to allow the lower beam to deform in the same direction and with the same deformation as the upper beam under the action of the bending force. The lower beam is welded to the flanges (Figs. 1.2 and 1.3).

ADVANTAGES

Because the small but inevitable elastic deformation of the two beams occurs in the same direction and has the same value, the punch has constant penetration in the die over the entire bending length, thus ensuring a perfect angle.
The small deformation of the beams does not affect the linearity of the bend because the stress induced in the worksheet remains well within the elastic region.

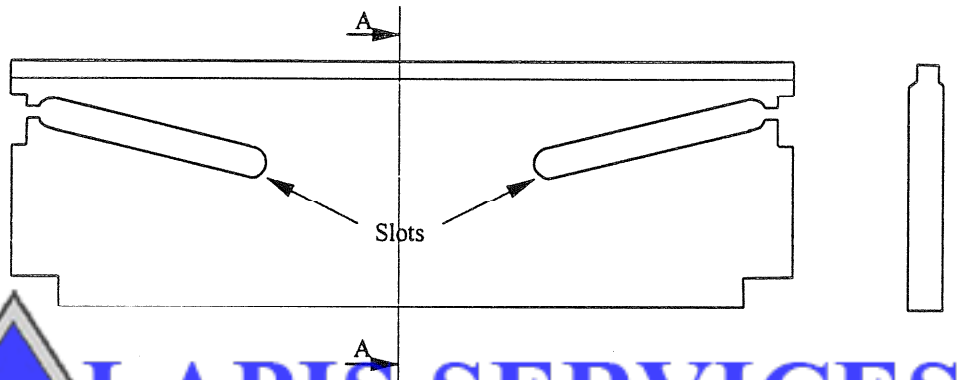

Fig. 1.2

LAPIS SERVICES INC
(219)-464-9131

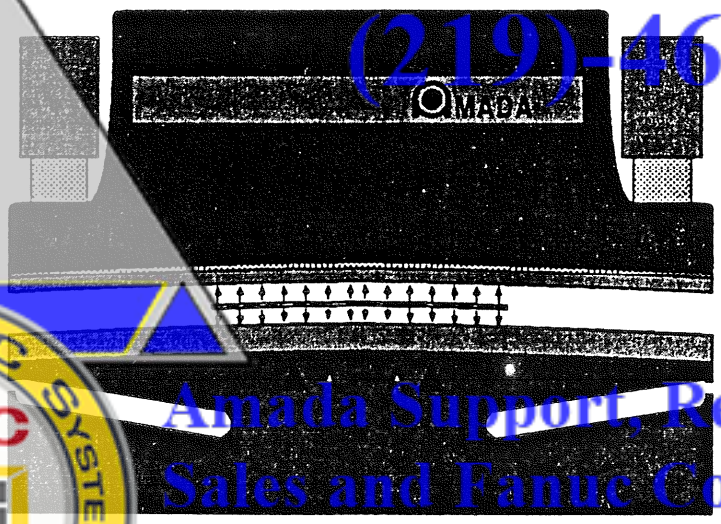

Amada Support, Rebuilds,
Sales and Fanuc Control Upgrade

Fig. 1.3

F1 and F'1 = Bending Force
A and A' = Control points

LAPIS SERVICES INC
(219)-464-9131

AUTHORIZED CNC SYSTEM INTEGRATOR
FANUC

Amada Support, Rebuilds,
Sales and Fanuc Control Upgrade

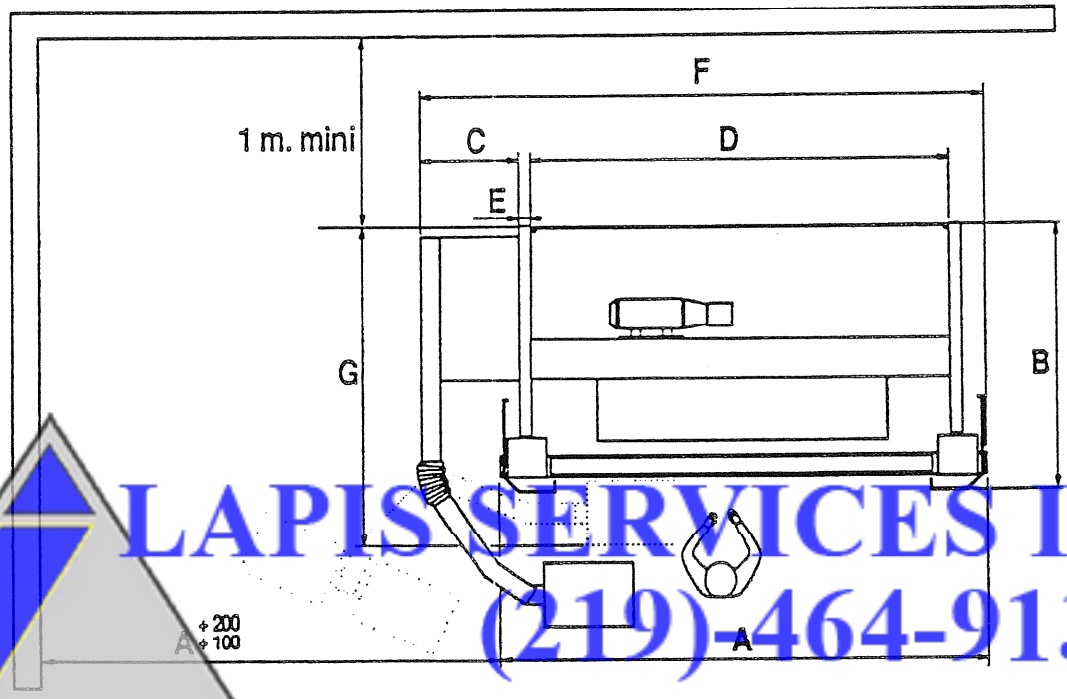

Figure 2.1

LAPIS SERVICES INC
(219)-464-9131
Amada Support, Rebuilds,
Sales and Fanuc Control Upgrade

2. INSTALLATION, ACCEPTANCE, AND SAFETY MEASURES

2.1. PREPARING THE SITE

The press brake must be installed on a stable, rigid floor.
A concrete slab 120 to 150 mm thick with a flat surface (maximum tolerance 2 mm per metre) must be laid in the work area. Please contact our technical department for the installation requirements.
HFB press brakes are manufactured as welded box structures with a low centre of gravity. Anchoring them to the floor is therefore optional.
The press must be accessible from all four sides:

- At the rear, allow clearance of approximately 1 metre to allow various maintenance operations and gauge adjustment to be performed.

- Allow a clearance slightly greater than the maximum bending length on at least one of the two sides. The purpose of this is to allow worksheets that are at least as long as the press to be loaded/unloaded from the side. (*Fig. 2.1; Dimensions A and B*, outline of machine in basic version.)

LAPIS SERVICES INC
(219)-464-9131

MACHINE	A	B	C	D	E	F	G
50	2 141	1 444	320	1 665	35	2 258	1 980
80	2 601	1 446	320	2 125	35	2 718	1 980
100	3 181	1 554	320	2 705	35	3 298	2 080

AUTHORIZED CNC SYSTEM INTEGRATOR
FANUC
Amada Support, Rebuilds,
Sales and Fanuc Control Upgrade

2.2. MACHINE ACCEPTANCE

Recommendations before handling and installation.

Prohibited procedures:

Never press against, or attach handling equipment (slings, hooks, straps, etc.) to, the following components:

- Lower beam,
- Upper beam,
- Electrical cabinet,
- NC bracket,
- Mechanical guards,
- "C" frame (Goose necks),
- Machine covers,
- Back gauge.

Refer to Section 2.3 to identify the recommended floor support areas.

IMPORTANT NOTE
CERTAIN AREAS OF THE MACHINE ARE NOT DESIGNED TO WITHSTAND THE WEIGHT OF A PERSON WITHOUT DEFORMATION. THESE AREAS ARE IDENTIFIED BY THE LABEL SHOWN BELOW.

LAPIS SERVICES INC
(219)-464-9131

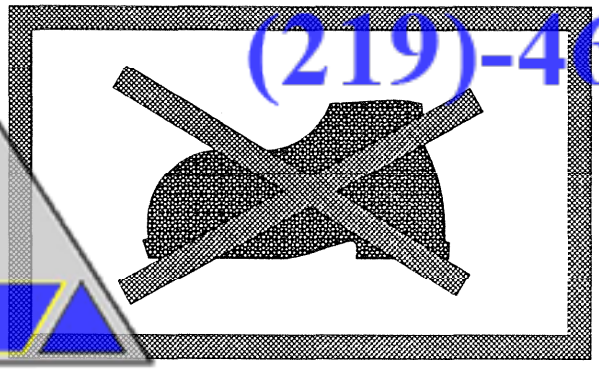

Figure 2.2

Amada Support, Rebuilds,
Sales and Fanuc Control Upgrade

2.3. ACCEPTANCE & HANDLING

2.3.1. LIFTING

Before the vehicle arrives, provide a crane with sufficient capacity to unload the press brake from the vehicle. Ensure that the access doors are sufficiently tall and wide to receive the machine, or its case if packed for transport by sea.

To handle the press brake, use the two sling holes located at Dimension X in the table on Page 5 on the upper part of the uprights. Provide two slings or chains of at least the length given in the table.

CAUTION: Lifting forces must be applied to the sling points provided for this purpose only. Never apply force to the beams, electrical cabinets, covers, etc.

For all machine handling operations, observe the following recommendations:

- Attach the slings, chains, or lifting beam directly, with one load per strand, not exceeding the maximum allowable load.
- Check that the angle α does not exceed 90° (figure page 4/38).
- Lift and set down the machine gently, avoiding any side impact on the machine, or impact as it touches the floor.
- To direct the machine during handling, press on the frame or its packaging only; never press on the beams, electrical cabinets, covers, or guides.

LAPIS SERVICES INC
(219)-464-9131

CAUTION: When a press brake has been crated for sea transport, handling it and removing it from the crate are tricky procedures. We strongly advise you to seek professional assistance. For information on this point, do not hesitate to contact Amada.
The instructions in this section are given for information only, and do not engage the responsibility of Amada.

AUTHORIZED CNC SYSTEM INTEGRATOR FANUC
Amada Support, Rebuilds,
Sales and Fanuc Control Upgrade

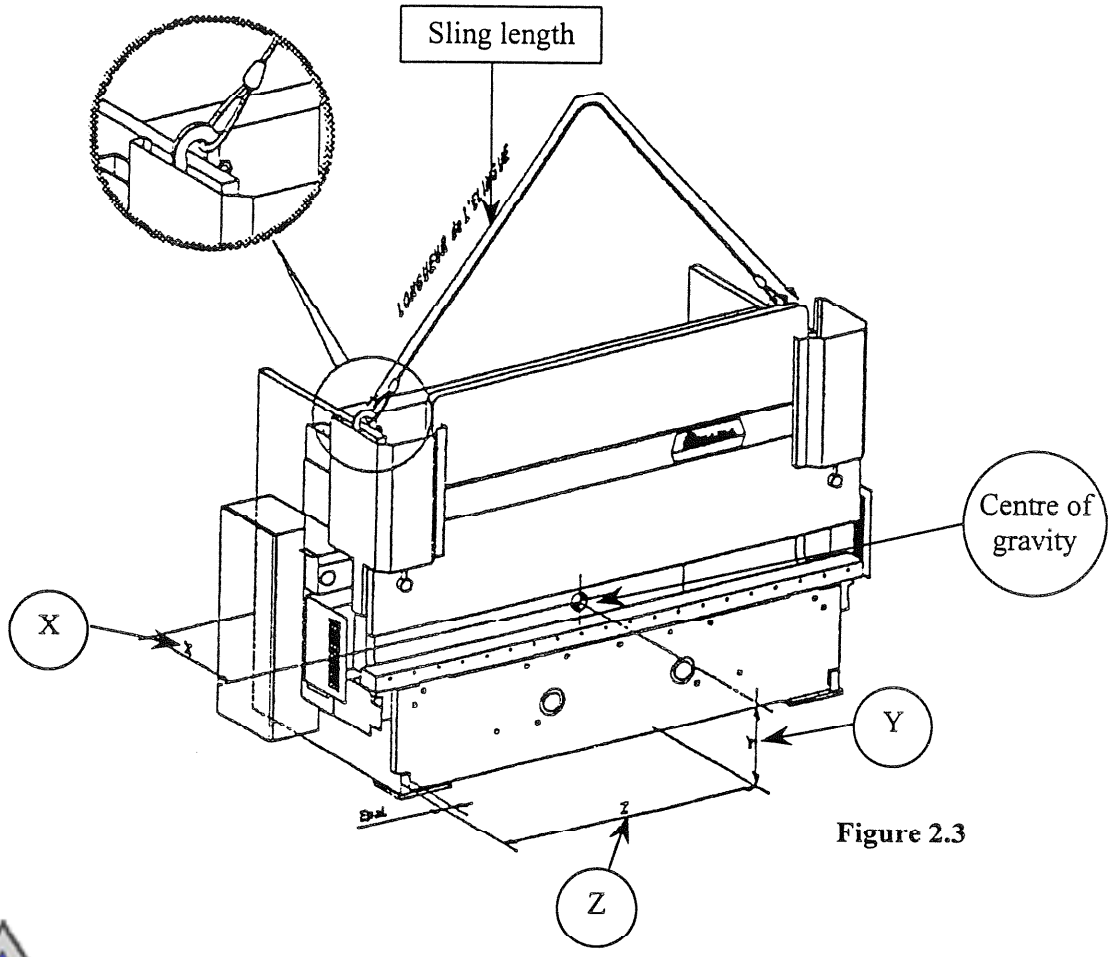

Figure 2.3

Load weight distribution according to sling angles.

Example A : 45° angle
50% of load weight on each sling.

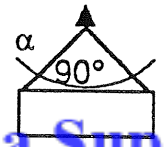

Example B : 90° angle
75% of load weight on each sling

WE RECOMMEND YOU DO NOT EXCEED AN ANGLE OF 90°

LAPIS SERVICES INC
(219)-464-9131
Amada Support, Rebuilds,
Sales and Fanuc Control Upgrade
AUTHORIZED CNC SYSTEM INTEGRATOR
FANUC

2.3.2. BASIC PRINCIPLES

Lifting forces must be applied to the sling points provided for this purpose only.

A lifting beam or slings may be used for handling, in accordance with the provisions of Table and Fig. 2.3.

PRESS TYPE	CENTRE OF GRAVITY X	Y	Z	Upright thickness	WEIGHT (kg)*
HFB 50	450	1 400	770	35	4 520
HFB 80	450	1 400	950	35	5 440
HFB 100	450	1 400 (estimated)	1 150	35	6 520

Add approximately 500 kg to the weight if your machine is equipped with an NC back gauge.

*NOTE
If there is a light guard, add approximately 200 kg.

LAPIS SERVICES INC
(219)-464-9131

The holes at the top front and back of the uprights are used to anchor the machine during transport, but only the front holes are used to handle the machine.

The table below gives the hole diameters, upright thicknesses, upright spacing, and minimum lengths for slings to be used in handling.

	HFB 50 T 2 m	HFB 80 T 2.5 m	HFB 100 T 3 m
Diameter of sling holes (mm)	60	60	60
Upright thickness (mm)	35	35	35
Distance between uprights (mm)	1670	2130	2710
Minimum sling length (mm)	2400	3100	4000

AUTHORIZED CNC SYSTEM INTEGRATOR FANUC
Amada Support, Rebuilds, Sales and Fanuc Control Upgrade

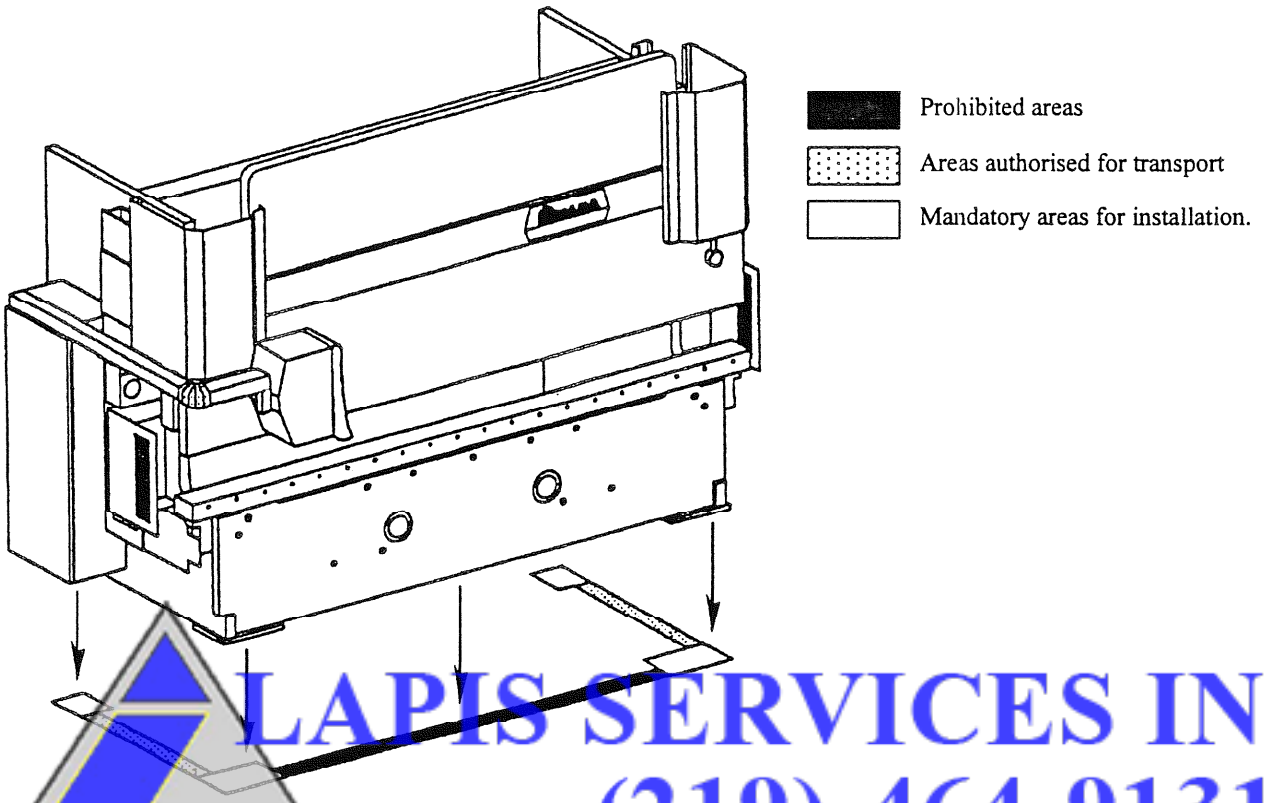

Figure 2.4

LAPIS SERVICES INC
(219)-464-9131
Amada Support, Rebuilds,
Sales and Fanuc Control Upgrade
AUTHORIZED CNC SYSTEM INTEGRATOR
FANUC

CAUTION: The choice of bearing points or anchoring points (Fig. 2.4) other than those specified in Fig. 2.3 on page 4/38, is prohibited. Incidents resulting from a failure to comply with these instructions may lead to the suspension of your guarantee.

Machine Type	LOAD (kg) Front: 420 x 300	Rear: 150 x 150
50	1 450	875
80	1 750	970
100	2 270	1 105

LAPIS SERVICES INC
(219)-464-9131
AUTHORIZED CNC SYSTEM INTEGRATOR FANUC
Amada Support, Rebuilds,
Sales and Fanuc Control Upgrade

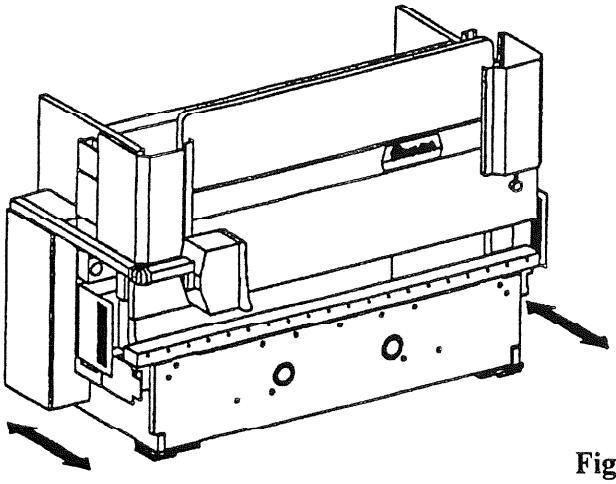

Figure 2.5

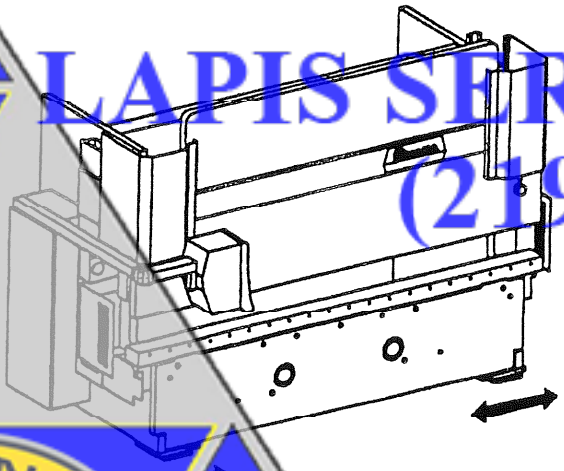

Figure 2.6

LAPIS SERVICES INC
(219)-464-9131
Amada Support, Rebuilds,
Sales and Fanuc Control Upgrade
AUTHORIZED CNC SYSTEM INTEGRATOR
FANUC

2.3.3. EQUIPMENT

Handling operations must be performed as follows:

- Using lifting gear such as a gantry or crane. Use the sling points. These holes can directly receive the shackles to which the hoist rings are attached.

- If appropriate lifting equipment is not available, the press can be moved on skates (Figs. 2.5 and 2.6).

CAUTION: Strictly observe the authorised support areas.

LAPIS SERVICES INC
(219)-464-9131
AUTHORIZED CNC SYSTEM INTEGRATOR
FANUC
Amada Support, Rebuilds,
Sales and Fanuc Control Upgrade

2.3.4. SPECIAL PARTS FOR TRANSPORT

For transport purposes, the upper beam is mechanically held at top dead centre using two props (Item 1), and the back gauge crossmember is immobilised using two spacers (Item 2). Before start-up, remove the red spacer from between the motor and the bracket (Item 3). These accessories are removed by the Amada technician who commissions the machine. They should be kept for use when the machine is moved in the future.

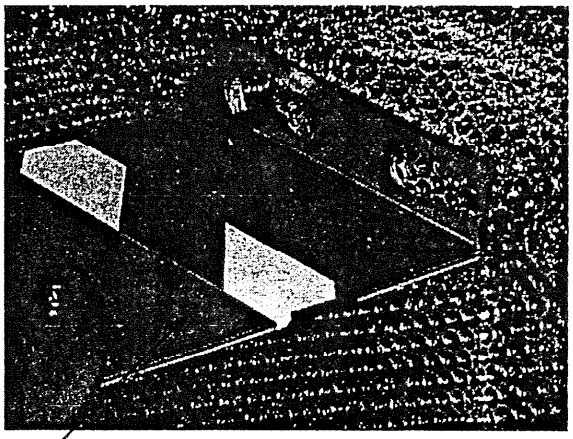

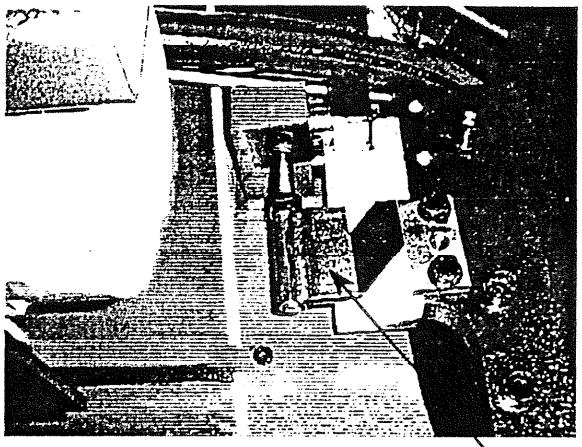

②

①

③

80 and 100 Tonnes only

LAPTS SERVICES INC
(219)-464-9131
Amada Support, Rebuilds, Sales and Fanuc Control Upgrade
AUTHORIZED CNC SYSTEMS INTEGRATOR FANUC

CAUTION

AN UPPER BEAM LOWERING COMMAND MUST NEVER BE GIVEN WHEN THE IMMOBILISING DEVICES ARE IN POSITION.

2.4. ELECTRICAL CONNECTIONS

Correct operation of an electrical system depends on the quality of its power supply; it must be stable and free of interference.

The installation must be designed and built in accordance with the regulatory requirements in force.

2.4.1. GENERAL CHARACTERISTICS OF THE MAINS SUPPLY

- Power supply: Three-phase (*according to mains*).
  ±10% in steady-state,
  ±20% in transient (*20 ms*).

- Pulse mode: 50% of rated value, maximum duration 5 ms

- Harmonics: Maximum 5%

- Frequency: 50 or 60 Hz (*according to mains*).

- Electrical power supply line: Special supply line for the EXCLUSIVE use of the system from the main LOW VOLTAGE panel. The entire system is powered by a single three-phase + earth cable.

2.4.2. EARTH

Any equipment without double insulation requires an earthing connection. This is also important for operation and leak-off to the ground of spurious interference.

The earthing conductor must have a sufficient cross-section. It must be connected to the terminal board of the power supply panel. Like the electrical installation, this earthing connection must be periodically checked by an approved organisation.

The resistance of the earthing connection measured at the terminal closest to the earthing connection must be less than 6 ohms and must comply with the applicable laws and standards.

The green/yellow earthing conductor is exclusively reserved for the system. It is directly connected to the earthing terminal.

LAPIS SERVICES INC
(219)-464-9131
AUTHORIZED CNC SYSTEM INTEGRATOR
FANUC
Amada Support, Rebuilds,
Sales and Fanuc Control Upgrade

2.4.3. MAINS-RELATED AND ENVIRONMENT-RELATED INTERFERENCE

CAUTION: Never solder or weld a component to the machine using any process whatsoever. This could damage the mechanical, electrical, and electronic devices.

Certain electronic components may be subjected to abnormal or excessive voltages or currents liable to cause their destruction.
The installation of adapter components without a galvanic connection to the mains *(voltage stabiliser, inverter, converter unit, transformer, isolating transformer, etc.)* may need to be considered. If necessary, the quality of the electrical power supply should be checked by an approved organisation, and an analysis of the results should determine the type of equipment required.
The following types of interference can be considered as a disturbance to any electronic system:

• Electrostatic Discharge
Electrostatic discharge is particularly critical where the ambient relative humidity is low. It is not unusual for a person or group of people on the move to generate discharges amounting to several thousand volts when touching a door handle or metal frame. It may be necessary to install antistatic equipment. The machine has passed tests to European Standard EN 61000.4.2 concerning immunity to electrostatic discharge.

• Mains Transients
Transients are spurious pulses propagating along mains conductors which may affect system operation. They may be from an internal source, e.g. welding unit, or any other machine generating mains interference, or they may be from an external source, e.g. stormy weather, neighbouring factory, etc. The machine has passed tests to European Standard EN 61000.4.4 concerning immunity to fast transients.

• Stormy Weather
The charges that accumulate during a storm cause transients in electrical lines or connecting cables. Do not use excessively long overhead lines.

• Magnetic Fields
A variable magnetic field causes induction in circuit loops—a major source of interference voltage. Cathode ray tubes are sensitive to magnetic fields, and display this sensitivity by a change in image chromatics or geometry. This is why they are equipped with protective shielding.

LAPIS SERVICES INC
(219)-464-9131
AUTHORIZED CNC SYSTEM INTEGRATOR FANUC
Amada Support, Rebuilds,
Sales and Fanuc Control Upgrade

• Medium- or High-Frequency Electromagnetic Radiation

This type of interference can cause many problems in systems (operational amplifiers, computer memory, etc.). In general, the extent of the disturbance depends on the duration and intensity of the radiation. It may be caused by nearby radar systems or radio transmitters (military, police, FM radio station, etc.), or even by poorly filtered cathode ray tubes.

For optimum operation of your machine, install the press brake in an environment that is free of the disturbances mentioned above (reference values : field 0.2 to 0.5 V/m, frequency band 10 kHz to 1 GHz).

Although the machine has passed tests to European Standards EN 50140 and 50141, we recommend that you install the press brake in an environment that is free of the above-mentioned types of interference.

LAPIS SERVICES INC
(219)-464-9131
AUTHORIZED CNC SYSTEM INTEGRATOR
FANUC
Amada Support, Rebuilds,
Sales and Fanuc Control Upgrade

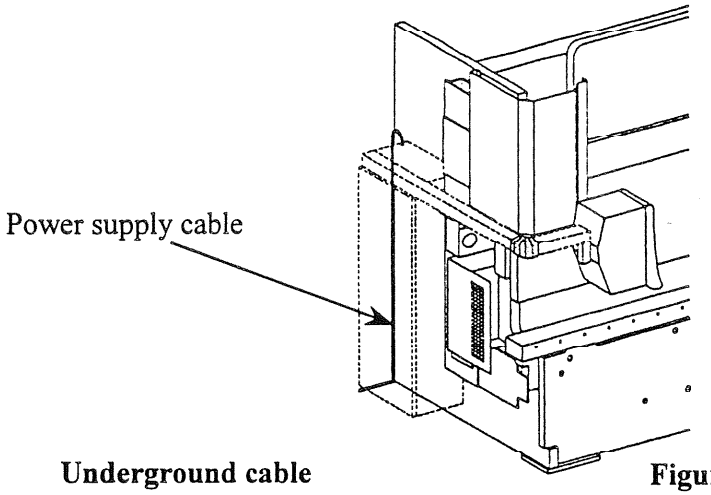

Underground cable duct connection

Figure 2.8

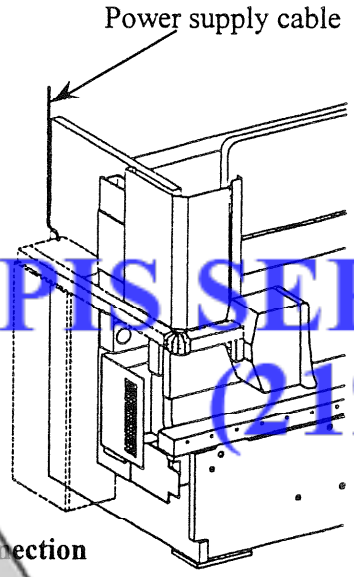

Overhead connection

Figure 2.9

LAPIS SERVICES INC
(219)-464-9131
Amada Support, Rebuilds,
Sales and Fanuc Control Upgrade
AUTHORIZED CNC SYSTEM INTEGRATOR
FANUC

2.4.4. POWER SUPPLY CABLE CHARACTERISTICS

The characteristics of the power supply cable must comply with the safety regulations in force. Cable cross-sections (mm^2) are given for a line less than 20 m long. They are different for the three models in the product range, and for a 400-V power supply.

Manufacturer-recommended cross-section = 4 mm^2

The cable may enter via an underground cable duct, or from overhead (Fig. 2.8 or 2.9).
The power supply cable must never pass through the control cabinet or the "C" frame in front of it.

The machine is equipped with its own current protection devices, but the supply line must be equipped with a cutoff device to protect it from short circuits and overcurrents.
The cable and its mechanical protection devices, if any (cable troughs, raceways, sheaths, etc.) must have a protection rating according to the mechanical risks and corrosive agents to which they are liable to be exposed. The routing of cables and their protective equipment must not cause any hazard (falling) to operators or maintenance personnel.

LAPIS SERVICES INC
(219)-464-9131
AUTHORIZED CNC SYSTEM INTEGRATOR FANUC
Amada Support, Rebuilds,
Sales and Fanuc Control Upgrade

Avoid loading and handling areas in particular.

Connect the three power supply wires directly to the corresponding terminals of the circuit breaker, with the earth wire (green/yellow) directly on the earth terminal intended for this purpose.

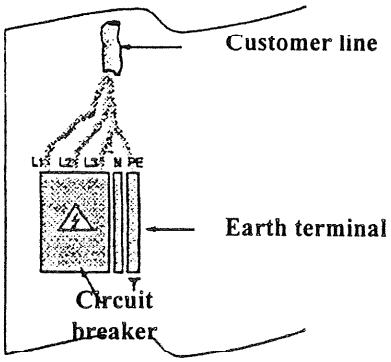

The circuit breaker is designed to accommodate up to three padlocks. We recommend that you install a padlock immediately, to prevent the system being switched on until the Amada Metrecs technician arrives to put your machine into operation.

CAUTION: All work on electrical installations must be performed by qualified personnel trained for the purpose in order to prevent any accidents or damage to equipment.

LAPIS SERVICES INC
(219)-464-9131
AUTHORIZED CNC SYSTEM INTEGRATOR
FANUC
Amada Support, Rebuilds,
Sales and Fanuc Control Upgrade

2.5. SAFETY PRECAUTIONS

2.5.1. GENERAL POINTS

During machine installation, operation, and maintenance, apply all necessary safety measures, and the following in particular:

- Do not adjust or service the machine until you have read the manual.
- All electrical work must be performed by a qualified electrician, to avoid all equipment damage or physical injury.
- Never place your hands between tools for any reason.
- Do not modify the control circuits or any component of the machine.
- Never use the machine with any of its safety devices removed or disabled.
- Do not enter the safety devices or the hazardous area.
- Inspect the machine daily before starting work, ensuring that:
  - All protective devices are in place.
  - The free space between the tools is not obstructed.
  - The access area for the various devices is clear.
  - The floor around the machine is free of grease, oil, and water.
- Never wear a tie, scarf, or loose clothing when adjusting or operating a press brake.
- Make it a rule that a single qualified, trained operator performs machine adjustments. When working on large parts, the operator may be helped by an assistant operator whose sole task is to help handle the blank. The assistant must have a control panel, electric footswitch, or two-hand control to authorise the operator to start the cycle.
- Before machine inspection or maintenance, switch off the main electrical isolating switch unless power is required for the procedure concerned. In such cases, only personnel with the appropriate training are authorised to carry out the procedure.
- Wear protective gloves whenever possible.
- On rare occasions when the user bends parts whose overall size exceeds the length of the machine's beam, protective measures must be implemented to prevent injury to other persons. If this type of job is performed frequently, additional protective measures must be permanently installed, in association with the machine's control circuit where appropriate.

LAPIS SERVICES INC
(219)-464-9131
AUTHORIZED CNC SYSTEM INTEGRATOR
FANUC
Amada Support, Rebuilds, Sales and Fanuc Control Upgrade

CAUTION: The machine may not be used in an explosive environment.

The operation and maintenance of this machine are strictly reserved to professional, qualified personnel.
For this purpose, Amada Metrecs provides training for operators, set-up men, programmers, and maintenance technicians on its own premises or on the customer site.

- Fire Prevention & Emission of Harmful Substances
  HFB press brakes present a low risk of fire or emission of harmful substances. Nonetheless, as a precaution (and in accordance with EN 292.2 Article 5.5.1), we recommend that you keep fire extinguishers for electrical equipment and oil near the machine.

- Ensure that the strength and length of the tools used are compatible with the pressure setting (see Para. 2.7, *Characteristics*, and Para. 5.5).

Press brakes are supplied with the following safety equipment:

- Two-hand control unit with emergency stop button,
- A set of two footswitches (close/open),
- Cycle selector key switch,
- Automatically controlled side and rear guards,
- Self-controlled electrohydraulic circuit.

Options: 1) Light guard to protect the front area, installed on goose neck protective devices; able to present the guard vertically (for work on small parts), or horizontally (for work on parts with lateral return bends).

2) Control unit for assistant operator, including two-hand control console and emergency stop, and movement enabling footswitch, on machines more than 3200 mm long.

LAPIS SERVICES INC
(219)-464-9131
AUTHORIZED CNC SYSTEM INTEGRATOR FANUC
Amada Support, Rebuilds,
Sales and Fanuc Control Upgrade

The press brakes listed in Appendix IV of Machine Directive 98/37 have fulfilled the requirements of the CE Type Testing procedure, as certified by the AIF, a notified body registered with the European Community by the French Ministry of Labour.
Each machine is therefore accompanied by a CE declaration of conformity like the following example:

DECLARATION OF CONFORMITY CE
RELATING TO WORK EQUIPMENT

****

The undersigned manufacturer
AMADA Europe SA,
96 avenue de la Pyramide, ZI Paris Nord II
93290 TREMBLAY EN FRANCE
(FRANCE)

declares that the new material named below: Hydraulic Press Brake

Type: ***HFB low tonnage*** CE
Model:
Serial No.:
Year of Manufacture:

complies with the regulations applicable to it:
- **European References:**
  - Directive 98/37/CE dated 22 June 1998 (Note: This Directive cancels and fully replaces the provisions of Machine Directive 89/392/CEE modified by Directives 91/368/CEE, 93/44/CEE, and 93/68/CEE.
  - EMC Directive 89/336/CEE modified by Directive 93/68/CEE.
- **French Reference:** Labour Law: Regulatory part. Appendix I of Book II (Part 2: decrees decided by Council of State).

Machine design and manufacture based on French regulatory data.

"The AIF/S*, Notified Body by act of the French Labour Ministry, dated 11/08/1992, has granted a CE type test certificate for the HFB series type, under Number……".
"The L.C.I.E.**, Qualified Body according to the Commission of European Communities, inspected the specimen from the HFB series on the 21 and 22/08/1995.
Certificate of Conformity No…… was issued on (date) ……..".

At *CHÂTEAU-DU-LOIR* Name
Date Title *Site Manager*
Signature

(*) AIF/Services, rue Stuart-Mill, ZI MAGRE – BP 308 – 87008 LIMOGES CEDEX
(**) LCIE – 33 avenue du Général Leclerc – 92260 FONTENAY-AUX-ROSES

JAPIS SERVICES INC
(219)-464-9131
Amada Support, Rebuilds, Sales and Fanuc Control Upgrade
AUTHORIZED CNC SYSTEM INTEGRATOR FANUC

2.5.2. MARKING

Compliance with the CE Type Test is indicated by adding the CE compliance marking to the manufacturer identification plate, as shown below:

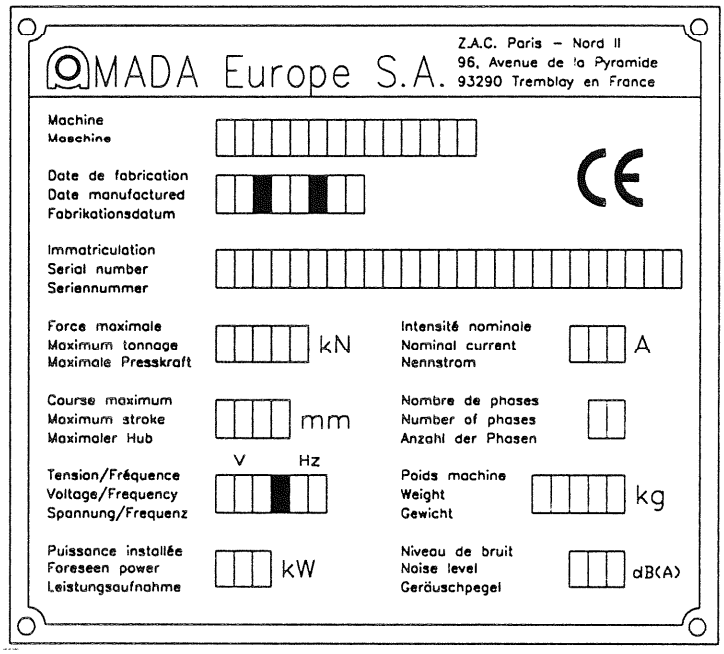

2.5.3. PERIODIC MAINTENANCE (applies to France only)

LAPIS SERVICES INC
(219)-464-9131

Article R233.11 of the labour law and the Act dated 5 March 1993, modified by the Act dated 4 June 1993, require preventive maintenance to be performed on a quarterly basis. The purpose of this regular servicing is to detect any fault liable to cause an accident in advance, so that such faults can be rectified.

The results of this service call are recorded in a safety register opened by the Site Manager and made available to the Health and Safety Executive and the CHSCT (if any) at all times.

This measure applies to any manual-feed press working on cold metals. The servicing must be performed under the responsibility of the Site Manager by qualified persons trained in risk prevention. A list of such personnel is made available to the Health and Safety Executive.

Amada Support, Rebuilds,
Sales and Fanuc Control Upgrade
AUTHORIZED CNC SYSTEM INTEGRATOR
FANUC

2.5.4. ARRANGEMENT OF WORKSTATIONS

There are five separate workstations for the following functions:

- Start-up ①
- Adjusting the back gauge ②
- Programming ③
- Production ④
- Assistant Operator ⑤ in the event of production with two operators.

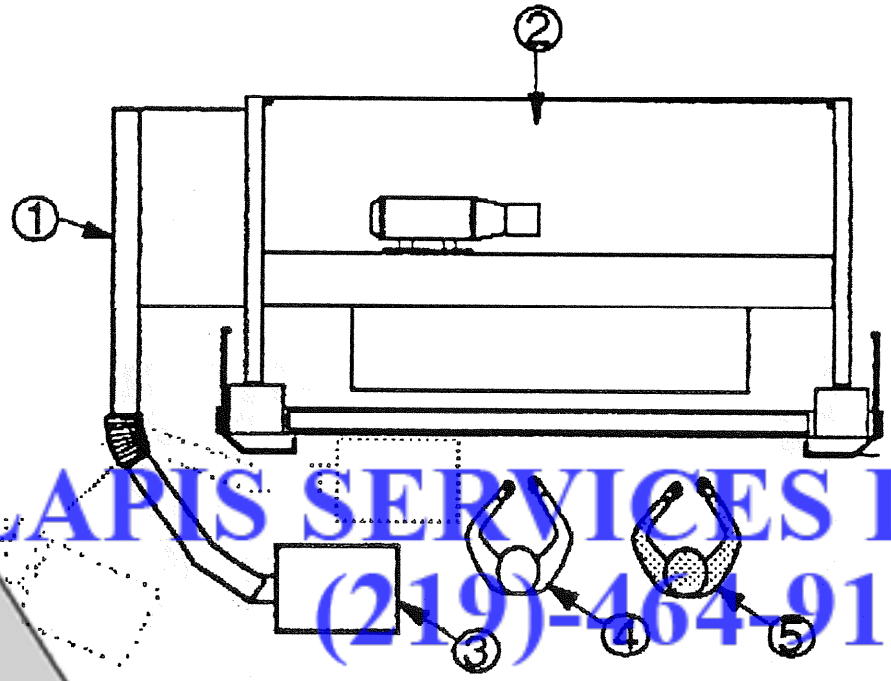

LAPIS SERVICES INC
(219)-464-9131
AUTHORIZED CNC SYSTEM INTEGRATOR
FANUC
Amada Support, Rebuilds,
Sales and Fanuc Control Upgrade

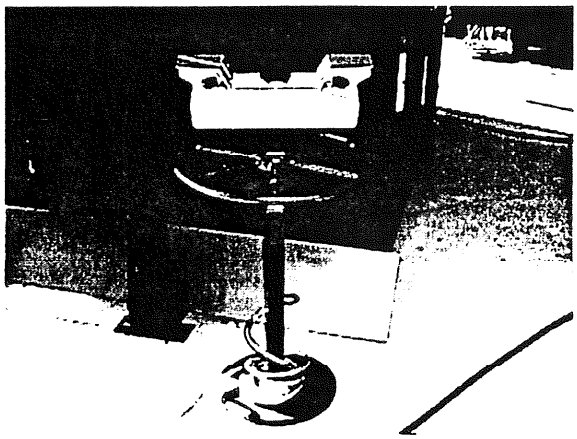

Figure 2.10

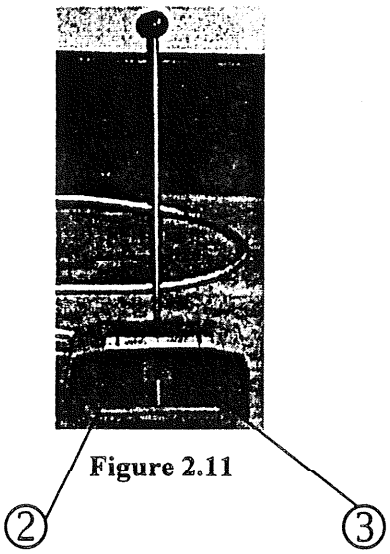

Figure 2.11

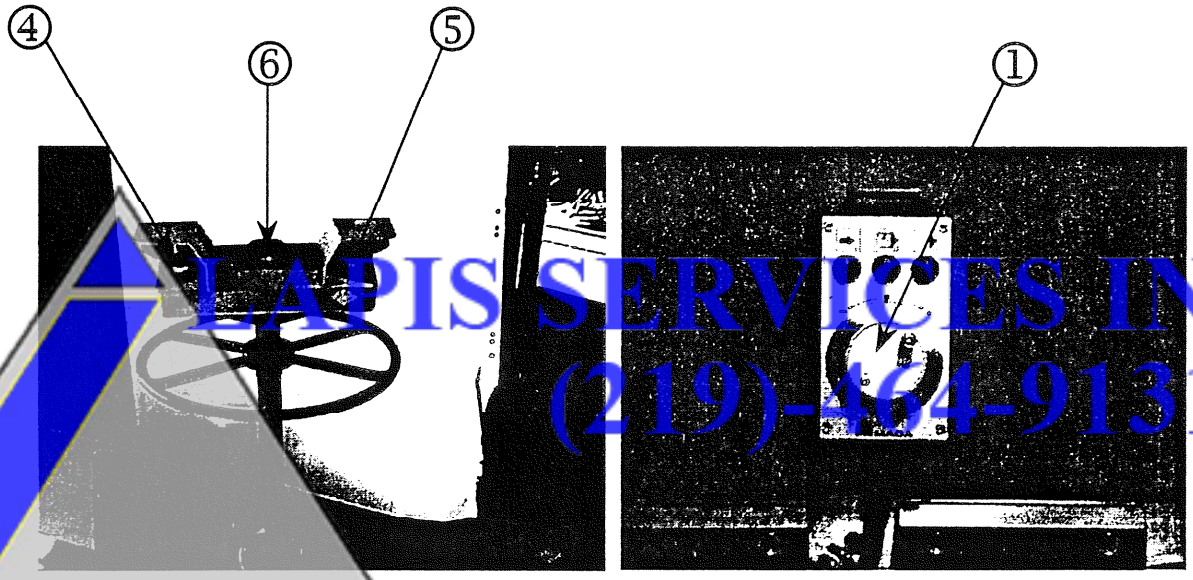

LAPIS SERVICES INC
(219)-464-9131
AUTHORIZED CNC SYSTEM INTEGRATOR
FANUC
Amada Support, Rebuilds,
Sales and Fanuc Control Upgrade

2.5.5. CONTROL DEVICES

The press brake is supplied with a two-hand control unit on a support, with a circle to prevent the operator from entering the hazardous area (Fig. 2.10).

This control unit comprises:

- Two pushbuttons ④ and ⑤ with simultaneous action and an anti-repetition device.
- One emergency stop button ⑥.

When the press is controlled by two operators, a second unit, identical to the first, is required. A key switch (option) is used to switch it on.
In all cases, the press brake is equipped with a footswitch to open the press ② and another to close it ③. This remote control also has a magnetic mobile electronic crank that can be moved ① (Fig. 2.11), used for training (see Programming Manual).

CAUTION: Ensure that the workstation has sufficient lighting for the parts to be worked on.

LAPIS SERVICES INC
(219)-464-9131

CAUTION: Working from the rear of the machine is strictly prohibited.

AUTHORIZED CNC SYSTEM INTEGRATOR FANUC
Amada Support, Rebuilds,
Sales and Fanuc Control Upgrade

EN VERTU DES DECRETS DE SECURITE, L'UTILISATION DE CETTE MACHINE PAR PLUS D'UN OPERATEUR EST INTERDITE EN L'ABSENCE DE BARRAGE IMMATERIEL.

Nous fournissons sur demande les équipements spéciaux pour le travail en 2 postes ou plus ou une option barrage immatériel.

IN THE ABSENCE OF A SAFETY LIGHT GUARD, CURRENT SAFETY REGULATIONS PROHIBIT THE OPERATION OF THIS MACHINE BY MORE THAN ONE PERSON.

We supply on request:
1) Special equipment to allow multiple bend set-ups.
2) Light guard option for operator safety.

ENTSPRECHEND DEN GELTENDEN SICHERHEITSVORSCHRIFTEN DARF DIESE MASCHINE, WENN SIE NICHT MIT EINEM SICHERHEITS-LICHTVORHANG AUSGERÜSTET IST, NICHT MIT MEHR ALS EINEM BEDIENER BETRIEBEN WERDEN.

Auf Anforderung können wir Ihnen spezielles Zubehör, weiche das arbeiten mit 2 oder mehreren Bedienern erlauben, oder einen Sicherheits-Lichtvorhang anbieten.

NE JAMAIS	Mettre les mains entre les outils, pendant le montage, réglage, production
NEVER	Put your hands between the tools when operating, setting or adjusting machine.
NIEMALS	Hände oder andere Körperteile zwischen die Werkzeuge bringen, während die Maschine arbeitet, eingerichtet oder gewartet wird.
JAMAIS	Entrer dans la zone de pliage tant que les mouvements de la butée arrière ne sont pas à l'arrêt.
NEVER	Enter the bending area until all back gauge movement has stopped.
NIEMALS	In den Werkzeugbereich greifen, solange sich irgendwelche Achsen bewegen.
JAMAIS	Changer les outils ou entretenir la machine avec le groupe hydraulique en marche.
NEVER	Replace punches and dies or service the machine with the hydraulic unit running.
NIEMALS	Stempel oder Matrizen wechseln oder Wartungen vornehmen, solange die Motoren laufen.

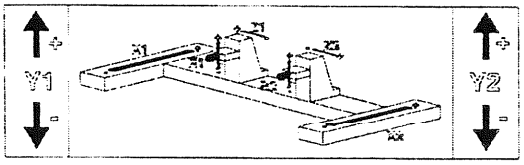

Plate for machine with light guard

TEMPS DE REPONSE TOTAL DU SYSTEME OVERALL SYSTEM RESPONSE TIME REAKTIONSZEIT	115	ms
DISTANCE MINI DE SECURITE MINIMUM SAFETY DISTANCE KLEINSTER SICHERHEITSABSTAND	360	mm
DIAMETRE DU BARREAU TEST TEST PIECE DIAMETER PRÜF STABDURCHMESSER	30	mm
LONGUEUR DU CHAMP PROTEGE LENGTH OF PROTECTED FIELD GRÖBTER LICHTSCHRANKEN ABSTAND	18	m (max.)

Plate for machine without light guard

TEMPS D'ARRET MACHINE STOPPING TIME NACHLAUFZEIT	60	ms
DISTANCE D'ARRET MACHINE STOPPING DISTANCE SICHERHEITSABSTAND	6	mm

LAPIS SERVICES INC
(219)-464-9131
AUTHORIZED CNC SYSTEM INTEGRATOR
FANUC
Amada Support, Rebuilds, Sales and Fanuc Control Upgrade

LAPIS SERVICES INC
(219)-464-9131

AUTHORIZED CNC SYSTEM
FANUC
INTEGRATOR

Amada Support, Rebuilds,
Sales and Fanuc Control Upgrade

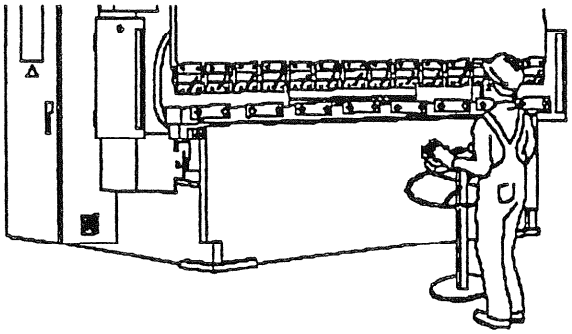

Figure 2.12

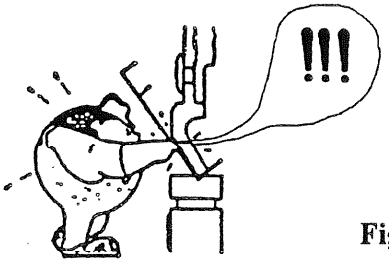

Figure 2.13

LAPIS SERVICES INC
(219)-464-9131

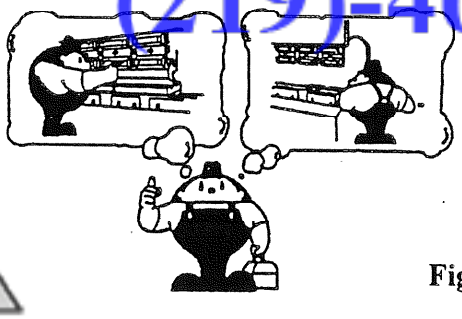

Figure 2.14

Amada Support, Rebuilds,
Sales and Fanuc Control Upgrade

2.5.6. RULES FOR SAFE OPERATION

- When bending small parts: if your machine is not equipped with a light guard (option), select Cycle 3 or Cycle 4, and use the two-hand control console (Fig. 2.12). If this is not possible, use pliers or any other tool or accessory that lets you keep your hands at a safe distance from the punch/die area.

- Release the part to be bent as soon as it is gripped between the tools (Fig. 2.13).

- Install or remove the stamps and tools in strict compliance with the procedure described in the Operator Manual (Fig. 2.14).

CAUTION: Handling devices for heavy parts are not included in the basic Amada supply.
They must be installed for risk-free use in accordance with ergonomic principles.

LAPIS SERVICES INC
(219)-464-9131
AUTHORIZED CNC SYSTEM INTEGRATOR FANUC
Amada Support, Rebuilds,
Sales and Fanuc Control Upgrade

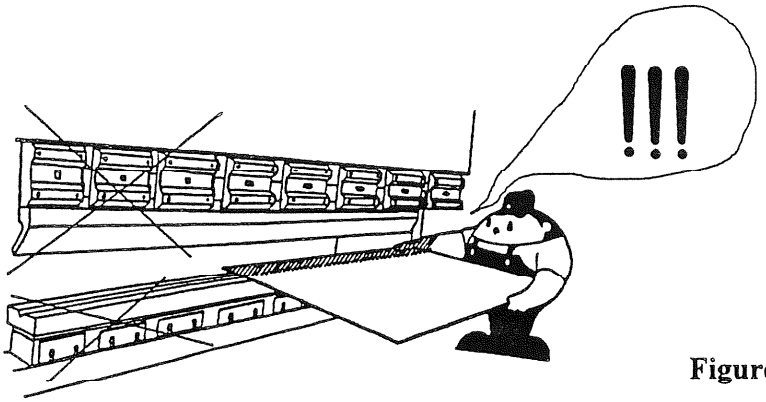

Figure 2.15

Figure 2.16

LAPIS SERVICES INC
(210)-464-9131

Figure 2.17

Amada Support, Rebuilds,
Sales and Fanuc Control Upgrade

- Never attempt to support the end of the worksheet by holding it on either side of the tools. Only install the tool length required for the current job on the machine (Fig. 2.15).

- Never place your hand between the worksheet and the back gauge during operation (Fig. 2.16).

- No part of your body must enter the hazardous area during bending operations (Fig. 2.17).

LAPIS SERVICES INC
(219)-464-9131
AUTHORIZED CNC SYSTEM INTEGRATOR
FANUC
Amada Support, Rebuilds,
Sales and Fanuc Control Upgrade

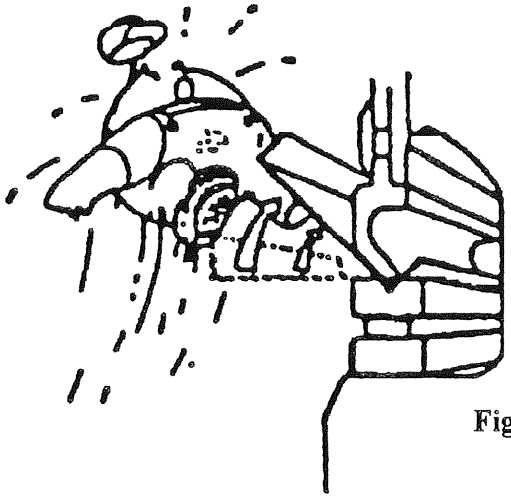

Figure 2.18

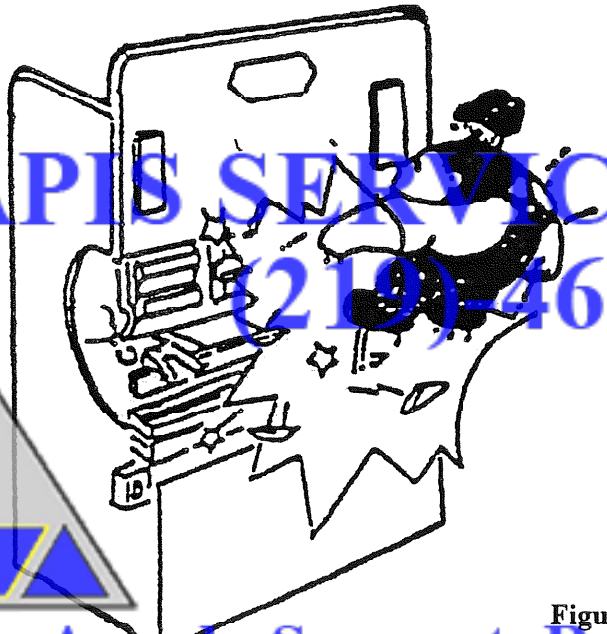

Figure 2.19

LAPIS SERVICES INC
(219) 464-9131
Amada Support, Rebuilds,
Sales and Fanuc Control Upgrade
AUTHORIZED CNC SYSTEM INTEGRATOR
FANUC

- Beware of sudden movements of the worksheet during bending (Fig. 2.18).

- Observe the allowable tool loads (Fig. 2.19 and Para. 5.5).

For example:
- 1.2 T/cm for standard punches, except:
- 1.5 T/cm for heavy punches,
- 0.5 T/cm for punches with extra thin blades.

(1 T = 10 kN)

The specific values for each tool type can be found in the special Tool catalogue (Amada or other).

LAPIS SERVICES INC
(219)-464-9131
AUTHORIZED CNC SYSTEM FANUC INTEGRATOR
Amada Support, Rebuilds,
Sales and Fanuc Control Upgrade

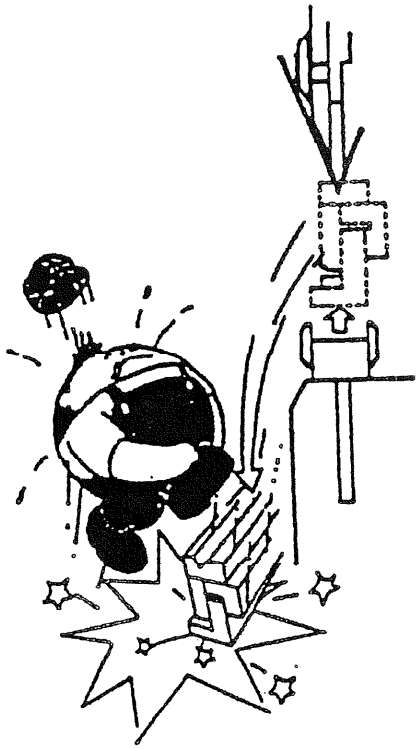

Figure 2.20

LAPIS SERVICES INC
(219)-464-9131
Amada Support, Rebuilds,
Sales and Fanuc Control Upgrade
AUTHORIZED CNC SYSTEM INTEGRATOR
FANUC

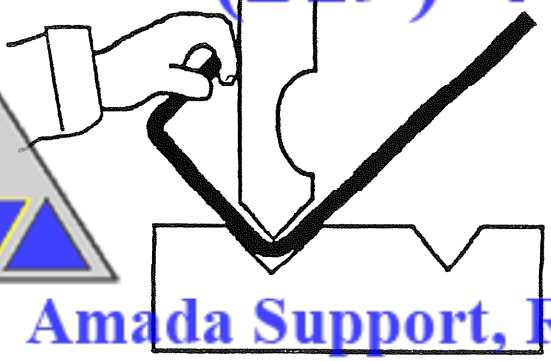

Figure 2.21

- The tool being set up must be firmly secured to the lower beam (Fig. 2.20).

- Never hold the sheet by its folded edge; hold it from the sides (Fig. 2.21).

LAPIS SERVICES INC
(219)-464-9131
Amada Support, Rebuilds,
Sales and Fanuc Control Upgrade
AUTHORIZED CNC SYSTEM INTEGRATOR FANUC

2.6. MACHINE OPERATING AND STORAGE CONDITIONS

To ensure long life for the electronic and hydraulic components, conditions should be maintained within the following limits:

	Min.	Max.
Ambient machine storage temp.	-10°C	+50°C
Ambient operating temp.	+5°C	+35°C
Oil temp.	+5°C	+80°C
Relative humidity	20%	75%

For temperatures below 5°C, the electronic cabinet must remain powered to keep the components and circuit at a normal temperature.
No equipment that produces swarf, dust, paint flakes, etc. must be installed in the immediate vicinity of the machine. If this is not possible, apply all possible measures to protect the press brake from all factors liable to hinder its smooth operation.

CAUTION: Amada Metrecs will put your machine into operation. Please provide a supply of test sheets for this purpose. Select the sheet material and thicknesses you use most often.
Any prior use will lead to suspension of the guarantee. Validity of the guarantee will not be restored until the installation has been inspected and, where necessary, the machine has been repaired at your expense.
Use of the machine by unqualified, untrained personnel engages the employer's liability (Labour Law L 233-5-1) as well as the operator's liability (Labour Law L 230-3). Applies to France only.

NOTE: To gain maximum benefit from our technician's visit, remember to remove the equipment from its crates and degrease it **before the technician's arrival.**

If the oil temperature is below 5°C, there is a risk of the machine operating incorrectly.
To prevent this, press the STOP button, and then press the opening footswitch for 5 to 10 minutes (see Para. 3.7).

LAPIS SERVICES INC
(219) 464-9131
Amada Support, Rebuilds, Sales and Fanuc Control Upgrade
AUTHORIZED CNC SYSTEM INTEGRATOR FANUC

2.7. MACHINE CHARACTERISTICS

DESCRIPTION	UNITS	HFB 50	HFB 80	HFB 100
Rated force	kN	500	800	1 000
Minimum force[i]	kN	50	90	90
Beam length	mm	2 090	2 550	3 110
Table width	mm	60	60	90
Work surface height	mm	960	960	960
Open height without tools	mm	470	470	470
Cylinder stroke	mm	200	200	200
Goose neck	mm	420	420	420
Distance between uprights	mm	1 670	2 130	2 710
Max. pressure	bar	270	275	280
Oil capacity[ii]	Litre	60/120	95/190	120/240
Number of cycles		4	4	4
Length (overall)[iii]	mm	2 640	3 100	3 680
Width (overall)[2]	mm	2 165	2 185	2 185
Height (overall)	mm	2 445	2 485	2 635
Total mass[iv]	kg	4 650 (weighed)	5 440 (weighed)	6 750 (estimated)
Average weight of gauge	kg	210	220	240
Number of adj. dist. pieces[v]		10/13	13/17	15/21
Height of distance pieces	Mm	120	120	120
Number of 835 mm tools		2	3	4
Number of 415 mm tools		1	-	-
Motor power (Europe)[vi]	kW	4.5	7.5	7.5
Pump capacity (Europe)	cm3/T	8.18	15.8	15.8
Motor power (USA)[4]	kW	4.8	6.6	9
Pump capacity (USA)	cm3/T	6.4	10.2	13.3
Max. approach speed[vii]	mm/s	100/<200	100/<200	100/200
Max. work speed	mm/s	10/20	10/20	10/20
Max. return speed	mm/s	100/200	100/200	100/200

AMADA EUROPE S.A. constantly strives to improve its products, and reserves the right to alter their characteristics at any time.

APIS SERVICES INC
(219)-464-9131
Amada Support, Rebuilds, Sales and Fanuc Control Upgrade
AUTHORIZED CNC SYSTEMS INTEGRATOR FANUC

---

[i] Value affecting the smallest allowable split tool (Para. 5.5).
[ii] Standard speed capacity/High speed capacity..
[iii] Overall lengths and widths apply to the machines in basic version.
[iv] Weights are approximate and correspond to bare machines without back gauge.
[v] Standard distance pieces/Routing distance pieces.
[vi] Machine power = Motor power + 1.5 KW.
[vii] Standard version/High speed version.

2.8. INFORMATION ON NOISE

The measurement methods used and the operating conditions comply with EN 31202 standards.

1 – EQUIVALENT ACOUSTIC PRESSURE LEVEL AT WORKSTATION LAeq: The equivalent continuous acoustic pressure level at the workstation, LAeq, is less than 70 dB(A).
2 – PEAK ACOUSTIC PRESSURE LEVEL AT WORKSTATION Lpc: The peak acoustic pressure level at the workstation, Lpc, is less than 130 dB

Measurements were taken 1 m from the front face, at the centre of the machine, at a height of 1.6 m.

LAPIS SERVICES INC
(219)-464-9131
AUTHORIZED CNC SYSTEM INTEGRATOR
FANUC
Amada Support, Rebuilds,
Sales and Fanuc Control Upgrade

2.9. NORMAL USE, RESERVATIONS, AND EXCLUSIONS

Normal Use

Bending and forming of sheet metals of various materials and thicknesses by inserting the blank to be machined in a punch/die device whose shape and size depend on the properties of the material.

Bending can be performed by one of the following methods:

- Air or three-point,
- Semi-coining
- Coining

In all cases, it is essential to observe the tool unit load limits.

Punching operations may also be performed using self-contained units, within the force limits specified in the Operator Manual. Special conditions for the installation of the units on the beams may be required. If so, such conditions are specified in the Operator Manual. In all cases, offcuts must be collected by an appropriate system, and no offcuts must enter the back gauge mechanism.

Reservations and Exclusions

Bending, forming, or punching of any material other than sheet metals, such as plastics (PVC, Makrolon, polycarbonate, etc.) in particular, should not be undertaken without consulting the supplier and checking the mechanical properties (ductility, strength, formability, etc.) of the product concerned.

LAPIS SERVICES INC
(219)-464-9131
AUTHORIZED CNC SYSTEM INTEGRATOR
FANUC
Amada Support, Rebuilds,
Sales and Fanuc Control Upgrade

LAPIS SERVICES INC
(219)-464-9131

Amada Support, Rebuilds,
Sales and Fanuc Control Upgrade

AUTHORIZED CNC SYSTEM
FANUC
INTEGRATOR

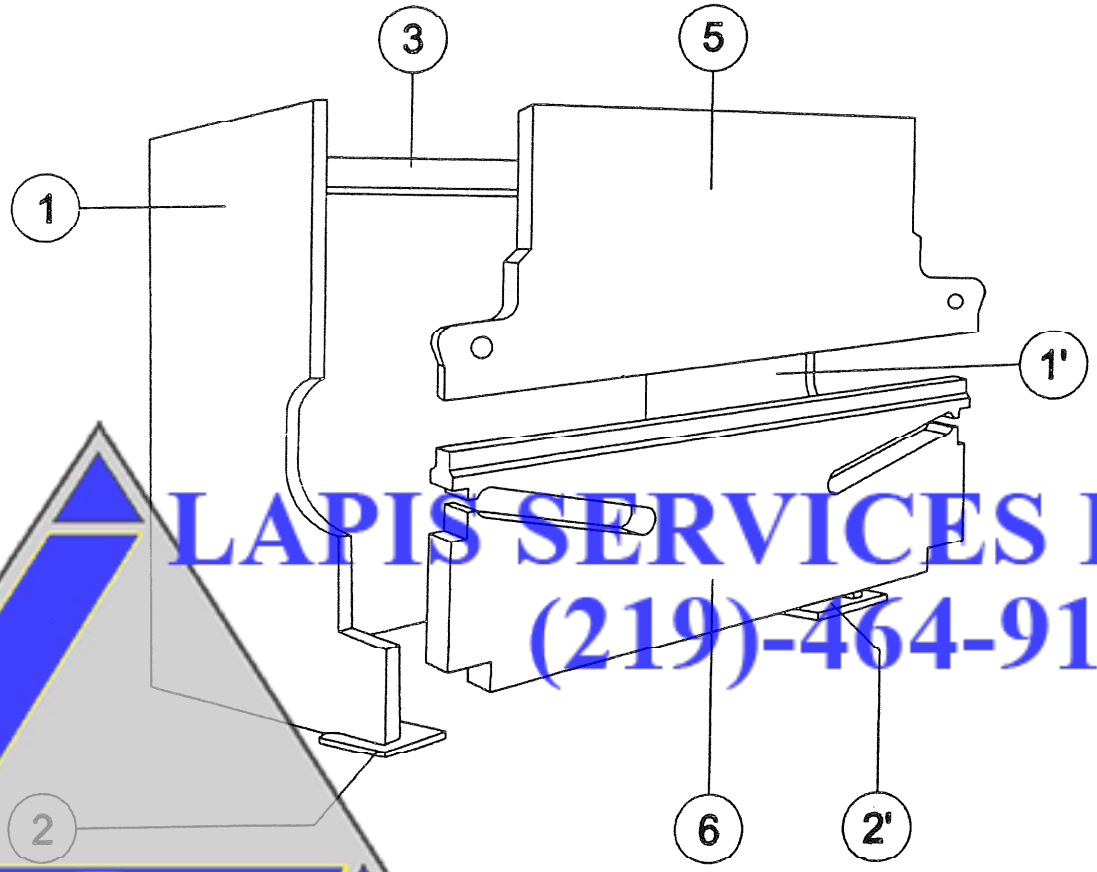

Figure 4.1

LAPIS SERVICES INC
(219)-464-9131
Amada Support, Rebuilds,
Sales and Fanuc Control Upgrade
AUTHORIZED CNC SYSTEM
FANUC
INTEGRATOR

3. COMMISSIONING

3.1. CLEANING

To gain maximum benefit from our technician's visit, we strongly recommend that you remove the equipment from its crates and degrease it before the technician arrives.
Use paraffin to remove the grease or storing polish, and oil the machined surfaces to prevent oxidation.

CAUTION: Never use abrasive products or solvents liable to damage surfaces with protective coatings.

3.2. INSTALLATION OF CONTROL DEVICES

The footswitch and control panel are supplied wired and connected. They are in a box secured to the back gauge.

CAUTION: Do not remove this box. Our technician will do so.

LAPIS SERVICES INC
(219)-464-9131
AUTHORIZED CNC SYSTEM INTEGRATOR FANUC
Amada Support, Rebuilds,
Sales and Fanuc Control Upgrade

IMPORTANT NOTE

AFTER LEVELLING, TIGHTEN THE TWO NUTS OF THE ADJUSTMENT SYSTEM ON BOTH THE UPRIGHTS.

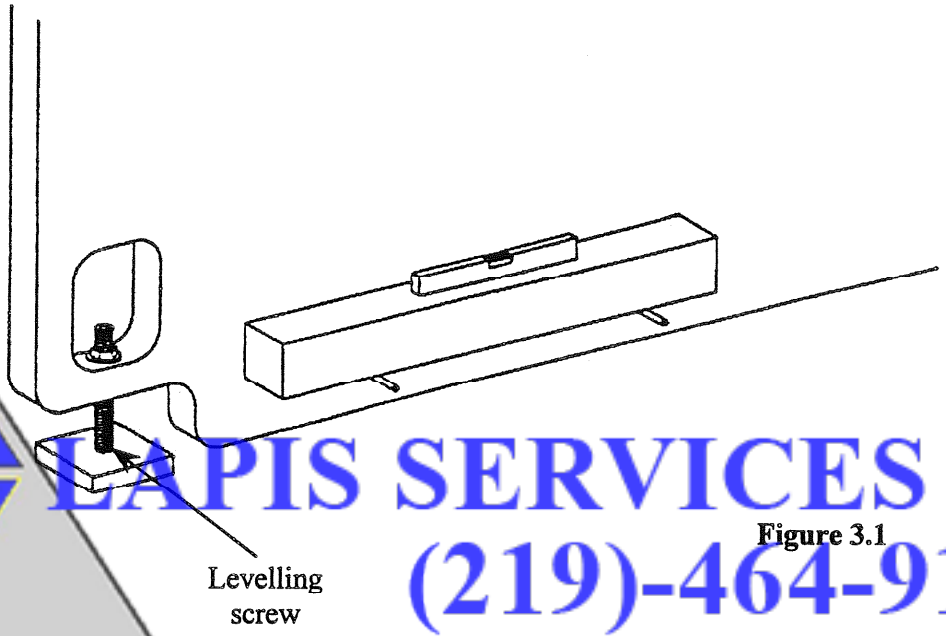

Figure 3.1

LAPIS SERVICES INC
(219)-464-9131
Amada Support, Rebuilds,
Sales and Fanuc Control Upgrade
AUTHORIZED CNC SYSTEM INTEGRATOR
FANUC

3.3. CHECKING THE MAINS POWER SUPPLY

As supplied, the machine is intended to run on a three-phase 400 V 50/60 Hz power supply. Any other voltage requires an autotransformer (not supplied).

3.4. MACHINE LEVELLING

To set your machine up with the correct geometry, apply the following procedure strictly.

Because your press is designed not to be anchored to the floor, the concrete slab must be flat to within 2 mm per metre.

Horizontal levelling does not require great accuracy; 1 mm per metre is sufficient.

The levelling of each upright is performed using each of the two screws at the rear of the machine (Fig. 3.1). The perpendicularity reference is taken with a frame level (*accurate to 0.05 mm/m*) placed on a straightened rule which is in turn resting on two gauges in each of the uprights. Tolerances: ±0.05 mm/m per upright, and 0.05 mm/m with respect to each other.

IMPORTANT NOTE

THE MACHINE MUST NOT REST ON SUPPORTS OTHER THAN THOSE DEFINED IN FIG. 2/4 PAGE 6 OF THIS MANUAL (CHAPTER 2).

For specific installation conditions, contact the Amada Metrecs Technical Department.

LAPIS SERVICES INC
(219)-464-9131
AUTHORIZED CNC SYSTEM INTEGRATOR FANUC
Amada Support, Rebuilds,
Sales and Fanuc Control Upgrade

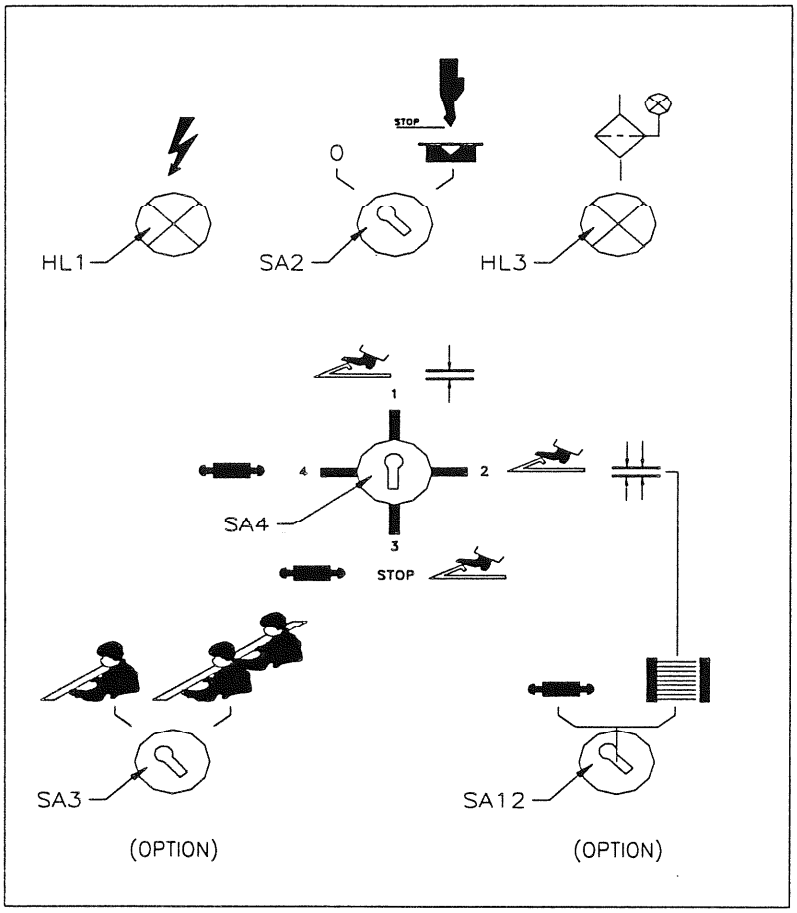

LAPIS SERVICES INC
(219)-464-9131

Amada Support, Rebuilds,
Sales and Fanuc Control Upgrade

3.5. PUTTING THE MACHINE INTO OPERATION

START-UP

❶ Turn the handle of the main circuit breaker to Position I.

❷ The white power indicator light lights up.

❸ Turn the motor start-up key switch to the right unstable position. The motor starts running.

❹ Turn the reset selector to the unstable position.

❺ The green indicator light lights up.

❻ At low ambient temperature, the oil becomes less fluid and the amber *filter clogging* alarm light may light up.
The alarm light goes off as soon as the oil temperature rises. If the alarm light remains lit, the filter is clogged.

DIRECTION OF ROTATION

- Check the direction of rotation of the hydraulic unit. To do this:
  - Start the pump by turning the selector to the right.
  - Compare the direction of rotation of the motor blades to the red arrow on the motor casing.
  - If the direction does not match, stop rotation by turning the selector to Position 0.
  - Remove power from the machine by switching ❶ to Position 0.

LAPIS SERVICES INC
(219)-464-9131
AUTHORIZED CNC SYSTEM INTEGRATOR FANUC
Amada Support, Rebuilds,
Sales and Fanuc Control Upgrade

3.6. OVERALL CHECK

- Check the mountings of all covers and casings.
- Check that no foreign body is present on the ball screws of the back gauge axles or the guide rails.
- Check that the cables are secure in the stuffing boxes (electrical power supply cable), and check the cable grip at the bottom of the cabinet (footswitch, console). In the electrical cabinet, check that the earthing wires are properly connected to the terminal blocks.
- Check that the limit switches are operating correctly.
- Check that no cover is liable to be caught during movement.
- Check all the indicator lights, and check that all emergency stops and key switches are operating correctly.
- Check that the light guard (if any) is operating correctly. Refer to the specific Appendix concerning the light guard.

WARM-UP

In the event of a low ambient temperature, it may be necessary to warm up the hydraulic circuit. Apply the following warm-up procedure:

1) Apply power to the machine, and start up the hydraulic unit.
2) When the NC Unit displays the main menu, press the opening footswitch for 5 to 10 minutes (Para. 2.6).

LAPIS SERVICES INC
(219)-464-9131
AUTHORIZED CNC SYSTEM INTEGRATOR FANUC
Amada Support, Rebuilds,
Sales and Fanuc Control Upgrade

LAPIS SERVICES INC
(219)-464-9131

AUTHORIZED CNC SYSTEM INTEGRATOR
FANUC

Amada Support, Rebuilds,
Sales and Fanuc Control Upgrade

4. TECHNICAL DESCRIPTION

4.1. MECHANICAL STRUCTURE

Comprising: (Fig. 4.1)

1) A welded frame, including:

   -Two uprights (*Items 1 and 1'*)
   -Two groundplates (*Items 2 and 2'*)
   -One connecting beam (*Item 3*)

2) Removable mechanical components:

   -One moving upper beam (*Item 5*)
   -One lower beam (*Item 6*)

LAPIS SERVICES INC
(219)-464-9131
AUTHORIZED CNC SYSTEM INTEGRATOR FANUC
Amada Support, Rebuilds,
Sales and Fanuc Control Upgrade

4.2. MECHANICAL CONNECTIONS

1) The upper beam is supported by the uprights via the two cylinders. Four track-eccentric roller assemblies guide the upper beam very well, and are used to provide axial adjustment.

   A linearity device with a push-pull system located at the rear of the upper beam ensures that this beam is perfectly linear, resulting in straight bends.

2) There are two cylinders. Their purpose is to transmit the required bending force to the upper beam, and to provide lateral guidance. The NC unit synchronises them via very high resolution linear scales to obtain parallelism and location accuracy to within 1/100 mm.

   The cylinder rods press on the upper beam via spherical supports.

   This linkage ensures that the piston is perfectly aligned in the cylinder by maintaining the reaction due to the thrust effects in the axis of the uprights.

3) The lower beam is welded to the machine uprights at each end.

4) The measurement goose necks are placed on the outer part of each upright. They have a dual purpose: mechanical compensation for the deformation of the lower beam, and opening the upright goose neck.

   They mechanically correct the opening between beams during deformation under pressure. The signal is sent to the cursor of the linear scale.

LAPIS SERVICES INC
(219)-464-9131
AUTHORIZED CNC SYSTEM INTEGRATOR
FANUC
Amada Support, Rebuilds,
Sales and Fanuc Control Upgrade

4.3. ELECTRONIC STROKE CONTROL AND PARALLELISM BALANCING SYSTEM

The clever design of the catches which are located exactly in the bending axis of the fixed and mobile beams allows the reference positions of the mobile beam to be read accurately, independently of the slightest deformation of the frame. The great rigidity of the false goose necks and the securing of the linear scales provide a reading to 1/100th of a millimetre, irrespective of the loads applied to the frame and the beams.

Extremely Accurate Incremental Measurement

The linear scale is made of glass and has a grid (40-µ steps). It represents the travel of the upper beam with positioning of ±0.01 mm between the punch and the die.

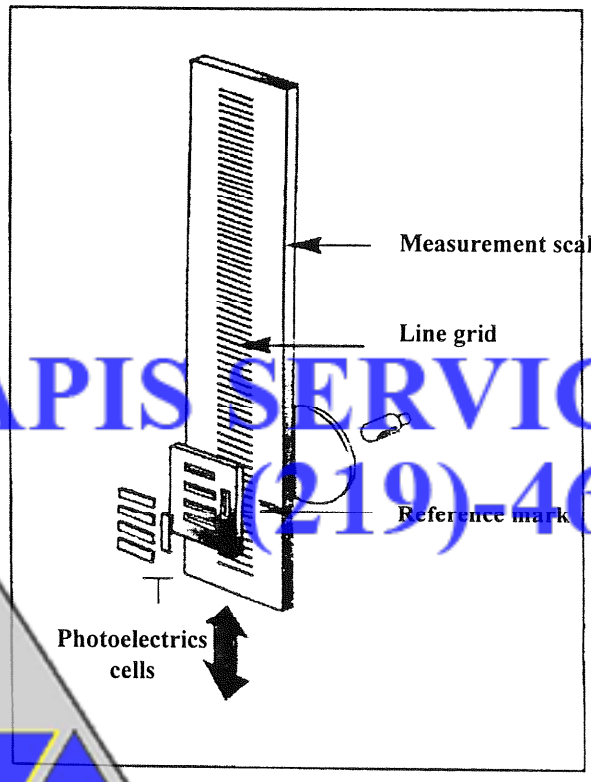

LAPIS SERVICES INC
(219)-464-9131
Amada Support, Rebuilds,
Sales and Fanuc Control Upgrade
AUTHORIZED CNC SYSTEM INTEGRATOR FANUC

4.3.1. ELIMINATING SOURCES OF ERROR

Under normal conditions of press brake use, several parameters have a direct effect on the accuracy of the bending angle.

- Oil viscosity (temperature).
- Operating pressure (working force).
- Position of the parts (if off-centre, this leads to unequal forces on the uprights).

Because it is virtually impossible to have full control over all these factors, risks of error are introduced, which are liable to affect the bending quality. A new technique allows Amada-Promecam to eliminate these risks completely.

4.3.2. PROPORTIONAL VALVE TECHNIQUE FOR CONTINUOUS RELIABILITY

This extremely sophisticated electronic regulating technique guarantees perfect balancing of the parallelism by making it independent of factors liable to alter it.

Two incremental linear sensors **Y1** and **Y2** are mounted at each end of the upper beam.
The sensors are directly connected to the electronics of the control cabinet for Machine **A**.

This controls the oil flow to each cylinder via proportional valves **B** and **B'**.

LAPIS SERVICES INC
(219)-464-9131
AUTHORIZED CNC SYSTEM INTEGRATOR
FANUC
Amada Support, Rebuilds,
Sales and Fanuc Control Upgrade

When the upper beam is lowered, the sensors continuously record the changing positions very accurately. These signals are immediately sent to the control console, which checks the respective values.

The slightest difference between the data supplied by the sensors automatically triggers oil level compensation and pressure balancing.

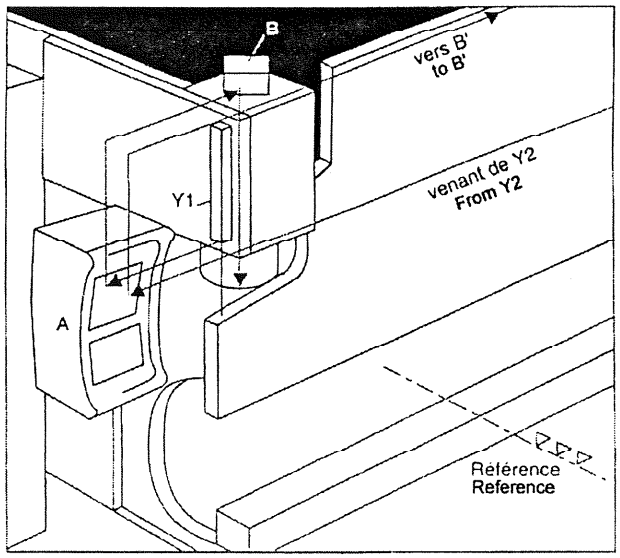

LAPIS SERVICES INC
(219)-464-9131
AUTHORIZED CNC SYSTEM INTEGRATOR
FANUC
Amada Support, Rebuilds,
Sales and Fanuc Control Upgrade

4.3.3. PRECISE CENTRING OF THE BEAMS

The upper beam is guided by a set of four pairs of generously sized cam-followers (1) running on hardened ground steel, securely fastened to the machine uprights.

The maximum spread between the upper and lower cam-followers (E max) ensures precise alignment and centring of the beams, with perfect rigidity. Reference cylinder **D** provides lateral positioning.

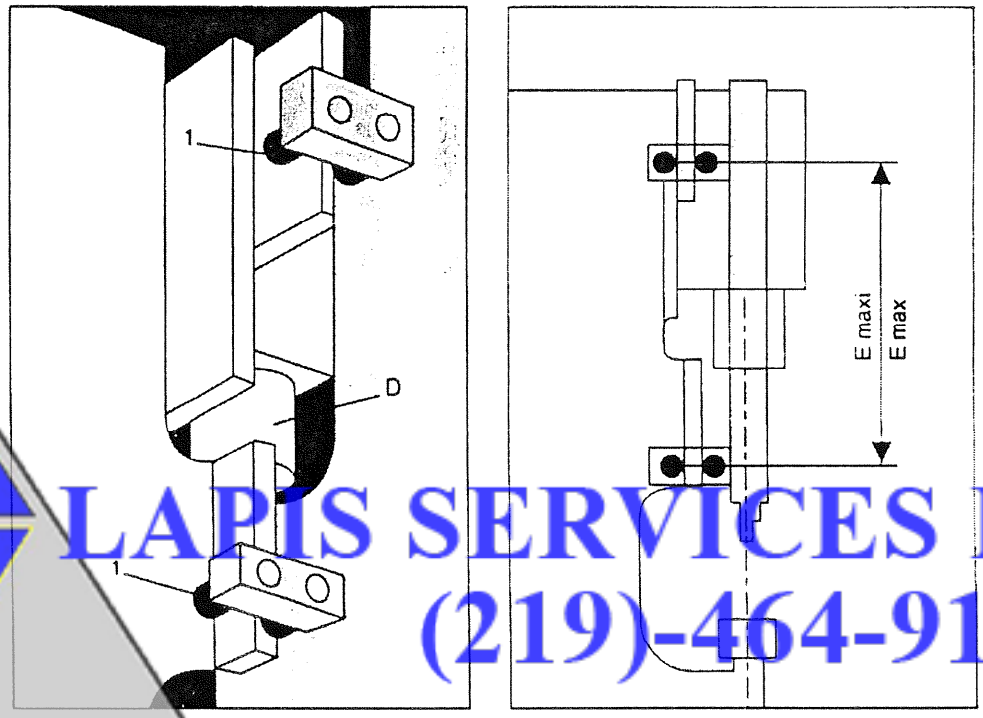

LAPIS SERVICES INC
(219)-464-9131
Amada Support, Rebuilds,
Sales and Fanuc Control Upgrade
AUTHORIZED CNC SYSTEM
FANUC
INTEGRATOR

LAPIS SERVICES INC
(219)-464-9131

AUTHORIZED CNC SYSTEM INTEGRATOR
FANUC

Amada Support, Rebuilds,
Sales and Fanuc Control Upgrade

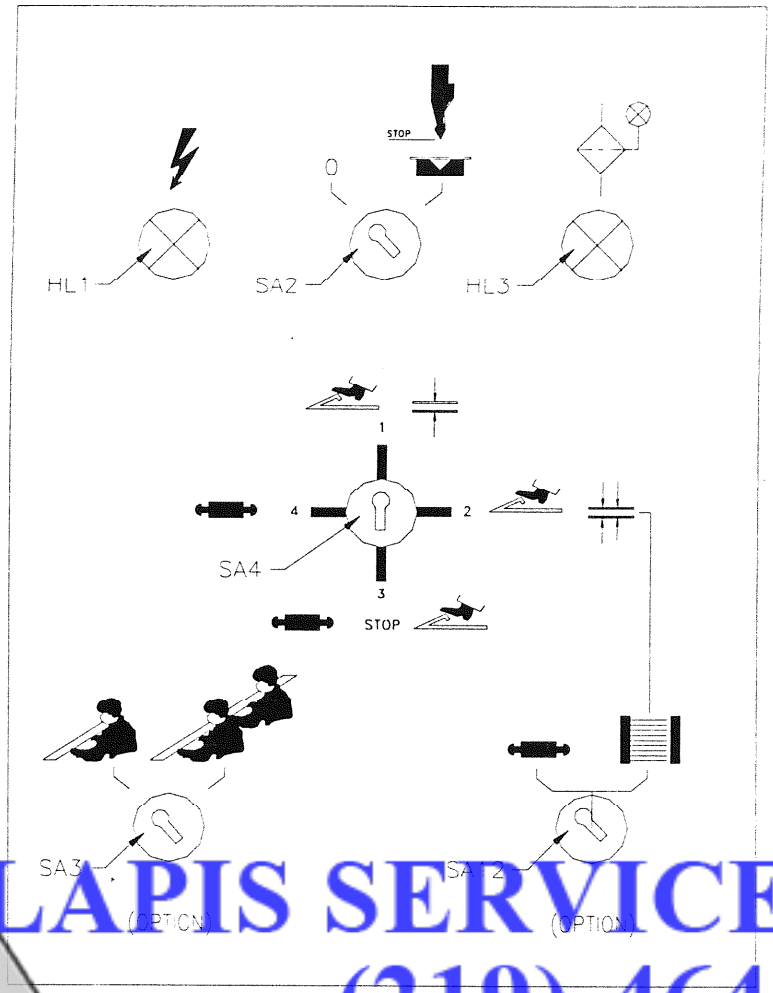

LAPIS SERVICES INC
(219)-464-9131

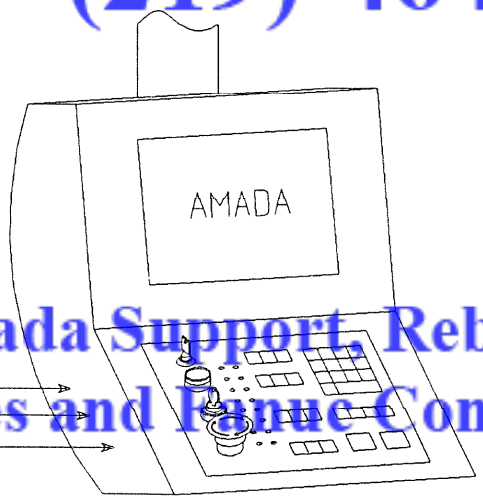

Amada Support, Rebuilds,
Sales and Fanuc Control Upgrade

4.4. LOCATION OF CONTROL AND SIGNALLING DEVICES

- **ON DOOR OF ELECTRICAL CABINET**

HL1: White power indicator light

HL3: Amber oil filter clogging indicator

SA2: Two-position STOP PLOT key switch
-1, without stopping at sequence point
-2, stopping at sequence point

SA3: Two-position key switch (Option)
-Single-operator control
-Two-operator control

SA4: Four-position CYCLE and CONTROL DEVICE key switch
-Manual setting
-Footswitch, and optional light guard protection (see Appendix E1)
-Two-hand control, stop, footswitch
-Two-hand control

- **ON NUMERICAL CONTROL CONSOLE**

SBL5: Green machine reset indicator light

SA1: Two-position + one unstable position Hydraulic Unit On/Off key switch
-0, Hydraulic unit off
-1, Hydraulic unit on
-2, Hydraulic unit start-up (unstable position)

SQ10: Machine stop.

LAPIS SERVICES INC
(219)-464-9131
AUTHORIZED CNC SYSTEM INTEGRATOR FANUC
Amada Support, Rebuilds,
Sales and Fanuc Control Upgrade

4.5. PRESS BRAKE OPERATING LIMITS IN OFF-CENTRE WORK

The further a point is from the centre of the machine, the smaller the available resultant force at that point. This information is taken into account by the NC unit, which calculates the force required according to the user-programmed part position.

4.6. PRESSURE GAUGE

A pressure gauge is placed on the NC unit support arm. By comparing the displayed pressure (in bars) to the maximum pressure given in the table on Page 2.7 - 35 in Chapter 2, you can see if the machine is reaching its operating limits.

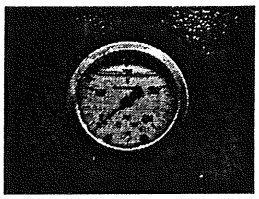

Pressure gauge

LAPIS SERVICES INC
(219)-464-9131
Amada Support, Rebuilds,
Sales and Fanuc Control Upgrade

The NC unit lets you limit the force according to the tool (refer to limit values in tool catalogues).

LAPIS SERVICES INC
(219)-464-9131

Amada Support, Rebuilds,
Sales and Fanuc Control Upgrade

AUTHORIZED CNC SYSTEM
FANUC
INTEGRATOR

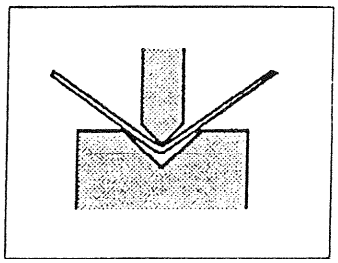

Figure 5.1

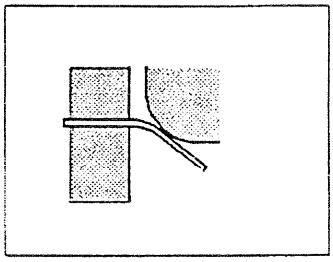

Figure 5.2

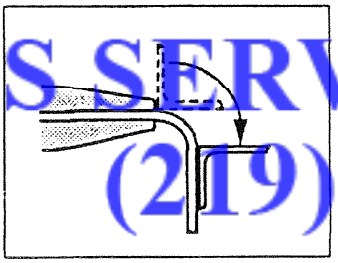

Figure 5.3

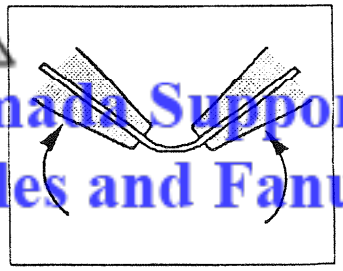

Figure 5.4

LAPIS SERVICES INC
(219)-464-9131
Amada Support, Rebuilds,
Sales and Fanuc Control Upgrade
AUTHORIZED CNC SYSTEM
FANUC
INTEGRATOR

5. FORMING TECHNIQUE & TOOLING

5.1. GENERAL POINTS

Bending consists of forming parts from sheets. Deformation is linear and simultaneous over the length of the part on a finite machine and tool, and continuous when rollers are used (infinite length).

Fig. 5.1: Punch and die. Press brake.

Fig. 5.2: Stripper plate and punch. Press. Tangent bending. Hole cutoff edge.

Fig. 5.3: Fixed stripper plate, rotating beam. Beam press brake.

Fig. 5.4: Rotating stripper plates.

LAPIS SERVICES INC
(219)-464-9131
AUTHORIZED CNC SYSTEM INTEGRATOR
FANUC
Amada Support, Rebuilds,
Sales and Fanuc Control Upgrade

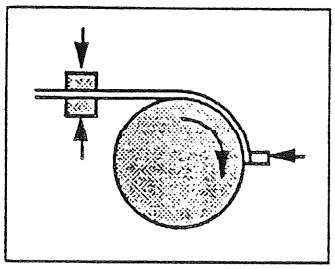

Figure 5.5

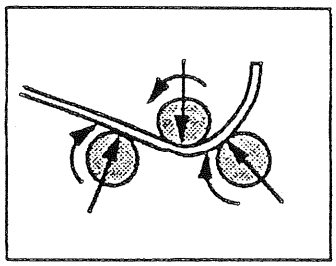

Figure 5.6

LAPIS SERVICES INC
(219)-464-9131

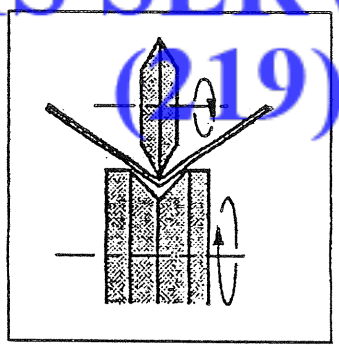

Figure 5.7

Amada Support, Rebuilds,
Sales and Fanuc Control Upgrade

Fig. 5.5: Fixed guide and rotating stripper plate. Manufacture of shrouds.

Fig. 5.6: Three rollers. Rolling machine.

Fig. 5.7: Flat roller. Infinite bending length. Angular variation limited to each pair of rollers.

This list of forming methods is not exhaustive. This chapter deals with punch-and-die bending (Fig. 5.1).

There are two basic bending techniques:

- AIR BENDING

Commonly performed because it requires relatively low bending forces.

- COINING

Requires forces equal to three to five times those of air bending. Allows the inside radius to be coined, which practically cancels out the elasticity of the metal.

LAPIS SERVICES INC
(219)-464-9131
AUTHORIZED CNC SYSTEM INTEGRATOR FANUC
Amada Support, Rebuilds,
Sales and Fanuc Control Upgrade

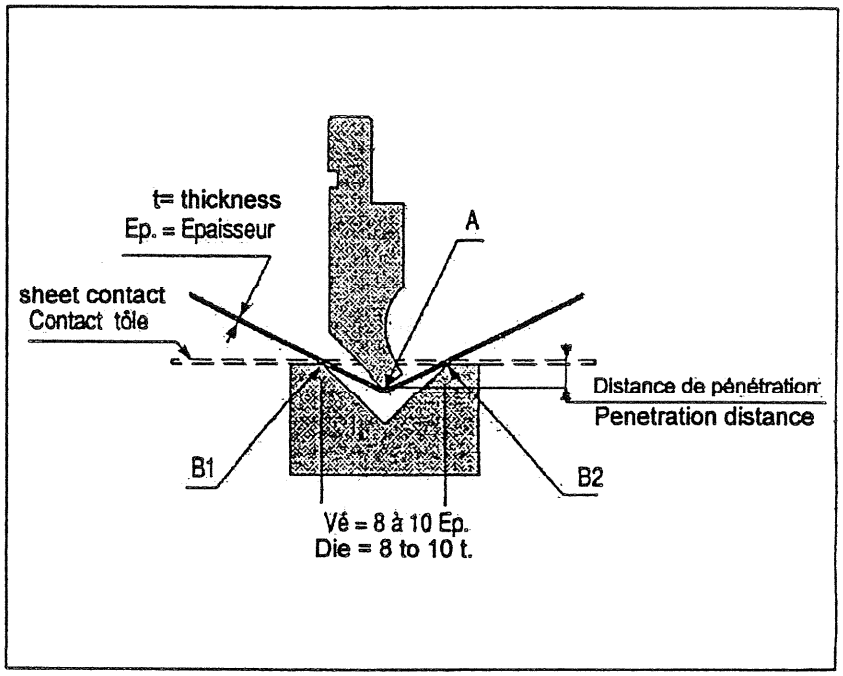

Figure 5.8

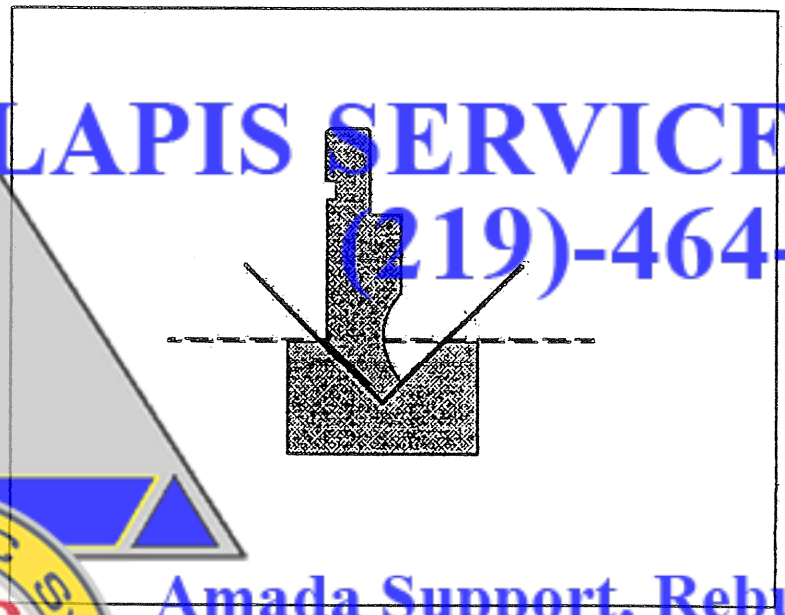

Figure 5.9

LAPIS SERVICES INC
(219)-464-9131
Amada Support, Rebuilds,
Sales and Fanuc Control Upgrade
AUTHORIZED CNC SYSTEM INTEGRATOR FANUC

5.2. AIR BENDING

During bending, the sheet keeps some of its elasticity. An angle more acute than the desired angle must therefore be produced to compensate for the opening due to this effect. The computer incorporates all the parameters required by air bending *(if the mobile beam is controlled by an NC unit)*. Our standard air bending tools are designed accordingly. The bending chart located on the press electrical cabinet gives the required forces and inside radii obtained according to the other characteristics *(thickness, die opening, etc.)*.

The sheet is in contact with the tools at three points (*A, B1, B2*) as shown on Figure 5.8. A necessary consequence of this for bending quality is: die = 8 to 10 times the sheet thickness. (*For angles ≥ 135°, preferably use a die = 10 to 12 times the sheet thickness*). Sheet deformation is interrupted before it reaches its penetration limit in the die.

NOTE

If there is a requirement for bending, edge dimension, inside radius, etc., use the technique for air bending to the bottom of the die, partial coining, or coining.

AIR BENDING AT BOTTOM OF DIE OR PARTIAL COINING (Fig. 5.9)

In this case, the sheet penetrates to the bottom of the die and is supported by the sides, with no increase in the bending force. This type of bending is seldom used because of the inaccuracy of the results obtained. Coining should be chosen over partial coining whenever possible.

LAPIS SERVICES INC
(219)-464-9131
AUTHORIZED CNC SYSTEM INTEGRATOR
FANUC
Amada Support, Rebuilds,
Sales and Fanuc Control Upgrade

5.3. COINING

This type of bending is comparable to stamping. The end of the punch penetrates the sheet at the bottom of the die, rupturing the elasticity of the sheet, which is then bent exactly to the shape of the punch.

- In practice, for a 90° bend:
  - Die width = 5 to 8 times the thickness.
  - Die angle = 90°.
  - Punch angle = 90°.

The state of the part is similar to that shown in Figure 5.9 for partial coining, except that the forces at the end of bending are 3 to 5 times the air bending forces, which causes the coining of the sheet.

NOTE

The choice of punch radius is very important, because it determines the inside radius of the bend *(stamping of the punch in the sheet).*

Coining can be performed with a punch and die of the same angular value only.

Very high bending forces must be applied; these may reach values from 3 to 5 times those shown on the air bending chart.

CAUTION: Because coining involves very high forces, take great care to check the strength of your tools. Never exceed the applicable force limits. These values depend on the type of tool, and should normally be shown in tool catalogues (Para. 5.5).

LAPIS SERVICES INC
(219)-464-9131
Amada Support, Rebuilds,
Sales and Fanuc Control Upgrade
AUTHORIZED CNC SYSTEM INTEGRATOR FANUC

5.4. LIST OF STANDARD TOOLS

Qualitative characteristics common to the whole range:

- Easy to store.
- Easy for one person to handle.
- Working parts specially treated.
- Standardised mounting systems.
- Special profiles suited to different sheet thicknesses.
- Wide range of profiles suited to all applications.
- Special custom-designed profiles for sufficiently large production runs.
- Rabbeting in the heel preventing the tool from dropping when the mounting brackets are unfastened.

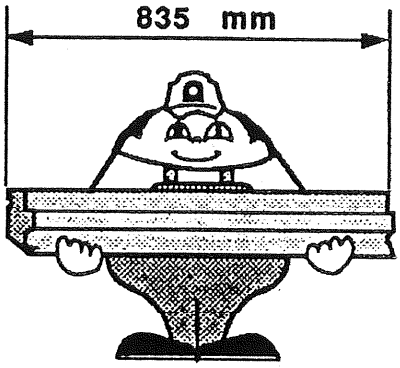

Our tools have two standard lengths: 835 mm and 415 mm. The punches are also split up into the following sizes, according to tool type:

• 400 mm	or	300 mm
• 200 mm with right horn		200 mm
• 100 m with left horn		100 mm with right horn
		100 mm with left horn
• 50 mm		50 mm
• 40 mm		40mm
• 20 mm		20 mm
• 15 mm		15 mm
• 10 mm		10 mm

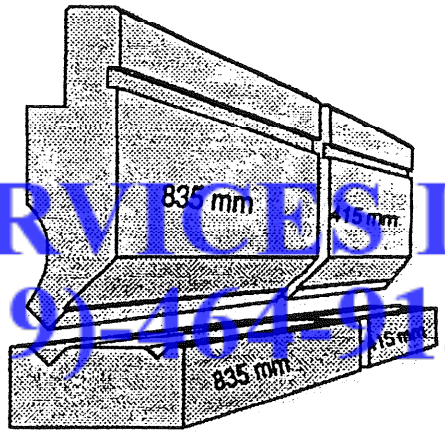

These split tools allow four-sided bending for items such as boxes, drawers, lockers, etc.

CAUTION. For any issues involving tools or bending materials other than sheet metals (list of range, profile, linear strength, etc.), please contact **AMADA METRECS**. A tooling specialist will analyse your specific problem. A simple telephone call will make your job easier and help you to work **in complete safety**.

LAPIS SERVICES INC
(219)-464-9131
Amada Support, Rebuilds,
Sales and Fanuc Control Upgrade
AUTHORIZED CNC SYSTEM INTEGRATOR
FANUC

The bending guide and the standard and high-quality tool price lists give you the complete list of available punches and dies.

During commissioning, our technician will enter a list of all your tools in your NC unit, and will show you how to input new tools yourself. You will then have the complete list of your punches and dies stored in the memory.

You must then identify them very carefully when using them to allow the NC unit to calculate the penetration from exact values. If for any reason the number were illegible on the tool, you could identify it by measuring the following parameters:

- Height (mm and hundredths)
- Tip radius
- Angle

and then identify it in the NC unit from these three values by scrolling through the list.

LAPIS SERVICES INC
(219)-464-9131
AUTHORIZED CNC SYSTEM FANUC INTEGRATOR
Amada Support, Rebuilds,
Sales and Fanuc Control Upgrade

LAPIS SERVICES INC
(219)-464-9131

Amada Support, Rebuilds,
Sales and Fanuc Control Upgrade

AUTHORIZED CNC SYSTEM INTEGRATOR
FANUC

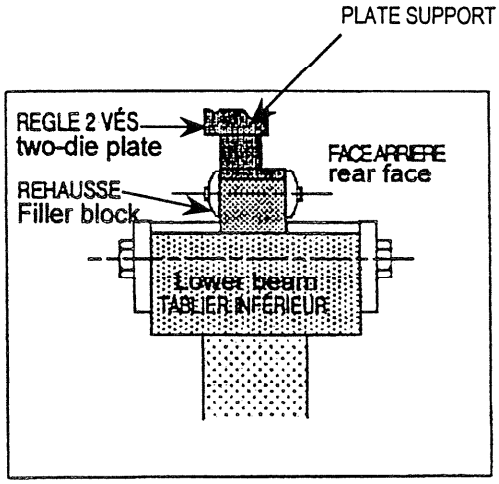

Figure 5.10

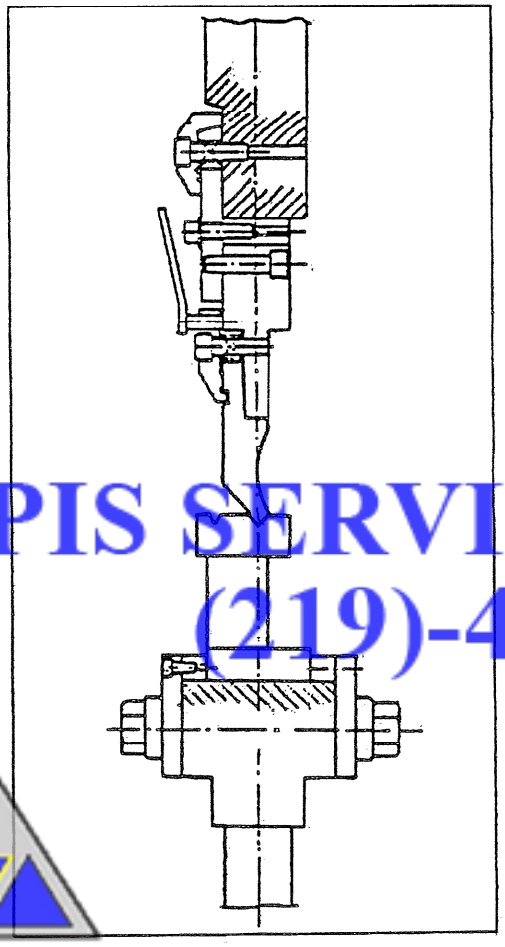

Figure 5.11

LAPIS SERVICES INC
(219)-464-9131
Amada Support, Rebuilds,
Sales and Fanuc Control Upgrade

5.5. TOOL INSTALLATION

CAUTION: Tool installation and removal procedures must be performed by trained personnel qualified for the job. Such procedures must be performed in Cycle 1, TOOL ADJUSTMENT MODE, which enables beam movement at low speed, and in accordance with the maximum load and minimum tool length restrictions.

PROCEDURE TO BE OBSERVED FOR TOOL INSTALLATION

Tool Installation (Fig. 5.10 and 5.11)

1) Place the lower part of the tooling in position, according to case:

- Filler blocks,
- Single-die plate,
- Two-die plate with plate support, which is slid onto the table of the lower beam.

2) Immobilise using the front brackets as shown in the diagram (Fig. 5.10).
The rear brackets must never be loosened because they provide the reference surface for tool alignment.

Note: In the event that plates requiring an alignment adjustment on the punches are used, check that the locking screws (Hm8) on the plate supports are loosened (13-mm spanner).

3) Select a program on the NC unit.

4) Go into sheet contact point LEARNING mode (see Appendix A: Operator Programming Manual 2). The use of this mode guarantees machine operation at minimum pressure.

5) Define the stacking value Y consisting of: lower tools + punch length + 3 mm (Fig. 5.11).

6) Issue an upper beam lowering order using the Closing footswitch and a clockwise rotation of the electronic crank together until the PCT value corresponding to Y is obtained.

LAPIS SERVICES INC
(219)-464-9131
AUTHORIZED CNC SYSTEM INTEGRATOR FANUC
Amada Support, Rebuilds,
Sales and Fanuc Control Upgrade

7) Release the Closing footswitch.

8) Press the emergency stop button.

9) Slide the lengths of the punches along the dies, and clamp them.

10) Reset the emergency stop: - Reset the control circuit (on electrical cabinet).
- Press the green START button on the NC unit.

11) Press the Closing footswitch and rotate the remote control vernier clockwise until the PCT values stop scrolling.

12) If using dies that require centring on the punch, tighten the screws (Hm8) using the 13-mm spanner whilst holding down the Closing footswitch.

13) Press the Opening footswitch to raise the upper beam.

The machine is now operational.

Special Cases

1) Grooved Punches

For punches that are machined with an additional fall-prevention groove, although the groove should ensure that the tool is secured, we recommend that you follow the above procedure for safety reasons.

2) Split Tools

When split tools are used, whether dies or punches, there is a risk of the settling force exceeding the tool strength. Each tool type has its own strength, which is given in sales catalogues.

Example:
Clear punch, four-part split lip:
- Maximum load withstood by tool: 11 T/M i.e. 110 KN
- Total length of split tool: 800 mm

In this case, the maximum force the tool can withstand is:
- Max. load withstood by tool (KN) x total tool length/1000
110 x 800/1000 = 88 KN, which produces the possibility of **DANGER**.

LAPIS SERVICES INC
(219) 464-9131
Amada Support, Rebuilds,
Sales and Fanuc Control Upgrade
AUTHORIZED CNC SYSTEM INTEGRATOR FANUC

Minimum force values for each type of machine:

HFB 50: 50 KN
HFB 80: 90 KN
HFB 100: 90 KN

The following formula is used to calculate the minimum length required to withstand the minimum force applied by the machine:
Minimum force of machine (KN) x 1000 / Maximum load withstood by tool (KN).

Example:
- Machine: HFB 80.25 (80 T, 2.5 m)
- Minimum force applied by this machine: 50 KN
- Minimum tool length: 50 x 1000 /110 = 454.55 rounded up to 455 mm (for tool splitting reasons)

and for an HFB 100.3, **an 800 mm split tool cannot be mounted to settle the tools.**

- The sizing and location of lateral guards on your machine take the maximum authorised tool length into account. This value is given in Para. 2.7 page 35/38 *(Bending Length)*, and repeated at the bottom of the *Number of Tools* table.
- Do not exceed these limits.

LAPIS SERVICES INC
(219)-464-9131
AUTHORIZED CNC SYSTEM INTEGRATOR FANUC
Amada Support, Rebuilds,
Sales and Fanuc Control Upgrade

Note

It is not technically correct to centre a long die length using a short punch length.

a) When bending with one or more short lengths of punch (< 835 mm) with a long die, apply the following procedure:

- Steps 1 to 10 of the procedure for identical long lengths, using a punch length identical to the die length.
- Loosen and remove the punch(es).
- Press the Opening pedal to raise the upper beam to top dead centre.

IMPORTANT NOTE

Because the rest of the procedure requires the set-up operator to place his hands between the tools, it is essential to ensure his safety by shutting off the hydraulic unit by switching the cabinet on/off switch to OFF and removing its key.

- Position the split punch(es) by laying them under the distance piece bearing surfaces.

b) When bending with a long punch length in one or more short die lengths:

Apply the procedure described in a), using a long die length to centre the plate support, and then remove this die length and replace with the split element(s).

LAPIS SERVICES INC
(219)-464-9131
AUTHORIZED CNC SYSTEM INTEGRATOR
FANUC
Amada Support, Rebuilds,
Sales and Fanuc Control Upgrade

TOOL REMOVAL PROCEDURE

- Bring the tip of the punch to about 3 mm from the bottom of the die (refer to installation procedure, Steps 1 to 7).
- Loosen the punches, and slide them out via one end of the beams.
- When all the punches have been removed, press the Opening footswitch to raise the upper beam.
- Remove the dies by loosening the mounting screws from the front brackets. The rear mounting brackets should not be removed if this can be avoided because they are used as a reference for alignment.

TOOL STORAGE

- To protect the cutting edges of your tools, we recommend that you store them in a specially-designed locker (Part No. F 93010) near your press brake, or lay them on wooden slats or other soft materials.
- Apply a film of oil to protect against corrosion.

TO INSTALL AND REMOVE TOOLS IN COMPLETE SAFETY, THE OPERATOR MUST APPLY THE ABOVE SAFETY RECOMMENDATIONS, AND MUST BE EQUIPPED WITH PROTECTIVE GLOVES AND APPROVED SAFETY SHOES.

LARIS SERVICES INC
(219)-464-9131

Labour law (Articles R231-72 and R234-6) restricts the authorised weight for **manual handling** to 55 kg for men and 25 kg for women.
Together, the Notified Bodies have harmonised these weight limits by setting both at 25 kg. Beyond this limit, personnel liable to perform such handling must receive appropriate training, and the items to be handled must be equipped with a device used to provide a handhold (special machining, tapped holes, etc.). The list of Amada tools with unit weight exceeding 25 kg is given on the following pages.

Amada Support, Rebuilds,
Sales and Fanuc Control Upgrade

SILHOUETTE	DESCRIPTION	PART No.	MASS OF ONE 835 mm ELEMENT
	88° punch, large clearance R = 0.8 H = 105 L = 835	K 4700.1	25
	90° punch, large clearance R = 0.6 H = 120 L = 835	K 4800.1	25
	One-die plate, 63 H = 75 L = 835	F 0063.1	29
	One-die plate, 80 H = 80 L = 835	F 0080.1	34
	One-die plate, 100 H = 95 L = 835	F 0100.1	46
	One-die plate, 125 H = 103 L = 835	F 0125.1	81
	One-die plate, 125 H = 103 L = 415	F 0125.2	35
	One-die plate, 160 H = 130 L = 835	F 0160.1	117
	One-die plate, 160 H = 130 L = 415	F 0160.2	52

LAPIS SERVICES INC
(219)-464-9131
AUTHORIZED CNC SYSTEM INTEGRATOR FANUC
Amada Support, Rebuilds,
Sales and Fanuc Control Upgrade

SILHOUETTE	DESCRIPTION	PART No.	MASS OF ONE 835 mm ELEMENT
	Adiprene container H = 95 L = 850	F 3004.1	46
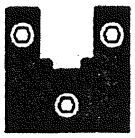	Adiprene container H = 95 L = 850	F 3005.1	57
	Adiprene container H = 95 L = 422	F 3005.2	28
	Radius table H = 38.5 L = 835	F 3002.1	45
	Punching table L = 835	F 4011.1	43
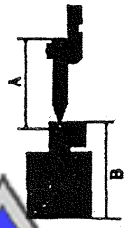	Hemming tool H A = 85 H B = 105 L = 835	F 3302.1	45

LAPIS SERVICES INC
(219)-464-9131
Amada Support, Rebuilds,
Sales and Fanuc Control Upgrade

5.6. SPECIAL ACCESSORIES

See Appendix E2.

LAPIS SERVICES INC
(219)-464-9131
Amada Support, Rebuilds,
Sales and Fanuc Control Upgrade

5.7. INSTALLATION AND ADJUSTMENT OF DISTANCE PIECES

A) Purpose

To allow fine adjustment of the line of tools to obtain minimum angular variance over the length of the bend under given conditions.

B) Purpose of Adjustment

The purpose of the adjustment is to compensate for differences in penetration between the punch and die. It is represented by the distance piece curve.

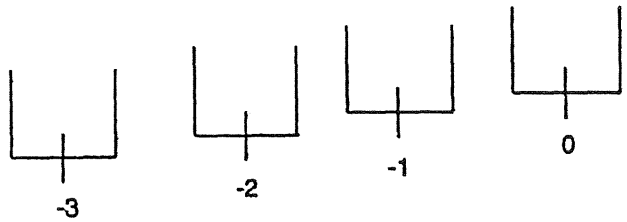

The various adjustment curves for a given machine have a similar overall appearance.

The amplitude of the values varies according to:

Type of material, mechanical properties (tensile strength).

Length and thickness of sheet to be bent (*the adjustable distance piece design lets you use all the tools in the Amada range*).

Note

The distance piece curve for Amada machines is factory-adjusted according to average values, and checked by the Amada technician during commissioning on the customer site.

LAPIS SERVICES INC
(219)-464-9131
AUTHORIZED CNC SYSTEM INTEGRATOR FANUC
Amada Support, Rebuilds,
Sales and Fanuc Control Upgrade

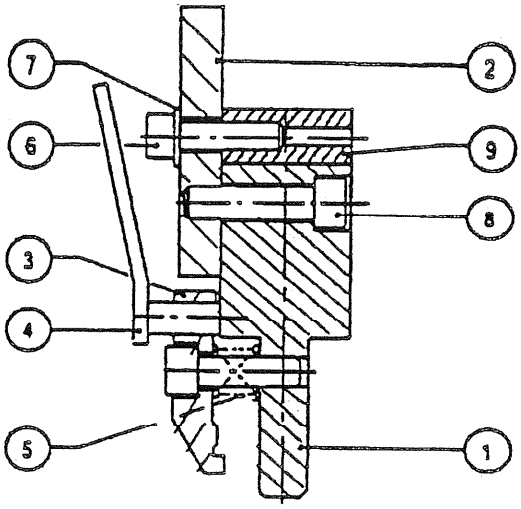

Figure 5.12

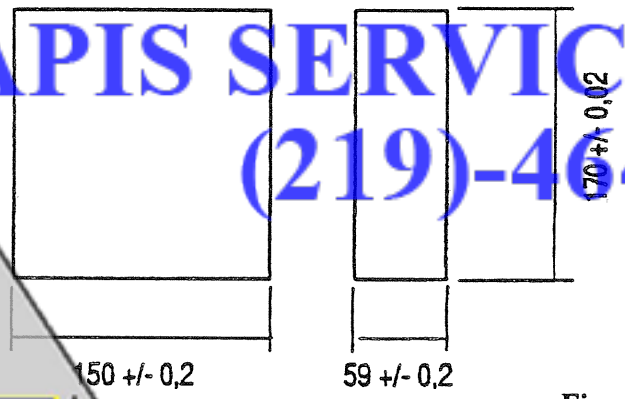

Figure 5.13

LAPIS SERVICES INC
(219)-464-9131
Amada Support, Rebuilds,
Sales and Fanuc Control Upgrade
AUTHORIZED CNC SYSTEM INTEGRATOR
FANUC

C) Adjustment

Preparation: On all distance pieces constituting the tool line.

Release the adjustment wedge by loosening the screw (Item 6) *(6-mm hex socket wrench).*
Slide the wedge, Item 9, to the bottom of the slot towards the right.
Slightly tighten the screw, Item 6, and then firmly tighten the tool spacer using the two screws, Item 8 *(8-mm hex socket wrench)* (see Fig. 5.12).

Settling the Distance Pieces

Either use two identical lengths of die + punch, or use two special parts to be manufactured according to Figure 5.13. These parts are moved at the same time and systematically for the settling of each pair of distance pieces.

- Set the press brake for a force of 20 tonnes.

- Settle the two end distance pieces at the same time, and then the next two, and so on. If only one remains at the centre of the press brake, it should be settled using a force of 10 tonnes.

LAPIS SERVICES INC
(219)-464-9131
AUTHORIZED CNC SYSTEM INTEGRATOR
FANUC
Amada Support, Rebuilds,
Sales and Fanuc Control Upgrade

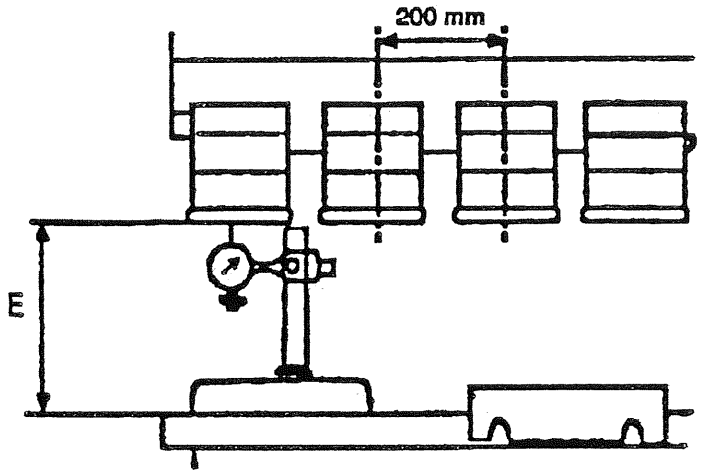

Figure 5.14

On leaving the factory, the distance pieces are set to zero for the entire range (HFB 50, 80, and 100).

Position of standard distance pieces.

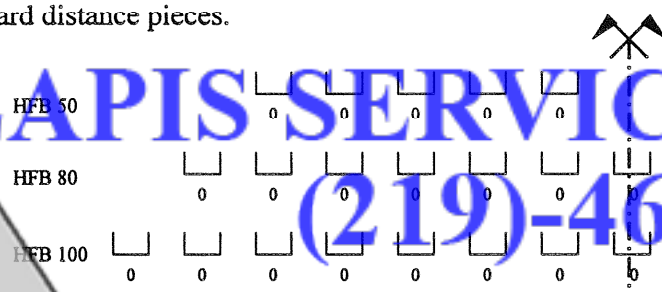

Figure 5.15

Position of abuting distance pieces.

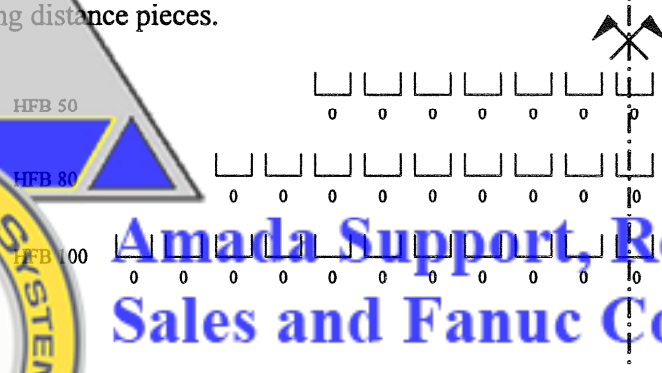

LAPIS SERVICES INC
(219)-464-9131
AUTHORIZED CNC SYSTEM INTEGRATOR
FANUC
Amada Support, Rebuilds,
Sales and Fanuc Control Upgrade

Adjusting dimension E using travel dial indicator:

Select the lowest distance piece, i.e. the one with the smallest distance E (Fig. 5.14). Immobilise its wedge using the 6-mm screw (Fig. 5.12).
Place the travel dial indicator on the lower beam, at the centre of the distance piece, and set the pointer to zero.

Adjust the other distance pieces:

- By reading the values from the curves (Fig. 5.15). These are average adjustment values according to the type of machine you have.

- By customising the adjustments according to the operating conditions and the results to be obtained.

LAPIS SERVICES INC
(219)-464-9131
Amada Support, Rebuilds,
Sales and Fanuc Control Upgrade
AUTHORIZED CNC SYSTEM INTEGRATOR
FANUC

5.8. PUNCHING

Your machine cannot be used for punching, notching, etc.

BENDING CHART

This chart was drawn up for steel with a fracture strength of 40 to 45 daN/mm². Using the chart, you can normally find the following information if the sheet thickness **e** and inside bending radius **ri** are known:

- Force (kN) per metre of bent length **f**
- Size of the smallest possible edge **b**
- Opening of the die to be used, **V**

Recommended die openings are shown in shaded boxes.

This opening, **V**, is related to the thickness **e** of the sheet to be bent. The recommended values are as follows:

For **e** ≤ 10 mm V = 8 **e**
Pour **e** ≥ 12 mm V = 10 **e**

If the recommended opening cannot be used (small edge cannot be created, tool not available, insufficient force, etc.), use a die with an opening that is near the recommended value, shown in the light boxes of the chart. This chart is also valid for the bending of other materials (e.g. stainless steel or aluminium); simply apply a correction factor to the values according to the ratio of the mechanical strengths.

Example: If the chart, based on 40 daN/ mm² steel, gives a force of 500 kN for a given bend, the force is 250 kN for the same bend on a 20 daN/mm² aluminium sheet.

LAPIS SERVICES INC
(219)-464-9131
Amada Support, Rebuilds, Sales and Fanuc Control Upgrade
AUTHORIZED CNC SYSTEM INTEGRATOR FANUC

Teinte de couleur, voir modèle existant
Colour, see existing model

orange = Largeur du V
Die width

gris grey = Rayon intérieur
Inside radius

vert green = Bord mini
Min. Edge

rouge red = Force de pliage kN/M
Bending force kN/m

bleu blue = Epaisseur de la tole
Sheet thickness

AMADA
PROMECAM

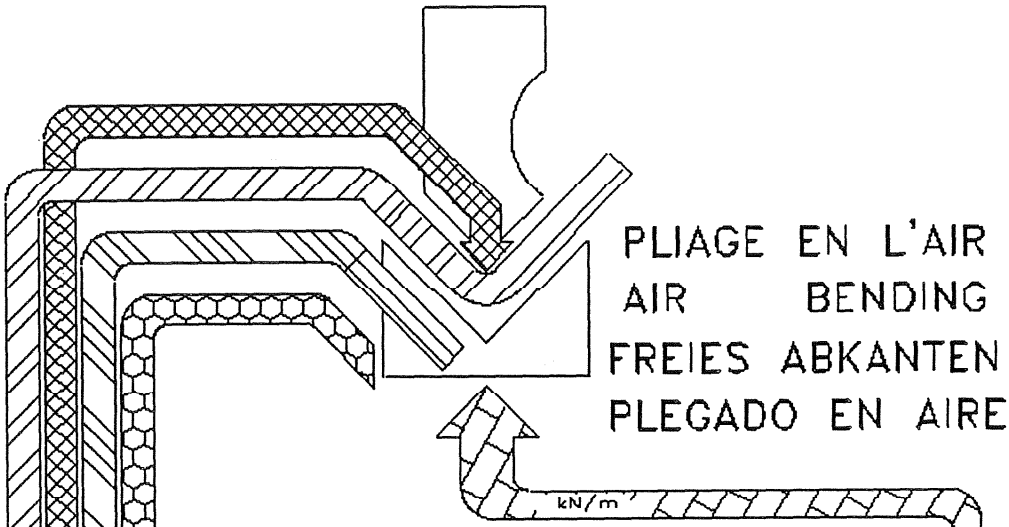

	6	8	10	12	16	20	25	32	40	50	63	80	100	125	160	200	250	320	400	500
	4	5.5	7	8,5	11	14	17.5	22	28	35	45	55	71	89	113	140	175	228	280	350
	1	1.3	1.8	2	2.6	3,3	4	5	6,5	8	10	13	16	20	26	33	41	53	65	83
0.6	40	40																		
0.8	70	50	40																	
1	110	80	70	60																
1.2	160	120	100	80	60															
1.5		170	150	130	90	80														
2			270	220	170	130	110													
2.5				350	260	210	170	130												
3					380	300	240	190	150											
4						540	420	340	270	210										
5							670	520	420	330	260									
6								750	600	480	380	300								
8									1070	850	680	530	430							
10										1340	1050	850	670	530						
12												1200	980	780	600					
15													1500	1200	950	750				
20														2150	1700	1350	1080	850		
25															2650	2100	1700	1300	1050	
30																3000	2400	1900	1500	1200
40																	3300	3100	2700	2150
50																		5250	4200	3400

LAPIS SERVICES INC
(219)-464-9131
Amada Support, Rebuilds,
Sales and Fanuc Control Upgrade
AUTHORIZED CNC SYSTEM INTEGRATOR
FANUC

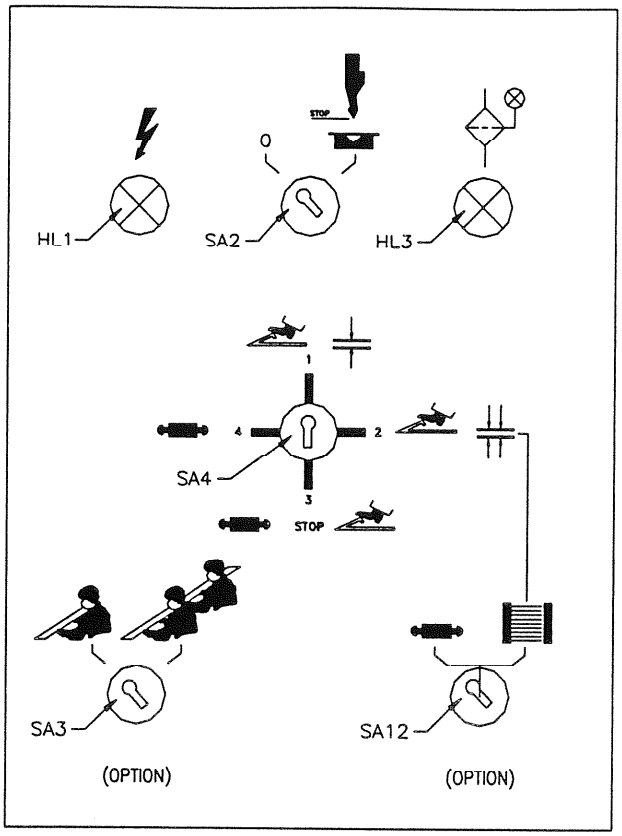

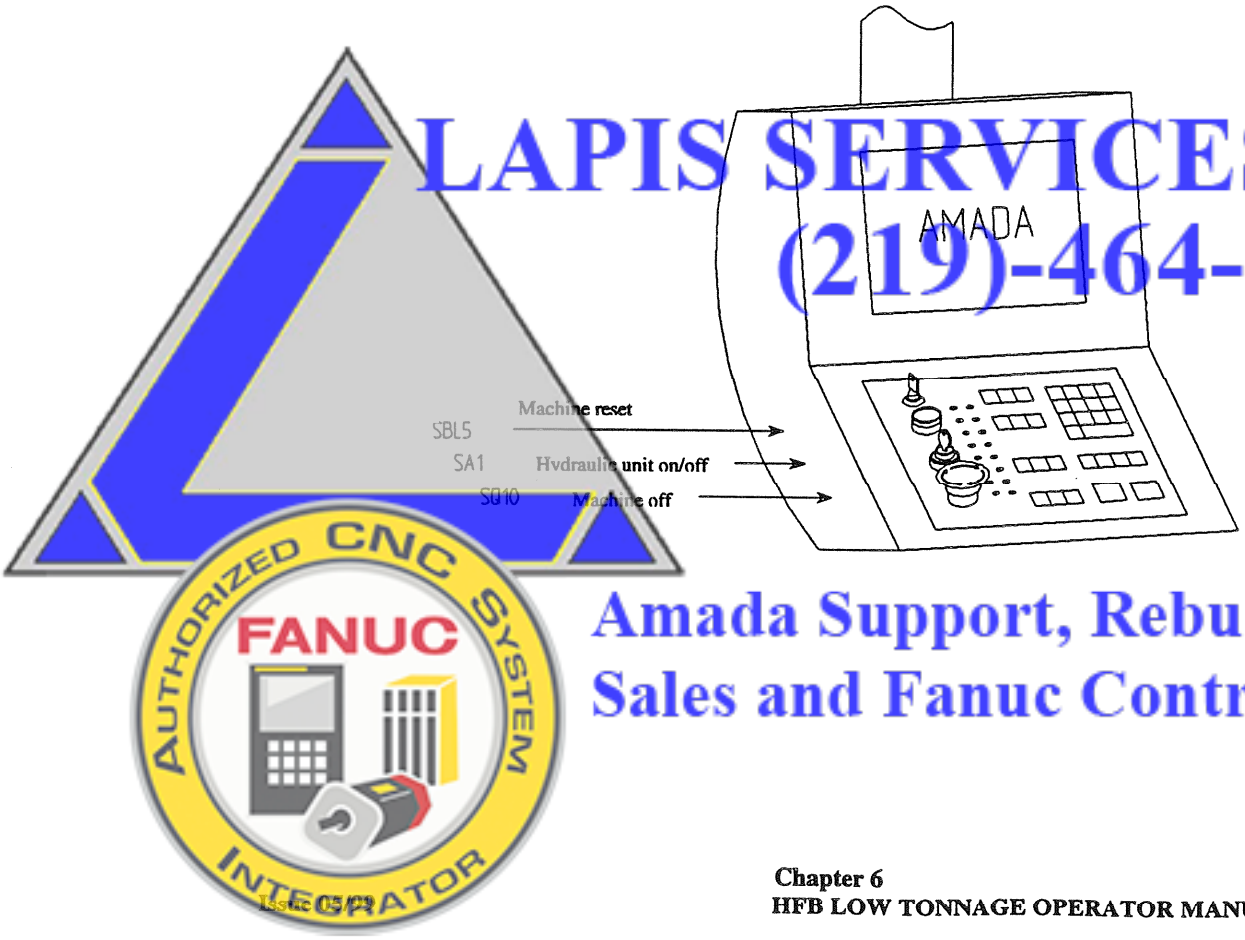

LAPIS SERVICES INC
(219)-464-9131
Amada Support, Rebuilds,
Sales and Fanuc Control Upgrade
AUTHORIZED CNC SYSTEM INTEGRATOR
FANUC

6. OPERATION

6.1. START-UP

❶ Turn the handle of the main circuit breaker to Position I.

❷ The white Power indicator light lights up.

❸ Turn the motor start-up key switch to the right unstable position. The motor starts running.

❹ Press the green luminous Reset pushbutton.

❺ The green indicator light lights up.

❻ At low ambient temperature, the oil becomes less fluid and the amber *filter clogging* alarm light may light up.
The alarm light goes off as soon as the oil temperature rises. If the alarm light remains lit, the filter is clogged.

- The NC unit lights up and is ready to be initialised.

LAPIS SERVICES INC
(219)-464-9131
AUTHORIZED CNC SYSTEM INTEGRATOR FANUC
Amada Support, Rebuilds,
Sales and Fanuc Control Upgrade

6.2. DESCRIPTION OF CYCLES

NOTE

The machine cycle depends on:

- The programming mode selection on the NC unit,
- The PS (safety point).
- Presence or absence of a light guard (see Appendix E1).

The Opening footswitch always overrides any other controls.

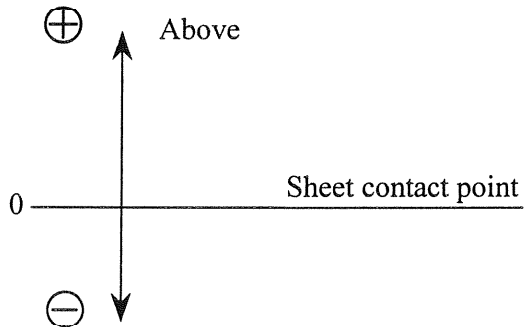

Below the sheet contact point, the Opening footswitch must be kept depressed for slow opening.

Above the sheet contact point, the Opening footswitch may be released.
In this case, the press brake opens until it reaches the programmed opening dead centre.

A second press of the footswitch takes it from the programmed opening dead centre to the mechanical opening dead centre.

LAPIS SERVICES INC
(219)-464-9131
AUTHORIZED CNC SYSTEM INTEGRATOR FANUC
Amada Support, Rebuilds,
Sales and Fanuc Control Upgrade

LAPIS SERVICES INC
(219)-464-9131

AUTHORIZED CNC SYSTEM INTEGRATOR
FANUC

Amada Support, Rebuilds,
Sales and Fanuc Control Upgrade

LAYOUT OF CONTROLS

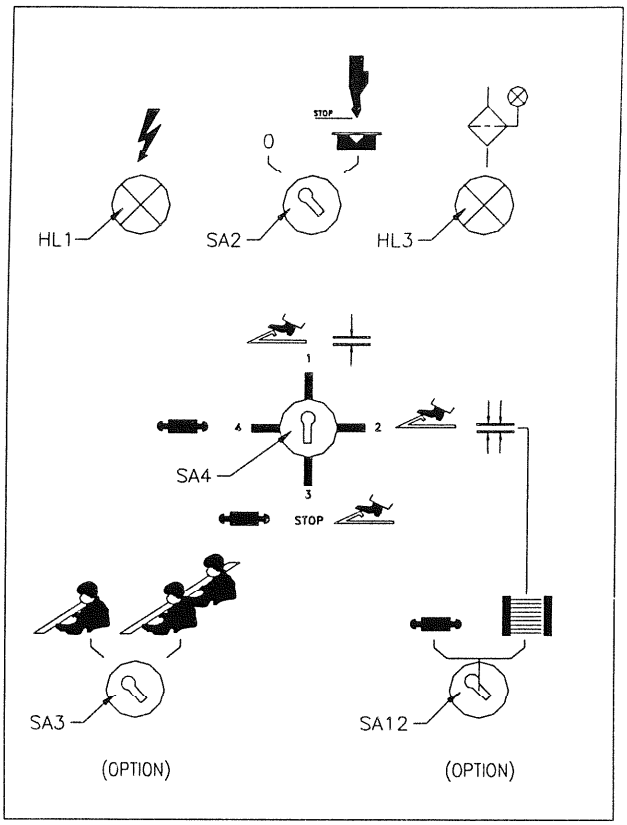

LAPIS SERVICES INC
(219)-464-9131
Amada Support, Rebuilds,
Sales and Fanuc Control Upgrade

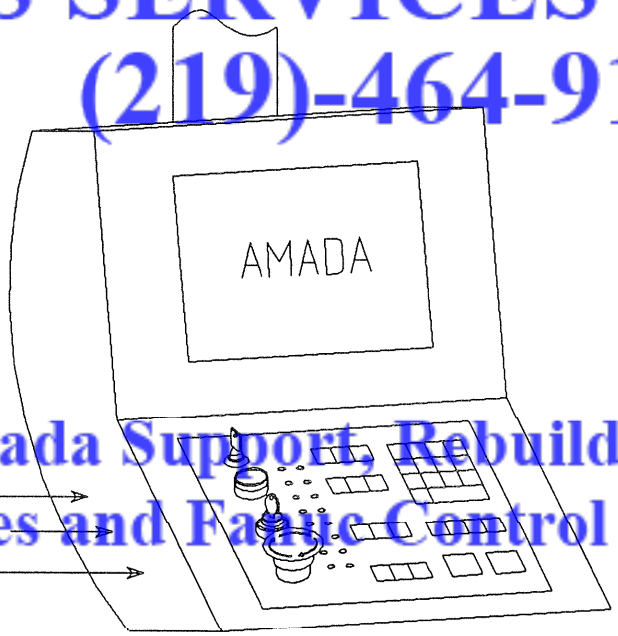

6.2.1. BASIC VERSION MACHINE (WITHOUT LIGHT GUARD)

CYCLE 1: ADJUSTMENT CYCLE
WITH MOBILE BEAM STOPPING AT SEQUENCE POINT

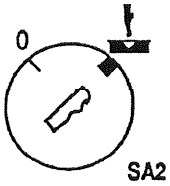

- Control: Closing footswitch.
- Switch SA2 on Position .
- Switch SA4 on Position 1.

BREAKDOWN OF CYCLE:

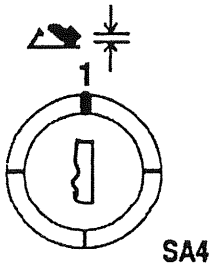

- Over entire stroke: working speed.
- Outside the sequence level, pressing the Closing footswitch closes the press brake as far as the sequence point.
- Stop at sequence point.
- Release the Closing footswitch.
- Press the Closing footswitch again to continue the cycle.

CYCLE 1: ADJUSTMENT CYCLE
MOBILE BEAM NOT STOPPING AT SEQUENCE POINT

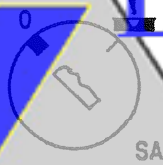

- Control: Closing footswitch.
- Switch SA4 on Position 1.
- Switch SA2 on Position 0.

BREAKDOWN OF CYCLE:

- Over entire stroke: working speed.
- No stop at sequence point.

LAPIS SERVICES INC
(219)-464-9131
Amada Support, Rebuilds,
Sales and Fanuc Control Upgrade
AUTHORIZED CNC SYSTEM INTEGRATOR
FANUC

BASIC VERSION MACHINE (WITHOUT LIGHT GUARD)

⚠	**IMPORTANT NOTE** This cycle should be used for large sheet bending only (operator/bend distance >850 mm), because the operator's hands are then protected by the blank's size. Selection of this cycle and the corresponding control unit, performed by lockable switches SA2 and SA4, must be performed **under the responsibility** of a person authorised to do so.

CYCLE 2 WITH MOBILE BEAM STOPPING AT SEQUENCE POINT

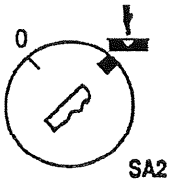

- Control unit: Closing footswitch.
- Switch SA2 on Position .
- Switch SA4 on Position 2.

BREAKDOWN OF CYCLE:

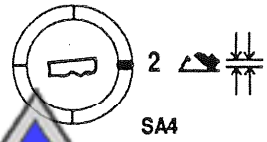

- Above sequence level, pressing the Closing footswitch closes the press brake at high speed until the sequence point is reached.
- Stop at sequence point.
- Release the Closing footswitch.
- Press the Closing footswitch to continue the cycle at working speed (below 10 mm/s).

CYCLE 2 MOBILE BEAM NOT STOPPING AT SEQUENCE POINT

- Control: Closing footswitch.
- Switch SA4 on Position 2.
- Switch SA2 on Position 0.

BREAKDOWN OF CYCLE:

- Above the sequence point, lowering at high speed.
- No stop at sequence point.
- Working stroke continues below the sequence point at low speed.

LAPIS SERVICES INC
(219) 464-9131
Amada Support, Rebuilds, Sales and Fanuc Control Upgrade
AUTHORIZED CNC SYSTEM INTEGRATOR FANUC

LAPIS SERVICES INC
(219)-464-9131

Amada Support, Rebuilds,
Sales and Fanuc Control Upgrade

AUTHORIZED CNC SYSTEM
FANUC
INTEGRATOR

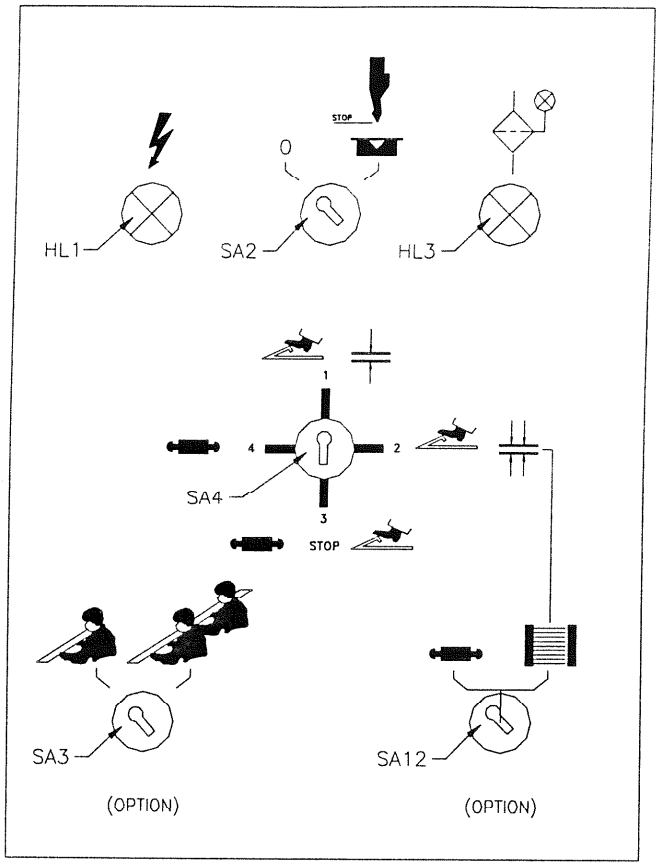

LAPIS SERVICES INC
(219)-464-9131
Amada Support, Rebuilds,
Sales and Fanuc Control Upgrade

CYCLE 3

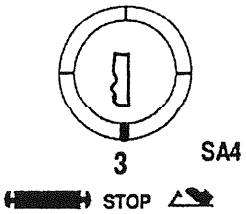

- Control: Two-hand control unit + Closing footswitch.
- Switch SA4 on Position 3.
- Position of SA2 is not important.

BREAKDOWN OF CYCLE:

- Closure at approach speed to sequence level using the two-hand console. Press both pushbuttons at the same time.
- Stopping is **mandatory** at sequence level.
- Release the two-hand control.
- Closure at working speed above sequence level using the footswitch.
- Pressure dwell for a programmed time.
- Decompression over a time determined according to the working force.
- Open at high speed to programmed opening dead centre.

> **CAUTION**: Releasing the footswitch during the closing phase stops the beam in position.
> Activation of the Opening footswitch takes priority: it opens the beam at any point in the cycle.

LAPIS SERVICES INC
(219)-464-9131
AUTHORIZED CNC SYSTEM INTEGRATOR
FANUC
Amada Support, Rebuilds,
Sales and Fanuc Control Upgrade

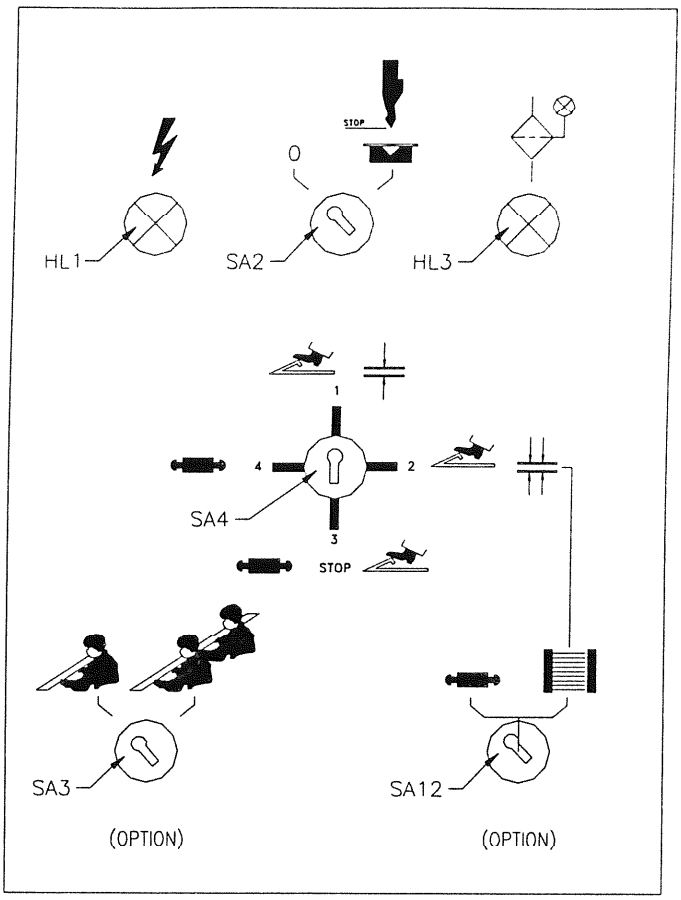

LAPIS SERVICES INC
(219)-464-9131
Amada Support, Rebuilds,
Sales and Fanuc Control Upgrade
AUTHORIZED CNC SYSTEM INTEGRATOR
FANUC

CYCLE 4
WITH MOBILE BEAM STOPPING AT SEQUENCE POINT

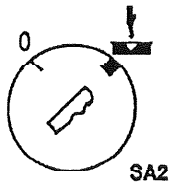

- Control: two-hand console.
- Switch SA4 on Position .
- Switch SA2 on Position .

BREAKDOWN OF CYCLE:

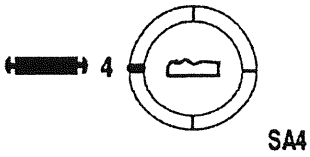

- Above sequence level, pressing the pushbuttons on the two-hand console closes the press brake at high speed until it reaches the sequence point.
- Stop at sequence point.
- Release the pushbuttons on the two-hand console.
- To continue the cycle at working speed, press the two-hand console pushbuttons again.

CYCLE 4
MOBILE BEAM NOT STOPPING AT SEQUENCE POINT

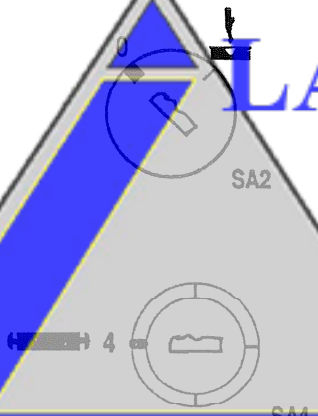

- Control: two-hand console.
- Switch SA4 on Position .
- Switch SA2 on Position 0.

BREAKDOWN OF CYCLE:

- Above the sequence point, lowering at high speed.
- No stop at sequence point.
- Continue working stroke below sequence point at low speed.

LAPIS SERVICES INC
(219)-464-9131
Amada Support, Rebuilds,
Sales and Fanuc Control Upgrade
AUTHORIZED CNC SYSTEM INTEGRATOR FANUC

LAPIS SERVICES INC
(219)-464-9131

AUTHORIZED CNC SYSTEM
FANUC
INTEGRATOR

Amada Support, Rebuilds,
Sales and Fanuc Control Upgrade

7. MAINTENANCE

CAUTION: Any maintenance operation liable to cause upper beam movement (hydraulic circuit, cylinder, etc.) must be performed with the beam in low position, or using the beam immobilising parts intended for transport purposes (Para. 2.3.4).

7.1. INTRODUCTION

This chapter describes the operations required to maintain the qualities and characteristics of your machine. A press brake is exposed to the harsh conditions of a production shop: welding fumes, grinding dust, sheet oil, rust particles, etc.

But a modern machine tool like this one is equipped with high-tech precision components: ball screws and guides, notched belt and pulley, proportional hydraulic valves, linear scales, diskette drive, etc, which require periodic maintenance. The frequency of periodic maintenance is based on 8 hours of operation per day under normal working conditions. It must be increased accordingly in the event of production at two or three shifts (16 to 24 hours per day), and does not eliminate the need for maintenance according to condition in the event that oiled or galvanised sheets are used for large production runs.

LAPIS SERVICES INC
(219)-464-9131
AUTHORIZED CNC SYSTEM INTEGRATOR
FANUC
Amada Support, Rebuilds,
Sales and Fanuc Control Upgrade

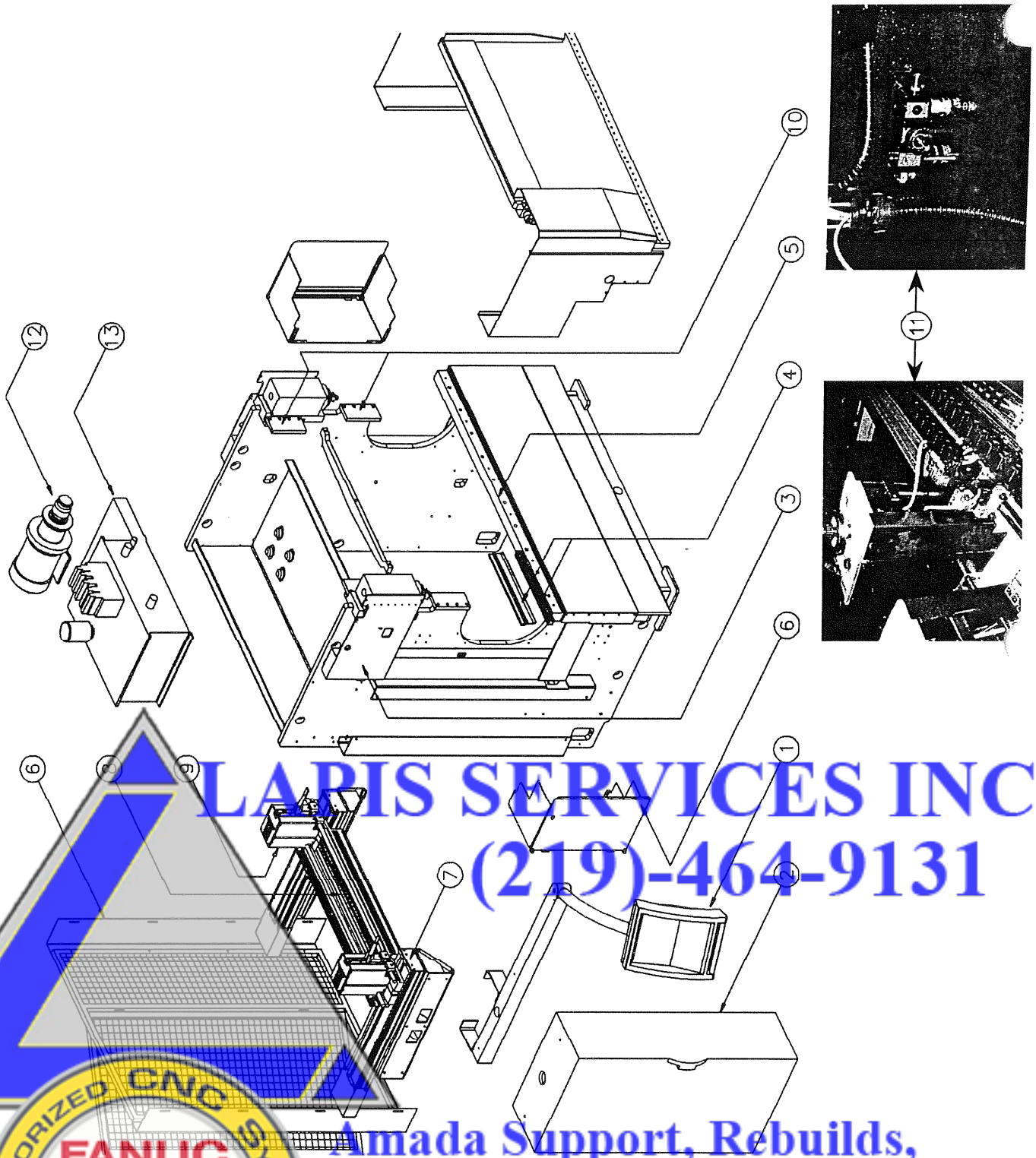

LAPIS SERVICES INC
(219)-464-9131
Amada Support, Rebuilds,
Sales and Fanuc Control Upgrade
AUTHORIZED CNC SYSTEM INTEGRATOR
FANUC

7.2. MACHINE PERIODIC MAINTENANCE

- COMPOSITION – List of components subject to periodic maintenance

Item 1 - OPERATOR CONSOLE
2 - ELECTRICAL CABINET
3 - MEASUREMENT GOOSE NECK
4 - LOWER/UPPER TOOLS
5 - LOWER BEAM
6 - PROTECTIVE DEVICES
7 - X-AXIS BACK GAUGE
8 - Z-AXIS BACK GAUGE
9 - R1/R2 AXES BACK GAUGE
10 - RAIL
11 - PNEUMATIC ALL-OR-NOTHING OPTION (TORP)
12 - HYDRAULIC UNIT
13 - OIL PAN

LAPIS SERVICES INC
(219)-464-9131
AUTHORIZED CNC SYSTEM INTEGRATOR FANUC
Amada Support, Rebuilds,
Sales and Fanuc Control Upgrade

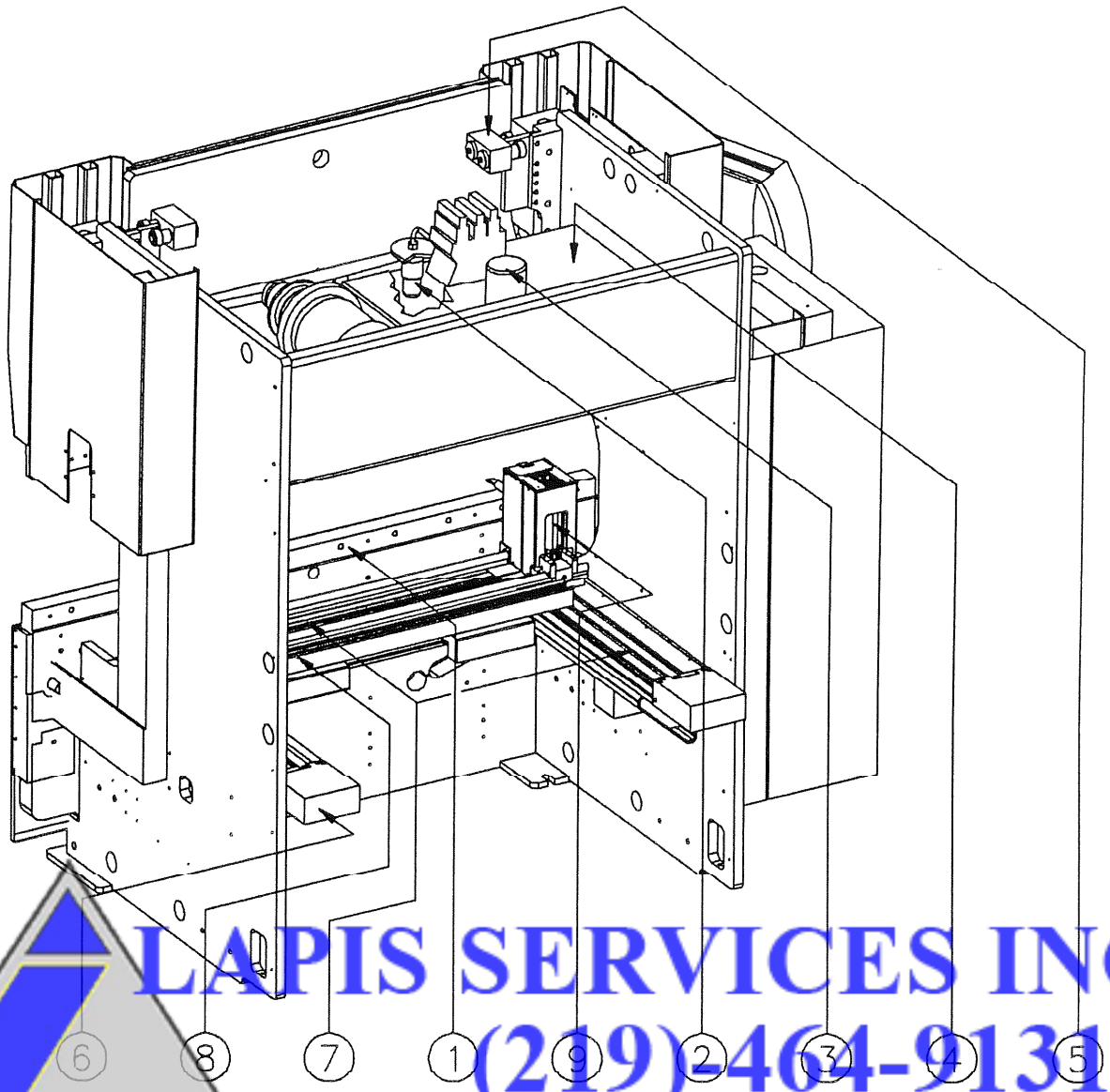

LAPIS SERVICES INC
(219)464-9131
Amada Support, Rebuilds,
Sales and Fanuc Control Upgrade
AUTHORIZED CNC SYSTEM INTEGRATOR
FANUC

MACHINE PERIODIC MAINTENANCE

FREQUENCY	ITEM	APPLIES TO	PRODUCT
Weekly	6	Ball screw	KLUBER-ISOFLEX-TOPAS L32
Weekly	7	Guides	SKF-LGMT2
Weekly	8	Belts	Vaseline oil
Twice monthly	9	Ball screw + guide	Dry lubricant
Monthly	1	Beam + dist. piece	TPFE
Twice monthly	5	Rail	HP grease
2000 hours	2	Filter	H00284
2000 hours	3	Breather	H02160
2000 hours	4	Oil	Shell DS46 or equivalent

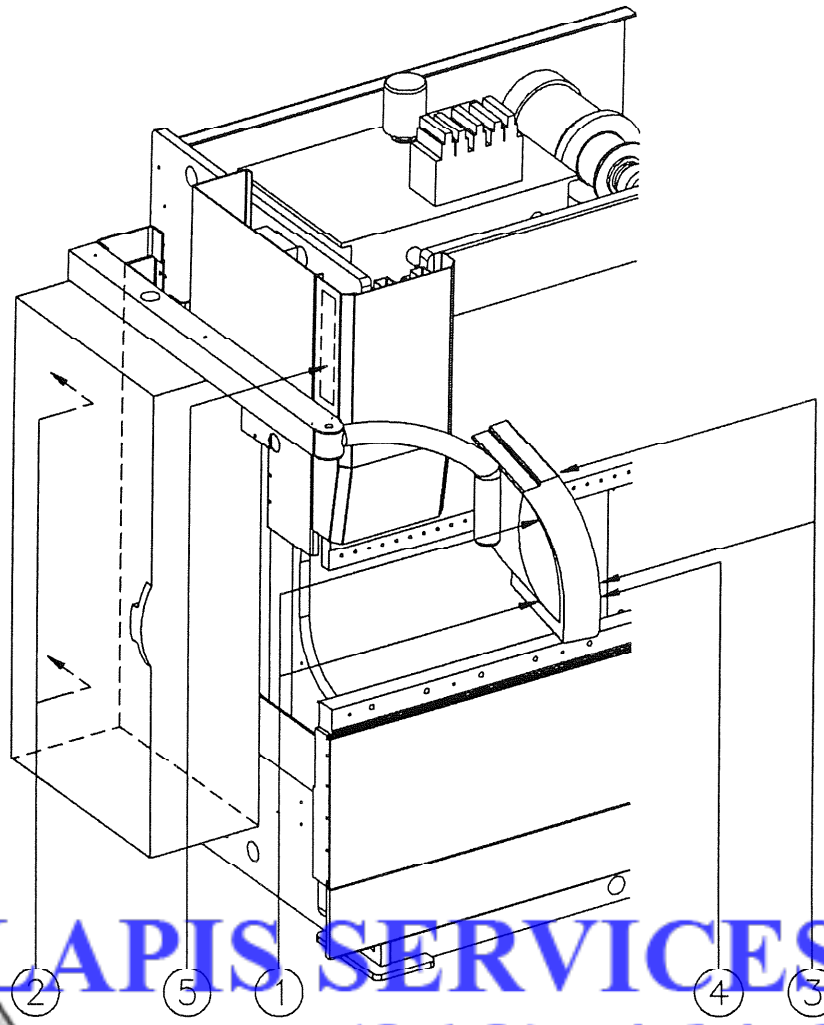

LAPIS SERVICES INC
(219)-464-9131
Amada Support, Rebuilds,
Sales and Fanuc Control Upgrade
AUTHORIZED CNC SYSTEM INTEGRATOR
FANUC

MACHINE PERIODIC MAINTENANCE

FREQUENCY	ITEM	COMPONENT	PRODUCT/REF.
Twice monthly	1	NC filter	Cleaning agent
Twice monthly	2	Cabinet filter	Cleaning agent
Monthly	3	Keyboard/screen	Gentle cleaning agent + cloths
Monthly	4	Diskette drive	3 ½ " cleaning diskette + alcohol
Quarterly	5	Scale guides	Lithium grease
Quarterly	1	Filter element	Ref. E50753
Quarterly	2	Filter element	Ref. E18299

7.2.1. CHECKS SPECIFIC TO THE HYDRAULIC INSTALLATION

The hydraulic installation of your press brake has proportional hydraulic directional control valves.

The reliability of these components depends above all on the cleanliness of the oil.

Remember these essential rules:

- Every hydraulic circuit is contaminated even before the system is assembled.
- Abrasion wear causes additional contamination during system operation.
- This also occurs when the circuit is topped up with new hydraulic fluid that is supposed to be clean.
- Because of this, you are advised not to top up or perform oil changes too often.
- Well-filtered oil degrades very slowly.
- Unfiltered oil increases the contamination level and leads to earlier filter clogging.

IMPORTANT NOTE
Failure to apply the above maintenance instructions can lead to a total or partial loss of guarantee cover on the units concerned.

LAPIS SERVICES INC
(219)-464-9131

CAUTION: The pump must never run without oil.

CAUTION: To continue operating in complete safety, use only original replacement parts.

AUTHORIZED CNC SYSTEM INTEGRATOR FANUC
Amada Support, Rebuilds,
Sales and Fanuc Control Upgrade

LAPIS SERVICES INC
(219)-464-9131

AUTHORIZED CNC SYSTEM INTEGRATOR
FANUC

Amada Support, Rebuilds,
Sales and Fanuc Control Upgrade

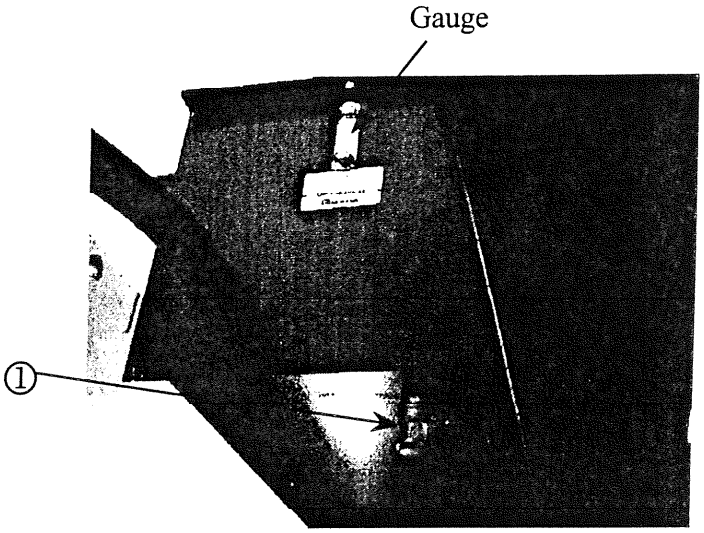

LAPIS SERVICES INC
(219)-464-9131
Amada Support, Rebuilds,
Sales and Fanuc Control Upgrade
AUTHORIZED CNC SYSTEM
FANUC
INTEGRATOR

7.2.2. OIL CHANGES

First oil change: After 1000 hours.
Subsequent oil changes: Every 2000 hours or after one year, whichever comes first.

Lock the machine's electrical power supply.

Ensure that the lower beam is in its top position.

Remove the drain plug (Item 1), and replace it with a hose.

Open the valve and completely drain the reservoir.

7.2.3. FILLING PROCEDURE

Close the drain valve and remove the hose.

Reinstall the drain plug.

Fill the reservoir with Shell Tellus 46 or an equivalent ISO 46-compliant oil. Reservoir capacity: see Chapter 2, Characteristics.

During the filling operation, filter the oil through a 6-micron absolute filter cartridge (Item 2) $\beta x = 200$.

Check the level. It should be between the minimum and maximum marks on the gauge.

Replace the air filter of the hydraulic pan breather, Amada Part No. H02160.

Remove the bowl feeder (Item 3) from the high pressure filter.

LAPIS SERVICES INC
(219)-464-9131
AUTHORIZED CNC SYSTEM INTEGRATOR FANUC
Amada Support, Rebuilds,
Sales and Fanuc Control Upgrade

Replace the Amada oil filter cartridge.

Reinstall the filter bowl feeder.

NOTE

After an oil change, do not replace the filter cartridge until the hydraulic unit has been running for half an hour. The purpose of this is to avoid contaminating the new cartridge.

Unlock the electrical power supply.

CAUTION: The legislation in force prohibits the disposal of oil into the environment. Take care to observe the regulations in force in your region.

7.3. RECOMMENDATIONS

For these maintenance operations, we have created kits containing the products you need for your machine:

- Machine maintenance kit, Part No. M90074 (see description, Page 30/34).
- Numerical Control unit maintenance kit, Part No. M90075.

IMPORTANT NOTE

Failure to apply the above maintenance instructions can lead to a total or partial loss of guarantee cover on the units concerned.

CAUTION: All maintenance and preventive maintenance operations must be performed with the hydraulic unit shut down, with the power key removed or main circuit breaker locked.

LAPIS SERVICES INC
(219)-464-9131
AUTHORIZED CNC SYSTEMS INTEGRATOR
FANUC
Amada Support, Rebuilds, Sales and Fanuc Control Upgrade

ACCESS

For access at a height (e.g. above 1.8 m), additional equipment must be used (such as an inspection platform, ladder, or stepladder). This equipment should be used only after appropriate training (checking fitness for purpose and stability of the equipment).

The manufacturer recommends access via the rear of the machine for the hydraulic components.

7.3.1. CHECKS SPECIFIC TO THE LIGHT GUARD
(See Options, Appendix E1)

LAPIS SERVICES INC
(219)-464-9131
AUTHORIZED CNC SYSTEM INTEGRATOR FANUC
Amada Support, Rebuilds,
Sales and Fanuc Control Upgrade

PERIODIC INSPECTION AND CLEANING LIST FOR THE VARIOUS COMPONENTS

WARNING

THIS PERIODIC MAINTENANCE SCHEDULE IS RELATED TO MACHINE SAFETY.

LAPIS SERVICES INC
(219)-464-9131

AUTHORIZED CNC SYSTEM FANUC INTEGRATOR

Amada Support, Rebuilds,
Sales and Fanuc Control Upgrade

LAPIS SERVICES INC
(219)-464-9131

AUTHORIZED CNC SYSTEM INTEGRATOR
FANUC

Amada Support, Rebuilds,
Sales and Fanuc Control Upgrade

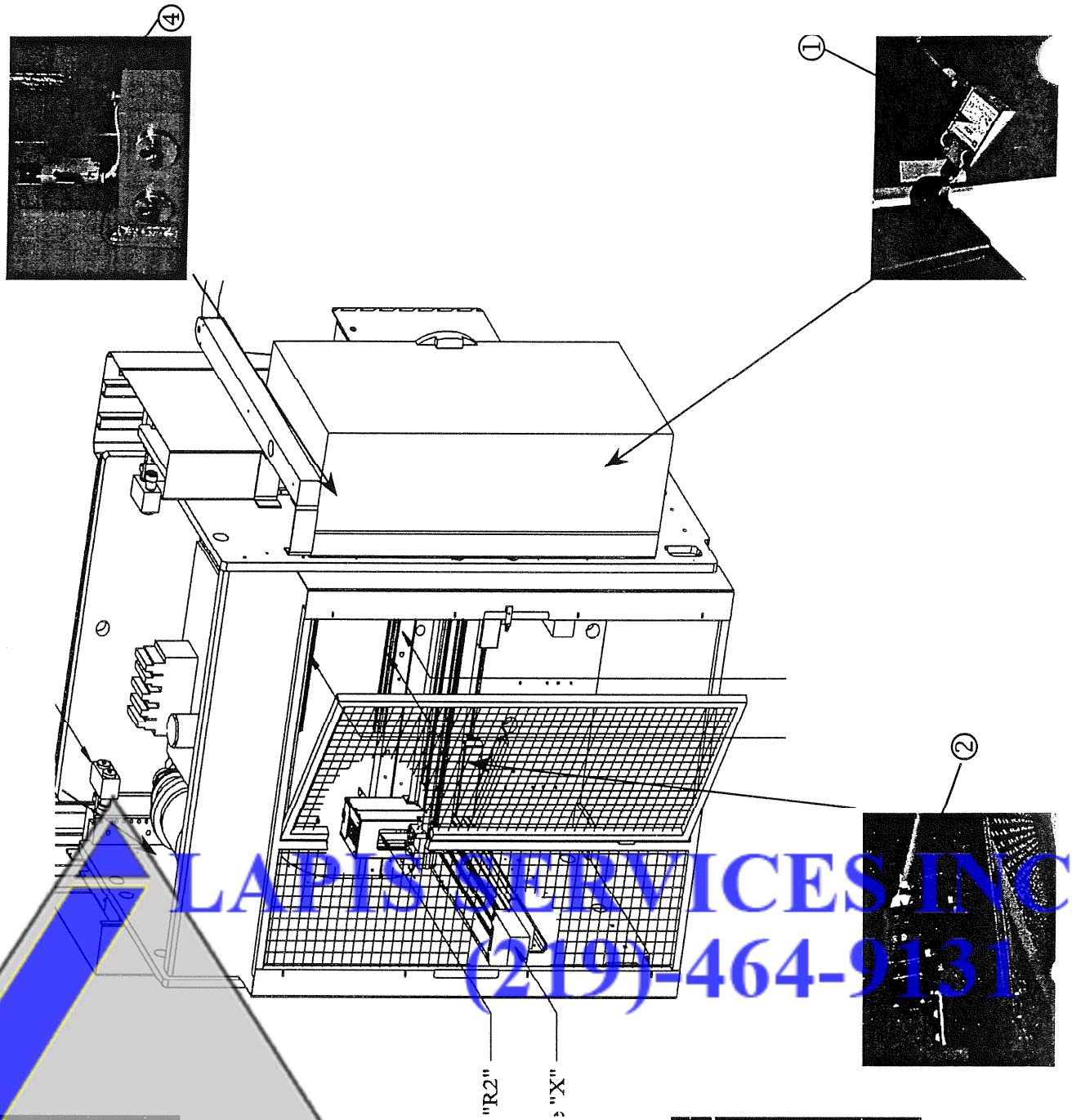

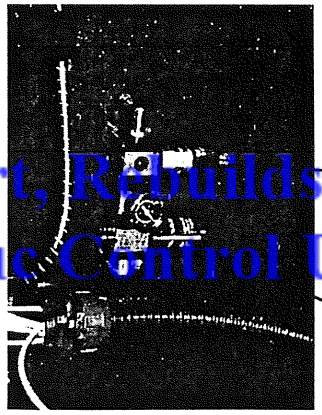

Fig. 7.1

LAPIS SERVICES INC
(219)-464-9131
Amada Support, Rebuilds,
Sales and Fanuc Control Upgrade
AUTHORIZED CNC SYSTEM INTEGRATOR
FANUC

ASSEMBLY	SUBASSEMBLY	ITEM	FREQ.	INSPECTION/METHOD	TIME
	<u>If pneumatic all-or-nothing option TORP</u>				
	Settler	Fig. 7.1	1/day	- Empty the jar	
	Lubricator		Weekly	- Check the level in the jar and check the drop by drop - Top up oil with CL ISO VG10 to ISO 3448 (Mobil DTE21 or equivalent)	
	General items	Fig. 7.2	Weekly	- Cleaning off oil carbon and dust using a shop vacuum cleaner: - The various parts of the back gauge - The working parts of the upper and lower beams - Tooling (filler block, punch, die) Use of an air gun should be avoided because it blows dust into inaccessible areas.	
	Safety contacts		Weekly	- Check that contacts are operational - Goose neck protection - Rear screen frame - Separator (Tandem/Mono machine) - Out-of-parallel detector	
		Item 1			
		Item 2			
		Item 3			
		Item 4			

LAPIS SERVICES INC
(219) 464-9131
Amada Support, Rebuilds,
Sales and Fanuc Control Upgrade
AUTHORIZED CNC SYSTEM INTEGRATOR FANUC

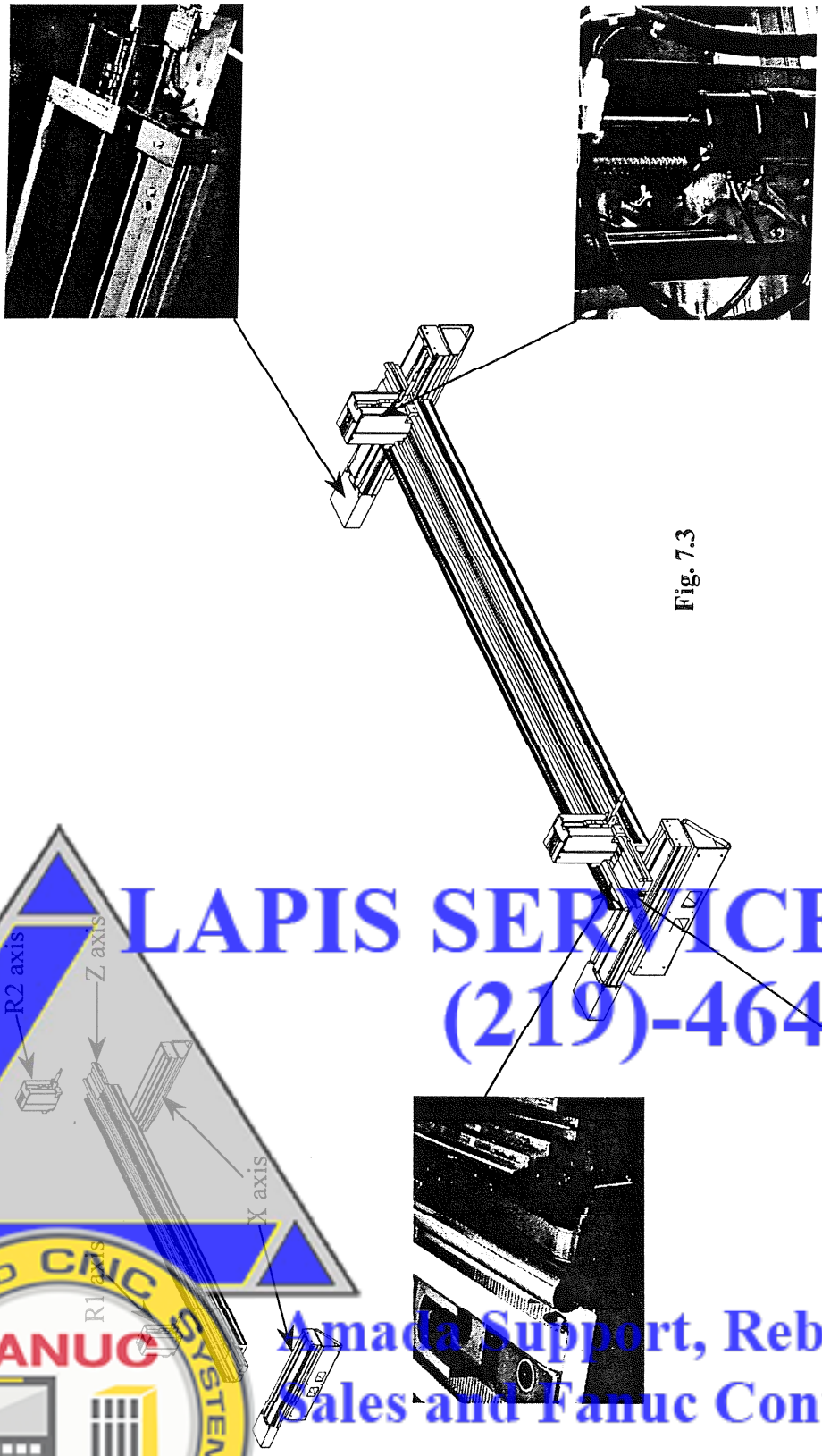

Fig. 7.3

LAPIS SERVICES INC
(219)-464-9131
Amada Support, Rebuilds,
Sales and Fanuc Control Upgrade
AUTHORIZED CNC SYSTEM INTEGRATOR
FANUC

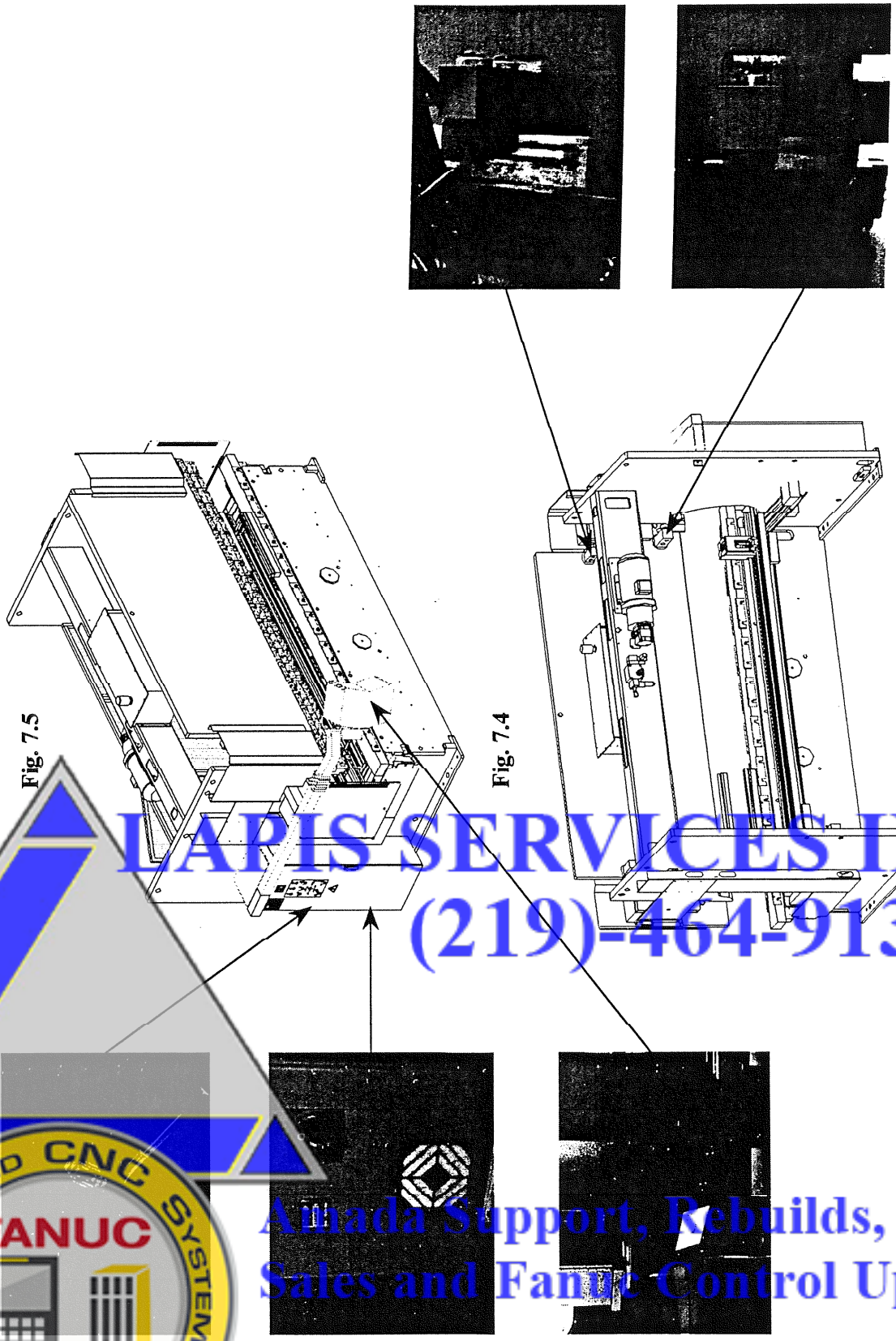

Fig. 7.5

Fig. 7.4

LAPIS SERVICES INC
(219)-464-9131
Amada Support, Rebuilds,
Sales and Fanuc Control Upgrade
AUTHORIZED CNC SYSTEM INTEGRATOR FANUC

LAPIS SERVICES INC
(219)-464-9131

Amada Support, Rebuilds,
Sales and Fanuc Control Upgrade

ASSEMBLY	SUBASSEMBLY	ITEM	FREQ.	INSPECTION/METHOD	TIME
	Back gauge	Fig. 7.3	Weekly	- Check the ball screws and rails of both arms (X axes) - Lubrication with KLUBER-ISOFLEX-TOPAS L32 grease - Lubricate the crossmember guides (Z axis) using SKF-LGMT2 grease - Check the belts (Z axis), clean using Vaseline oil. - Check tension in the crossmember drive belts (Z axis) - Check the (mounting) screws + rollers. Dry lubricate.	
	Upper beam guide bar	Fig. 7.4	Twice monthly	- Dry lubrication screw + rail (Axes R1, R2)	
	Filters	Fig. 7.5	Twice monthly	- Remove and clean using compressed air: 1) Electrical cabinet filters 2) NC unit filters	
	Light guard interlock (option)			- See Appendix E1	

LAPIS SERVICES INC
(219)-464-9131
AUTHORIZED CNC SYSTEM INTEGRATOR FANUC
Amada Support, Rebuilds,
Sales and Fanuc Control Upgrade

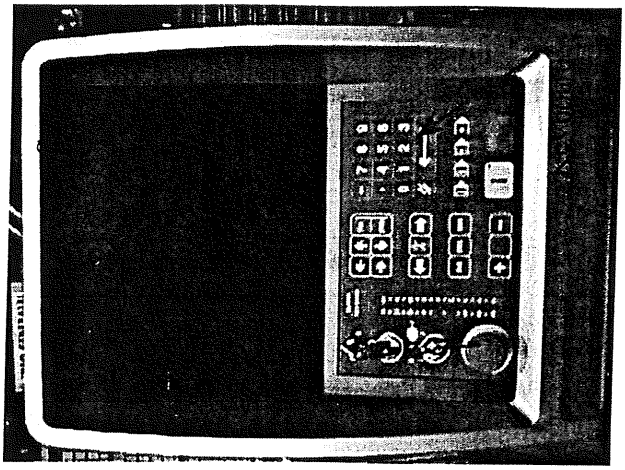

Fig. 7.6

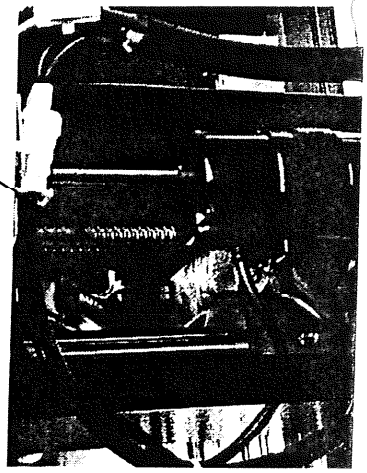

Axes R1 R2

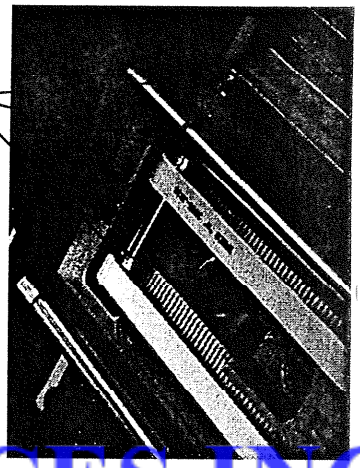

Axis

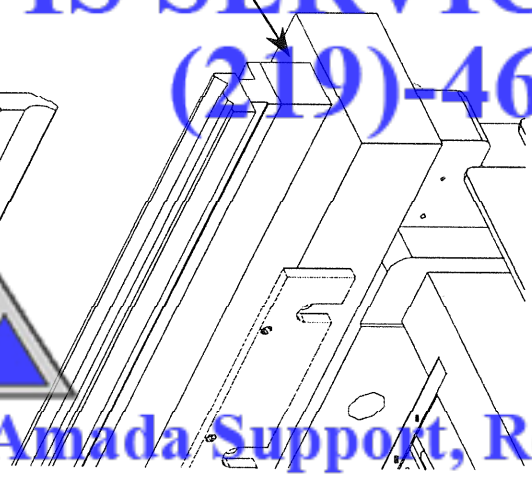

Fig. 7.

LAPIS SERVICES INC
(219)-464-9131
Amada Support, Rebuilds,
Sales and Fanuc Control Upgrade
AUTHORIZED CNC SYSTEM INTEGRATOR
FANUC

ASSEMBLY	SUBASSEMBLY	ITEM	FREQ.	INSPECTION/METHOD	TIME
Mechanical					
	NC cabinet	Fig. 7.6	1/month	- Clean using a cloth soaked in dilute ammonia solution - Screen - Keyboard	
	Tools	Fig. 7.7	1/month	- After cleaning, protect the unpainted parts using spray-on PTFE (Teflon) or protective grease: 1) Adjustable split distance pieces 2) Bearing surfaces of distance pieces under upper beam	
	Rear gauge		1/month	- Use fine oil (Vaseline) to lubricate the various notched pulleys of the Z axis. After cleaning, use a small brush to apply lithium grease to the bevelled screw of axes R1 and R2 (Up and Down)	

LAPIS SERVICES INC
(219)-464-9131
AUTHORIZED CNC SYSTEM INTEGRATOR FANUC
Amada Support, Rebuilds,
Sales and Fanuc Control Upgrade

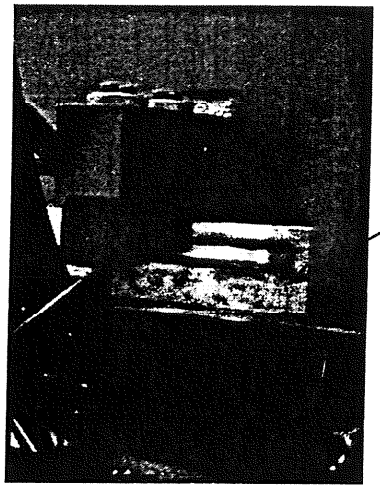

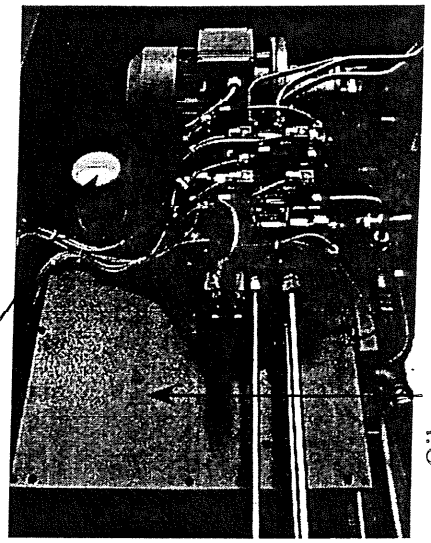

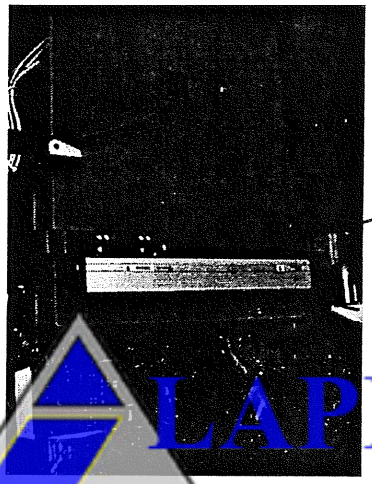

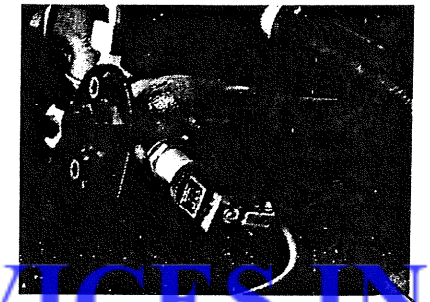

LAPIS SERVICES INC
(219)-464-9131
Amada Support, Rebuilds
Sales and Fanuc Control Upgrade
AUTHORIZED CNC SYSTEM INTEGRATOR
FANUC

ASSEMBLY	SUBASSEMBLY	ITEM	FREQ.	INSPECTION/METHOD	TIME
				After cleaning using lithium grease, grease the following:	
	Back gauge		3 months	- Z axis and X axes rails	
	Upper beam		3 months	- Guide rail	
	Measurement goose neck		3 months	- Linear scale rail (remove cylinder covers)	
			3 months	- Replace air filter elements - Electrical cabinet, Part No. E18299 - Numerical control, Ref. E50753	
	Hydraulic		2000 hours	- Replace oil filters and breathers - Drain oil pan	

LAPIS SERVICES INC
(219)-464-9131
Amada Support, Rebuilds,
Sales and Fanuc Control Upgrade
AUTHORIZED CNC SYSTEM INTEGRATOR FANUC

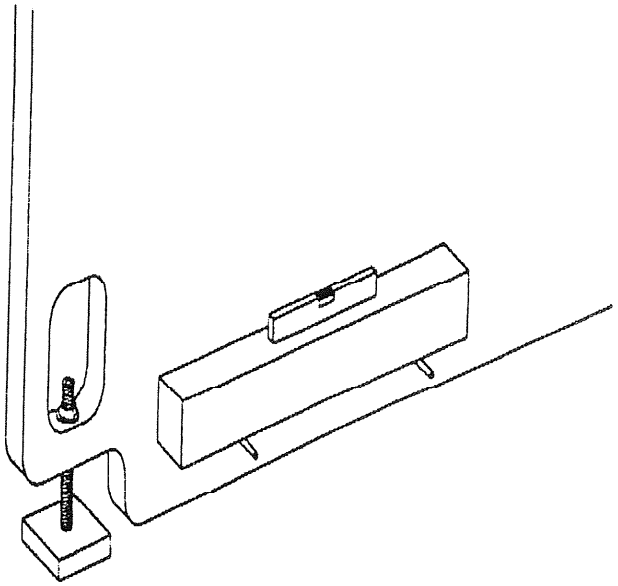

Fig. 7.8

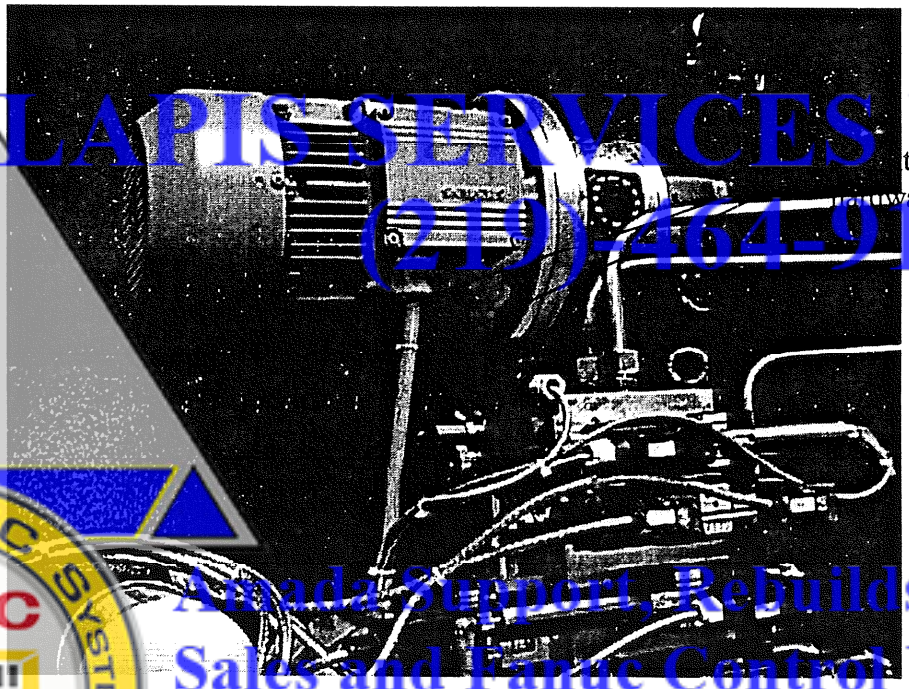

Fig. 7.9

LAPIS SERVICES INC
(219)-464-9131
Amada Support, Rebuilds,
Sales and Fanuc Control Upgrade
AUTHORIZED CNC SYSTEM INTEGRATOR FANUC

ASSEMBLY	SUBASSEMBLY	ITEM	FREQ.	INSPECTION/METHOD	TIME
Mechanical					
	Frame	Fig. 7.8	6 months	- Check machine levelling (see Ch. 3.3)	
	Motor	Fig. 7.9	6 months	- Check securing of motor to its plates and silent blocks	
	Safety interlock (option) Light guard support (see page 11/35, specific checks)		6 months	- Check mountings: - TX/RX units - Articulated arm - Protection - Check wiring	
	Hydraulic/pneumatic pipework (see page 6/35, Checks Specific to the Hydraulic Installation)		6 months	- Check connections - Detect leaks	
	Electrical cabinet			- Check fan operation	
	Emergency stop		6 months	- Check emergency stop operation (safety devices)	
			6 months		

LAPIS SERVICES INC
(219)-464-9131
AUTHORIZED CNC SYSTEM INTEGRATOR FANUC
Amada Support, Rebuilds,
Sales and Fanuc Control Upgrade

7.4. TROUBLESHOOTING

7.4.1. TROUBLESHOOTING TABLE

The purpose of this table is to help you rectify simple problems such as an operating error or blown fuse. If the problem persists, please contact the Amada Metrecs Service Department (telephone and fax numbers given at the beginning of manual).

PROBLEM	SOLUTION
Keyboard does not operate.	• Check position of keyboard key. Position 0: Keyboard inactive Position 1: Keyboard active.
The back gauge is out of parallel with the tools	• If the back gauge is outside tolerance for parallelism with the tools, it goes into interlock mode (pump green indicator light goes off). Push or pull the back gauge to reset the pump. For the pump to reset, (X1 – X2) must be less than the allowable overhang limit.
Green indicator light does not light up.	• Check the Left, Right, and Console emergency stops.

Refer to the Incidents table in the machine electrical drawing.

TO CONTINUE OPERATING IN COMPLETE SAFETY, USE ONLY ORIGINAL REPLACEMENT PARTS

LAPIS SERVICES INC
(219)-464-9131
AUTHORIZED CNC SYSTEM FANUC INTEGRATOR
Amada Support, Rebuilds,
Sales and Fanuc Control Upgrade

7.4.2. REGULATORY PERIODIC (QUARTERLY) INSPECTION: GENERAL POINTS (FRANCE ONLY)

Article R233.11 of the labour law and the Act dated 5 March 1993, modified by the Act dated 4 June 1993, require preventive maintenance to be performed on a quarterly basis. The purpose of this regular servicing is to detect any fault liable to cause an accident in advance, so that such faults can be rectified.

These checks are limited to the visible parts and components accessible by removing the following cases or covers, and include the following:

• Visual check on the physical condition of the equipment:

- Stability of the machine and its accessories: mounting of components liable to fall or be thrown off,
- Mounting of protective components,
- Condition of equipment: detection of abnormal oxidation, deformation,, and cracks,
- Cleanliness: accumulation of offcuts or dust,
- Condition of filters and outlets,
- Condition of interfaces and electrical, hydraulic, and pneumatic connectors.

• Operating tests to check functional components involved in the work:

- Presence and operation of protective devices in all operating modes,
- Abnormal operating characteristics: noise, vibration, temperature, impact,
- Operation of manual stopping devices,
- Operation of stopping devices associated with a protective function,
- Electrical operation under manual force of false parallelism sensor SQ1 and SQ2 contacts located on the upper beam.

• Check of settings and clearances

- Fluid levels,
- Air and oil pressure,
- End-of-travel adjustment.

• Check on condition of indicators:

- Condition of measuring devices: manometers,
- Condition of signalling devices: indicator lights and inscriptions.

LAPIS SERVICES INC
(219)-464-9131
Amada Support, Rebuilds,
Sales and Fanuc Control Upgrade
AUTHORIZED CNC SYSTEM INTEGRATOR FANUC

The results of this service call are recorded in a safety register opened by the Site Manager and made available to the Health and Safety Executive and the CHSCT (if any) at all times.

This measure applies to any manual-feed press working on cold metals.

The servicing must be performed under the responsibility of the Site Manager by qualified persons trained in risk prevention. A list of such personnel is made available to the Health and Safety Executive.

These provisions came into force on 1 December 1993.

LAPIS SERVICES INC
(219)-464-9131
AUTHORIZED CNC SYSTEM INTEGRATOR
FANUC
Amada Support, Rebuilds,
Sales and Fanuc Control Upgrade

MACHINE MAINTENANCE KIT

Part No.: M90074

Precautions: **Easily flammable liquid**
- Use and store away from any flame, heat source, or electrical device in operation. Do not smoke.
- Spray in short bursts only.
- Air thoroughly after use.

This kit was specially designed to facilitate the routing maintenance of Amada press brakes and shearing presses. The products it contains are specifically suited to the heavy duty conditions of an industrial environment.
An aerosol is easy to use, prevents waste, and provides access without disassembly.
The contents are optimised for the latest machines, equipped with micromechanisms, charged rails, and precision tools.

Description:

2 lubricant aerosols:
For the ball screws and guides, micromechanisms and notched pulleys.

1 cleaning and anti-seizing aerosol:
To correct a maintenance and cleaning deficiency, for guide, ball screw, and precision mechanisms.

1 greasing aerosol:
For guides (rails and rollers) of rams and blade holder, as well as chamfered screws.

1 protective aerosol:
For the unpainted parts of the machine and press tools.

Use:

The products should be applied according to the instructions in the Maintenance chapter of your machine's operator manual, as often as necessary.
Clean the surfaces to be treated. Use the cleaning/anti-seizing spray for the inaccessible parts. Spray in brief bursts from a distance of 30 cm away from the part to be treated.

LAPIS SERVICES INC
(219)-464-9131
AUTHORIZED CNC SYSTEM INTEGRATOR
FANUC
Amada Support, Rebuilds,
Sales and Fanuc Control Upgrade

APPENDIX TO CHAPTER 7

SAFETY DATA SHEET
DRAWN UP ACCORDING TO NF T.01.100
IN COMPLIANCE WITH THE ACT DATED 5 JAN. 1993

1 - IDENTIFICATION

Product concerned: SHELL TELLUS 46 oil
Supplier: Shell Oil Company
Responsible body: M.K.L.U.
Use: Hydraulic oil
Ingredient subject to health and safety regulations: Zinc dithiophosphate
Maximum content: 0.4%

2 - STORAGE AND HANDLING

2.1 - SPECIAL PRECAUTIONS FOR STORAGE AND HANDLING

- Keep away from combustible materials; keep away from foodstuffs and drinks.
- Prolonged and repeated contact with the skin can cause skin conditions which are aggravated by minor injuries or rubbing against soiled clothing.
- Avoid splashing.
- After contact with the skin, wash immediately with copious water and approved detergents.
- Do not use irritant products or solvents.
- Do not wipe hands with cloths that were used for cleaning.
- Immediately remove any soiled or splashed clothing.
- Do not inhale the vapours, fumes, or spray.
- Do not eat, drink, or smoke during use.

2.2 - PACKING OR BOTTLING MATERIALS

- Use only containers, seals, pipes, etc. that are resistant to hydrocarbons.
- Hand any soiled packaging materials to an approved waste processing organisation.

2.3 - HAZARDOUS REACTIONS WITH: oxidant products

PREVENTIVE MEASURES: Store in a cool, clean, dry location with appropriate ventilation. Keep away from heat and oxidising agents.

LAPIS SERVICES INC
(219)-464-9131
AUTHORIZED CNC SYSTEM INTEGRATOR FANUC
Amada Support, Rebuilds,
Sales and Fanuc Control Upgrade

2.4 - HAZARDOUS DECOMPOSITION PRODUCTS

During combustion, unidentified organic or inorganic compounds can be formed, as well as sulphured hydrogen and short-chain alkylmercaptans.

2.5 - INDIVIDUAL PREVENTIVE MEASURES

- Barrier cream (on medical advice) or gloves,
- Goggles in the event of splashing,
- Avoid inhaling oil droplets,
- Avoid repeated or prolonged contact,
- When handling casks, wear safety shoes.

2.6 - SPECIAL PROTECTIVE MEASURES: not applicable

2.7 - MEASURES FOLLOWING A LEAK OR SPILLAGE

Eliminate or destroy the product: contain and recover using physical means (e.g. absorbent materials), degrease surfaces, eliminate scrap in accordance with Section 6. Do not use dispersing agents in the event of a risk of polluting the environment.

3 - INFLAMMATION AND EXPLOSION

3.1 - FLASH POINT: > 190°C in accordance with AFNOR NF M 07 019

3.2 - SELF-IGNITION TEMPERATURE

> 250°C according to ASTM E 659. This vapour can be significantly reduced under particular conditions (slow oxidation in strongly divided media).

3.3 - SPECIFIC FIRE OR EXPLOSION HAZARDS

Explosivity limit in air at ambient temperature = 1 to 10% vapour volume. The vapour pressure of this product is too low at ambient temperature for the lower explosivity limit to be reached.

3.4 - EXTINGUISHING EQUIPMENT

- RECOMMENDED: Foam, carbon dioxide, powder
- TO BE AVOIDED: Water jet and water spray extinguisher

LAPIS SERVICES INC
(219)-464-9131
AUTHORIZED CNC SYSTEM INTEGRATOR FANUC
Amada Support, Rebuilds, Sales and Fanuc Control Upgrade

3.5 - SPECIAL PROTECTIVE MEASURES FOR FIREFIGHTING

Wear breathing apparatus if required due to copious fumes.

3.6 - OTHER RECOMMENDATIONS

- Arrange your installation to avoid accidental oil splashes (e.g. seal failure) on hot cases and electrical contacts.
- Hydraulic oil leaks in a circuit under pressure result in jets of a fine spray that can reach very high speeds. Under these conditions, the lower ignition limit of the oil spray is reached for concentrations in the region of 45 grammes per cubic metre.

4 - TOXICOLOGICAL DATA

Maximum allowable concentration of oil spray in air: approximately 5 mg/m3.

- Under normal conditions of use, the mineral oils and other components of this product do not present an acute intoxication hazard.

- SPECIFIC TOXICOLOGICAL DATA: In the absence of toxicological data specific to SHELL TELLUS 46, we are able to provide the following indicative information by analogy with similar mineral oils:

ACUTE ORAL TOXICITY DL50: > 5 ml/kg

ACUTE PERCUTANEOUS TOXICITY DL 50: > 4 ml/kg

IRRITATION: - Skin: Considered to be a mild irritant
- Eyes: Considered to be a mild irritant

SENSITISATION: Unlikely to sensitise the skin.

CHRONIC TOXICITY: SHELL TELLUS products are formulated from severely refined mineral oils which are considered to be non-carcinogenic following toxicological tests performed on the skin of mice using the same types of oil.

SUMMARY:SHELL TELLUS oils are considered to be of a low level of acute systemic toxicity. In normal use, they are unlikely to irritate the skin or eyes, or to sensitise the skin. No long-term toxic effect is likely. Users are nonetheless advised to avoid repeated and/or prolonged contact with mineral oils such as SHELL TELLUS, which could lead to irritation or even dermatitis in the event of conditions of poor personal hygiene.

LAPIS SERVICES INC
(219)-464-9131
Amada Support, Rebuilds, Sales and Fanuc Control Upgrade
AUTHORIZED CNC SYSTEM INTEGRATOR FANUC

USED OILS: Used oils may contain impurities that are health hazards. They must be handled with care, and contact with the skin must be avoided whenever possible. Collection and disposal must be carried out in accordance with the regulations in force (see Section 6).

5 - FIRST AID

- Call a doctor
- Whilst waiting for the doctor to arrive, refer to the following guidelines:

INGESTION: No special treatment is normally required. Do not induce vomiting to avoid the risk of debris being sucked into the respiratory passages.

INHALATION: This risk exists only for oils that contain a high proportion of very light distillates.
If inhalation occurs, the mouth and gastro-intestinal tract may become irritated. In the event of exposure to a high vapour concentration, move the patient to a location with fresh air. Keep the patient warm and relaxed.

ASPIRATION: The risk of aspiration depends on the viscosity, which determines the ability of materials to be sucked into the respiratory system. In the event of suspected aspiration (e.g. during vomiting), transport the patient to hospital for emergency treatment.

EYES: Wash eyes with copious water, and consult a specialist.

SPECIFIC CASE: In the event of contamination via the skin by a high-pressure jet, there is a risk of contaminant introduction into the patients's system. The patient must be taken to hospital even if there is no obvious injury.

LAPIS SERVICES INC
(219)-464-9131

6 - ENVIRONMENTAL PROTECTION

Regulations concerning the disposal of oils and lubricants in surface, underground, and sea water: Acts 73-218 dated 23-02-73 and 77-254 dated 8-03-77, information notes dated 14-01-77 and 4-11-80.

Regulations concerning waste: Law 75-633 dated 15-07-75 and Act 77-974 dated 29-08-77 and Act 79-981 dated 21-11-79, modified by Acts 85-387 dated 29-03-85 and 89-192 dated 24-03-89 applying to the regulations concerning the recovery of used oil: Law 88-1261 dated 30-12-88.

AUTHORIZED CNC SYSTEM INTEGRATOR
FANUC
Amada Support, Rebunds,
Sales and Fanuc Control Upgrade

LAPIS SERVICES INC
(219)-464-9131

Amada Support, Rebuilds,
Sales and Fanuc Control Upgrade

APPENDIX A

PROGRAMMING MANUAL

CE

LAPIS SERVICES INC
(219)-464-9131

OPERATOR 2

VERSION 4

X 40779

Amada Support, Rebuilds,
Sales and Fanuc Control Upgrade

BP 40040 – 95912 Roissy aéroport CDG cedex – Tél. : 01 49 90 30 00 – Fax : 01 49 90 31 99

Issue 05/99

LAPIS SERVICES INC
(219)-464-9131

AUTHORIZED CNC SYSTEM
FANUC
INTEGRATOR

Amada Support, Rebuilds,
Sales and Fanuc Control Upgrade

TABLE OF CONTENTS

1. THE NUMERICAL CONTROL (NC) 1

1.1. INTRODUCTION 1

1.2. OPTIONS 3

1.3. IDENTIFICATION OF THE CONTROL FEATURES 5

1.4. INTRODUCTION AND DESCRIPTION OF THE MENU PAGES 7

1.5. INSTALLATION – START-UP 15

1.6. MACHINE INITIALISATION 17

1.7. PROGRAMMING 19

1.8. "MANUAL 1 "SIMPLIFIED PROGRAMMING" PROGRAMMING MODE 20

1.9. "MANUAL 2" OR "ANGLE PROGRAMMING " MODE 28

1.10. SEMI-AUTOMATIC MODE 36

1.11. AUTOMATIC MODE 43

1.12. TEACHING MODE 44

1.13. EDIT 47

1.14. VISUALISATION 54

1.15. DELETE 59

LAPIS SERVICES INC
(219)-464-9131
Amada Support, Rebuilds,
Sales and Fanuc Control Upgrade
AUTHORIZED CNC SYSTEM INTEGRATOR FANUC

1.16. DUPLICATE 63

1.17. SAVE 64

1.18. RESTORE 67

1.19. DATA UPDATE 70

1.20. L-ALPHA PROGRAMMING OR GRAPHICAL PROGRAMMING 74

1.21. MULTIPLE PROGRAM 92

1.22. ERROR MESSAGES 96

1.23. PROCEDURE TO MODIFY AXES ORIGIN POINT 99

LAPIS SERVICES INC
(219)-464-9131

AUTHORIZED CNC SYSTEM INTEGRATOR
FANUC

Amada Support, Rebuilds,
Sales and Fanuc Control Upgrade

LAPIS SERVICES INC
(219)-464-9131

Amada Support, Rebuilds,
Sales and Fanuc Control Upgrade

LAPIS SERVICES INC
(219)-464-9131

Amada Support, Rebuilds,
Sales and Fanuc Control Upgrade

1. THE NUMERICAL CONTROL (NC)

1.1. INTRODUCTION

FEATURES

The number of axes displayed on the N. C. screen depends upon the machine configuration.

MEMORY:
- Tools: 70 dies, 30 punches, 10 spacers, 10 holders.
- 3½" floppy disk drive: can be used as a file storage facility or as a working memory.

PROGRAM:
- Up to 6-digit program number.
- Up to 13-digit work-piece reference.
- Internal program capacity: 60 maximum.
- Maximum number of bends per program is 25 (24 in graphic mode).
- Number of programs that can be saved on floppy disc: Maximum 60 programs when saved with the library.
  When saved using export function, the only limitation is the capacity of the floppy diskette (DOS format 1.44 MB).

LAPIS SERVICES INC
(219)-464-9131

Y AXIS (For up stroking machines)

Y1, Y2 AXES (For down stroking machines)

Management of:
- Open Dead Centre (O.D.C.).
- Speed switching point (MUTE).
- Sheet pinch point (P.P.).
- End of bend (E.O.B)
- Pressure holding time.
- Distance of decompression.
- Working speed.
- Return speed.
- Force calculation in relation to work piece position.

X1, X2 AXES:

Management of:
- Backgauge position.
- Backgauge retract at P.P.
- Safety zones.
- START delay on backgauge.

Amada Support, Rebuilds,
Sales and Fanuc Control Upgrade

OTHER AXES:
- Axes R1; R2.
- Axes Z1; Z2.

This present programming manual applied to "OPERATEUR 2" Numerical Control having a colour monitor and following three programming modes.

- MANUAL 1 < simplified programming mode>.
- MANUAL 2 < angle programming mode>.
- L-ALPHA < graphical programming mode>.

DESCRIPTION OF THE THREE PROGRAMMING MODES

MANUAL 1 "Simplified programming mode".

The operator feeds in the positioning dimensions for the axes or teaches in the positions by using the remote hand wheel control situated at the operator's footswitch.

A test bend can be performed for each bend sequence.

MANUAL 2 "Angle programming mode" or "X-ALPHA" programming mode.

The N.C. calculates the depth of the tool penetration, the necessary force for bending, the backgauge position and the height of the backgauge fingers according to the programmed tool and the position of the backgauge fingers in relation to the part's length and it's position.

A test bend can be performed for each bend sequence.

GRAPHIC OR L-ALPHA PROGRAMMING

This programming mode is used to graphically program a component according to its drawing. The N.C. gradually draws the part by converting the entered data (length and angle). It then computes: the bend sequence, the bending force, the tool penetration, the backgauge position, the backgauge retract, the backgauge finger height, the position of the backgauge fingers in relation to the part's length and it's position on the machine and also the ODC* (for each bend) according to the determined bend sequence.

* ODC= Open Dead Centre.

LAPIS SERVICES INC
(219)-464-9131
AUTHORIZED CNC SYSTEM FANUC INTEGRATOR
Amada Support, Rebuilds,
Sales and Fanuc Control Upgrade

1.2. OPTIONS

Depending on the backgauge type fitted to your machine, several configurations are possible (see the drawing below):

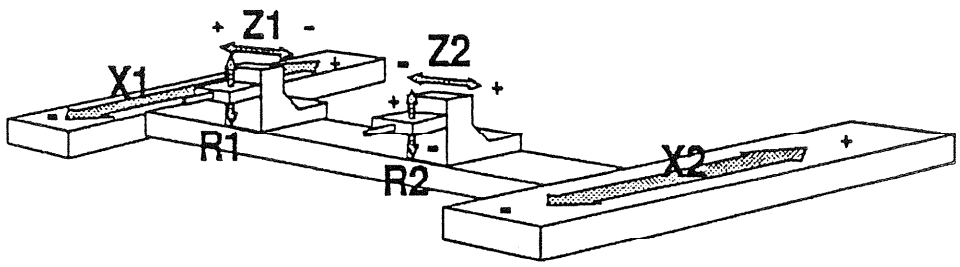

X-Axis:
- X (BA 412)
- X1; X2 (BA TF 800 or HF 700 or AP 600)

R-Axis:
- R manual (BA 412 or BA TF 800 or HF 700 or AP 600)
- R1; R2 motorised (BA 412 or BA TF 800 or HF 700 or AP 600)
- R manual + pneumatic 3 position option (BA 412 or BA HF 700 or AP 600)
- R1; R2 motorised + pneumatic 3 position option (BA 412 or BA HF 700 or AP 600)

Z-Axis:
- Z manual (BA 412 or BA TF 800 or HF 700 or AP 600)
- Z1; Z2 motorised (BA TF 800 or HF 700)

For a given backgauge, several combinations of the above options are possible, as long as they remain mechanically compatible. Our local representative is on your disposal and will be glad to clarify any queries you might have in this respect.

LAPIS SERVICES INC
(219) 464-9131
AUTHORIZED CNC SYSTEM INTEGRATOR
FANUC
Amada Support, Rebuilds,
Sales and Fanuc Control Upgrade

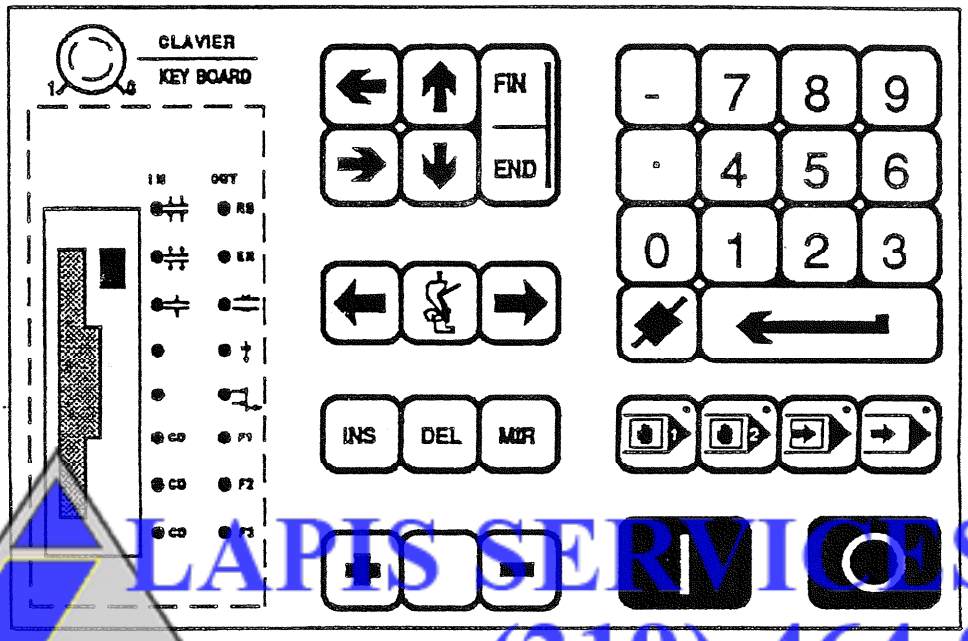

LAPIS SERVICES INC
(219)-464-9131
Amada Support, Rebuilds,
Sales and Fanuc Control Upgrade
AUTHORIZED CNC SYSTEM
FANUC
INTEGRATOR

1.3. IDENTIFICATION OF THE CONTROL FEATURES

For ease of operation, the N.C. keypad is laid out as shown in the diagram. Different groups of keys are defined as follows:

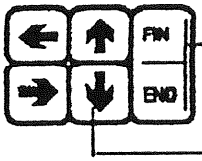

"END/FIN" key: This is used for terminating and quitting a function such as program edit.

These arrows are used for moving the cursor around on the displayed items.

These keys are used for " TURNING THE PAGE OVER" or move to next bend sequence.
"GRAPHICAL REPRESENTATION" key.

"MIR" or Mirroring key: used for programming symmetrical work-pieces.
"DEL" or delete key: This is used for deleting work-pieces or bend.
"INS" or insert key: This is used for inserting a bend.

PLUS and MINUS keys: ZOOM function, i.e. enlargement or reduction of the graphic display.
"BLANK" key: This is used to activate an alphanumerical entry This function is related to the CNC software version (refer to the appendix on page 101/102).

"NEGATIVE" key: This is for entering a negative value.
Decimal point for numeric entry via keypad.

Numerical keys: To input numerical data.

"CR" key: Carriage Return for confirming the entries made via keyboard.
Delete the field where cursor is pointing.

"MANUAL 1" Mode: Used for simplified programming.
"MANUAL 2" Mode: Used for angle programming.
"SEMI-AUTOMATIC" is an operating mode to allow corrections.
"AUTOMATIC" normal operating mode.
The above 4 modes are only accessible when machine is initialised (see page 17/102).

LAPIS SERVICES INC
(219) 464-9131
Amada Support, Rebuilds,
Sales and Fanuc Control Upgrade
AUTHORIZED CNC SYSTEM INTEGRATOR
FANUC

"START" key: Used for initiating a pre-set cycle, positioning the axes, enabling the folding process and to initialise the machine.

"STOP" key: Activation will stop all axes movement.

Key to block all access to keyboard functions except Start and Stop buttons.

Underneath the plastic flap on the left-hand side, you will find a 3" ½ floppy disk drive and the LED indicators displaying the inputs and outputs signals for ease of maintenance.

LAPIS SERVICES INC
(219)-464-9131
AUTHORIZED CNC SYSTEM INTEGRATOR
FANUC
Amada Support, Rebuilds,
Sales and Fanuc Control Upgrade

1.4. INTRODUCTION AND DESCRIPTION OF THE MENU PAGES

" GENERAL MENU" PAGE

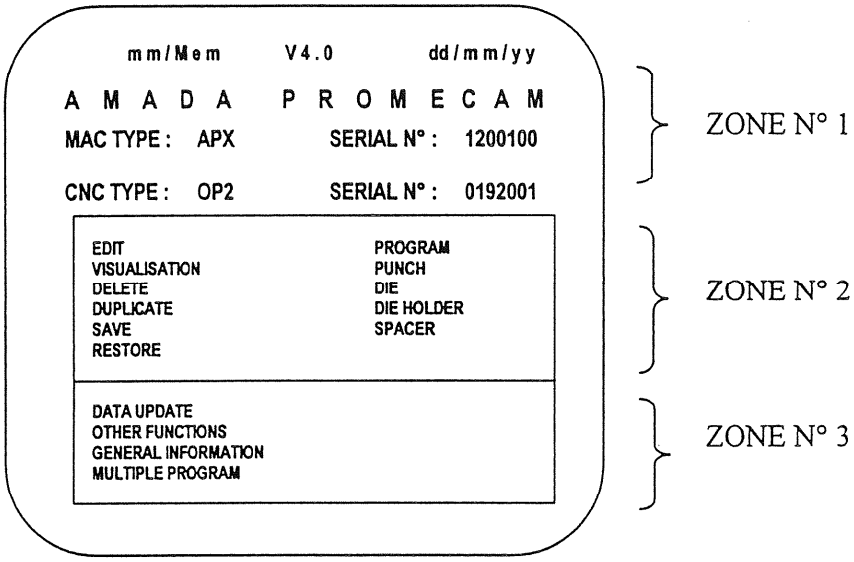

When the control panel is turned ON, the above menu page is displayed on the NC screen.

ZONE No 1 Your machine's identification, necessary for remote dialogue with a PC.

ZONE No 2 This zone consists of two families one on left and the other on right:
On your left are the command functions.
On your right are the objects where the command functions act.

LAPIS SERVICES INC
(219)-464-9131

Command functions:

EDIT: Programming or modifying a: program, punch, die, spacer or holder.

VISUALISATION: Displays the different libraries of: programs, punches, dies, spacers or holders in the memory.

DELETE: Erase one or several of the following: programs, punches, dies, spacers or holders from the NC memory.

Amada Support, Rebuilds,
Sales and Fanuc Control Upgrade

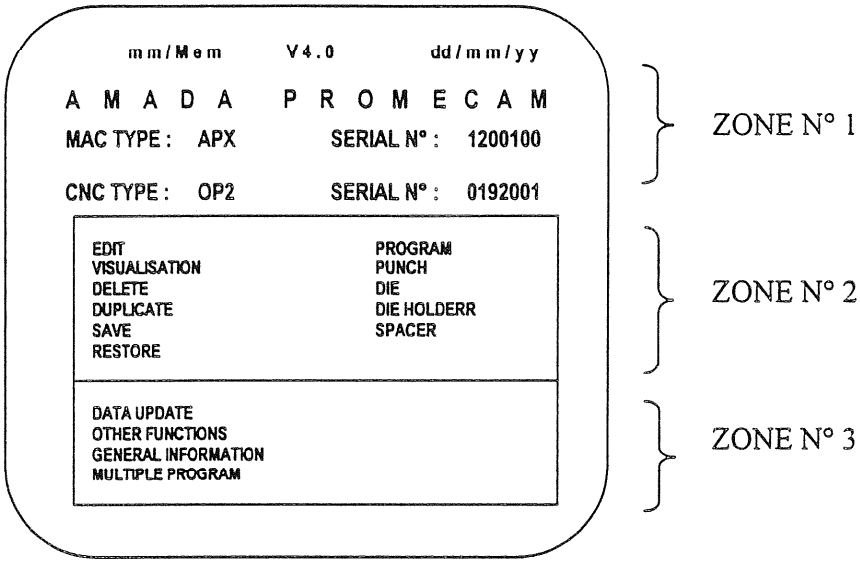

DUPLICATE: Copies an existing program in memory.

SAVE: Write programs from the memory onto a 3½" floppy disk either partially or totally.

RESTORE: Reads the contents from 3½" floppy disk and transfers this information onto the internal memory of the NC, either partially or totally depending on the selection.

Objects for command functions:

PROGRAM: Library of programs. Programs are classified in numerical order in accordance with the date of entry.

PUNCH: Library of the punches. A library of standard tools can be transferred from the 3½" disk. Special tools can be created using the control's "EDIT" "PUNCH" function.

DIES: Library of the dies. A library of standard tools can be transferred from the 3½" disk. Special tools can be created using the control's "EDIT" "DIE" function.

SPACER: Library of the spacers. A library of standard tools can be transferred from the 3½" disk. Special tools can be created using the control's "EDIT" "SPACER" function.

HOLDER: Library of the holders. A library of standard tools can be transferred from the 3½" disk. Special tools can be created using the control's "EDIT" "HOLDER" function.

LAPIS SERVICES INC
(219)-464-9131
Amada Support, Rebuilds,
Sales and Fanuc Control Upgrade
AUTHORIZED CNC SYSTEM INTEGRATOR
FANUC

ZONE N° 3 DATA UPDATE: When this function is selected, you have access to a screen page bearing the same name as shown above. This page is used for selecting the backgauge finger profile, specifying the criterion for the work-piece bend simulation and to modify the pre-set values of the divers axes. This page also enables you to choose the approach speed (max. 99.9 mm/s) and your measuring units (mm or inch).

DATA UPDATE mm / M e m dd / m m / y y

FINGER PROFIL	1
FINGER THICKNESS	5.0
FINGER LENGTH	160.0
FINGER WIDTH	25.0
SUPPORT OFFSET	50.0
FINGER TOP OFFSET	10.0
FINGER BOT. OFFSET	2.5
BEND SEQUENCE ASSIGNMENTS	
MAX INTERMEDIATE BEND BG	12
TOLERANCE ON THE EDGE	15
TOLERANCE AT 90	15
FRONT/REAR EXTENDED RATIO	0.2
OPENING MAX = 0 MIN = 1	1
O.D.C. INTO MUTE (1 = O 0 = N)	0
MAXIIMUM Z1 VALUE	1740
MAXIMUM Z2 VALUE	1740
MUTE VALUE	8
DEFAULT DX AUTO VALUE	1
(1 = a : 2 = B)	1

OFFSET Z / FLANGE END	50.0
UNITS mm → 1 / inch → 2	1
APPROACH SPEED	100

AXES	PRESETS
Y1	451.00
Y2	451.00
X1	1045.00
X2	1045.00
R1	69.00
R2	69.00
Z1	1745.00
Z2	1754.00

MATERIAL	BENDING COEF	UNFOLD COEF
STEEL	100 %	100 %
AG3	100 %	100 %
A5	100 %	100 %
STAINLESS	100 %	100 %

"Z" AXIS OFFSET / FLANGE END: This offset value only applies to the motorised "Z" axes and is the same for both Z1 & Z2 axes. It is either positive or negative with relation to the carriage's own axis (99.9-mm max. and it can only have one digit after the decimal point).
See the different programming examples given below:

LAPIS SERVICES INC
(219)-464-9131

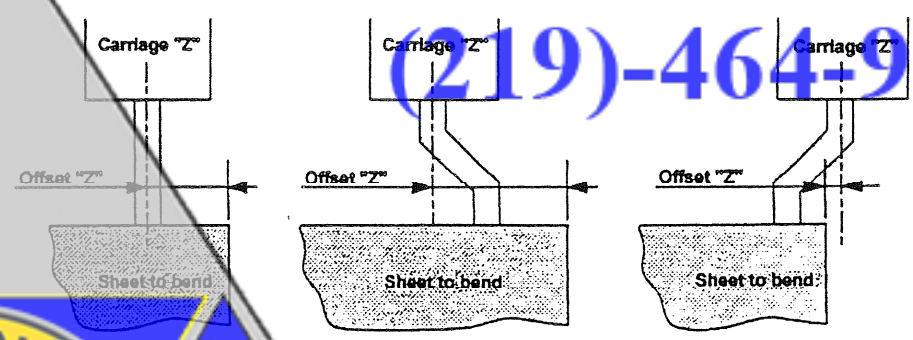

Example N° 1 **Example N° 2** **Example N° 3**

Amada Support, Rebuilds,
Sales and Fanuc Control Upgrade

Example No 1: Standard backgauge finger = "Z Offset" 50 mm.
Example No 2: Finger offset to RH. = "Z Offset" 80 mm.
Example No 3: Finger offset to LH. = "Z Offset" –10 mm.
Example of an incremental value: For a bending length = 1000 mm, "Z Offset" = 0.15. This represents 15 % absolute offset value of the bending length, i.e. 150-mm.

ZONE 3: OTHER FUNCTIONS: Selecting this provides an access to the other functions menu page, as shown below:

```
OTHER FUNCTIONS                    mm/Mem      dd/mm/yy

    PROGRAMS DISK
    PROGRAMS IN MEMORY
    SAVE PARAMETERS
    RESTORE PARAMETERS
    LOAD PROFILES
    CHANGE LANGUAGE
    FLOPPY DISK FORMAT
    EXPORT PROGRAMS
    :IMPORT PROGRAMS
    LOAD PARAMETERS PROGRAM
    LOAD MAINTENANCE PROGRAM
```

PROGRAMS DISK: This function enables you to execute all your programs directly from 3½" floppy disk.

PROGRAMS IN MEMORY: Function enabling you to revert to the N.C. memory operation after executing programs out of a floppy disk.

SAVE PARAMETERS: Writes machine parameters to a floppy disk. These parameters are essential for trouble-free operation of your machine and we recommend you to save them (machine parameters, profiles and language).

READ PARAMETERS (RESTORE): Operation allows you to restore machine parameters from the floppy disk to the N.C. memory (machine parameters, profiles and language).

LOAD PROFILES: Operation of reading the profiles from the floppy disk and writing them to the N.C. memory.

CHANGE LANGUAGE: Allows you to select and load a language from the floppy disk into the NC memory.

FLOPPY DISK FORMATING: This operation enables you to prepare your new floppy disk in order to be used on your NC control. This is a DOS function so it can be done on any PC capable of formatting 1.44Mo floppy disk and by no means exclusive to the NC controller.

LAPIS SERVICES INC
(219)-464-9131
Amada Support, Rebuilds,
Sales and Fanuc Control Upgrade
AUTHORIZED CNC SYSTEM INTEGRATOR FANUC

EXPORT PROGRAMS: This function helps you to select a directory for exporting programs and then transfer selected programs from the NC to the specified directory. The importing directory may receive programs up to the disk's capacity (FD or host computer). (See explanation on page 12/103).

IMPORT PROGRAMS: This function helps you to select a directory for importing programs (from FD or host computer) and then transfer selected programs to the importing directory of the NC. The number of imported programs cannot exceed the memory capacity of the NC (see explanation on page 13/103).

LOAD PARAMETERS PROGRAM: Used for accessing machine parameters. "SYSTEME 2" floppy disk is necessary to gain access to the machine parameters.

LOAD MAINTENANCE PROGRAM: Used for maintenance and adjustment. The floppy disk named "SYSTEME 2" will be required to gain access to the maintenance part.
This function also gives access to the balancing disk on an APX machine as well as balancing parameters & functions.
Through the language floppy, it also gives access to all the available languages.

ZONE 3: GENERAL INFORMATION: This gives access to the general information page which contains information about the content of your N.C. and allows you to change the date and time of the NC.

LAPIS SERVICES INC
(219)-464-9131

GENERAL NFORMATION mm/Mem dd/mm/yy

	EXISTING QUANTITY	MAXIMUM QUANTITY
PROGRAM	12	60
DIE	24	70
PUNCH	25	30
HOLDER	5	10
SPACER	6	10

dd / mm / yyyy Date : 20 / 12 / 1993 hh / mm / ss Time : 12 / 10 / 30

Amada Support, Rebuilds,
Sales and Fanuc Control Upgrade

EXPORT PROGRAMS: This is composed of two parts.

1) Choice of IMPORTING DIRECTORY

Once this function has been selected, the following screen is displayed on the NC:

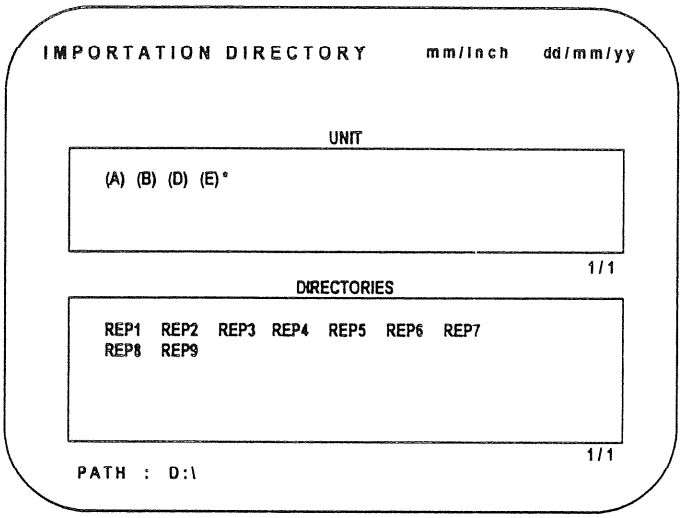

* If the machine is not in the network, only (A) & (B) will be displayed and in either case only floppy diskette will be available.

The NC moves directly to the previously defined path. Using cursor keys allows you to move cursor from one disk drive to the other or from one directory to another; page-scrolling keys are still active and will switch pages if any.

Pressing the CR key will select the disk drive in the first part of the screen and the directory in the second part. To deselect, select it once more.

Once the disk drive is selected, the available directories on this disk will be displayed in the second part of the NC screen.

Once the directory is selected, the sub-directories from the current path are displayed on the NC screen; the current path appears in the lower left corner of the screen.

The plus key will create a path from the current one; in which case, the desired path will have to be entered manually by the operator.

Pressing key END/RIN will quit this function; in which case, the message « PATH CONFIRMED? (1 = Y / 0 = N) » will appears.

If answered 1, the selected path will be stored; otherwise, previously valid path will remain valid.

LAPIS SERVICES INC
(219)-464-9131
Amada Support, Rebuilds,
Sales and Fanuc Control Upgrade
AUTHORIZED CNC SYSTEM INTEGRATOR
FANUC

2) PROGRAM SELECTION

Once the directory for exportation is selected, the screen for program selection will be displayed. Once the program(s) has / have been selected, press **END / FIN** key; in which case, the following message is displayed on the NC: ''AUTOMATIC REPLACEMENT OF THE PROGRAMS (1 = Y / 0 = N)''.

If your answer is 1, then NC will transfer all the selected programs to the exportation path and automatically replaces the existing programs.
If the answer is 0 = NO, the NC will transfer all selected programs but whenever a program exists in the destination directory, the NC will question "REPLACE EXIST (1 = Y / 0 =N)".

IMPORT PROGRAMS: This is composed of two parts..

1) Choice of IMPORTING DIRECTORY

Once this function has been selected, the following screen is displayed on the NC:

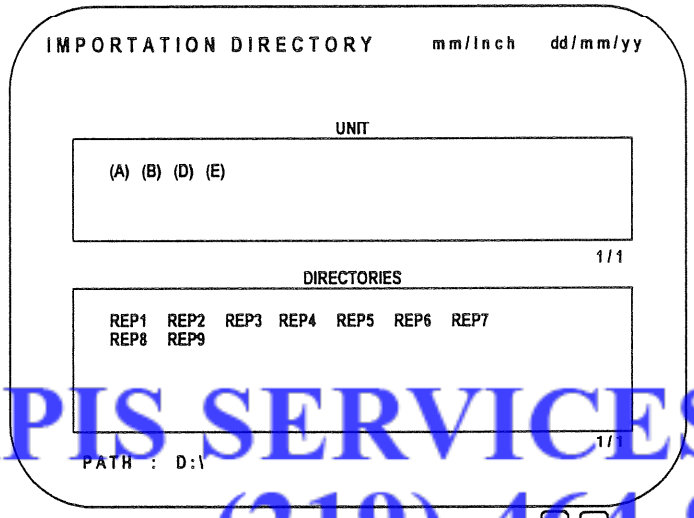

LAPIS SERVICES INC
(219)-461-9131

The NC moves directly to the previously defined path. Using cursor ⇦ ⇨ keys allows you to move cursor from one disk drive to the other or from one directory to another; page-scrolling keys ⇨ ⇦ are still active and will switch pages if any.

Pressing the CR ⏎ key will select the disk drive in the first part of the screen and the directory in the second part.

Once the disk drive is selected, the available directories on this disk will be displayed in the second part of the NC screen.

Amada Support, Rebuilds,
Sales and Fanuc Control Upgrade

Once the directory is selected, the sub-directories from the current path are displayed on the NC screen; the current path appears in the lower left corner of the screen.

The plus (+) key will create a path from the current one; in which case, the desired path will have to be entered manually by the operator.

Pressing key **END/FIN** will quit this function; in which case, the message « PATH CONFIRMED? (1 = Y / 0 = N) » will appears.

If answered 1, the selected path will be stored; otherwise, previously valid path will remain valid.

2) PROGRAM SELECTION

Once the importation directory has been selected, the following screen is displayed on the NC:

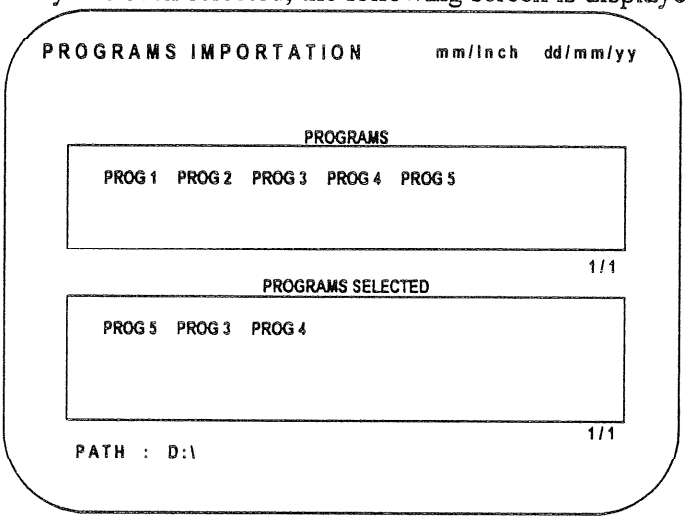

Cursor keys help moving from one program to another; keys related to pages-scrolling (next page) and (previous page) are still active and will switch pages if any.
Selected programs are displayed in the second part of the screen. Proceed as follows to select a program:

- move the cursor onto the program
- press CR

To deselect a program, choose it once more.

The path for the importation will be displayed at the lower left hand corner, by pressing the **END / FIN** key; will display the following message on the NC: ''AUTOMATIC REPLACEMENT OF THE PROGRAMS (1 = Y / 0 = N)''.

If your answer is 1, then NC will transfer all the selected programs to the importation path and automatically replaces the existing programs.

If the answer is 0 = NO, the NC will transfer all selected programs but whenever a program exists, the NC will question "REPLACE EXIST (1 = Y / 0 =N)".

Once the program transfer finished, either exportation or importation, the menu « OTHER FUNCTIONS » will reappear.

LAPIS SERVICES INC
(219)-464-9131
Amada Support, Rebuilds,
Sales and Fanuc Control Upgrade
AUTHORIZED CNC SYSTEM INTEGRATOR
FANUC

1.5. INSTALLATION – START-UP

Your OPERATOR 2 control comes with four floppy disks. The floppy disks are inserted in the drive as shown in the opposite drawing.
The floppy disk can be ejected using the eject button situated at the bottom left hand corner of the floppy drive. Eject only when the red led on the drive is off.

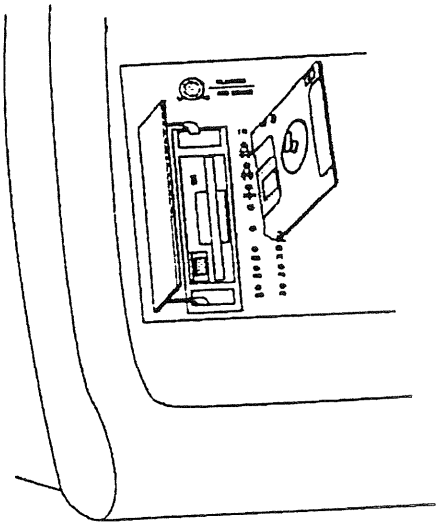

DESCRIPTION OF THE FOUR FLOPPY DISKS:

- One floppy disk is marked "SETUP SYSTEM 1", this is for maintenance us only.

- One floppy disk marked "SYSTEM 2 (486)". This contains all the libraries of punches, dies, tool holders and spacers as well as the machine parameters and maintenance and adjustment files. This floppy will be used to store all machine parameters and tooling after the installation is finished.

  We advise you to make back-up copies for the above floppy disks.

- One disk marked " DISQUETTE PROGRAMME ", pre-formatted to allow you to store your programs.

- Only in case if you got an APX machine, you will find another floppy diskette marked "DISQUETTE APCOM", this floppy disk contains balancing rack parameters, which are specific for this type of machine.
  We advise you to make a copy of this too.

During installation, in order to program in "MANUAL 2" or "L-ALPHA" mode, the N.C. needs to have libraries for punches, dies, tools holders and spacers and Amada technician will load these into the control related to your specific equipment.
For loading these at a later stage, use the "TRANSFER" function (see chapter 1.20).

> CAUTION: To eject a floppy disk from the drive wait until the red light is off to prevent damage to your floppy disk and drive.

LAPIS SERVICES INC
(219)-464-9131
Amada Support, Rebuilds, Sales and Fanuc Control Upgrade
AUTHORIZED CNC SYSTEM INTEGRATOR FANUC

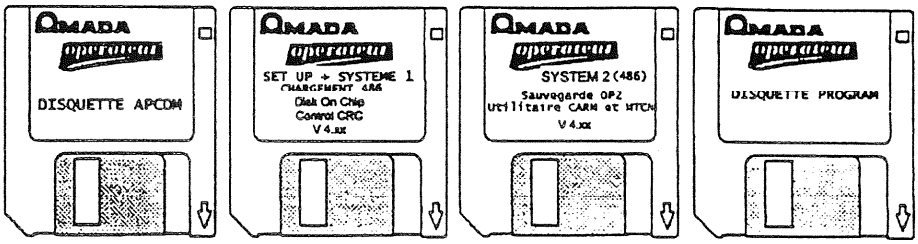

Only for APX machines

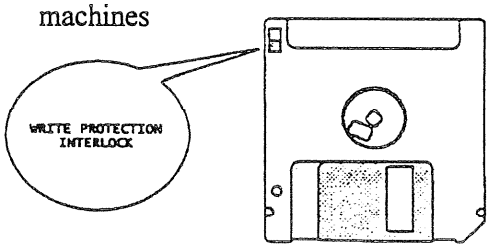

Although 3" ½ floppy disks are hard cored, some basic precautions should be observed while handling or using them.

- Keep them off the humid atmosphere.
- Do not expose them to high temperatures.
- Keep them away from magnets or other magnetic sources.
- Never touch the magnetic disk protected by the metallic sliding flap.

Don't forget to make back-up copies of the system disks ad put them away in a safe place, you will need them if you accidentally erase the data on the original ones.

LAPIS SERVICES INC
(219)-464-9131
AUTHORIZED CNC SYSTEM INTEGRATOR
FANUC
Amada Support, Rebuilds,
Sales and Fanuc Control Upgrade

1.6. MACHINE INITIALISATION

Initialisation is necessary to get access to any one of the four bending modes.

The other functions may be obtained before or after initialisation.

INITIALISATION PROCEDURE

- Turn on the main isolator switch of the machine.
- When the main menu is displayed on the NC screen:
  - Press the START key
- If the message: "RESET MACHINE, CR TO CONTINUE", is displayed:
  - Check make sure that no EMERGENCY STOP button is activated or none of the protective gates remained open.
  - Turn the motor-pump start-up key on the electric cabinet after correcting the fault, i.e. after resetting control circuit. The green light should be lit.
  - Press the key CR ⟵ to continue and then press the START key again.
- The INITIALISATION menu will then be displayed:

"PRESS OPENNING PEDAL"

- Press and keep depressed the opening footswitch until all moving axes comes to stand still.

At this stage, following message will be displayed:

"PRESS CLOSING PEDAL"

- Press closing footswitch or two-hand push button control, if selected. Maintain footswitch depressed until the back gauge axes start moving. The NC will indicate the motorised axis under initialisation X1 – X2 ...Z1 – Z2.

- Once "General Menu" appears on the screen, the initialisation process is finished.

LAPIS SERVICES INC
(219)-464-9131
AUTHORIZED CNC SYSTEMS FANUC INTEGRATOR
Amada Support, Rebuilds,
Sales and Fanuc Control Upgrade

NOTE

Pressing the NC STOP key or any emergency stop interrupts the initialisation process with all ongoing movements interrupted. The initialisation is unfinished. Hence, it will be requested again by the NC. To continue, it will be necessary to restart the initialisation process and let it finish.

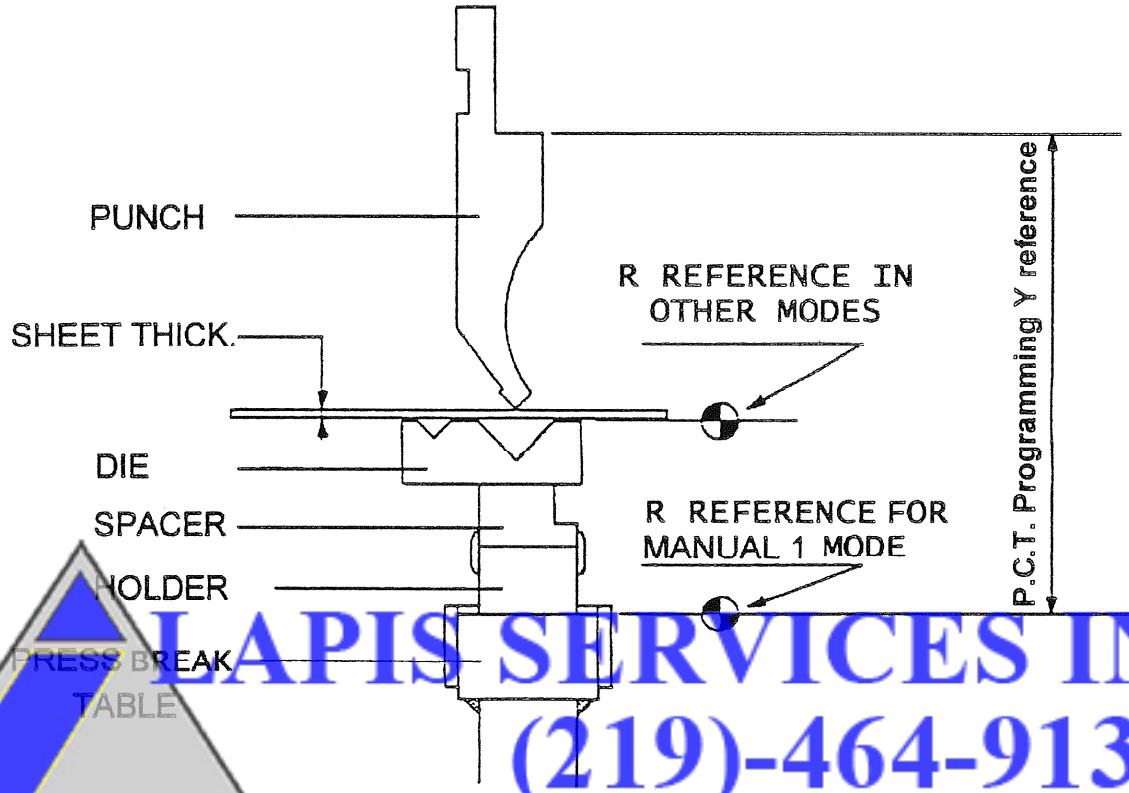

LAPIS SERVICES INC
(219)-464-9131
Amada Support, Rebuilds,
Sales and Fanuc Control Upgrade

1.7. PROGRAMMING

PRELIMINARY NOTE CONCERNING PROGRAMMING

Irrespective of the programming mode used, Y-axis programming reference point is the sheet-pinch point (P.P.). The reference value will be:

P.P. = TH + SP + DH + DIE + PUNCH

Where	TH	:	Thickness of sheet to be bent in mm.
	SP	:	Spacer height in mm.
	DH	:	Die holder height in mm.
	DIE	:	Die height in mm.
	PUNCH	:	Punch height in mm.

The "R" axis zero for programming (except in MANUAL 1 mode) corresponds to:

R Zero = SP + HD + DIE

NOTE: In "MANUAL 1" or "simplified programming" mode, "R" axis programming zero is press brake table's top as we don't program any tools.
In the any other mode, "R" axis finger's lower edge is flushed with the top of the die.

"Z" AXIS REFERENCE

The "Z" axes references are obtained in accordance with he following drawing, the zero being in the centre of the machine and coincide with machine's centre-line. Any position of the Z1-axis, to the left of the centre line is assumed to be positive value and on the right of this centre-line will be a negative value.
In case of "Z2-axis" the principle will be reversed to "Z1-axis".

LAPIS SERVICES INC
(219)-464-9131

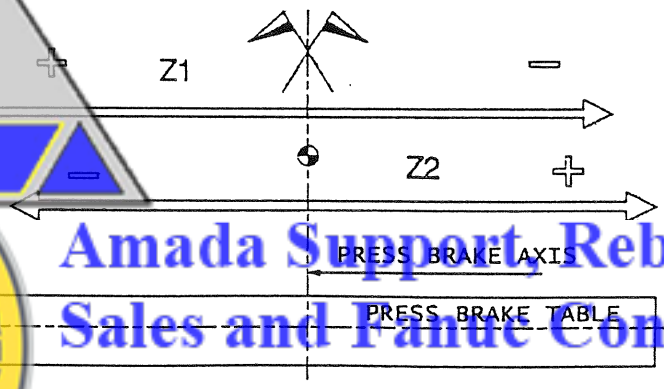

Amada Support, Rebuilds,
Sales and Fanuc Control Upgrade

The reference of X and Y-axes correspond to zero machines.

1.8. "MANUAL 1 "simplified programming" PROGRAMMING MODE

```
MANUAL MODE 1      mm/Mem      dd/mm/yy

PROG N° :                PART REF. :
PINCHING POINT :
                 :
                 : AXES      MEM POS      ACTUAL POS
BEND   :         :
BEND N :         :
                 :
        CYCLE      :      TONNAGE (t)       :
        STEP       :      END HOLD.  (s)    :
B.B. HOLD.  (s)    :      RET. DIST. (mm)   :
AUX FUNCT.         :      WAIT RET  (0/1/2) :
 COINING (0 / 1)   :      B. SPEED (mm / s):
                          R. SPEED (mm / s):
                          O.D.C.       (mm) :
```

ZONE N° 1

ZONE N° 2

ZONE N° 3

After initialising the machine with the "START" key (including pre-setting of different axes), see § 1.6, activate "MANUAL 1" mode pressing cursor key. This will display the " MANUAL MODE 1" page as shown above.

ZONE N° 1

- Enter the program numbers (max. 6 digits). If the number is already used in another mode, the NC will generate an error message otherwise display the existing programme or let you proceed with the programming.
- Enter your work-piece reference (max 13 digits), this is an optional field.
- Enter the value of the P.P. according to the tools used and the sheet thickness (see paragraph "P.P." in the previous chapter). This you can do either by entering the value or by teaching the position using remote hand wheel situated on foot switch pedestal stand.

LAPIS SERVICES INC
(219)-464-9131
AUTHORIZED CNC SYSTEM INTEGRATOR
FANUC
Amada Support, Rebuilds,
Sales and Fanuc Control Upgrade

ZONE N° 2

- Y Value: If you don't know this value, confirm the default displayed zero then you can make your bend in the teach mode (see the paragraph "TEACHING").

NOTE

The "Y"-axis value is set in respect to the P.P. You cannot program positive values: they correspond to an opening between the tools. Programming a negative value would correspond to the tool penetration into the sheet.

- Program the desired value for the "X", "R" & "Z" axes.

NOTES

Programming both axes (X1 & X2; R1 & R2; Z1 & Z2) can be done in two ways:

1) If the axis values are to be identical:

- Enter the value on the first axis (X1; R1; Z1 …), then only confirm using the CR [←] key, the same value will be copied automatically onto the second (X2; R2; Z2 ….) axes.

2) If the values are to be different:

- Enter the first value on the first axis (X1; R1; Z1 …), then move the cursor using cursor [↓] key, causing it to move onto the second (X2; R2; Z2 ….) axes without copying the previous value.
- Now enter the value for the second.

NOTE

A cursor movement whether with the CR [←] key or one of the cursor moving keys will confirm the current value in that field as long as its format corresponds to the expected value.

If the entered value is over the axis limit, the N.C. will default to the maximum or minimum limit depending on the value entered.

LAPIS SERVICES INC
(219)-464-9131
AUTHORIZED CNC SYSTEM INTEGRATOR
FANUC
Amada Support, Rebuilds,
Sales and Fanuc Control Upgrade

```
MANUAL MODE 1      mm/Mem      dd/mm/yy

PROG N° :                PART REF. :
PINCHING POINT :
.......................................................
                 AXES      MEM POS      ACTUAL POS

BEND   :
BEND N :
.......................................................
        CYCLE        :      TONNAGE (t)        :
        STEP         :      END HOLD. (s)      :
B.G. HOLD. (s)       :      RET. DIST. (mm)    :
AUX FUNCT.           :      WAIT RET (0/1/2)   :
 COINING (0 / 1)     :      B. SPEED (mm / s):
                            R. SPEED (mm / s):
                            O.D.C.       (mm) :
```

ZONE N° 1

ZONE N° 2

ZONE N° 3

ZONE N° 3 CYCLE: Number of repetition for a given cycle

1 = Bend cycle will be performed only once.

n = Bend cycle will be performed ''n'' times (max. authorised value: 99).

STEP: Distance, "X" axis will move in relation to its current position. This displacement can be programmed either positive or negative. The step is only active if the programmed cycle is greater than 1.

NOTE: The STEP will be executed ''n'' number of times. Control will check if the programmed STEP and the number "n" of CY can be performed in relation to the programmed value of the "X" axis. The value of CY "n" will be corrected automatically if it exceeds the axis limits.

LAPIS SERVICES INC
(219)-464-9131

B.G. HOLD. (s): Backgauge hold time (in seconds) before it will move to next bend position (max. 98.9 s) or if a value > 99 is programmed, the backgauge will only move when operator presses the "S" key on the hand wheel control panel.

AUX. FUNC.: There are four programmable auxiliary functions. They can be programmed in binary four digits code (Outputs F1; F2; F3 & F4).

Examples: 0000 = None of the functions are active.

0100 = Function F2 is active.

1100 = Function F1 and F2 are active.

. . . = . . .

1110 = Functions F1; F2 and F3 are active.

1111 = Functions F1; F2; F3 and F4 are active.

Amada Support, Rebuilds,
Sales and Fanuc Control Upgrade

CAUTION: Function F4 controls a work-follower interface. If activated; the beam will stop at pinch point (at contact with the sheet). This function is only used on HFBO machine.

COINING (0 / 1): Selects coining mode for bending process; coining process requires 5 times the force used in air bending.

0 = Working in air bending mode with coining inactive.

1= Working in coining mode, folding right at the bottom of the die.

TONNAGE (T): Bending force in Kilo Newton. In "Mode 1" or "Simplified Programming mode", you must program the bending tonnage, this in accordance with the tools, the material, the length of the bend and the thickness of the sheet being used (see bending chart on machine's electric cabinet).

END HOLD (s): Under pressure holding time (max 98.9 s).

If default value is accepted, the press will hold part under pressure for 200 ms.

If a value of 99 is programmed, the beam opening is only achieved at end of bend when opening footswitch is activated.

If zero is programmed, bend accuracy problem may be encountered due to lack of under pressure holding time.

RET. DIST (mm): The distance backgauge should retract at P.P. (sheet pinch point) before bend can start.

WAIT RET. (0/1/2): Backgauge retract conditions.

0 = If backgauge retract is programmed, backgauge will retract simultaneously with the start of bending.

1 = If backgauge retract is programmed, beam will reach P.P., backgauge will retract to programmed position then bend will commence.

2 = with cycle > 1 and backgauge retract programmed:

- the backgauge retract will only be executed at the end of all programmed repetitions.

B. SPEED (mm/s): Working speed of the "Y"-axis from 1 to maximum speed between P.P. to the end of bend.

R. SPEED (mm/s): "Y"-axis return speed, from end of decompression through to P.P. in slow speed then 1 to maximum speed. A zero value causes fast opening right from the end of decompression.

O.D.C. (mm): Open dead centre of the "Y"-axis. Beam opening distance in mm after executing the current bend cycle. This distance is in relation to the P.P.

LAPIS SERVICES INC
(219) 464-9131
Amada Support, Rebuilds,
Sales and Fanuc Control Upgrade
AUTHORIZED CNC SYSTEM INTEGRATOR
FANUC

After programming all the fields, you obtain a program for the bend similar to the one shown below.

```
MODE MANUAL 1            mm/Mem          dd/mm/yy

PROG N°: 100          PART REF.:  1234567890123
PINCHING POINT: 189.00
                      AXES        MEM POS        ACTUAL POS

                      Y           0              55.99
BEND   :  1           X1          50.00          609.99
                      X2          50.00          609.99
BEND N :  1           R1          65.00          70.00
                      R2          65.00          70.00
                      Z1          500.00         899.99
                      Z2          500.00         899.99

      CYCLE     : 1          TONNAGE (t)        : 400
      STEP      : 0          END HOLD           : 0.2
B.G. HOLD  (s)  : 0          RET. DIST. (mm)    : 0
AUX FUNCT.      : 0000       WAIT RET.  (0/1/2) : 0
 COINING (0 / 1) : 0         B. SPEED (mm / s)  : 9
                             R. SPEED (mm / s)  : 0
                             O.D.C.       (mm)  : 50
```

To program another bend, simply press the next bend key. All the information on the current page will be copied to a new page. Then you can modify the desired values to build your programme.

At any time, you can run through the programmed pages on the screen by using the next bend * or previous bend keys.

* WARNING: If you press the next page key while at the last bend of the programme ⇒ you will add an additional bend.

When your programme is done, press the "END / FIN" key to save the programme.

The insert and delete keys are active at all times so that you can insert or delete a bend.

LAPIS SERVICES INC
(219)-464-9131
Amada Support, Rebuilds,
Sales and Fanuc Control Upgrade
AUTHORIZED CNC SYSTEM INTEGRATOR
FANUC

This is the bend which is displayed on the screen, in our case it is bend N° 2

```
MODE MANUAL 1          mm/Mem          dd/mm/yy

PROG N° : 100          PART REF. :  1234567890123
PINCHING POINT : 189.00

                       AXES     MEM POS     ACTUAL POS
BEND   :  2            Y        -2.15       55.99
                       X1       112.50      609.99
BEND N :  3            X2       112.50      609.99
                       R1       67.00       70.00
                       R2       67.00       70.00
                       Z1       500.00      899.99
                       Z2       500.00      899.99

      CYCLE      : 1          TONNAGE (t)        : 400
      STEP       : 0          END HOLD. (s)      : 0.2
B.G. HOLD (s)    : 0          RET. DIST. (mm)    : 0
AUX FUNCT.       : 0000       WAIT RET. (0/1/2)  : 0
 COINING (0 / 1) : 0          B. SPEED (mm / s)  : 9
                              R. SPEED (mm / s)  : 0
                              O.D.C.       (mm)  : 50
```

This program contains a total of 3 bends

In MANUAL 1 mode, you should program manually the bending tonnage according to the bending chart

By changing over to "SEMI-AUTOMATIC" mode will save your programme.

Before entering the "SEMI-AUTOMATIC" mode, you will get an intermediate page displayed on the screen as shown below.

```
SEMI AUTOMATIC MODE                    mm/Mem          dd/mm/yy

                   mm        DaNm/m²                        mm
PROGRA  PART REF.  THICK.    MAT.   O    SP    CH-1   DIE R.   PUNCH R.   BD   DEVI.LG   CRE DATE
100     1234567890123                                0        0          3    0         02/01/92
```

LAPIS SERVICES INC
(219)-464-9131
AUTHORIZED CNC SYSTEM FANUC INTEGRATOR
Amada Support, Rebuilds, Sales and Fanuc Control Upgrade

Validation with the CR [←] key allows you to enter directly in the execution mode on the programme, which you have just entered (After pressing the START key off course).

The above page also enables you to choose another programme, which is already stored in the NC memory or floppy disk (when working directly out of it):

- Either by giving its number directly,
- Or by selecting the programme from the library,
- Or by a multiple-criterion search.

CHOOSING BY PROGRAM NUMBER

Input the number of the desired programme in the program number field, then confirm the selection.
If the programme exists, changeover to the "SEMI-AUTOMATIC" mode will be authorised.
If the programme does not exist, the N.C. will display the following message "UNKNOWN PROGRAM <RC> to continue". You must then press the RC [←] key to clear the message, then re-enter the another program number or choose one of the two following methods.

SELECTING A PROGRAM FROM THE LIBRARY

- Delete the programme number from the field-using [DEL] key.
- Press the cursor [↓] key twice.
- The NC will display all programmes in the library. If your program library contains more than 10 programmes, you can scroll through the pages using the page [→][←] keys.
- Select the desired programme using the cursor [↓][↑] keys, then confirm your choice to execute the program in SEMI-AUTOMATIC mode.

CHOOSING A PROGRAM USING MULTI-CRITERION SEARCH

- Enter the known information in their respective fields.
  e.g.: Ref.; Material thickness, Material, Number of bends etc.
- Then use the cursor [↓] key, to initiate the search.
- The NC will locate all programmes present in the memory, which satisfy the search criterion and will display them on the screen.

LAPIS SERVICES INC
(219)-464-9131
AUTHORIZED CNC SYSTEM INTEGRATOR FANUC
Amada Support, Rebuilds,
Sales and Fanuc Control Upgrade

- Select the desired programme using cursor ↓ ↑ keys and confirm your choice. This will bring the selected program for execution in the SEMI-AUTOMATIC mode.

> **NOTE**
> If none of the programs contained in the memory corresponds to the search criterion, then the last programme used (present in the working memory) will be choose by the NC for SEMI-AUTOMATIC mode.

SEMI AUTOMATIC MODE mm/Mem dd/mm/yy

PROGRA	PART REF.	THICK (mm)	MAT.	Ö (DaN/mm²)	SP	DH	DIE R	PUNCH R	BD	DEV.LG (mm)	CRE DATE
100	1234567890123		STEEL	40			0	0			20/01/92
123	200-134.17		STEEL	40			0	0			15/01/92
1			STEEL	40			0	0	3	0	02/01/92

LAPIS SERVICES INC
(219)-464-9131

SEMI AUTOMATIC MODE mm/Mem dd/mm/yy

PROGRA	PART REF.	THICK (mm)	MAT.	Ö (DaN/mm²)	SP	DH	DIE R	PUNCH R	BD	DEV.LG (mm)	CRE DATE
100	1234567890123		STEEL	40			0	0	3	0	02/01/92
123	200-134.17		STEEL	40			0	0	3	0	02/01/92

The search creteria given here was to search all programs present in the NC memory having 3 bends.

Amada Support, Rebuilds,
Sales and Fanuc Control Upgrade

Refer to chapter 1.10 "SEMI-AUTOMATIC mode" to know the operation.

1.9. "MANUAL 2" OR "ANGLE PROGRAMMING " MODE

```
ANGLE PROG.MODE   mm/Mem      dd/mm/yy
PROG N° :                PART REF. :
TH    SP    DH    DIE     R    PUNCH  R   MAT    Ö
-------------------------------------------------------
BEND LGTH  :   α      MEM POS        ACTUAL POS

PART D.    :

BEND       :

BEND N     :
-------------------------------------------------------
CYCLE              :   END HOLD  (s)      :
STEP               :   RET. DIST. (mm)    :
COINING  (0 / 1)   :   WAIT RET.  (0/1/2) :
TONNAGE  (kN)      :   B. SPEED (mm / s)  :
B.G. HOLD.  (s)    :   R. SPEED (mm / s)  :
AUX FUNCT.         :   O.D.C.      (mm)   :
dX AUTO  (1 / 0)   :
```

ZONE N° 1

ZONE N° 2

ZONE N° 3

The main characteristic of the "MANUAL 2 or <angle programming>" is the automatic calculation of the punch penetration into the material to give desired angle by simply programming the material type, thickness, bend length, desired angle and the tools.

ZONE No 1

- Enter the a programme number (max. 6 digits). If the entered number already exits in another programming mode, the N.C. will indicate an error, otherwise NC will call up the existing program on the display.
- Enter your job reference (max. 13 digits), this is an optional entry.

LAPIS SERVICES INC
(219)-464-9131
AUTHORIZED CNC SYSTEM INTEGRATOR FANUC
Amada Support, Rebuilds,
Sales and Fanuc Control Upgrade

- (Th): material thickness to be bent in mm.

- (Sp): Reference for the spacer. If you don't know its reference, then press cursor [↓] key, this will give you all the spacers in the NC library. Select the spacer you are using or wants to use on your machine with the help of cursor [↓] [↑] keys, then confirm your choice with RC [←] key to revert back to "MANUAL 2" programming page.
  If "0" is programmed = no spacer.

- DH: Reference of the die holder. Proceed in the same ways as for the spacer to select the die holder fitted or wants to fit to your die.
  If "0" is programmed = no holder.

- (Die): Enter the reference of the die. If the reference is unknown, then use the cursor [↓] key to display the die library.
- R: Parameter indicating reverse mounting of the die.
  0 is programmed to indicate = die is mounted normally.
  1 is programmed to indicate = die and die holder are reversed.

  NOTE: This only applies to two or four V dies, as they are the only ones that can be turned around. Turning the die around also influence NC X-axis safety calculations.

- (Punch): Enter the reference of the punch. If the reference is unknown, then use the cursor [↓] key to display the library of the punches.

- R: Parameter indicating reverse mounting of the die.
  0 is programmed to indicate = die is mounted normally.
  1 is programmed to indicate = die and die holder are reversed.

  NOTE: The punch-reverse option is only served as a reminder in MANUAL 2 mode to allow correct machine set-up at a later date. However when working on a part in the L ALPHA mode, the punch-reverse option is taken into account while calculating the bending sequences.

- Ó: Tensile strength of material to be used in DaN/mm².

LAPIS SERVICES INC
(219)-464-9131
AUTHORIZED CNC SYSTEM INTEGRATOR FANUC
Amada Support, Rebuilds,
Sales and Fanuc Control Upgrade

```
ANGLE PROG.MODE   mm/Mem      dd/mm/yy
PROG N°:                PART REF.:
TH    SP    DH    DIE     R   PUNCH  R   MAT    Ö
.......................................................
BEND LGTH  :  ∝      MEM POS        ACTUAL POS
PART D.    :
BEND       :
BEND N     :
.......................................................
CYCLE            :   END HOLD  (s)      :
STEP             :   RET. DIST. (mm)    :
COINING  (0 / 1) :   WAIT RET.  (0/1/2) :
TONNAGE  (kN)    :   B. SPEED (mm / s)  :
B.G. HOLD. (s)   :   R. SPEED (mm / s)  :
AUX FUNCT.       :   O.D.C.      (mm)   :
dX AUTO  (1 / 0) :
```

ZONE N° 1

ZONE N° 2

ZONE N° 3

ZONE No 2 • BEND LGTH : Part length in mm which is to be folded.

PART D : Part offset in respect to machine centre-line in mm (used for multi-stage bending or when bending under horns).
Input zero if you are folding your job in the centre of the machine.

NOTE: The default value is zero.

BEND: Indicates the current bends number displayed on the screen.

BEND N : Indicates total number of bends in the program.

∝ = Program value of the angle to be achieved.

SPECIAL CASE: Entering a zero angle value will give access to the teaching mode for "Y" value.

"Y" VALUE: This is calculated as soon as data for ∝ is fed in and confirmed. To gain access to Y value field, you must enter ZERO for ∝ (teaching mode).

LAPIS SERVICES INC
(219)-464-9131
AUTHORIZED CNC SYSTEM INTEGRATOR
FANUC
Amada Support, Rebuilds,
Sales and Fanuc Control Upgrade

NOTE

The "Y" axes values are set up in respect to the P.P. You cannot program a positive value in this field as they would correspond to an opening between the tools. Programming negative values corresponds to the penetration of the tool into the material.

"X" VALUE: In this field, programme external flange length if "dX AUTO" = 1, otherwise program the flange length after deducting bend allowance.

NOTE

Identical to MANUAL 1 mode, programming of double axes (X1, X2; R1, R2; Z1, Z2…) can be carried out in two ways :

1) If the values are identical, use CR [←] key.
2) If the values are different, then use the down arrow key and input desired data.

"R" VALUE: The "R" axis zero reference is the top of the die (see paragraph PRELIMINARY NOTE ON PROGRAMMING).

"Z" VALUE: The zero reference of the "Z" axis is the machine centre-line (see paragraph PRELIMINARY NOTE ON PROGRAMMING).

LAPIS SERVICES INC
(219)-464-9131
AUTHORIZED CNC SYSTEM INTEGRATOR
FANUC
Amada Support, Rebuilds,
Sales and Fanuc Control Upgrade

```
ANGLE PROG.MODE   mm/Mem      dd/mm/yy
PROG N° :                PART REF. :
TH    SP    DH    DIE     R   PUNCH  R   MAT    Ö
-------------------------------------------------------
BEND LGTH  :  | α      MEM POS        ACTUAL POS
PART D.    :  |
              |
BEND       :  |
BEND N     :  |
-------------------------------------------------------
CYCLE              :   END HOLD  (s)       :
STEP               :   RET. DIST. (mm)     :
COINING  (0 / 1)   :   WAIT RET.  (0/1/2)  :
TONNAGE  (kN)      :   B. SPEED (mm / s)   :
B.G. HOLD.  (s)    :   R. SPEED (mm / s)   :
AUX FUNCT.         :   O.D.C.       (mm)   :
dX AUTO  (1 / 0)   :
```

ZONE N° 1

ZONE N° 2

ZONE N° 3

ZONE No 3 ◦ CYCLE: Number of repetition for a given cycle

1 = Bend cycle will be performed only once.

n = Bend cycle will be performed ''n'' times (max. authorised value: 99).

NOTE

Only by programming a cycle greater than 1 enables you to program the STEP.

STEP: Distance, "X" axis will move in relation to its current position. This displacement can be programmed either positive or negative. The step is only active if the programmed cycle is greater than 1.

NOTE: The STEP will be executed ''n'' number of times. Control will check if the programmed STEP and the number "n" of CY can be performed, this in relation to the programmed value of the "X" axis. The value of CY "n" will be corrected automatically if it exceeds the axis limits.

COINING (0 / 1): Selects coining mode for bending process; coining process requires 5 times the force used in air bending.

0 = Working in air bending mode with coining inactive.

1 = Working in coining mode, folding right at the bottom of the die.

TONNAGE (T): Bending force in Kilo Newton. The bending tonnage will be calculated taking into account sheet position on the beam, the programmed bend angle, the tools, the material, the length of the bend and the thickness of the sheet being used and type of bending mode (air bending, coining or bottoming).

LAPIS SERVICES INC
(219)-464-9131
Amada Support, Rebuilds,
Sales and Fanuc Control Upgrade
AUTHORIZED CNC SYSTEM INTEGRATOR FANUC

B.G. HOLD. (s): Backgauge hold time (in seconds) before it will move to next bend position (max. 98.9 s) or if a value > 99 is programmed, the backgauge will only move when operator presses the "S" key on the footswitch control panel.

AUX. FUNC.: There are four programmable auxiliary functions. They can be programmed in binary four digits code (Outputs F1; F2; F3 & F4).

Examples: 0000 = None of the functions are active.
0100 = Function F2 is active.
1100 = Function F1 and F2 are active.
- - - = . . .
1110 = Functions F1; F2 and F3 are active.
1111 = Functions F1; F2; F3 and F4 are active.

CAUTION: Function F4 controls a work-follower interface. If activated; the beam will stop at pinch point (at contact with the sheet). This function is only used on HFBO machine.

dX AUTO (0/1): Bend allowance calculation for the worksheet thickness
1 = outside dimensions.
0 = inside dimensions.

END HOLD (s): Under pressure holding time (max 98.9 s).
If default value is accepted, the press will hold part under pressure for 200 ms.
If a value of 99 is programmed, the beam opening is only achieved at end of bend when opening footswitch is activated.
If zero is programmed, bend accuracy problem may be encountered due to lack of under pressure holding time.

RET. DIST (mm): The distance backgauge should retract at P.P. (sheet pinch point) before bend can start.

WAIT RET. (0/1/2): Backgauge retract conditions.
0 = If backgauge retract is programmed, backgauge will retract simultaneously with the start of bending.
1 = If backgauge retract is programmed, beam will reach P.P., backgauge will retract to programmed position then bend will commence.
2 = with cycle > 1 and backgauge retract programmed:
- the backgauge retract will only be executed at the end of all programmed repetitions.

LAPIS SERVICES INC
(219)-464-9131
Amada Support, Rebuilds,
Sales and Fanuc Control Upgrade
AUTHORIZED CNC SYSTEM INTEGRATOR FANUC

B. SPEED (mm/s): Working speed of the "Y"-axis from 1 to maximum speed between P.P. to the end of bend.

R. SPEED. (mm/s): "Y"-axis return speed, from end of decompression through to P.P. in slow speed then 1 to maximum speed. A zero value causes fast opening right from the end of decompression.

O.D.C. (mm): Open dead centre of the "Y"-axis. Beam opening distance in mm after executing the current bend cycle. This distance is in relation to the P.P.

After programming all the fields, you obtain a program for the bend similar to the one shown below.

```
MANUEL MODE                mm/Mem                dd/mm/yy
PROG N° :                PART REF. :
TH        SP     DH     DIE     R     PUNCH   R     MAT     Ö
1.50      0      03     130     0     220     0     STEEL
-----------------------------------------------------------------------
LG. BEND    :        : α = 135.0    MEM POS          ACTUAL POS
 900                 :
                     :
D. PART     :        : Y            - 2.21           62.83
 0                   : X1           100.00           300.00
                     : X2           100.00           300.00
                     : R1           0                - 5.00
                     : R2           0                - 5.00
BEND        : 1      : Z1           400.00           600.00
                     : Z2           400.00           600.00
BEND N      : 1      :
-----------------------------------------------------------------------
CYCLE          : 1                 END HOLD (s)       :  0.5
STEP           : 0                 RET. DIST. (mm)    :  0
COINING        : 0                 WAIT RET. (0/1/2)  :  0
TONNAGE (t)    : 113               B. SPEED (mm / s)  :  9
B.C. HOLD (s)  : 0                 R. SPEED (mm / s)  :  0
AUX FUNCT.     : 0000              O.D.C.       (mm)  :  72
dX AUTO (1 / 0) : 1
```

LAPIS SERVICES INC
(219)-464-9131

The continuation of programming process is identical to that of MANUAL 1 mode:

- Program another bending sequence with using page key.
- Modify the values of ∝, X, R or Z as well as the parameters of ZONE No 3 as required.

At any time, you can run through the programmed pages on the screen by using the next bend or previous bend * keys.

Amada Support, Rebuilds,
Sales and Fanuc Control Upgrade

* WARNING: If you press the next bend key while at the last bend of the programme ⇒ you will add an additional bend to the program.

When your programme is done, press the "END / FIN" key to save the programme.

The insert [INS] and delete [DEL] keys are active at all times so that you can insert or delete a bend.

After finishing the programming, press END / FIN key to save your program or directly pressing SEMI-AUTOMATIC key can do switching to "SEMI-AUTOMATIC" mode.
All functions described in MANUAL 1 mode for "SEMI-AUTOMATIC" are valid in "MANUAL 2" mode.

LAPIS SERVICES INC
(219)-464-9131
AUTHORIZED CNC SYSTEM INTEGRATOR
FANUC
Amada Support, Rebuilds,
Sales and Fanuc Control Upgrade

1.10. SEMI-AUTOMATIC MODE

"SEMI-AUTOMATIC" mode accessed by pressing key.
(Following examples are programmed in graphical mode and following screens are displayed by pressing graphical key).
The "SEMI-AUTOMATIC" mode is an intermediate step between programming and producing the work -piece. This mode allows you to make small corrections to your program.

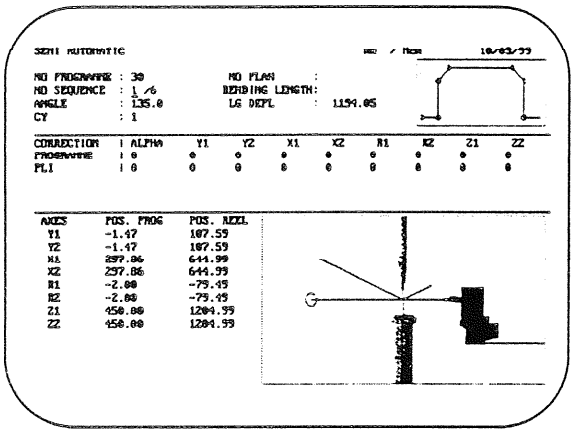

HFB only

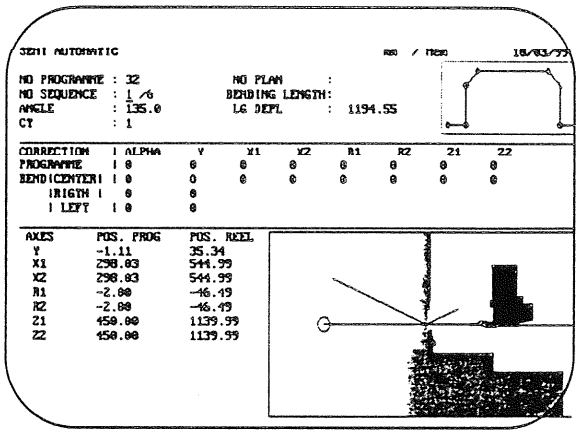

ZONE N° 1

ZONE N° 2

ZONE N° 3

APX only

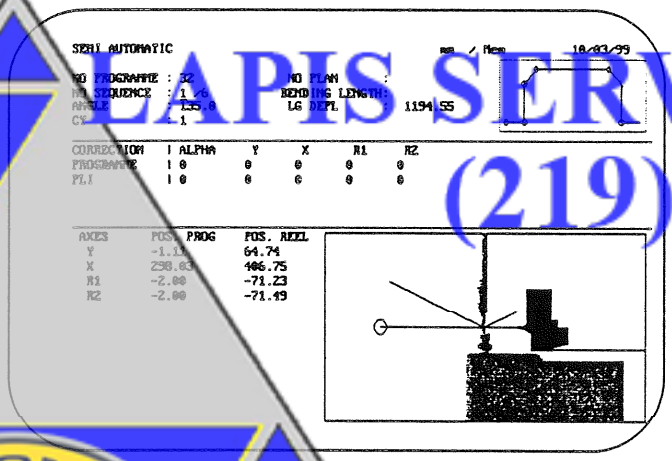

ZONE N° 1

ZONE N° 2

ZONE N° 3

ITPS 2 only

LAPIS SERVICES INC
(219)-464-9131
Amada Support, Rebuilds,
Sales and Fanuc Control Upgrade
AUTHORIZED CNC SYSTEMS
FANUC
INTEGRATOR

ZONE No 1 : The developed length can be modified if required. To access this field, press cursor key when at the field of sequence number.

Once modified, the difference between the previous and the new value will be distributed in the correction fields for X1 and X2 over all bends of the part, this in accordance with the angles.

ZONE No 2 Zone for correcting divers axes. The ALPHA correction field is not accessible for programmes created in the MANUAL 1 mode. The use of other correction fields remains identical whatever the programming mode selected.

In this zone, the displayed bend can be changed using page keys.

RULE No 1
The maximum permissible value of correction, positive or negative, is 99.999-mm.

RULE No 2
After input, as soon as the cursor is moved off the programme line, the corrections applied to an axis will be accumulated (algebraic sum) and transferred to the bend line.

RULE No 3
The corrections applied to an axis on the program line of a bend are passed on to all the bends having the same angular value within the program.

RULE No 4
The corrections applied to an axis on the bend line cancel out and replace previously entered corrections.

ZONE No 3 Zone for visualising axes position:

- PROG. POS., this column includes all the corrections applied to a programmed position.
- ACTUAL POS., this column shows the actual or real axes position (where the axes are at a given time).

LAPIS SERVICES INC
(219)-464-9131
AUTHORIZED CNC SYSTEM FANUC INTEGRATOR
Amada Support, Rebuilds,
Sales and Fanuc Control Upgrade

HFB - ITPS 2

ZONE No 1 Reminds the information related to the program. It is only possible to edit the number of the bend field in this zone. There are two methods available for you to select the bend you intend to correct.

1) Brows through your program using cursor → or ← keys.

2) With the cursor at the SEQUENCE No field directly input the bend number and confirm by pressing the CR ⟵ key or the cursor ↓ key, the NC will display the called bend on the screen.

Pressing graphic key, give access to the graphical representation of the program, which is made in (L, α) mode.

3) If the initial program is created in L α mode, altering the ''bending length'' permits an operator to use the a single program to produce parts varying in length as the NC will recalculate the penetration, bending force and Z axis position (if Z axis exists).

This is valid for all machines in the range of HFB, APX and ITPS2.

LAPIS SERVICES INC
(219)-464-9131
AUTHORIZED CNC SYSTEM FANUC INTEGRATOR
Amada Support, Rebuilds,
Sales and Fanuc Control Upgrade

APX only

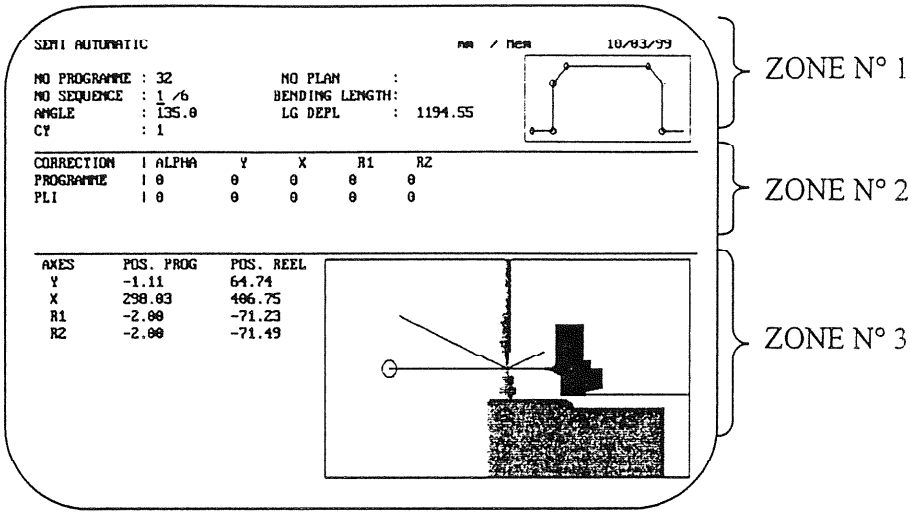

* Right and left bend corrections are only for APX.

ZONE No 1 The developed length can be modified if required. To access this field, press cursor ➡ key when at the field of sequence number.

Once modified, the difference between the previous and the new value will be distributed in the correction fields for X1 and X2 over all bends of the part, this in accordance with the angles.

ZONE No 2 Zone for correcting divers axes. The ALPHA correction field is not accessible for programmes created in the MANUAL 1 mode. The use of other correction fields remains identical whatever the programming mode selected.

In this zone, the displayed bend can be changed using page ➡ ⬅ keys.

LAPIS SERVICES INC
(219)-464-9131

RULE No 1

The maximum permissible value of correction, positive or negative is 99.999-mm.

RULE No 2

After input, as soon as the cursor is moved off the programme line, the corrections applied to an axis will be accumulated (algebraic sum) and transferred to the bend line.

RULE No 3

The corrections applied to an axis on the program line of a bend are passed on to all the bends having the same angular value within the program.

Amada Support, Rebuilds,
Sales and Fanuc Control Upgrade

RULE No 4

The corrections applied to an axis on the bend line cancel out and replace previously entered corrections.

RULE No 5
The corrections applied to a bend: always enter the centre, right and left corrections together.
The corrections applied to a program: first enter the totality of corrections on the "Program" line; at the end of the line, move the cursor to the "Bend centre" line, then immediately enter the left and right corrections (even if no corrections are needed, just press enter to confirm).

ZONE No 3 Zone for visualising axes position:

- PROG. POS., this column includes all the corrections applied to a programmed position.
- ACTUAL POS., this column shows the actual or real axes position (where the axes are at a given time).

LAPIS SERVICES INC
(219)-464-9131
AUTHORIZED CNC SYSTEM INTEGRATOR
FANUC
Amada Support, Rebuilds,
Sales and Fanuc Control Upgrade

BENDING A SMALL-SIZE WORK PIECE (APX only)

When the work piece is small and quite thick, the machine may stop and will not finish the bend cycle.

To avoid this happening, use the corrective power for the lateral cylinders.

Example:

Requested angle:	90°
Programmed position:	Y = 5,0
Centre correction	= 0
Right correction	= 0
Left correction	= 0

The machine stops at Y = 4.3.

The resulting bend is:

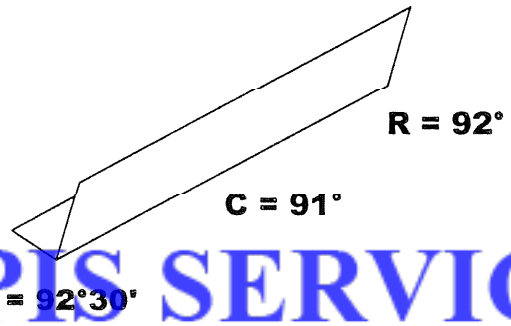

LAPIS SERVICES INC
(219)-464-9131
Amada Support, Rebuilds,
Sales and Fanuc Control Upgrade
AUTHORIZED CNC SYSTEM INTEGRATOR FANUC

To overcome this problem:

1) Modify corrections: right = - 0.2 and left = - 0.2.

   This centre correction should not be modified since the ends require closing, the centre will follow up.

   Start with a – 0.2° correction, it may be sufficient enough to end the bending operation.

2) Add corrections till you obtain the required angles.

NOTE

A correction value equal to the difference between the measured angle and the programmed angle will result in a very closed bend.

3) If the angles are correct (particularly the centre one), but the Y-axis does not reach the programmed position, then change the Y-axis reference value.

Example: Left = 89°45' Centre = 90°15' Right = 89°50'

The machine stops at Y = - 4.8

The difference is: - 5.0 – (- 4.8) = - 0.2

The original Y reference is 363.00

Replace this with the new value for Y reference = 363.00 + (- 0.20) = 362.80

4) If the Y-axis reaches the programmed position and the centre angle is correct but the angles at the ends are too closed, then reduce the corrections for right and left.

5) If the Y-axis reaches the programmed position and the parallelism is correct but the angles are not.

Example:

Required angle:	90°
Centre correction:	- 1°
Right correction:	- 0.5°
Left correction:	- 0.7°

The resulting bend is:

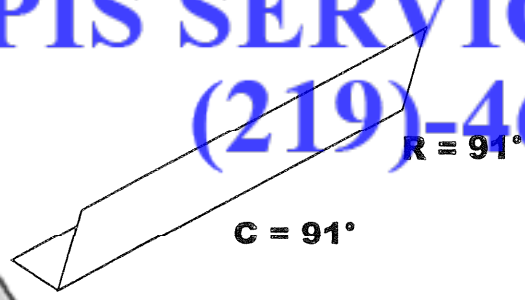

Enter the following corrections:

Centre correction:	- 2°
Right correction:	- 1.5°
Left correction:	- 1.7°

LAPIS SERVICES INC
(219)-464-9131
Amada Support, Rebuilds,
Sales and Fanuc Control Upgrade
AUTHORIZED CNC SYSTEM INTEGRATOR
FANUC

1.11. AUTOMATIC MODE

The access to "AUTOMATIC" mode is by pressing the auto key. Similar to SEMI-AUTO mode, an intermediate page will appears before displaying the "AUTOMATIC" mode page. This allows you to choose the program and produce the current job or select another one.

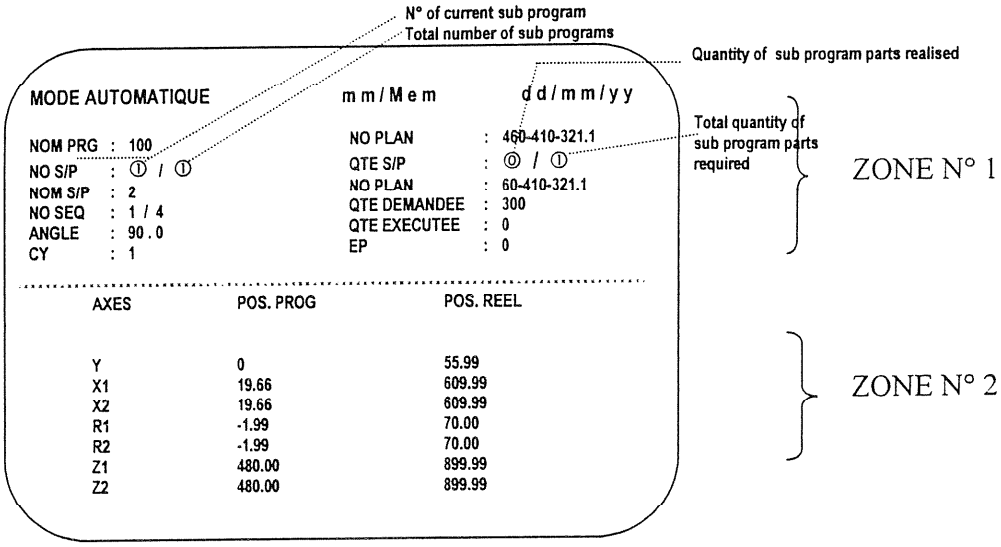

ZONE No 1 Information reminder relative to the program. In this mode, only the bend numbers, the S/P, REQUIRED QTY and QTY FINISHED can be edited.

Editing the S/P number and the bend number is accomplished in the same way as for the sequence number in the SEMI-AUTOMATIC mode.

REQUIRED QTY: Place the cursor in this field and enter the number of work-piece required.

QTY FINISHED: Enter zero if none of the parts have been produced or the number of finished parts if some are already produced.

NOTE: During the bending operation, the QTY FINISHED counters increments automatically for each finished part. When QTY FINISHED = REQUIRED QTY, the N.C. comes out of the AUTOMATIC mode and bending operation stops. The NC displays the intermediate AUTO page on the screen to allow eventual selection of another program for execution if required.

ZONE No 2 Zone for visualising axes position:

- PROG. POS., this column includes all the corrections applied to a programmed position.
- ACTUAL POS., this column shows the actual or real axes position (where the axes are at a given time).

LAPIS SERVICES INC
(219)-464-9131
Amada Support, Rebuilds,
Sales and Fanuc Control Upgrade
AUTHORIZED CNC SYSTEM INTEGRATOR FANUC

1.12. TEACHING MODE

1.12.1. DESCRIPTION OF THE REMOTE CONTROL PANEL KEYS

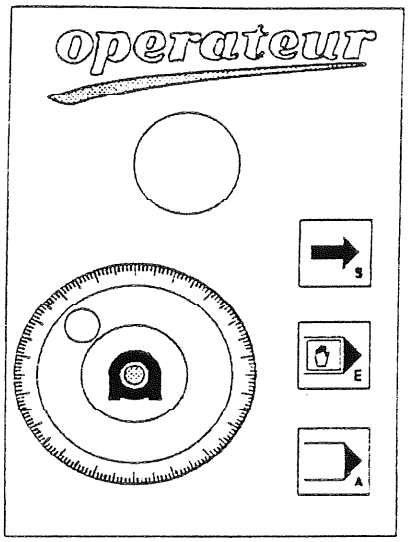

Axis selecting key for teaching. This allows selecting an axis by scrolling it down to one in question. Repeated impulsion on this key will scroll the cursor over different axes, one by one. This key also authorise quitting teach mod without modifying any value while scrolling the cursor over them.

The confirmation key, in teach mode. When teach mode is activated the selected axis is appears on the screen in reverse video. The data input is only possible when the cursor is located either on the P.P. value or on one of the axis position values while in MANUAL 1 or MANUAL 2 mode.
Depressing this key again will quit teach mode, without saving the new value and without moving the cursor.

This key permits to memorise the actual value of an axis which is displayed in reverse video and to quit teach mode while moving the cursor to next axis.
The input key for the teach mode for an axis. When teach mode is activated the selected axis is appears on the screen in reverse video. The data input is only possible when the cursor is located either on the P.P. value or on one of the axis position values while in MANUAL 1 or MANUAL 2 mode.

LAPIS SERVICES INC
(219)-464-9131
AUTHORIZED CNC SYSTEM INTEGRATOR
FANUC
Amada Support, Rebuilds,
Sales and Fanuc Control Upgrade

Functions related to keys

S	Axis selection & exit	E	Input data for 2 axes	A	Input data on 1 axis & enter teach mode
	"S" without teaching → Scroll cursor from one axis field to another. "S" in teaching process → Quit teaching without replacing actual axis values.		"E" on any one axis Teaches two axes of the same type.		"A" on AXIS 1 → axis 1 is taught "A" on AXIS 2 → axis 2 is taught "A" in teaching process → recopies the actual values in the programming zone of the corresponding axis (es).

1.12.2. TRAVEL SPEED AND DIRECTIONS OF THE AXES

	REMOTE CONTROL HAND WHEEL ROTATION (while standing in front of the machine)	
	CLOCKWISE	ANTI-CLOCKWISE
"Y" Axis	Beam will close.	Beam's starting position higher than Pinch Point: beam will open. If lower than Pinch Point: beam will open & stop at the Pinch Point.
"X" Axis	Axis will move forward (in the negative direction).	Axis will move backward (in the positive direction)..
"R" Axis	Fingers will move upward.	Fingers will move downward.
"Z" Axis	Fingers will come closer.	Fingers will move further apart.

ROTATIONAL SPEED OF THE REMOTE CONTROL HAND WHEEL

Fast rotation of the hand wheel (> 100 to 120 rpm) will move the selected axis at a smooth and constant speed. Slow incremental rotation of the hand wheel will move the selected axis accordingly.

1.12.3. TEACHING OF THE PINCH POINT IN THE MANUAL 1 MODE

Place the cursor at the P.P. value (PINCH POINT), either using cursor keys on the OPERATEUR numerical control, or the "S" key if the cursor is located on one of the axes.

Pressing once on the "E" key: the P.P. value will be shown in reverse video.
Place a sample sheet, which is to be bent in between the tooling.
Press the closing pedal: the beam does not move.
Turn the remote hand-wheel control to close the beams.
Bring down the tool tip in contact with the work sheet.
The work sheet should be pinched tightly in between the tools without being folded and you should not be able to move the work sheet, this means that you achieved the correct pinch point position.

Once you achieved satisfactory P.P., then press the "A" key on the pedestal control panel to save the beam position. You will automatically quit teach mode and the cursor will move to the next field.
Release the closing pedal.

LAPIS SERVICES INC
(219)-464-9131
Amada Support, Rebuilds, Sales and Fanuc Control Upgrade
AUTHORIZED CNC SYSTEM INTEGRATOR FANUC

1.12.4. TEACHING IDENTICAL VALUE TO BOTH AXES (R1 AND R2; X1 AND X2; Z1 AND Z2) OF THE SAME TYPE.

Enter teach mode using "E" key selects both axes values for teaching (R1 and R2; X1 and X2; Z1 and Z2).
The procedure for teaching the "Y" value is identical to the one for pinch point.
The procedure for teaching a backgauge axis is similar to the one described for teaching the P.P. with the exception that pressing the closing pedal is not necessary for moving the selected axis.

1.12.5. TEACHING TWO AXES OF THE SAME TYPE WITH DIFFERENT VALUES

The operation is as follows:
Follow the method for teaching identical values for both axes of the same type as described in § 1.12.4.
When the values are memorised with identical values, place the cursor on the axis, which should have a different value.
Enter teach mode using "E" key and apply teaching procedure only at the selected axis.

Refer to the following section only when your machine is equipped with 2 Y axes.

1.12.6. TEACHING IDENTICAL OR DIFFERENT AXES VALUES ON THE SAME TYPE (Y1 AND Y2; X1 AND X2; ...) AXES.

Entering teach mode when the cursor is located on one of the two axes of the same type (Y1; X1; ...), this will teach the same value to both axes (Y1 and Y2; X1 and X2; .....) unless modified intentionally.
The procedure for teaching the "Y1" and "Y2" is identical to the one for pinch point.
The procedure for teaching a backgauge axis is similar to the one described for teaching the P.P. with the exception that pressing the closing pedal is not necessary for moving the selected axis.

LAPIS SERVICES INC
(219)-464-9131
AUTHORIZED CNC SYSTEM INTEGRATOR FANUC
Amada Support, Rebuilds,
Sales and Fanuc Control Upgrade

1.13. EDIT

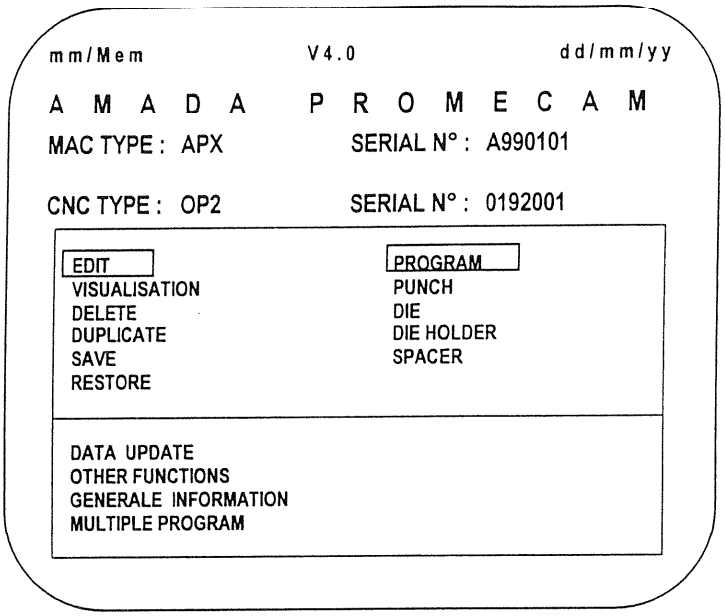

EDITING A PROGRAM

The "EDIT PROGRAM" gives access to the L-ALPHA (length & angle) programming mode (see page 68/103).

NOTE

The principle of L-ALPHA programming is common to all following modes: "EDITING a PROGRAM", "EDITING a PUNCH" and "EDITING a DIE". The angle we can program is in between 0° to 180° as in trigonometry. To determine if an angle is positive or negative, refer to the following sketch.

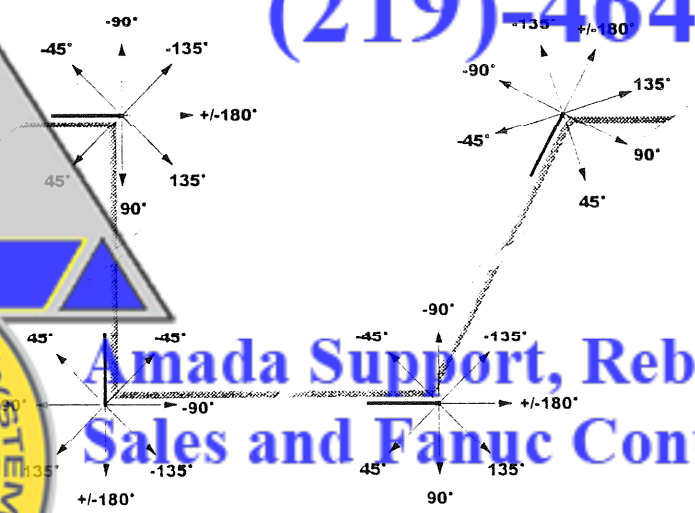

LAPISSERVICES INC
(219)-464-9131
Amada Support, Rebuilds,
Sales and Fanuc Control Upgrade
AUTHORIZED CNC SYSTEM
FANUC
INTEGRATOR

EDIT PUNCH

This selection gives access to simplified programming of special punches, which are not included in the standard library, supplied with the N.C.
The programming is very simple.

Select EDIT – PUNCH

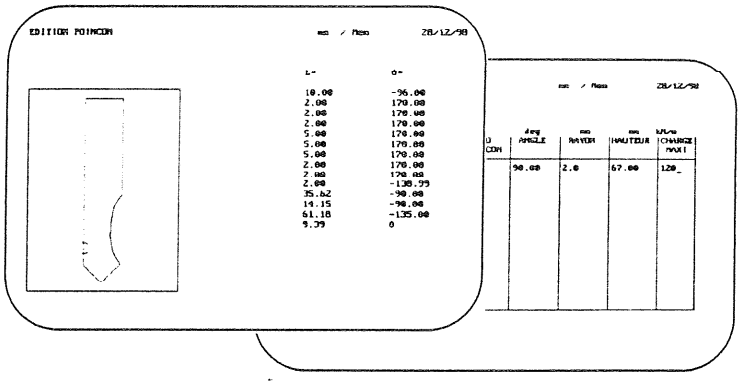

Enter - Punch reference number, (it shouldn't be a used number in the existing library).
- Punch angle in degrees.
- Punch radius in mm.
- Punch height in cm without tail. The punch height is in between punch tip to it's load bearing surface.
- Maximum permissible tonnage for the Punch in KN/m, generally marked on the punch.

After inserting each of the above data, press CR [←] key to move to next field. The cursor will prompt you for next input. Once all the fields are filled press once again, the CR [←] key, this will open up a graphical window. Here, you will be asked for length and angle information (as shown in figure below).
First, enter the information for the front half of the punch. The NC will draw simultaneously this data in the left-hand side window. Once all the data is fed for the punch front shape, press END/FIN key. This will finish the shape of the punch front half with correct height.
Then enter punch width at the top before start inputting data for the rear half of the punch (if desired). But, by *pressing END/FIN key after width input will end punch shape directly.

*** NOTE**

Use the cursor [↑] [↓] and RC [←] keys to select and edit any segments of L or Angles α for eventual corrections.

Once all data input is finished, you should obtain a page similar to that shown below. To exit, and save press the key "END/FIN" and return to the main menu.

LAPIS SERVICES INC
(219)-464-9131
AUTHORIZED CNC FANUC SYSTEM INTEGRATOR
Amada Support, Rebuilds, Sales and Fanuc Control Upgrade

DIE EDIT

Similar to the punches, the "DIE EDIT" selection is used for programming non-standard dies. Programming is carried out in accordance with the diagram below.

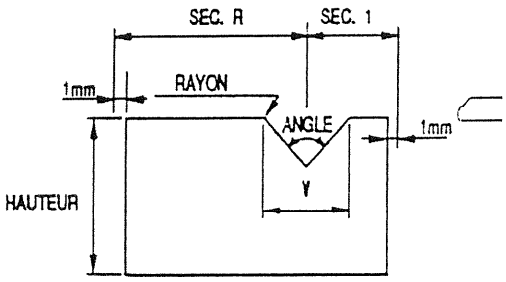

- Select EDIT – DIE and enter a reference number for the die
- Enter :
  - Die width in mm.
  - Die angle in degrees.
  - Die height in mm.
  - Safety distance (sec 1) in mm.
  - Safety distance (sec R) in mm.
  - Die edge radius (see figure)
  - Maximum permissible tonnage in KN/m

Pressing CR ⟵ key will open a graphic window and will ask for length and angle information to draw the exact profile of the die, on the left of this window, after automatically calculating the length of the 1st segment corresponding to SEC1.

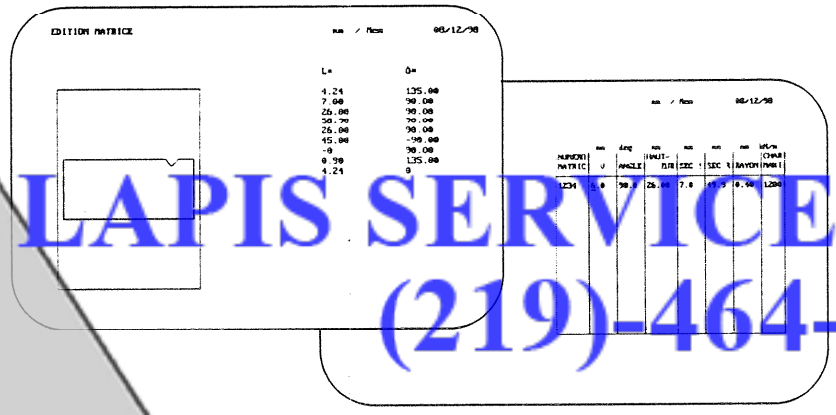

After feeding in all the information regarding the near part of the die (right hand side of the screen), *press END/FIN. This will finish the right hand side of the die shape with the correct height and width.

The left-hand side information can be fed in (if desired) then press the END/FIN key to end the data input.

> NOTE
> Same as on page 48/102.

LAPIS SERVICES INC
(219)-464-9131
Amada Support, Rebuilds,
Sales and Fanuc Control Upgrade
AUTHORIZED CNC SYSTEM INTEGRATOR FANUC

EDITING DIE-HOLDERS AND SPACERS

Note: Successive line segments represent graphical entities. The orientation of these lines is given by the angle formed between the two successive line segments. To create graphical entities such as die-holders, spacers, etc. a certain rules should be observed to allow software to function correctly.

Definition: The machine profiles consists themselves of tool profiles (or graphical entities) and are placed as bi-directional orthonormation vectors.
Bending axis is a line, which goes through the tip of the punch and parallel to the axis Y' O Y.

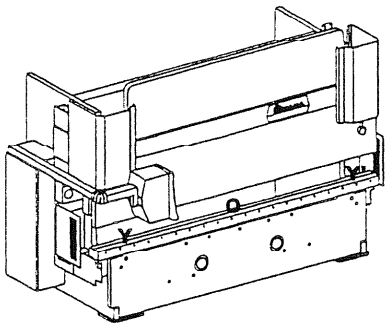

The profile data is fed in as a couple of length "L" and angle "α". This couple corresponds to a segment.

Rule for creating holders and spacers: The first segment should be perpendicular to the bending axis and should be facing left to right. The software imposes the initial angle for the profiles and the first segment is always orthogonal. The initial segment will determine where the bending axis will be passing through. To obtain a profile identical to the one mounted on the machine, it is very important that it should be taken as axis of symmetry for the first segment. In other words, the bending axis should pass through the centre of the die surface resting on die holder and also in the centre of spacer where die is resting and in the centre of the machine's lower beam where die and die-holder or die, die-holder and spacer is mounted. It is very important that the operator or the programmer ensures that the bending line is passing through the middle of the assembled profiles.

The height should correspond to the separation distance between the first segment and lowest tone.

The maximum number of segments for these graphical entities is 19.

NOTE

If the above rule is not observed, the tool mounting will not be correct therefore the axes position calculations will be incorrect and may result in possible serious damage to the tooling or the machine.

LAPIS SERVICES INC
(219)-464-9131
Amada Support, Rebuilds,
Sales and Fanuc Control Upgrade
AUTHORIZED CNC SYSTEM INTEGRATOR
FANUC

Creation

Creating, visualising and deleting functions for spacers and die-holders are also governed from the MAIN MENU; this is done in the same way as for programmes, punches and dies.

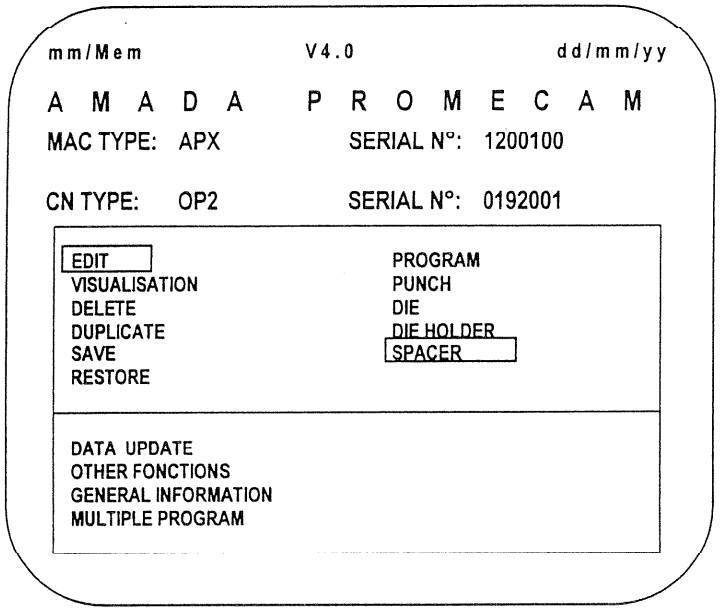

The above figure shows how to access the creating function of the spacers.

LAPIS SERVICES INC
(219)-464-9131
AUTHORIZED CNC SYSTEM INTEGRATOR
FANUC
Amada Support, Rebuilds,
Sales and Fanuc Control Upgrade

The first screen while creating spacers or die-holders is to enter the reference number and the height of the new object (see figures below).

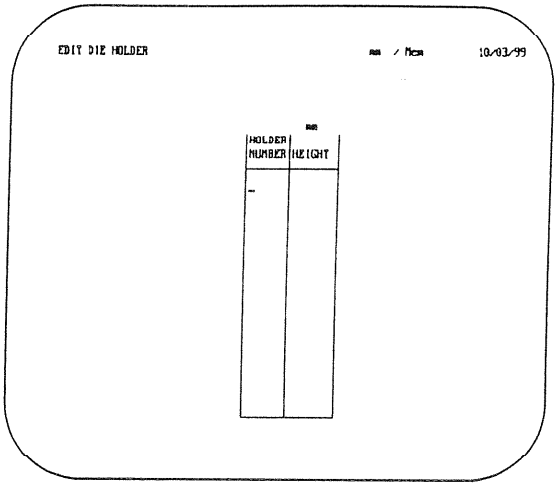

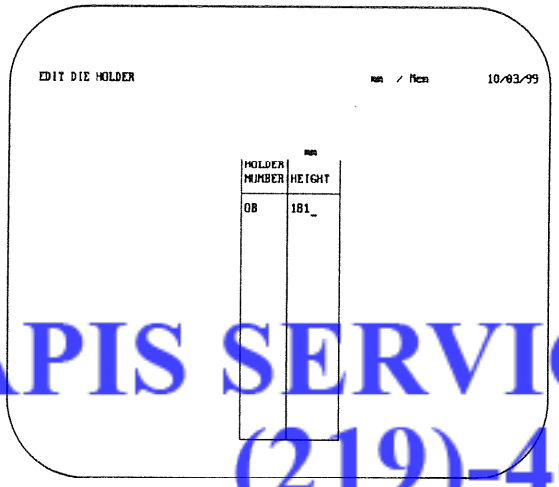

LAPIS SERVICES INC
(219)-464-9131

If the number entered corresponds to a tool already existing in the memory of the NC, the height of the tool will be fed automatically on confirming the reference number. If this is confirmed, profile of that tool is displayed on the left-hand side screen. Hence, it is impossible to create a new tool with this reference number.

To change the reference number, press any cursor keys and the displayed graphical window will then disappear from the screen together with the displayed values in the table and a blank table will be displayed; a new reference number can then be entered. If the entered number corresponds to none of the tools in the memory, then the graphical editor (as shown in the following figure) will replace this screen.

Amada Support, Rebuilds,
Sales and Fanuc Control Upgrade

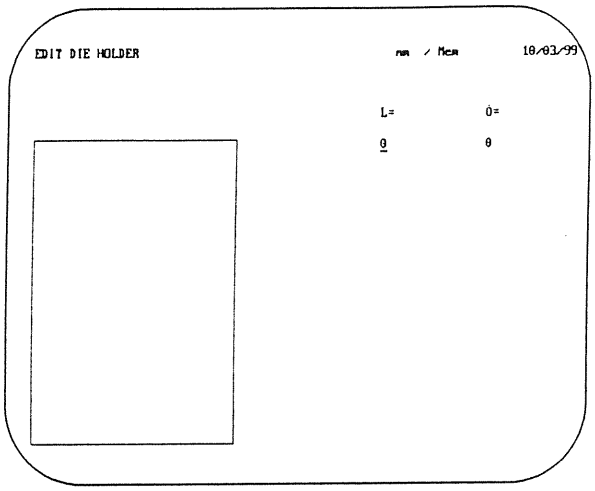

As explained before, entering L and Alpha values does tool profile creation. Simultaneously to the value input, the NC (see figures below) draws the profile.

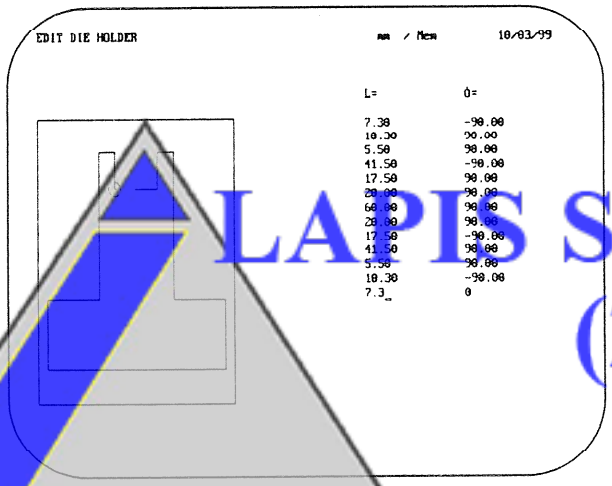

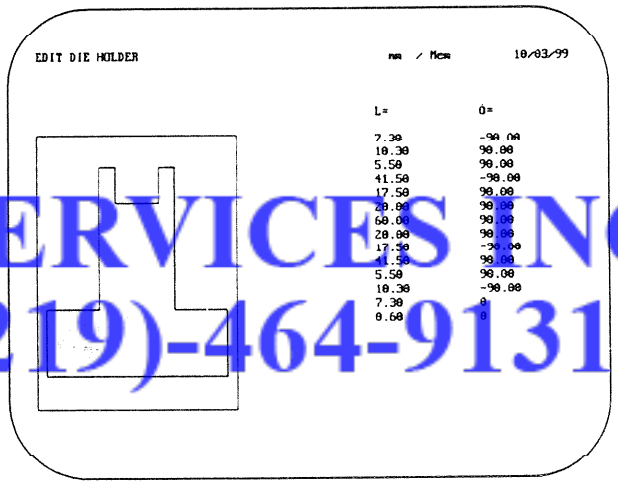

The last segment should close the profile (see above); after which, this can be used as a tool out of the NC memory and standard operations such as visualisation, deletion etc. can be applied to it.

LAPIS SERVICES INC
(219)-464-9131
AUTHORIZED CNC SYSTEM INTEGRATOR
FANUC
Amada Support, Rebuilds,
Sales and Fanuc Control Upgrade

1.14. VISUALISATION

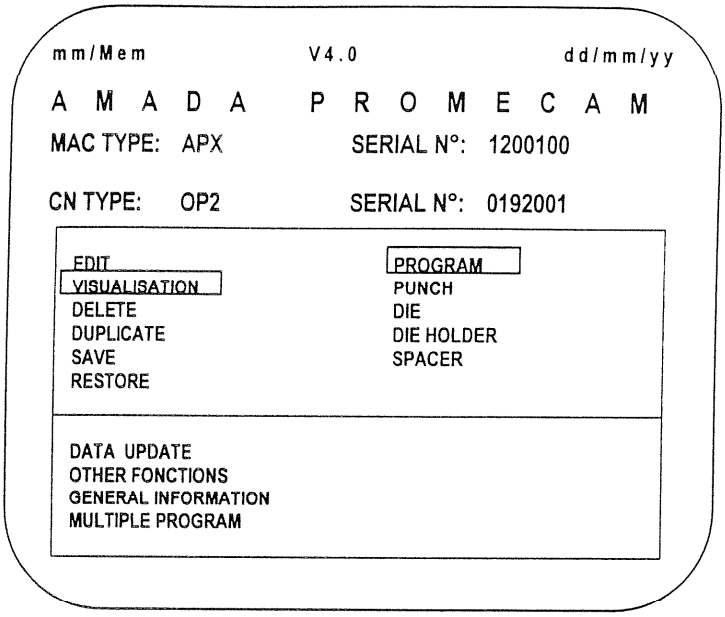

PROGRAM VISUALISATION

Selecting "PROGRAM VISUALISATION" displays the following intermediate page offering several options.

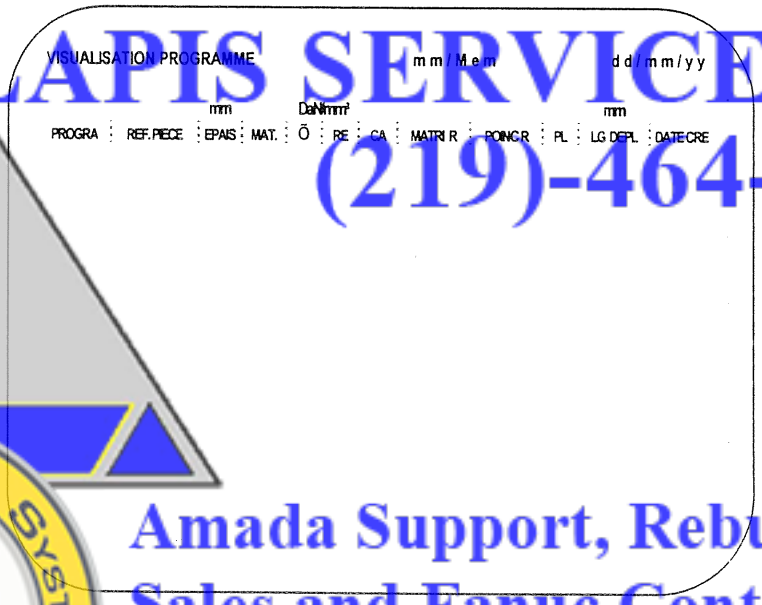

LAPIS SERVICES INC
(219)-464-9131
Amada Support, Rebuilds,
Sales and Fanuc Control Upgrade
AUTHORIZED CNC SYSTEM
FANUC
INTEGRATOR

VISUALISATION OF A PROGRAM: If you know the programme number, then enter it directly using keyboard and press the CR [⟵] key.

If the program is present in the memory, its details will be displayed on the screen, otherwise display will automatically return to the main menu. Once the program details are displayed, press once again the CR [⟵] key. You will see the bend list of the program appearing on the screen (as shown in the following figure).

VISUALISATION PROGRAM nm / Mem 10/03/99

PROGRA: 32 PART REF.: CREATION 08/07/97

D.LENGTH:1194.55 MAN.TIME:0 BEND NB.: 6

BENDCY		Y1	Y2	X1	X2	R1	R2	Z1	Z2
1	1	-1.11	-1.11	298.03	298.03	-2.00	-2.00	450.00	450.00
2	1	-2.26	-2.26	99.14	99.14	-2.00	-2.00	450.00	450.00
3	1	-2.26	-2.26	99.14	99.14	-2.00	-2.00	450.00	450.00
4	1	-1.11	-1.11	299.24	299.24	-4.00	-4.00	450.00	450.00
5	1	-1.11	-1.11	199.74	199.74	-4.00	-4.00	450.00	450.00
6	1	-1.11	-1.11	470.45	470.45	69.91	69.91	450.00	450.00

On this page, only manufacturing time value is accessible via cursor; this value is reset to 0 whenever a new program is created.

After execution of the program, this can be used to determine average part execution time (this is total time while the execution mode was active i.e. START key activated, to find average time for a part divided this by the number of parts produced).

This value can be reset at any time to 0 for a new measurement of the manufacturing time.

The "END/FIN" key brings you back to the general menu.

VISUALISING PROGRAM LIBRARY: Once on the intermediate page, pressing the cursor [↓] key will bring out all the programs present in the memory. If the number of programs are higher than ten, you have a possibility to scroll through the pages using the page [⇨] and [⇦] keys to display the entire library.

LAPIS SERVICES INC
(219)-464-9131
Amada Support, Rebuilds,
Sales and Fanuc Control Upgrade
AUTHORIZED CNC SYSTEM INTEGRATOR
FANUC

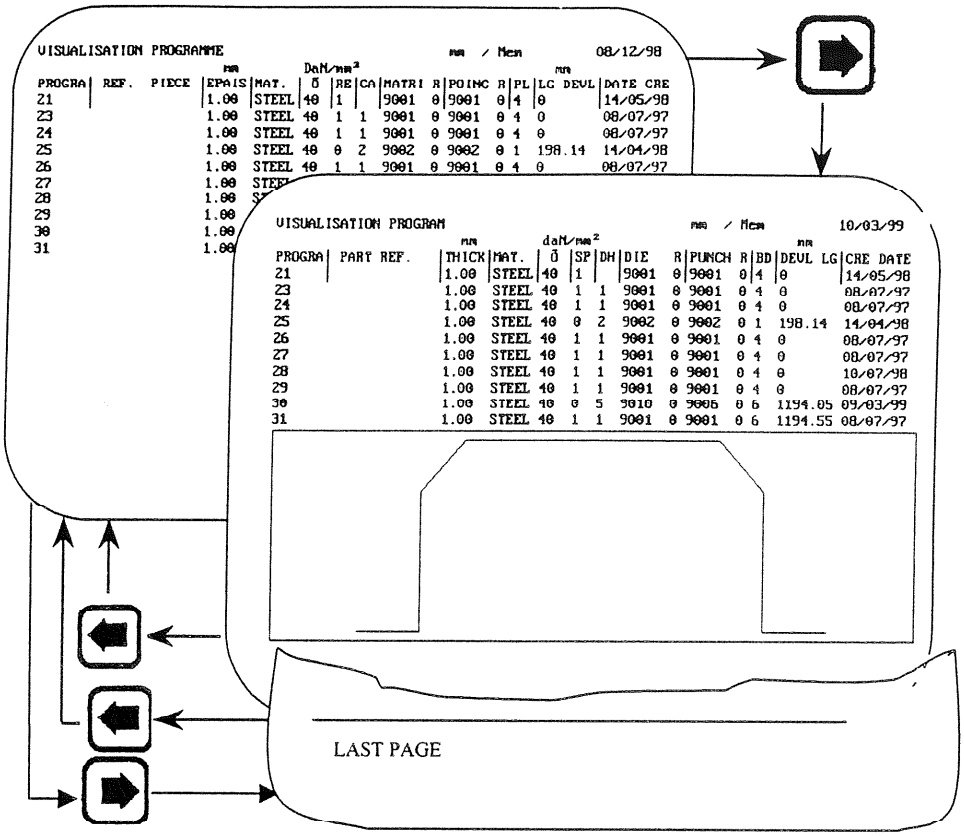

The programs are selected using cursor ↓ ↑ keys followed by the action on CR ← key, which lists the selected program.
The "END/FIN" key brings you back to the main menu.

VISUALISATION BY CRITERION: Again, from the intermediate page, you can use one or several criterions (characteristics) to search for a desired program (MAT.; PART. REF; THICK; DEVL. LG. etc.) instead of scrolling through the whole memory.

To search you fill in the desired fields and press the cursor ↓ key, the N.C. will then displays on the screen only those programs from the memory which contains the selected criteria. In this restricted list, you can easily locate by using cursor ↓ ↑ keys the program being sought after. Pressing the CR ← key will then list the contents of the selected program (as shown in the following figures).
Pressing the "END/FIN" key will bring you back to the main menu.

LAPIS SERVICES INC
(219) 464-9131
Amada Support, Rebuilds,
Sales and Fanuc Control Upgrade
AUTHORIZED CNC SYSTEM INTEGRATOR
FANUC

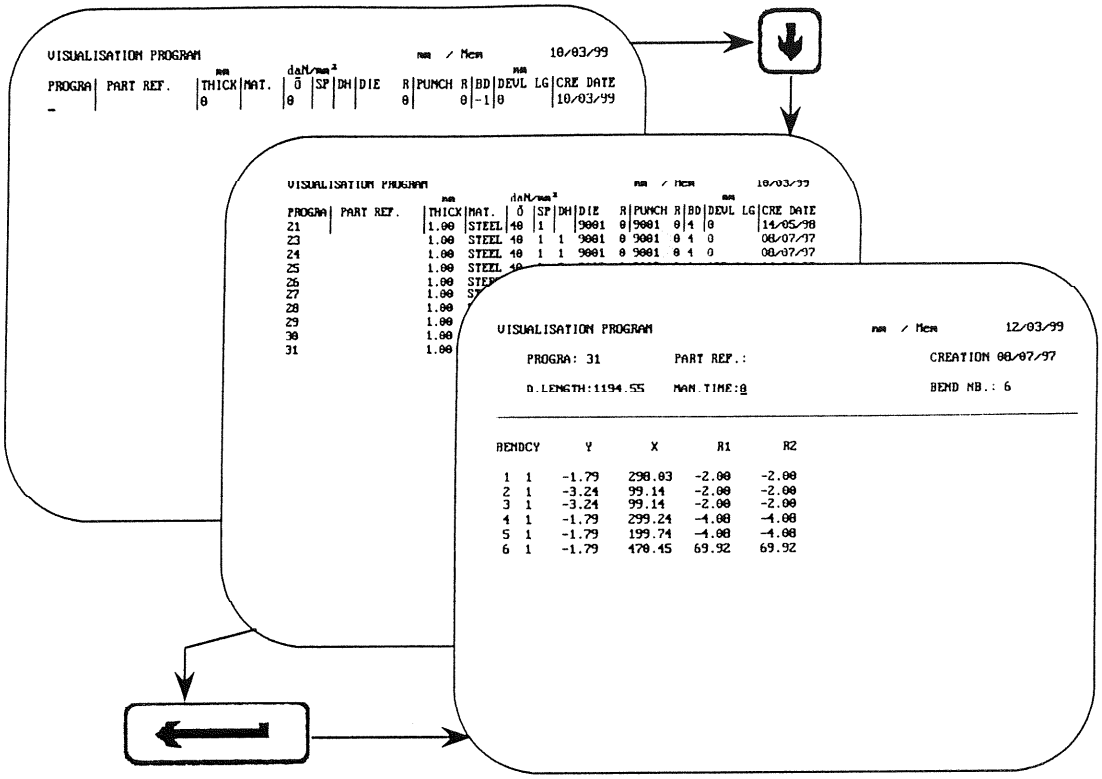

In the above example, following two criterions have been selected to look for programs: THICK = 1.0 mm and MAT. = STEEL.
Only ten programs satisfy both criterions. The selection was fairly easy.

LAPIS SERVICES INC
(219)-464-9131

PUNCH VISUALISATION

The "PUNCH VISUALISATION" enables you to consult the punch library in the NC memory (as shown in the following figure). When you scroll through, the graphical representation of the punch under cursor is displayed in the left-hand window. If your library poses more than twelve punches, you can scroll through different pages by using page ➡ and ⬅ keys.

AUTHORIZED CNC SYSTEM INTEGRATOR FANUC
Amada Support, Rebuilds,
Sales and Fanuc Control Upgrade

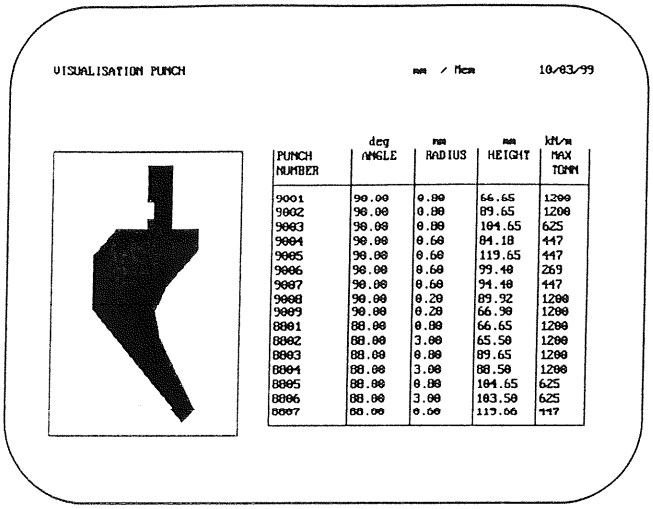

VISUALISATION PUNCH mm / Mem 10/03/99

PUNCH NUMBER	deg ANGLE	mm RADIUS	mm HEIGHT	kN/m MAX TONN
9001	90.00	0.00	66.65	1200
9002	90.00	0.00	89.65	1200
9003	90.00	0.00	104.65	625
9004	90.00	0.60	84.18	447
9005	90.00	0.60	119.65	447
9006	90.00	0.60	99.40	269
9007	90.00	0.60	94.40	447
9008	90.00	0.20	89.92	1200
9009	90.00	0.20	66.30	1200
8001	88.00	0.00	66.65	1200
8002	88.00	3.00	65.50	1200
8003	88.00	0.00	89.65	1200
8004	88.00	3.00	88.50	1200
8005	88.00	0.00	104.65	625
8006	88.00	3.00	103.50	625
8007	88.00	0.00	119.66	447

DIE VISUALISATION

Selecting "DIE VISUALISATION" enables you to refer to the die library in the same way as for punches. If your library poses more than twelve dies, you can scroll through different pages by using page ➡ and ⬅ keys.

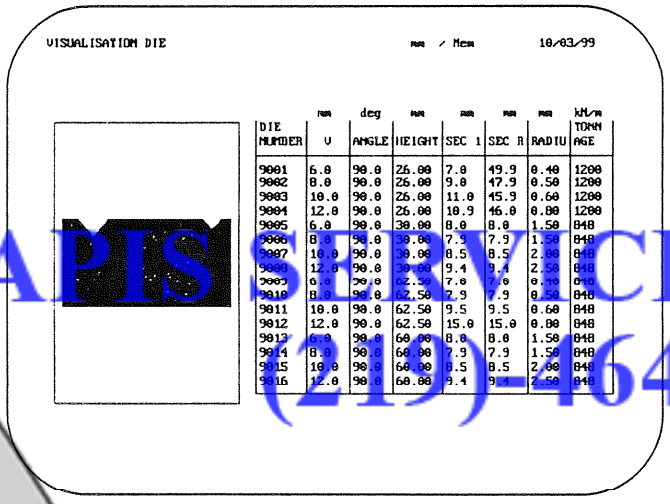

VISUALISATION DIE mm / Mem 10/03/99

DIE NUMBER	mm V	deg ANGLE	mm HEIGHT	mm SEC 1	mm SEC B	mm RADIU	kN/m TONN AGE
9001	6.0	90.0	26.00	7.0	49.9	0.40	1200
9002	8.0	90.0	26.00	9.0	47.9	0.50	1200
9003	10.0	90.0	26.00	11.0	45.9	0.60	1200
9004	12.0	90.0	26.00	10.9	46.0	0.00	1200
9005	6.0	90.0	30.00	8.0	8.0	1.50	848
9006	8.0	90.0	30.00	7.9	7.9	1.50	848
9007	10.0	90.0	30.00	8.5	8.5	2.00	848
9008	12.0	90.0	30.00	9.4	9.4	2.50	848
9009	6.0	90.0	62.50	7.0	7.0	0.40	848
9010	8.0	90.0	62.50	7.9	7.9	0.50	848
9011	10.0	90.0	62.50	9.5	9.5	0.60	848
9012	12.0	90.0	62.50	15.0	15.0	0.00	848
9013	6.0	90.0	60.00	8.0	8.0	1.50	848
9014	8.0	90.0	60.00	7.9	7.9	1.50	848
9015	10.0	90.0	60.00	8.5	8.5	2.00	848
9016	12.0	90.0	60.00	9.4	9.4	2.50	848

SPACER / DIE-HOLDER VISUALISATION

Same as above, you can visualise these graphical entities by selecting " VISUALISATION SPACERS" or " VISUALISATION DIE-HOLDERS" from the main menu. You can scroll through them in the same way as for punches, dies or programs.

LAPIS SERVICES INC
(219)-464-9131
Amada Support, Rebuilds,
Sales and Fanuc Control Upgrade
AUTHORIZED CNC SYSTEM INTEGRATOR
FANUC

1.15. DELETE

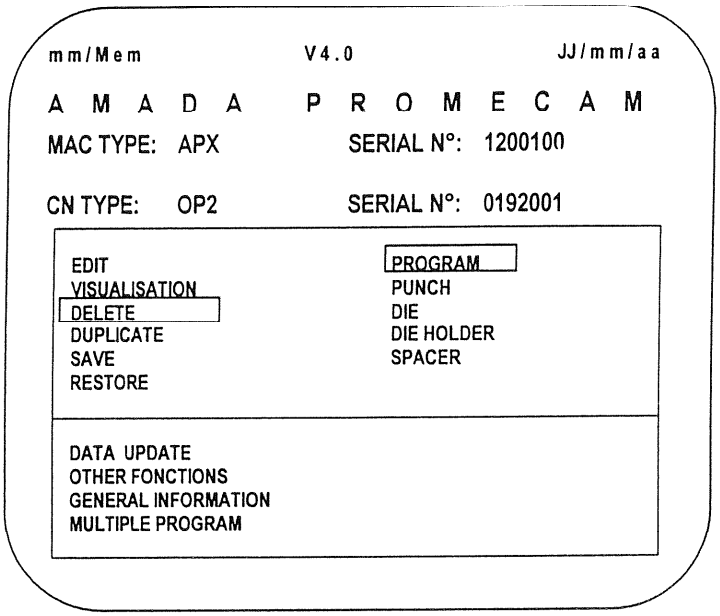

DELETING A GIVEN PROGRAM: Selecting "DELETE PROGRAM" displays a message "DELETE '1 = PARTIAL' '2 = ALL' "; with a default value of 1. To delete a selected program, just press CR ⟵ key and an intermediate page will be displayed enabling you to enter your program number.

> CAUTION: Deleting a program (programs) which is (are) part of a multiple part program is only possible if you first delete the multiple part program which contains it.

LAPIS SERVICES INC
(219)-464-9131
Amada Support, Rebuilds,
Sales and Fanuc Control Upgrade
AUTHORIZED CNC SYSTEMS INTEGRATOR FANUC

PROCEDURE:

- After obtaining the intermediate page, enter the number of the program you intend to delete and confirm your selection by using the CR ⟵ key.
- This will bring up the program from the memory and will display its characteristics on the intermediate page.
- Pressing the CR ⟵ key will enable you to select this program number, which will then be displayed in reverse video. Reverse video means that it is selected (to deselect it, press CR ⟵ key once more).
- Once selection is made, press the "END/FIN" key. This will display "DELETE CONFIRMATION? (1=Y / 0=N)" message with a default value of 0. You should enter 1 to confirm your intention to proceed then press CR ⟵ key to confirm. Program will then be deleted from memory. If you decide not to proceed at this stage then simply press

CR key to confirm zero selection. Programs will not be deleted.

- To delete a program, which is part of multiple part programs, first of all you should delete the multiple part program which includes the program in question then and only then you will be able to delete the desired program.

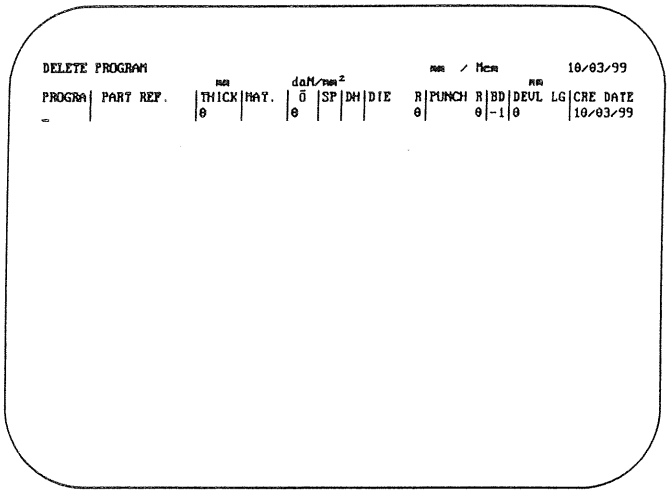

Intermediate page

DELETING SEVERAL PROGRAMS AT A TIME: After confirming partial delete, you will get the intermediate page, leave the program field empty on this page and press cursor key, this will display all the programs in NC library.

- To scroll up and down, use cursor keys and in case your library consists more than one page, use page and keys to browse through different pages.

LAPIS SERVICES INC
(219)-464-9131
Amada Support, Rebuilds,
Sales and Fanuc Control Upgrade
AUTHORIZED CNC SYSTEM INTEGRATOR
FANUC

PROCEDURE:

-Select the desired programs to be deleted by using CR key. The selected programs will then be displayed in reverse video to indicate that they are selected. To deselect, press once more CR key when cursor is pointing at it. The reverse video will disappear.

- Once selection is done, press the "END/FIN" key. This will display the following message on the screen "DELETE CONFIRMATION? (1=Y / 0=N)" with a default value of 0.
- You should enter 1 to confirm your intention to proceed then press CR key to confirm, then selected programs will be deleted from the memory.
- But if you decide not to proceed with deleting the programs then simply press RC key to confirm zero selection. In which case none of the programs will be deleted and main menu will be displayed on the screen.

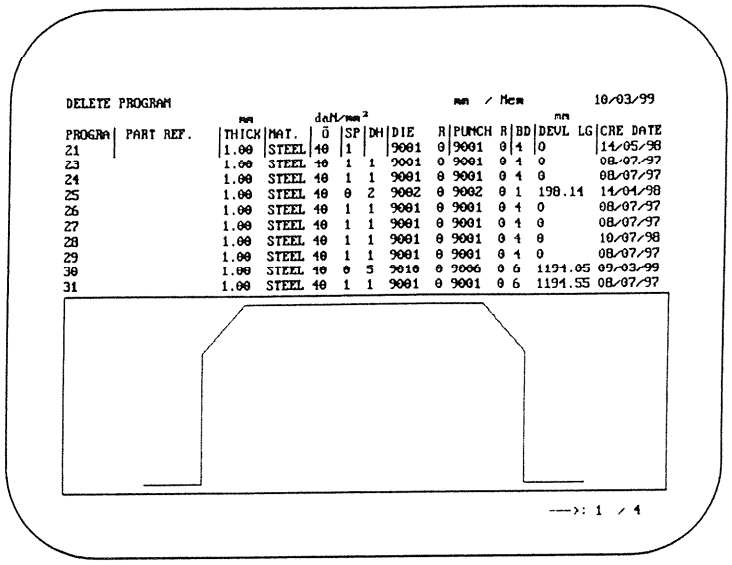

DELETE PROGRAM mm / Mcm 10/03/99

PROGRA	PART REF.	THICK (mm)	MAT.	Ö (daN/mm²)	SP	DH	DIE	R	PUNCH	R	BD	DEVL LG (mm)	CRE DATE
21		1.00	STEEL	40	1		9001	0	9001	0	4	0	14/05/98
23		1.00	STEEL	40	1	1	9001	0	9001	0	4	0	08/07/97
24		1.00	STEEL	40	1	1	9001	0	9001	0	4	0	08/07/97
25		1.00	STEEL	40	0	2	9002	0	9002	0	1	198.14	14/04/98
26		1.00	STEEL	40	1	1	9001	0	9001	0	4	0	08/07/97
27		1.00	STEEL	40	1	1	9001	0	9001	0	4	0	08/07/97
28		1.00	STEEL	40	1	1	9001	0	9001	0	4	0	10/07/98
29		1.00	STEEL	40	1	1	9001	0	9001	0	4	0	08/07/97
30		1.00	STEEL	40	0	5	9010	0	9006	0	6	1194.05	09/03/99
31		1.00	STEEL	40	1	1	9001	0	9001	0	6	1194.55	08/07/97

—>: 1 / 4

If, in the selected programs, you have a program which is used inside a multiple part program, then following message "ILLEGAL FUNCTION, PROGRAM USED <RC> TO CONTINUE" will be displayed and none of the programs will be deleted. On depressing CR [←] key, the display will return to main menu.

DELETING ALL PROGRAMS FROM THE NC LIBRARY: Selecting "DELETE PROGRAM" displays a message "DELETE '1 = PARTIAL' '2 = ALL' "; with a default value of 1.

To a delete all programs in NC library, enter 2 then press CR [←] key, the following message will then appear on the screen.

"DELETE ALL PROGRAMS? Confirm (1=Y / 0=N)" with a default value of 0.

If you intend to erase all programs in the library, then you should enter 1 to confirm your intention to proceed then press CR [←] key to confirm, then all programs from the library will be deleted.

But if you decide not to proceed, then simply press CR [←] key to confirm zero selection. None of the programs will be deleted.

LAPIS SERVICES INC
(219)-464-9131
AUTHORIZED CNC SYSTEM INTEGRATOR
FANUC
Amada Support, Rebuilds,
Sales and Fanuc Control Upgrade

DELETING ONE OR SEVERAL PUNCHES: Selecting "PUNCH DELETE" function from the general menu displays the following message "DELETE (1=PARTIAL / 2=ALL)" with a default value of 0.

If total deletion is selected (2) then all the punches from the NC library will be deleted.

If answered 1 (partial), then NC displays the punch library. Choose the punch (or punches) you want to delete using cursor [↓] [↑] keys. Use page [→] and [←] keys if your library includes more than one page.

PROCEDURE:

- Select the desired punches to be deleted by using CR [⟵] key. The selected punches will then be displayed in reverse video to indicate that they are selected. To deselect, press once more CR [⟵] key when cursor is pointing at it. The reverse video will disappear.
- Once selection is done, press the "END/FIN" key. This will display the following message on the screen "DELETE CONFIRMATION? (1=Y / 0=N)" with a default value of 0.
- You should enter 1 to confirm your intention to proceed then press CR [⟵] key to confirm, then selected punches will be deleted from the memory.
- But if you decide not to proceed with deleting the punches then simply press CR [⟵] key to confirm zero selection. In which case none of the punches will be deleted and main menu will be displayed on the screen.

NOTES:
- You cannot delete a punch, which is being used in a program unless you delete the program before.
- If, in the selected programs, you have a punch which is used inside a part program, then following message "ILLEGAL FUNCTION, PUNCH USED <RC> TO CONTINUE" will be displayed and punch (punches) will not be deleted. On depressing CR [⟵] key, the display will return to main menu.

DELETING ONE OR SEVERAL DIES: The procedure for deleting a die is exactly the same as for deleting punches with the same restrictions.

DELETING ONE OR SEVERAL DEI- HOLDERS OR SPACERS: The procedure for deleting die holders or spacers is exactly the same as for deleting punches with the same restrictions.

LAPIS SERVICES INC
(219)-464-9131
Amada Support, Rebuilds,
Sales and Fanuc Control Upgrade
AUTHORIZED CNC SYSTEM INTEGRATOR
FANUC

1.16. DUPLICATE

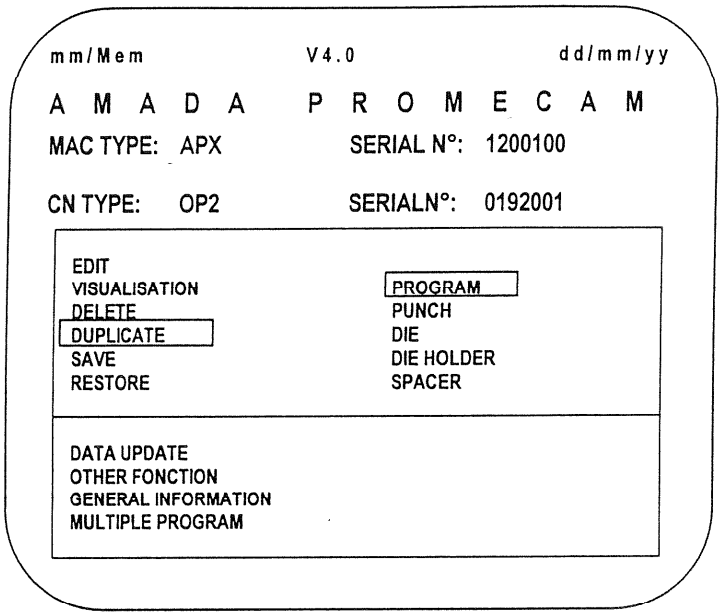

DUPLICATE PROGRAM

Selecting "DUPLICATE PROGRAM" will display a page allowing you to directly call up the program you want to duplicate.
Enter the program number which is to be duplicated then confirm. If this program exists, then its characteristics will be displayed on the screen.
Press once more CR [←] key and the program number will disappear, to permit you to enter new number under which you like to save the duplicated program. If this number is already assigned to another program in the NC memory, N.C. will display the following message "PROGRAM EXISTS <RC> TO CONTINUE".
After selecting "DUPLICATE PROGRAM", NC will display a page allowing you to directly call up the program you want to duplicate at this stage, you can also choose the program from the program library instead of entering its number directly by using cursor [↓] key, which will open the library. You can then brows around and chose the program by using cursor [↓] [↑] keys. Rest of the procedure remains unchanged.

LAPIS SERVICES INC
(219)-464-9131
AUTHORIZED CNC SYSTEM INTEGRATOR
FANUC
Amada Support, Rebuilds,
Sales and Fanuc Control Upgrade

1.17. SAVE

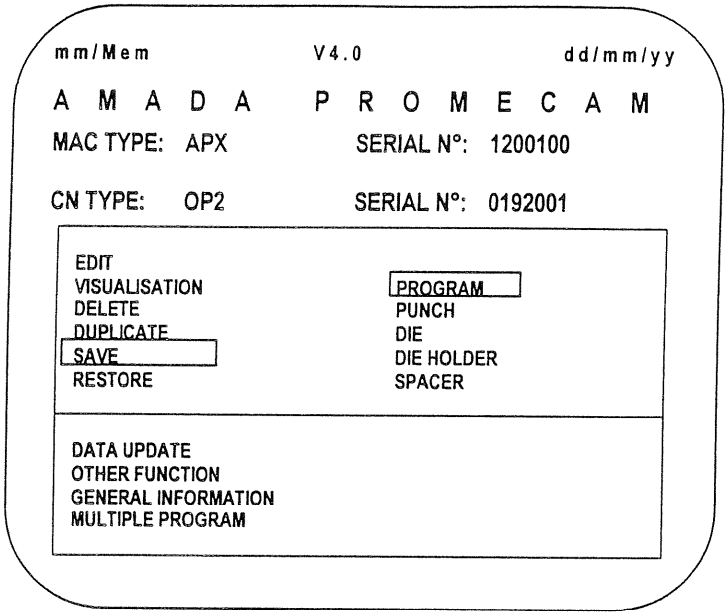

Whenever SAVE function is used in combination with program, punches, dies, die holders or spacers it registers all the details from the NC memory to a floppy diskette, with prior deletion of the files of same type present on it.

SAVING PROGRAMS

Selecting "SAVE PROGRAM" displays following message TRANSFER (1 = ALL / 2 = PARTIAL) with a default value of 0 on the screen.

If you input 1 i.e. ALL, then screen will display another message "ERASE DATA → FD CONFIRM (1 = Y / 0 = N)" with a default value of 0. If you confirm this message by entering "1" on the keyboard then pressing CR key, then N.C. will save all programs currently in program library along with all punches, dies, die holders and spacers which are present in the N.C. memory. During this process, NC will display "COMPILING, PLEASE WAIT".

At the end of this process, NC will display Main Menu on the screen.

NOTE

If the floppy disk is missing from the drive or its either damaged or have read / write protection then NC will display the following message "INSERT FD (1 = CONTINUE / 0 = QUIT)".

LAPIS SERVICES INC
(219)-464-9131
Amada Support Rebuilds,
Sales and Fanuc Control Upgrade
AUTHORIZED CNC SYSTEM INTEGRATOR
FANUC

Selecting "SAVE PROGRAM" displays following message TRANSFER (1 = ALL / 2 = PARTIAL) with a default value of 0 on the screen.

If you input 2 i.e. PARTIAL, then screen will display another message "ERASE DATA → FD CONFIRM (1 = Y / 0 = N)" with a default value of 0. If you confirm this message by entering "1" on the keyboard then pressing CR [←] key, then N.C. will open an intermediate page allowing you either to enter directly the number of program you intend to save and press CR [←] key or to open up the library by pressing cursor [↓] key.
If you enter the number directly and press CR [←] key, the characteristics of the program will be displayed if this program exists, otherwise screen will directly return back to main menu.
Once characteristics are displayed, you should select this program by pressing once more the CR [←] key and the number will be displayed in inverse video. Press FIN / END key and this will save the program on the floppy disk. During this process, NC will display "COMPILING, PLEASE WAIT" and at the end of this process, NC will display Main Menu on the screen.

If you open up the library by pressing cursor [↓] key, all the files in the memory will be displayed on the screen.
Use cursor [↓] [↑] keys to browse around the page and select the required program then confirm your choice by using CR [←] key. The number will be displayed in inverse video. You can browse through different pages of your library using page [→] and [←] keys and select other programs. Once you have selected all the programs you wish to save, then press the "END/FIN" key and this will display "END CONFIRMATION? (1=Y / 0=N)" with a default value of 0. If you insert 1, the selected programs will be on the floppy disk. During this process, NC will display "COMPILING, PLEASE WAIT".
If a selected program already exists on the floppy, then NC will display "EXIST, REPLACE? (1=Y / 0=N)" with a default value of 0. If you want to replace existing program then enter 1 and press CR [←] key, otherwise just press [←] key to confirm default 0 value. In the first case, program will be overwritten in the second it will skip and at the end of storing process, NC will display Main Menu on the screen.

> CAUTION: To remove a floppy disk from the drive, wait until the read / write indicator light is off. Failures to do so could damage your floppy disk or drive.

LAPIS SERVICES INC
(219) 464-9131
Amada Support, Rebuilds,
Sales and Fanuc Control Upgrade
AUTHORIZED CNC SYSTEM INTEGRATOR
FANUC

SAVING PUNCHES

The procedure to save a punch or punches is identical to the one described for saving programs except you will be obliged to choose from the library.
If you select All, all punches in the N.C. library will be saved.

SAVING DIES

The procedure to save a die or dies is identical to the one described for saving programs except you will be obliged to choose from the library.
If you select All, all dies in the N.C. library will be saved.

CAUTION: Do not remove a floppy disk from the drive if the read / write indicator light is ON and wait until its gone OFF. Failures to do so could damage your floppy disk or drive.

SAVING DIE HOLDERS / SPACERS

The procedure to save a die holder / spacer or die holders / spacers is identical to the one described for saving programs except you will be obliged to choose from the library.
If you select All, all die holders / spacers in the N.C. library will be saved.

LAPIS SERVICES INC
(219)-464-9131
AUTHORIZED CNC SYSTEM INTEGRATOR
FANUC
Amada Support, Rebuilds,
Sales and Fanuc Control Upgrade

1.18. RESTORE

```
mm/Mem                    V4.0                    dd/mm/yy

A M A D A    P R O M E C A M
MAC TYPE:  APX            SERIAL N°:  1200100

CN TYPE:   OP2            SERIAL N°:  0192001

EDIT                                  PROGRAM
VISUALISATION                         PUNCH
DELETE                                DIE
DUPLICATE                             DIE HOLDER
SAVE                                  SPACER
RESTORE

DATA UPDATE
OTHER FUNCTIONS
GENERAL INFORMATION
MULTIPLE PROGRAM
```

Whenever RESTORE function is used in combination with program, punches, dies, die holders or spacers it registers all the details from a floppy diskette to the NC memory, with prior deletion of the files of same type present on it.

RESTORING PROGRAMS

Selecting "RESTORE PROGRAM" will display following message "TRANSFER (1 = ALL / 2 = PARTIAL)" with a default value of 0 on the screen.

If you input 1 i.e. ALL, then screen will display another message "ERASE DATA → FD CONFIRM (1 = Y / 0 = N)" with a default value of 0. If you confirm this message by entering "1" on the keyboard then pressing CR [←] key, then N.C. will restore all programs currently on the floppy disk to the NC along with all punches, dies, die holders and spacers which are present on the floppy disk. During this process, NC will display "COMPILING, PLEASE WAIT".
At the end of this process, NC will display Main Menu on the screen.

NOTE

If the floppy disk is missing from the drive or its either damaged or have read / write protect on then NC will display the following message "INSERT FD (1 = CONTINUE / 0 = QUIT)".

LAPIS SERVICES INC
(219)-464-9131
Amada Support, Rebuilds,
Sales and Fanuc Control Upgrade
AUTHORIZED CNC SYSTEM INTEGRATOR
FANUC

Selecting "RESTORE PROGRAM" displays following message TRANSFER (1 = ALL / 2 = PARTIAL) with a default value of 0 on the screen.

If you input 2 i.e. PARTIAL, then screen will display another message "ERASE DATA → FD CONFIRM (1 = Y / 0 = N)" with a default value of 0. If you confirm this message by entering "1" on the keyboard then pressing CR [←] key, then N.C. will open an intermediate page allowing you either to enter directly the number of program you intend to restore and press CR [←] key or to open up the floppy disk library by pressing cursor [↓] key.

If you enter the number directly and press CR [←] key, the characteristics of the program will be displayed if this program exists, otherwise screen will directly return back to main menu.

Once characteristics are displayed, you should select this program by pressing once more the CR key and the number will be displayed in inverse video. Press FIN / END key and this will restore the program to the NC memory. During this process, NC will display "COMPILING, PLEASE WAIT" and at the end of this process, NC will display Main Menu on the screen.

If you open up the library by pressing cursor [↓] key, all files stored on the floppy disk will be displayed on the screen.

Use cursor [↓] [↑] keys to browse around the page and select the required program then confirm your choice by using CR [←] key. The number will be displayed in inverse video. You can browse through different pages of the floppy disk library using page [→] and [←] keys and select other programs. Once you have selected all the programs you wish to restore, then press the "END/FIN" key and this will display "END CONFIRMATION? (1=Y / 0=N)" with a default value of 0. If you insert 1, the selected programs will be restored to NC memory. During this process, NC will display "COMPILING, PLEASE WAIT".

If a selected program already exists in the NC library, then NC will display "EXIST, REPLACE? (1=Y / 0=N)" with a default value of 0. If you want to replace existing program then enter 1 and press [←] key, otherwise just press [←] key to confirm default 0 value. In the first case, program will be overwritten in the second it will skip and at the end of storing process, NC will display Main Menu on the screen.

> CAUTION: Do not remove a floppy disk from the drive if the read / write indicator light is ON and wait until its gone OFF. Failures to do so could damage your floppy disk or drive.

LAPIS SERVICES INC
(219)-464-9131
Amada Support, Rebuilds,
Sales and Fanuc Control Upgrade
AUTHORIZED CNC SYSTEM INTEGRATOR
FANUC

RESTORING PUNCHES

The procedure to restore a punch or punches is identical to the one described for restoring programs except you will be obliged to choose from the library.
If you select All, all punches will be restored from the floppy to the N.C. library.

RESTORING DIES

The procedure to restore a die or dies is identical to the one described for restoring programs except you will be obliged to choose from the library.
If you select All, all dies will be restored from the floppy to the N.C. library.

CAUTION: Do not remove a floppy disk from the drive if the read / write indicator light is ON and wait until its gone OFF. Failures to do so could damage your floppy disk or drive.

RESTORING DIE HOLDERS / SPACERS

The procedure to restore a die holder / spacer or die holders / spacers is identical to the one described for restoring programs except you will be obliged to choose from the library.
If you select All, all die holders / spacers will be restored from the floppy to the N.C. library.

LAPIS SERVICES INC
(219)-464-9131
AUTHORIZED CNC SYSTEM INTEGRATOR
FANUC
Amada Support, Rebuilds,
Sales and Fanuc Control Upgrade

1.19. DATA UPDATE

```
mm/Mem                    V4.0                    dd/mm/yy

A M A D A   P R O M E C A M
MAC TYPE:  APX            SERIAL N°:  1200100

CN TYPE:   OP2            SERIAL N°:  0192001

EDIT                                  PROGRAM
VISUALISATION                         PUNCH
DELETE                                DIE
DUPLICATE                             DIE HOLDER
SAVE                                  SPACER
RESTORE

DATA UPDATE
OTHER FUNCTIONS
GENERAL INFORMATION
MULTIPLE PROGRAM
```

```
DATA UPDATE                                   mm  / Mem        10/03/99

   FINGER PROFILE: 1                          OFFSET Z/FLANGE END    :50.00
                                              UNIT mm->1 / inch->2   :1
      FINGER THICKNESS :5.0                   APPROACH SPEED         :100
      FINGER LENGTH    :225.0
      FINGER  WIDTH    :30.0                      AXES        PRESETS
      SUPPORT OFFSET   :91.5                      Y1           472.00
      FINGER TOP OFFSET:5.0                       Y2           472.00
      FINGER BOT.OFFSET:2.5                       X1           1050.00
   BEND SEQUENCE ASSIGNEMENTS                     X2           1050.00
      MAX INTERMEDIATE BEND DG :12                R1           67.00
      TOLERANCE ON THE EDGE    :15                R2           67.00
      TOLERANCE AT 90          :15                Z1           1205.00
      FRONT EXTENDED RATIO     :0.2               Z2           1205.00
      OPENING MAX=0,MIN=1      :1                 MATERIAL | BEND  | UNFOLD |
      O.D.C INTO MUTE(1=Y,0=N) :0                 |        | COEF  | COEF  |
                                                  |        |       |       |
      MAXIMUM Z1 VALUE.....: 1205.00              | STEEL  | 100 % | 100 % |
      MAXIMUM Z2 VALUE.....: 1205.00              | ALU1   | 100 % | 100 % |
      MUTE VALUE...........: 6                    | ALU2   | 100 % | 100 % |
      DEFAULT DX AUTO VALUE: 1                    | STAIN. | 100 % | 100 % |
      F.D UNIT(1_A / 2_B)..: 1
```

LAPIS SERVICES INC
(219)-464-9131

This page allows you to modify and personalise certain data for your NC controller. The possibilities are briefly described below:

Finger profile:
The profiles related to your machine' backgauge fingers are loaded at the factory. You can select the one you want to use. These profiles can not be edited, only selected from the stored library (see sketch below).

Amada Support, Rebuilds,
Sales and Fanuc Control Upgrade

Finer profile 2 Finer profile 1

Bend sequence assignments:

1. Max. intermediate bend BG:
   This allows you to indicate to NC how many intermediate bends are acceptable to you between backgauge finger and the current bend. The smallest number will give the highest accuracy of the flange as the error accumulated due to tolerance will be less (see sketch below).

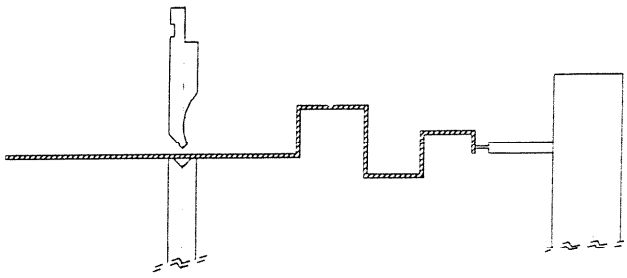

2. Tolerance on the edge:
   This can be programmed to any value in between 0° to 45°, which allows the finger to gauge at an angle other than 0°. Having zero will limit the NC possibilities to determine automatically bend sequences but the gauging accuracy will be higher (see sketch below).

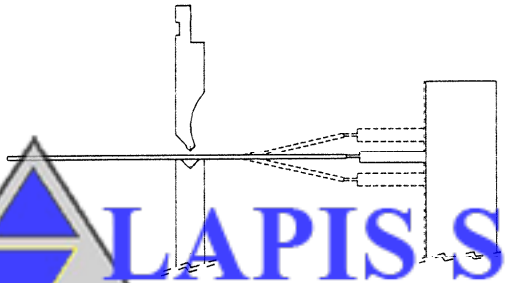

LAPIS SERVICES INC
(219)-464-9131

3. Tolerance at 90°:
   This can be programmed to any value in between 0° to 45°, which will allow the finger to gauge at an angle other than 90°. Having zero will limit the NC possibilities to determine automatically bend sequences but the gauging accuracy will be higher (see sketch below).

Amada Support, Rebuilds,
Sales and Fanuc Control Upgrade

4. Front extended ratio:
   This is the ratio, which will determine what length of material should remain in front for the operator to hold the part. This ratio is a percentage of the material length in decimal e.g. 0.2 means 20% of the total length. If you reduce it to minimum, you will have maximum possibilities of finding automatic bend sequence but the operator will hardly have any material to hold and gauging will be impossible (as shown in the sketch below).

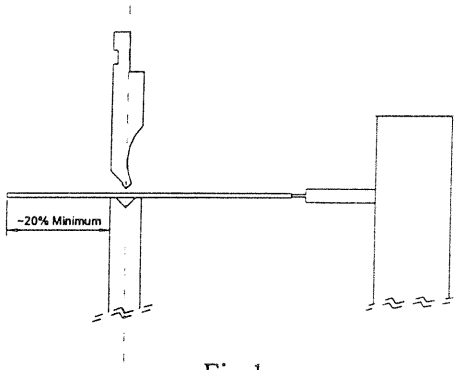

Fig:1

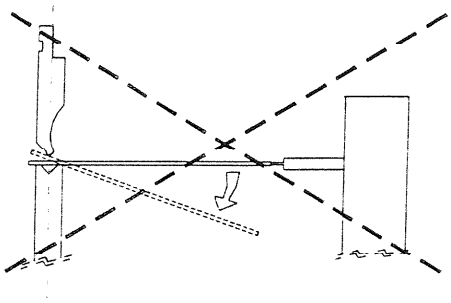

Fig:2

5. Opening Max. = 0, Min. = 1:
   This gives the beam opening. If you program ''1'', NC will calculate the minimum opening which will allow you to extract folded part (Fig 1).
   But if you program ''0'', NC will calculate beam opening equal to bent flange length.
   The later one is programmed when folding heavy material where handling is done using overhead crane to extract material after folding (Fig 2).

6. ODC into mute (1 = Y, 0 = N)
   When it is programmed to ''1'', the beam opening will be less than mute value. This is used when you are folding successive bends and material only need to be pushed against backgauge to carry out next bend.

7. Maximum Z1 and Z2 values:
   This is the maximum value Z1, Z2 can achieve i.e. Z1, and Z2 software limits values.

8. Mute value:
   This is the safety value where commutation of speed will take place. Amada recommended a minimum of 6 mm (safety distance above sheet) and with this value you can have maximum safety and minimum cycle time. If you program higher value, machine will operate in working speed during this and cycle time will be increased.

9. Default DX auto value:
   Default value is ''1'' and only applicable for programs made in mode 2. This allows you to choose internal or external quotations for a given program. Any change will only take effect in new programs only.
   The existing programs will remain as they are.

10. F.D unit (1_A / 2_B):
    Disk drive selector depends on hardware configuration of the NC and should not be tampered with. Only authorised personnel are to intervene.

LAPIS SERVICES INC
(219)-464-9131
AUTHORIZED FANUC CNC SYSTEM INTEGRATOR
Amada Support, Rebuilds, Sales and Fanuc Control Upgrade

11. Offset Z / Flange end:
    If the value is larger than or equal to 1, this will be the ''Z Offset'' in mm / inches from the edge of the programmed bend length at each end.
    If it is less than ''1'', then the value will be in % of the programmed bend length at each end.
    If the programmed value is higher than 0.5 i.e. 50%, then the axes limits will be applied automatically.
    If the offset value Z < 1 → offset = % bending length
    If the offset value Z > 1 → offset = programmed value

12. Units mm->mm / inch -> 2:
    This allows to select metric or imperial system of measures. Default value is 1.

13. Approach speed:
    This is the maximum approach speed, for certain applications, it can be reduced. Off course, in this case, cycle time will be increased.

14. Pre-set axes values:
    These should not be tampered with as they control all origin values for the axes and are used for all calculations on the machine. Only authorised personnel are to intervene on these.

In the lower right hand corner of the screen, there is a three-column table:
First column gives the materials treated inside the software.
Next column is for the percentage correction of the bending co-efficient related to each type of material, which is valid for all bends and programs.
Last one is the unfold correction applied to these materials and it corrects the developed length of the program.
These percentages modify the penetration and developed length value by acting directly on the calculation module of the bending software.

Let's consider as an example a given part in mild steel: if the NC calculates a penetration value of 5 mm for a given bend, the operator have a choice of taking only a percentage of this value. Programming 10 in the table in front of «STEEL» will change the calculated penetration to 0.5 mm.

Any percentage value less than 100 % will reduce the penetration and any percentage over 100 % will increase it.

LAPIS SERVICES INC
(219)-464-9131
AUTHORIZED FANUC SYSTEM INTEGRATOR
Amada Support, Rebuilds,
Sales and Fanuc Control Upgrade

1.20. L-ALPHA PROGRAMMING OR GRAPHICAL PROGRAMMING

''OPERATEUR 2'' N.C. offers the user ''L-ALPHA or graphical programming'' mode.

The ''OPERATEUR 2''with colour screen increases the efficiency, facilitates the programming and offers a user-friendly dialogue.

REMINDER OF THE DESCRIPTION FOR GRAPHIC PROGRAMMING

The L-ALPHA or graphic programming mode permits the operator to program work-piece directly from the part drawing. The OPERATEUR 2 control draws simultaneously the work-piece as the data is entered. In addition to the parameters which are required for realising the part, it also determines the bend sequence in which to realise the part.

LAPIS SERVICES INC
(219)-464-9131
AUTHORIZED CNC SYSTEM INTEGRATOR
FANUC
Amada Support, Rebuilds,
Sales and Fanuc Control Upgrade

L-ALPHA OR GRAPHICAL PROGRAMMING

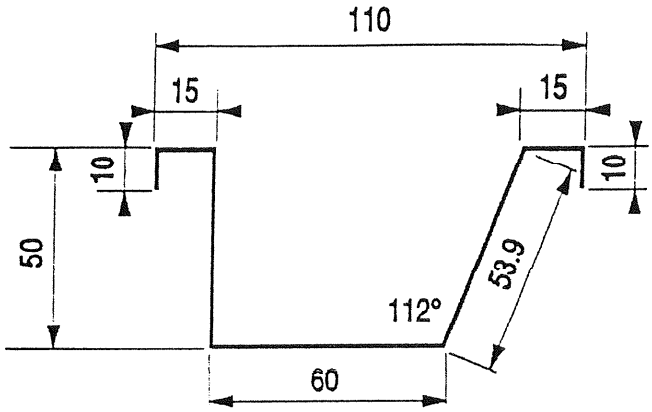

Programming in this mode is very simple. Let's program the work-piece shown above by using 1-mm thick mild steel plate.

You can access ''L-ALPHA programming mode'' by selecting "EDIT PROGRAM" from the main menu.

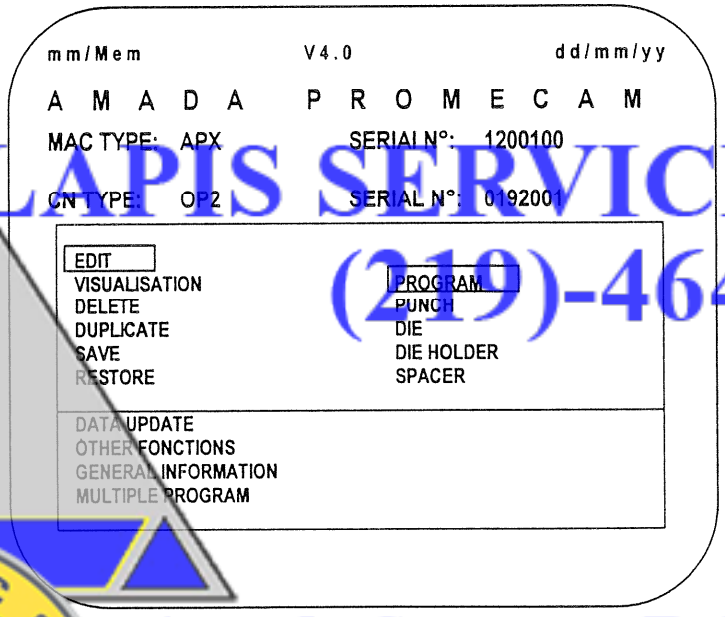

LAPIS SERVICES INC
(219)-464-9131
Amada Support, Rebuilds,
Sales and Fanuc Control Upgrade
AUTHORIZED CNC SYSTEM INTEGRATOR
FANUC

The N.C. first displays an intermediate page for work-piece details. It also enables you to search for an existing program from memory or enter a new number to make a new program.

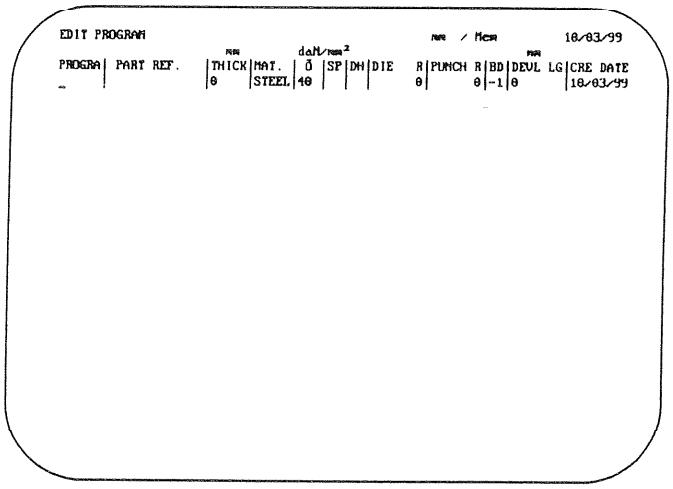

PROGRA: Program number (max.6 digits) if the entered program number is already assigned to an existing program in L-ALPHA mode, the N.C. will display its characteristics with a drawing of the work-piece.
But if the number is already assigned to MANUAL 1 or MANUAL 2 program, the N.C. will display the following message "PROGRAM INCOMPATIBLE WITH THIS MODE <RC> TO CONTINUE". If the program number is not used or free then N.C. will allow you to program a new work-piece.

PART REF: Enter your part reference (max.13 digits) if desired. This is an optional field.

THICK: Thickness of the material to be bent in mm.

MAT: Select the type of material you wish to fold using the cursor ↓ ↑ keys.
These keys also enable you to scroll through the most commonly used materials. When you have made your choice, confirm with the CR ← key.

LAPIS SERVICES INC
(219)-464-9131
AUTHORIZED CNC SYSTEM INTEGRATOR
FANUC
Amada Support, Rebuilds,
Sales and Fanuc Control Upgrade

Õ: Material's tensile strength in DaN / mm². This is pre-programmed value for most common materials and will automatically be fed in when a material type is selected but you can modify this if need be.

SP: Reference of the spacer. If you don't know this reference, then press the cursor [↓] key and NC will display all the spacers in the library. Select the spacer, which is mounted on your machine, or the one, which you intend to use, by using the cursor [↓] and [↑], then confirm your choice using the CR [←] key.

DH: Reference of the die holder to be used. Proceed in the same way as for the spacer to select the die holder.

DIE: Enter the reference of the die you will be using. If it is unknown, then use the [←] key to display the die library. The selection is made in the same way as before. If you have more than one page, then you can scroll through them using page keys.

R: DIE parameter (optional, used only for reverse mounted die).

0 = die not reversed
1 = die reversed

NOTE: This parameter should only be used with a two V or non-symmetrical dies. This will ensure the correct safety zone for "X" axis and also ensure correct NC calculation for the feasibility of the work-piece.

PUNCH: Enter the reference, if you know it, for punch being used. Otherwise, use the CR [←] key to display the punch library. The selection is made in the same way as for the dies.

LAPIS SERVICES INC
(219)-464-9131
AUTHORIZED CNC SYSTEM INTEGRATOR
FANUC
Amada Support, Rebuilds,
Sales and Fanuc Control Upgrade

R: PUNCH parameter (optional, used only when punch is reverse mounted).

0 = punch not reversed

1 = punch reversed

NOTE : This should be used when ever punch is reverse mounted so that the work-piece feasibility (production simulation) is correctly calculated.

After programming all the fields, you will obtain a page similar to the one shown below.

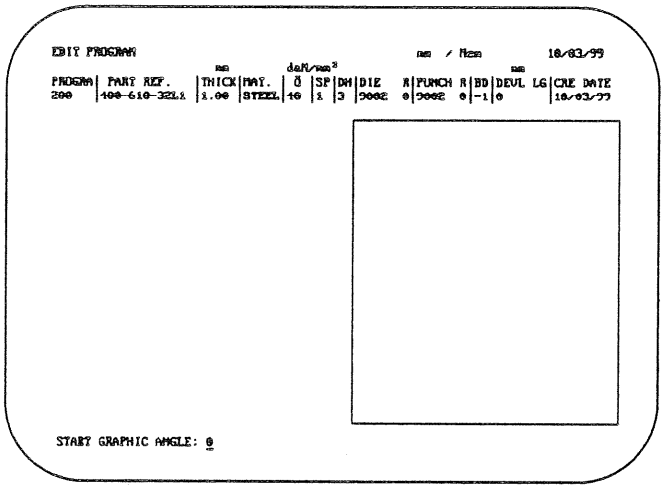

LAPIS SERVICES INC
(219)-464-9131
AUTHORIZED CNC SYSTEM INTEGRATOR
FANUC
Amada Support, Rebuilds,
Sales and Fanuc Control Upgrade

At this stage, the cursor is in the bottom left of the screen at the field "START GRAPHIC ANGLE = ". This will allow you to choose the orientation of the first segment in accordance with the trigonometric angular orientation as shown in the opposite sketch. Program the desired angle then confirm your choice using CR key.

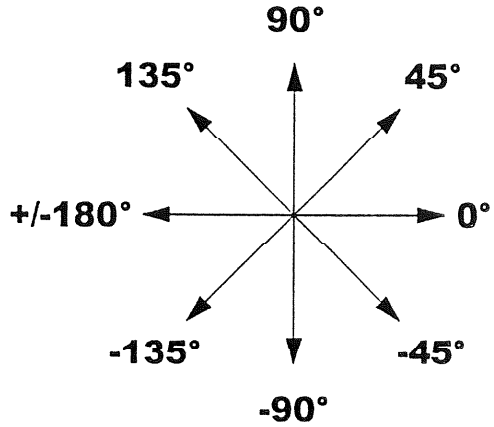

Every time you modify an existing program, it is possible to rotate your work-piece if you desired. After confirming the chosen direction. The screen display will switch to the one below.

By convention, a work-piece is always drawn from left to right. The different segments are identified in the following order: 1, 2, 3, … n. The different angles will be identified in the order 1, 2, 3, … n-1.

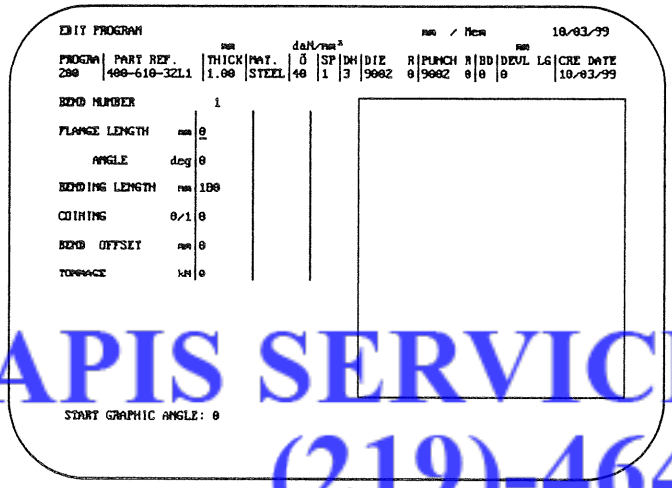

LAPIS SERVICES INC
(219)-464-9131

BEND NUMBER: Line identifying the different bends.

FLANGE LENGTH mm: Length of a work-piece segment (external dimension) in mm.

ANGLE deg: Angular value of the bend in degrees.

AUTHORIZED CNC SYSTEM INTEGRATOR
FANUC
Amada Support, Rebuilds,
Sales and Fanuc Control Upgrade

BENDING LENGTH mm: Length of the bend in a work-piece. This value is required by the NC to calculate the minimum force required for carrying out the bend.

COINING 0/1: Permits to select coining mode for a bend (identical to the COINING in MANUAL 2 mode).

BEND OFFSET mm: Distance the part is off-centred from machine's centre line. This is used when performing bends off centre (identical to PART D in the MANUAL mode 2).

The zero value of the "BEND OFFSET" corresponds to bending in the machine axis.

TONNAGE kN: Required bending force calculated by the NC.

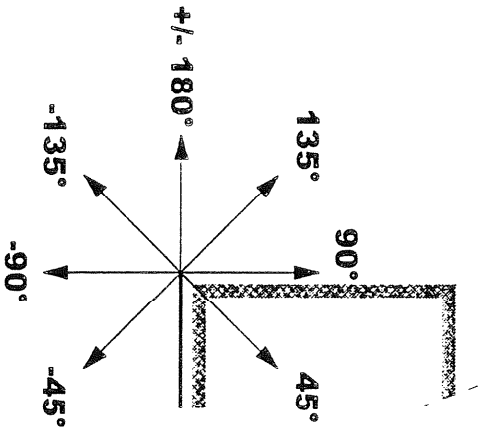

With the cursor located on the first line of the first column, enter the first flange length of the work-piece (as described at the beginning of this chapter) 10 mm.
The cursor will then moves to the title "ANGLE" field. To determine whether the angle is positive or negative, position at the edge, as shown in the opposite sketch: enter 90, then confirm.
Enter the width of the material to be bent then confirm.
The required bending force to bend this width will be automatically calculated and displayed by the NC in the field opposite to "FORCE".
Choose the bending mode you want to use, if you want to use coining mode then enter "1" in the field opposite to "COINING", otherwise leave it to "0" which is the default selection for air bending mode.
The zero value of the "BEND OFFSET" corresponds to bending in the machine axis.
If you are bending off centre, then enter this distance using positive or negative signs for the value (identical to PART D in the MANUAL mode 2). The NC will re-calculate the tonnage accordingly.

LAPIS SERVICES INC
(219) 464-9131
AUTHORIZED CNC SYSTEM INTEGRATOR
FANUC
Amada Support, Rebuilds,
Sales and Fanuc Control Upgrade

Your first bend is now programmed. To program the next one, press the cursor ➡ key, it will copy the parameters of the first bend i.e. "BENDING WIDTH", "COINING", "BEND OFFSET" and "TONNAGE". All you need to do now (in general) is to modify the flange length and the angle.
To know which direction applies to your angles (positive or negative), apply the same principle as before (see the sketch below).

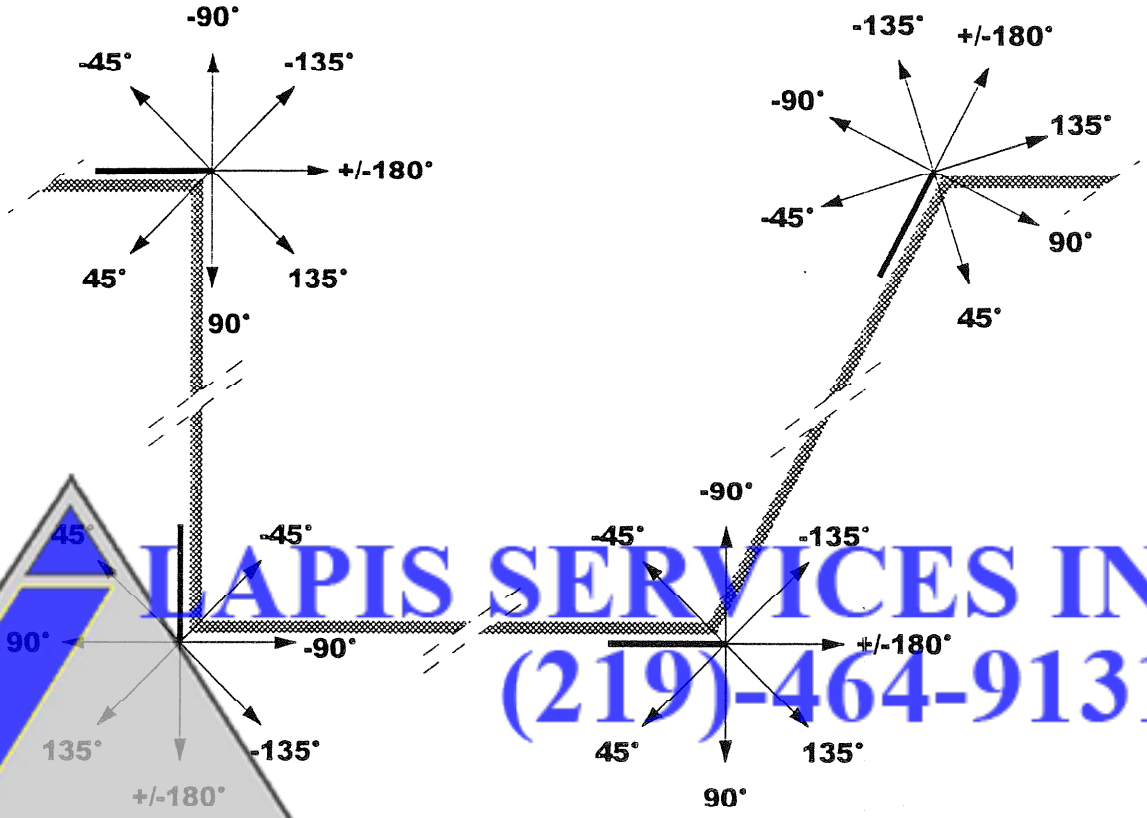

LAPIS SERVICES INC
(219)-464-9131
Amada Support, Rebuilds,
Sales and Fanuc Control Upgrade
AUTHORIZED CNC SYSTEM INTEGRATOR
FANUC

Program your work-piece through to the last segment. Remember that to go from one bend to another you must use the cursor [→] key. If you make a mistake on a bend, you can delete it using the delete [DEL] key with the cursor placed in the column of the bend to be deleted. If you forget a bend, the insert [INS] key will enable you to insert a bend at the point where the cursor is located. At the end of programming, you should have a page that looks like the one shown below.

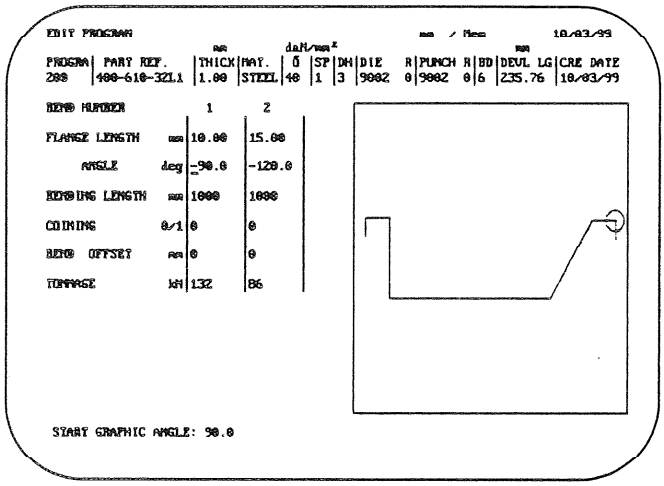

NOTES:

Once you have entered the flange length of the first segment, pressing the "END/FIN" key will record your program. This key enables you to stop programming mode at any time and come back to it later.

For each programmed segment, the developed length of the work-piece is re-calculated and displayed in the field "DEVL LG".

In case if the part is symmetrical, then you can only draw half of the part and the use mirror [MIR] key. The NC will ask you to input the angle of symmetry. Once you give this angle, the symmetry will be created according to this angle.

LAPIS SERVICES INC
(219)-464-9131
AUTHORIZED CNC SYSTEM INTEGRATOR
FANUC
Amada Support, Rebuilds,
Sales and Fanuc Control Upgrade

When you finished drawing your work-piece, press the graphic key. A new page will be displayed on the screen, showing your machine profile fitted with the selected tools, which you have chosen at the beginning of your programming.

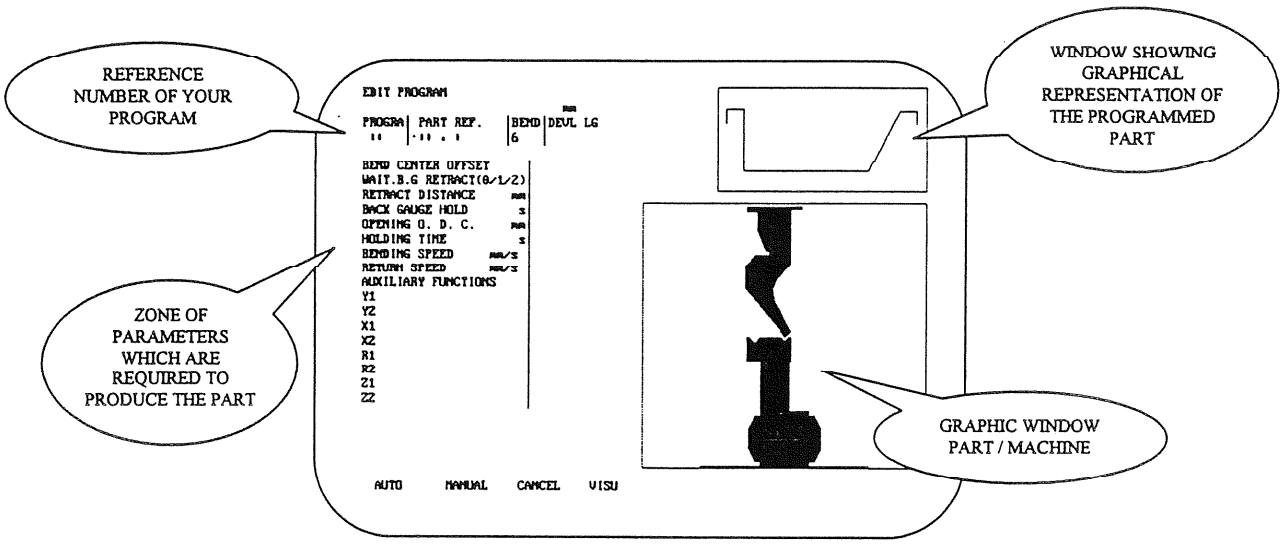

The plus and minus keys are active. They offer a "ZOOM" function, operable on the "GRAPHIC WINDOW PART / MACHINE" and enabling you to change the scale of the work piece display on the screen.

At the bottom, on left side of the graphic window, there are four selectable functions. You can select these using cursor or keys and then confirm with the CR key.

AUTO: Automatic calculation of the bending sequence with selected tooling.

MANUAL: Manual determination of bending sequence with selected tooling.

CANCEL: Permits to cancel a calculated bend sequence display on the screen.

VISU: Visualisation of calculated bending sequences, which are determined either using "AUTO" or "MANUAL" modes.

This page also displays the characteristics of your program, e.g.; (part reference number and it's developed length) along with "graphic window part / machine", reminding you of the part drawing.

LAPIS SERVICES INC
(219)-464-9131
Amada Support, Rebuilds,
Sales and Fanuc Control Upgrade
AUTHORIZED CNC SYSTEM INTEGRATOR
FANUC

To determine automatically the bending sequence, select "AUTO" from the bottom of the page then press CR key. The message ODC min: 1 / 0: will be displayed with a default value of 1.
With the default value is 1, NC will calculate the minimum opening required to extract the produced component (fig. 1).
If the part is to be removed flat to the die (fig. 2), then program 0.
Pressing CR key once again will start the calculation according to the parameters programmed on the "DATA UPDATE" page of the main menu.

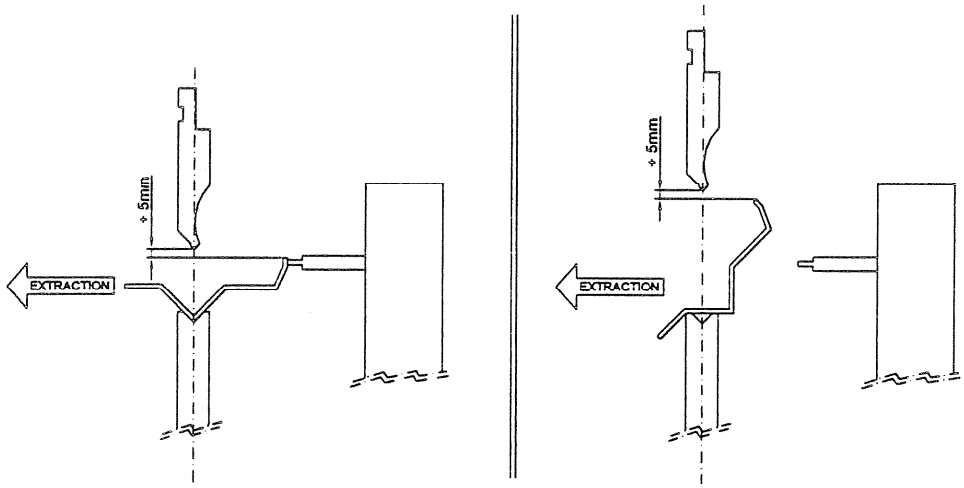

Fig:1 Fig:2

LAPIS SERVICES INC
(219)-464-9131

SIMULATION CRITERION AND AUTO

MAX INTERMEDIATE BEND BG: Maximum number of bends you authorise between the backgauge and bend to be made (99 max.).

TOLERANCE ON THE EDGE: Permissible angular tolerance on the bending flange at the edge (45° max.).

TOLERANCE AT 90: Permissible angular tolerance on the bending flange at 90° (45°max.).

FRONT EXTENDED RATIO: This is the front to back ratio from bend line to the edge of the material.

AUTHORIZED CNC SYSTEM INTEGRATOR FANUC
Amada Support, Rebuilds,
Sales and Fanuc Control Upgrade

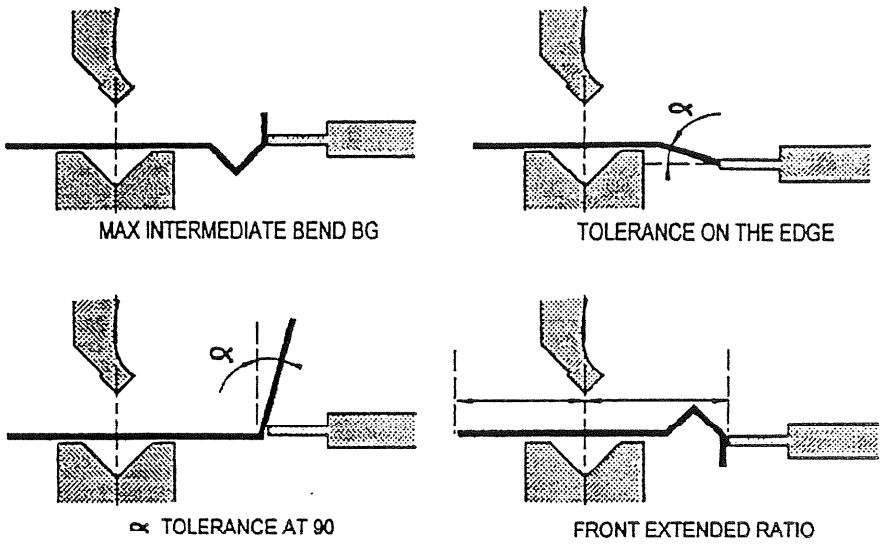

The above functions are described in details earlier, see data update.

LAPIS SERVICES INC
(219)-464-9131
Amada Support, Rebuilds,
Sales and Fanuc Control Upgrade
AUTHORIZED CNC SYSTEM INTEGRATOR
FANUC

At the end of the "AUTO" determination of the bend sequence, each angle of the work-piece profile inside the ''WINDOW SHOWING GRAPHICAL REPRESENTATION OF THE PROGRAMMED PART" will be circled. These circles indicate that a solution has been found for the programmed part and in the "GRAPHIC WINDOW PART / MACHINE ", your work-piece will be positioned on the tool for the execution of the first bend. This current bend will be identified in the 'WINDOW SHOWING GRAPHICAL REPRESENTATION OF THE PROGRAMMED PART'' by a red circle. The white circles represent the bending sequences yet to be accomplished.
Selecting the "VISU" function allows you to browse through the entire calculated bending sequence by using the right page key. When you reach the last bend, the left page key enables you to un-bend your work-piece.

NOTE: If bends are already done, they are not circled in the ''WINDOW SHOWING GRAPHICAL REPRESENTATION OF THE PROGRAMMED PART" during the bending sequence.

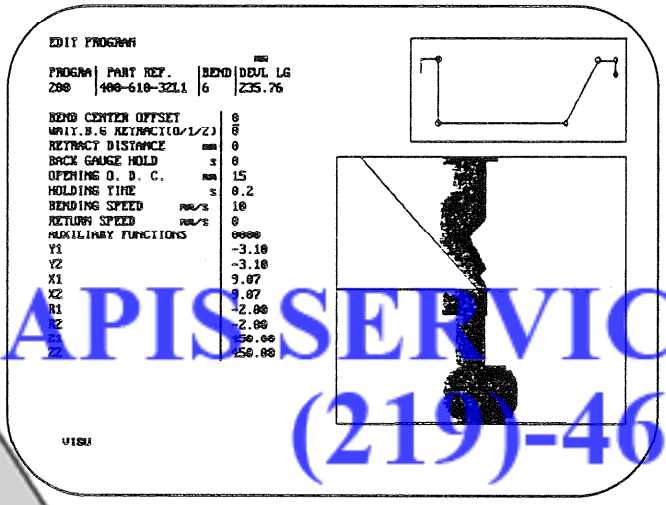

LAPIS SERVICES INC
(219)-464-9131

For each of the visualised bend sequence, the presence of the cursor will allow you to modify calculated values of the parameters for the displayed bend as well as the positions of axes Z1 and Z2 axes.

AUTHORIZED CNC SYSTEM INTEGRATOR FANUC
Amada Support, Rebuilds,
Sales and Fanuc Control Upgrade

To exit the "VISU" window, press "END/FIN" key, which will bring you back to the preceding page where you had four selectable functions.
If, you launch "AUTO" and there are no circles on the work-piece, in the ''WINDOW SHOWING GRAPHICAL REPRESENTATION OF THE PROGRAMMED PART" and the press brake is displayed opened without any worksheet. This means that the automatic bend sequence calculation failed. (This situation can be caused by divers reasons such as unsuitable tools selected for the job or the criterions for the bend simulation are too restricted or even contradictory).
To resolve the problem, check if the selected tools are suitable to carry out the job, they are correctly positioned and that the simulation criterions are correct.
Re-activate the "AUTO" search for bend sequence after correcting the above.

If still no solution is found, switch to "MANUAL" mode to visualise any eventual collisions. The order in which visualisation can be done will always be angle n° 1, angle n° 2 etc.

Use the page key to locate the last angle to be produced (this search can be made by unfolding the work-piece).

The "MIRROR" key will permit you to obtain a different gauging configuration by swapping your work-piece front to back.

The cursor & keys allows you to choose the gauging position of the backgauge finger when more than one bend exists between the bend in question and the backgauge.

After verifying the bend parameters (BEND OFFSET, BG WAIT, RETRACT DIST. ...AUX. FUNCTIONS), confirm your manually selected sequence using the graphic key.

Proceed in the same manner for the remaining bends. One thing you should bear in mind that to determine the bending sequence in "MANUAL", you should start from the last bend and work through to the first bend i.e. backward.

The other usage of the "MANUAL" mode consists of defining the last one or more bends the way you like to carry out then exiting the "MANUAL" function by pressing the "END/FIN" key. Then determining the remaining bend sequences using "AUTO" function.

LAPIS SERVICES INC
(219)464-9131
Amada Support, Rebuilds,
Sales and Fanuc Control Upgrade
AUTHORIZED CNC SYSTEM INTEGRATOR
FANUC

"CANCEL" is the last available function on this page. It enables the bend sequence to be deleted.

This bend sequence cancelling function allows you to redo the calculation in "AUTO" from the cancelled bend sequence or to determine a new bend sequence in "MANUAL" to change bending order, gauge position.
The bend sequence cancelling is done in the following order: bend n° 1 ; bend n° 2 ; … bend n° n.

EXAMPLE: If you wish to delete bend n° 3, you will be oblige to cancel bend n° 1 and bend n° 2 before you can cancel bend n° 3.

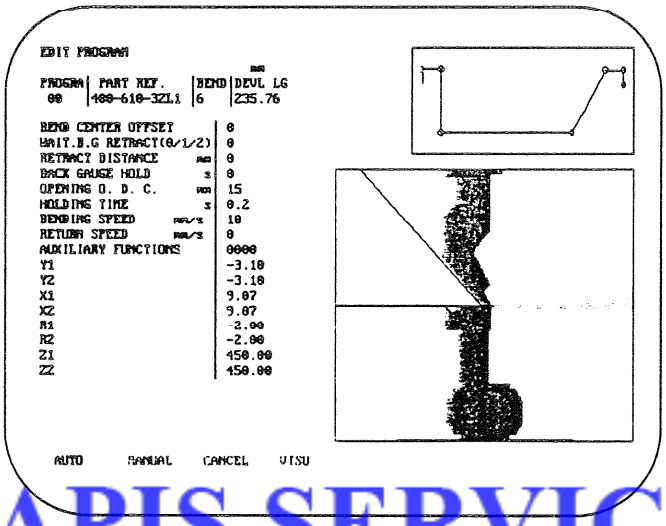

LAPIS SERVICES INC
(219) 461-9131

To exit "EDIT PROGRAM" mode, press "END/FIN" key, your program will be saved automatically if your bend sequence is complete, otherwise a series of messages will be given on screen to warn you that the order is not complete with a possibility to re-use your programmed drawing.

AUTHORIZED CNC SYSTEM INTEGRATOR
FANUC
Amada Support, Rebuilds,
Sales and Fanuc Control Upgrade

Selecting "VISUALISATION PROGRAM" will enable you to browse through the programs in the library and to determine the mode in which a program is created i.e.:

- MANUAL 1 <Simplified programming>,
- MANUAL 2 <Angle programming>,
- L-ALPHA <Graphical programming>
- Multiple part programs

Program created in MANUAL 1 <Simplified programming>: It displays neither the material thickness nor the tooling nor the developed length and has no drawing for the work-piece.

Program created in MANUAL 2 <Angle programming>: It does not display the developed length and has no drawing for the work-piece.

Program created in L-ALPHA: It displays all the characteristics of the work-piece and it's drawing in the lower part of the screen.

Multiple part program: It displays five stars ''*****'' in place of the material.

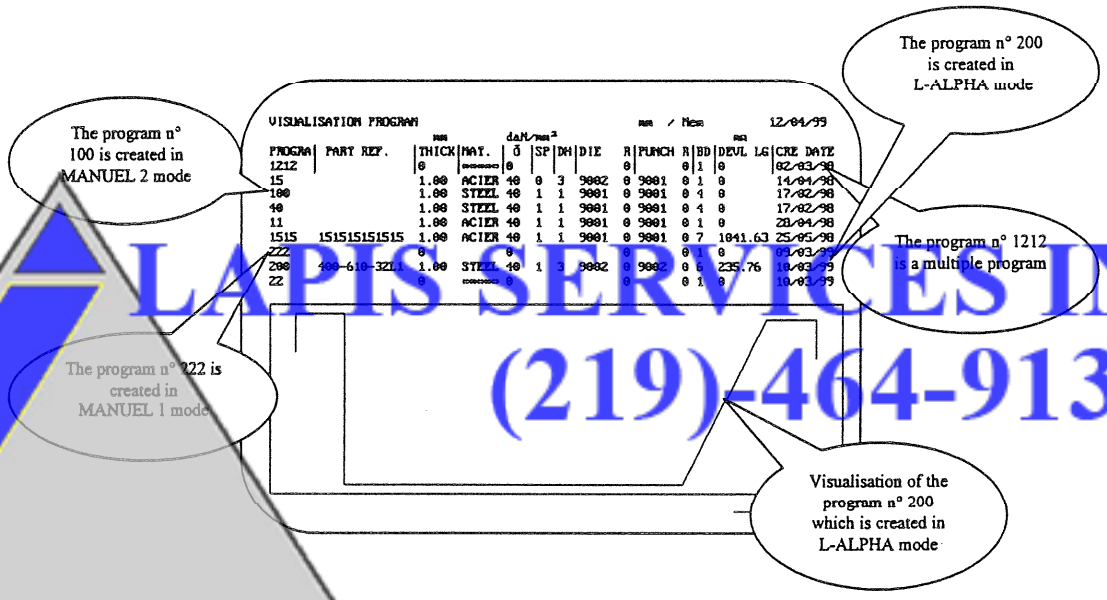

Access is gained to "SEMI-AUTOMATIC" mode via this key and "AUTOMATIC" mode via this key which are identical to those described in chapters 1.10 and 1.11.
It is also compulsory to initialise the machine, it should be carried out before accessing adjustment or execution modes.

LAPIS SERVICES INC
(219)-464-9131
Amada Support, Rebuilds,
Sales and Fanuc Control Upgrade
AUTHORIZED CNC SYSTEM INTEGRATOR FANUC

In the "AUTOMATIC" mode, two pages are available to assist you in job production.

1) "AUTOMATIC" page, with the visualisation of the axes positions, similar to "MANUAL" mode.

- Press key from the main menu.
- The intermediate automatic page appears, confirm the current program or select a new program number.
- The following "AUTOMATIC" page will be displayed on the screen.

AUTOMATIC mm/Mem dd/mm/yy

PROG N° :	100	DRAW N° :	460-410-321.1
SEQ N° :	1 / 1	PART QTE :	0 / 1
S.PROG N°	:2	DRAW N° :	460-410-321.1
SEQ N° :	1 / 4	REQUIRED QTY	: 300
ANGLE :	90.0	FINISHED QTY	: 0
CY :	1	THICKNESS	: 1.0

AXES	PROG POS.	ACTUAL POS.
Y	-4,82	55.99
X1	8.91	609.99
X2	8.91	609.99
R1	0.10	70.00
R2	0.10	70.00
Z1	450.00	899.99
Z2	450.00	899.99

LAPIS SERVICES INC
(219)-464-9131

- Press START key to position the backgauge and then produce your work piece.
- Pressing STOP key will interrupt the execution of the current program and then "END/FIN" key will return directly to the main menu after saving the program and among others data storing the part counters.

AUTHORIZED CNC SYSTEM INTEGRATOR FANUC
Amada Support, Rebuilds,
Sales and Fanuc Control Upgrade

2) "GRAPHIC" page: The procedure of displaying the graphical execution page is identical to the one described above, with the exception that you will have to press the key. After which the following graphical page will be displayed on the screen. Press the START key and NC will display graphically each bend during execution of the part.
It is possible to return back to numerical display at any time. To do so, you need to press the STOP key then key.

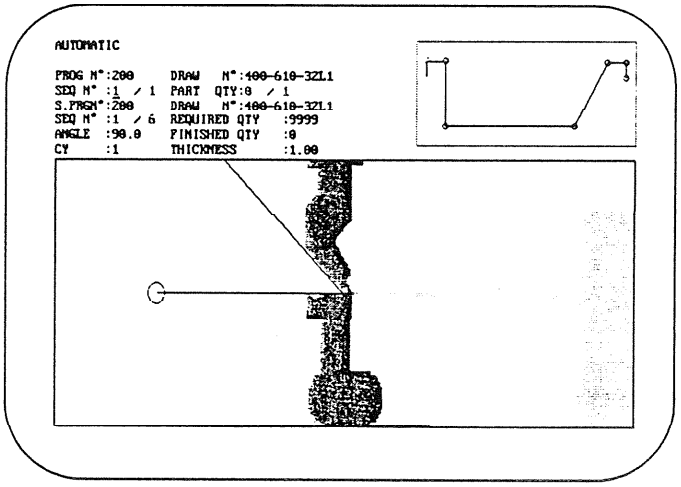

LAPIS SERVICES INC
(219)-464-9131
AUTHORIZED CNC SYSTEM INTEGRATOR
FANUC
Amada Support, Rebuilds,
Sales and Fanuc Control Upgrade

1.21. MULTIPLE PROGRAM

DEFINITION

A multiple part program is composed of several programs. It is possible to compose a multiple program by mixing different types (XY, X∝, L∝). Furthermore, in a multiple part program, you can find more than one program of the same types e.g. two XY type programs, three X∝ type programs or two-L∝ type programs. This means you got whole range of possibilities to mix different types of programs to achieve desired multiple programs.

The only restriction is that a multiple program can not contain another multiple program.

The maximum permissible number of multiple programs NC can have is 15.

When you execute a multiple part program, in reality, you will execute one by one (in the order you build up your multiple part program) all individual programs of which it is composed.

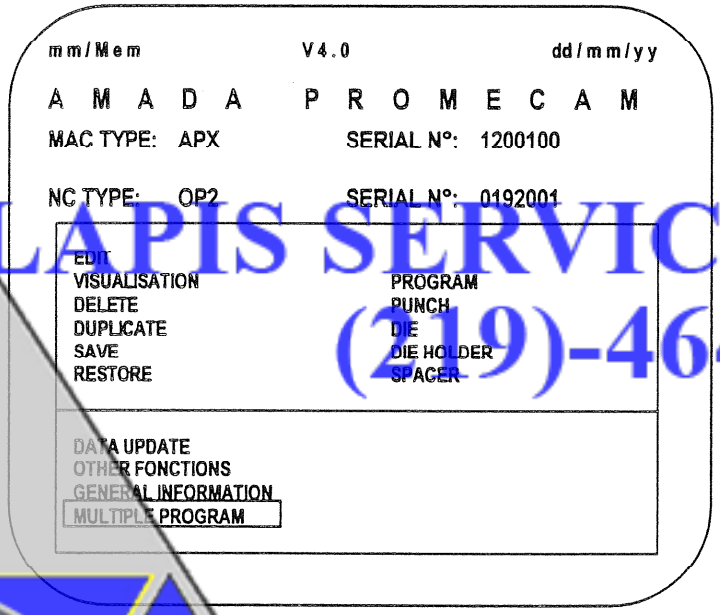

LAPIS SERVICES INC
(219)-464-9131
Amada Support, Rebuilds,
Sales and Fanuc Control Upgrade
AUTHORIZED CNC SYSTEM INTEGRATOR
FANUC

CREATION

"MULTIPLE PROGRAM" is a new choice on the main menu. This permits to create a program by selecting different programs as its contents. This is the only way to create a multiple part program.

Selecting this displays a screen similar to the one used for creating a standard program except that the material will be replaced with 5 stars.

Enter the multiple part program number and its reference (multiple part program reference is an optional field so you can fill it if desired) and confirm by pressing either cursor ⬇ or CR ⟵ key, this will display list of all programs in the NC library. Using any of the four ⬅ ➡ ⬇ ⬆ cursors you can browse around and by select the desired program pressing CR ⟵ key when the cursor is underneath a given program number. The selected program will then be turned in reverse video and another table composed of 2 columns will be generated with selected programs beneath the NC library (as shown below). Proceed with the composition, if an erroneous selection is made, you can delete it by reselecting the same program (this is valid only when it is the last selected program). If the erroneous selection is made few steps ahead, then by reselection, you will re-introduce the same program in your list. In this case, you will have to erase all the programs in between before you can rectify your error. When done press ''END / FIN'' key enables modification of the quantities to be produce. Pressing once again will display a message ''END CONFIRM (1=Yes / 0=No) with a default value of 0. If you confirm with ''1'', program will be saved and NC will return to main menu, if not program will not be saved but NC will still return to main menu.

In the table of selected programs, you will find following information. Order number in which program will be executed or selected (order determination is purely manual), Program number which you have selected from the library, Its reference number if any and the Quantity a particular program should be produced.

LAPISSERVICES INC
(219)-464-9131

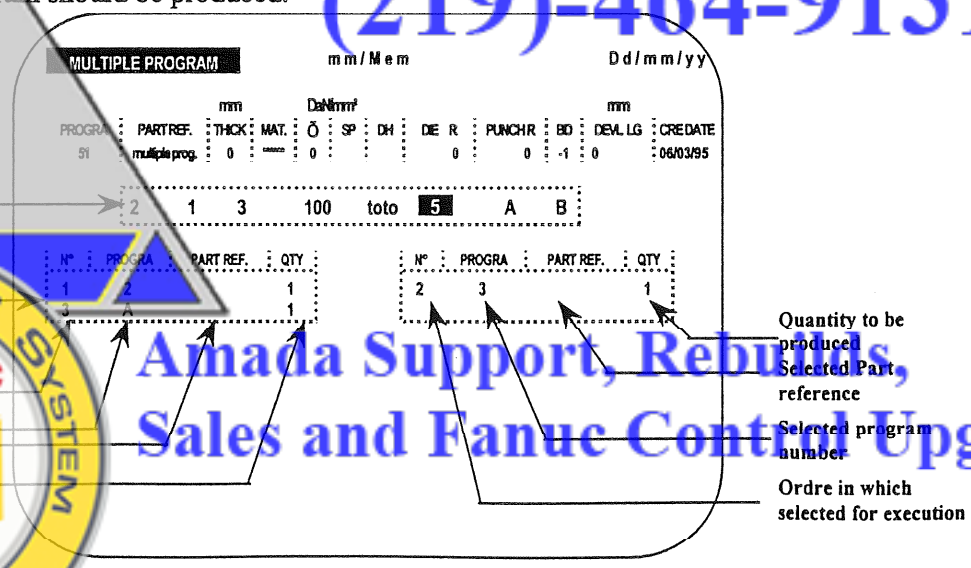

AUTHORIZED CNC SYSTEM INTEGRATOR
FANUC
Amada Support, Rebuilds, Sales and Fanuc Control Upgrade

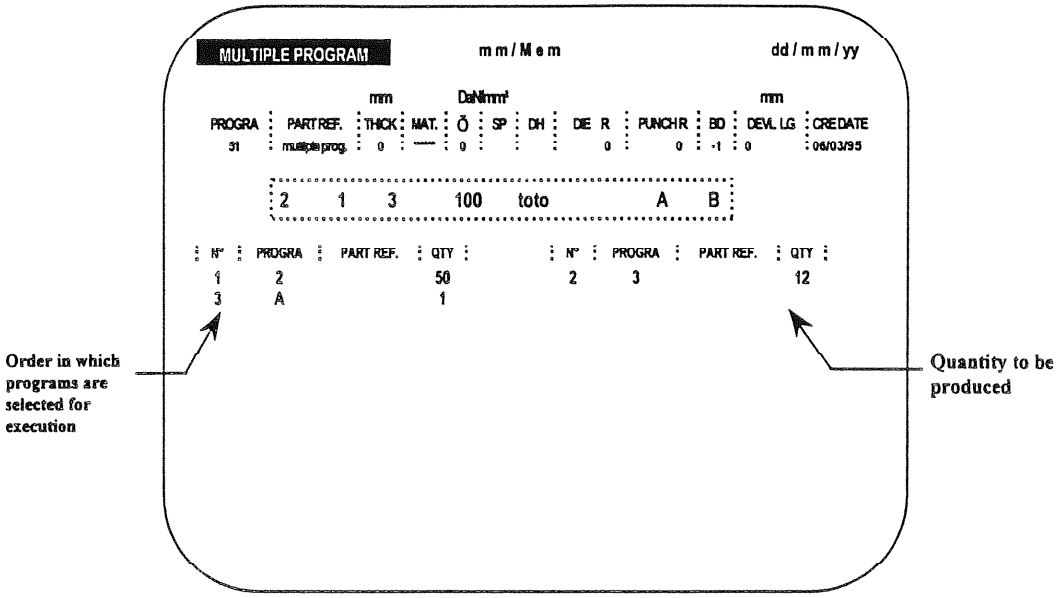

If selected program name is ''MULT'' then it is an existing multiple program, in which case NC will display the following message "MULTIPLE PROGRAM <RC> TO CONTINUE'' and will not allow it's selection as this can not be part of another multiple part program. To continue, you will be obliged to press CR ⟵ key.

LAPIS SERVICES INC
(219)-464-9131
AUTHORIZED CNC SYSTEM INTEGRATOR
FANUC
Amada Support, Rebuilds,
Sales and Fanuc Control Upgrade

DELETING A MULTIPLE PART PROGRAM

See “DELETE” on page 59/102.

VISUALISATION OF A MULTIPLE PART PROGRAM

When a multiple part program is visualised, the NC will displays the list of programs which are contained in it, see the screen below.
Deleting or visualisation of a multiple part program functions uses the same screens which are used for dealing any other program.

```
VISUALISATION PROGRAM                                  MM  / Mem        13/04/99

    PROGRA: MULT        PART REF.:                          CREATION 19/02/98

    D.LENGTH:0          MAM.TIME:0                          BEND NB.: 0

PROGRA| PART REF.   |THICK|MAT. |DH|SP|PUNCH R|DIE   R| QTY
1010   xaxa         2.00  ACIER 0  1  8816  0 8805  0  1
POIL   xaxa         2.00  ACIER 0  1  8816  0 8805  0  1
TOTO   yufgutrut    1.00  STEEL 1  1  9002  0 9003  0  1
ZS                  1.00  STEEL 0  2  9002  0 9002  0  1
```

LAPIS SERVICES INC
(219)-464-9131
AUTHORIZED CNC SYSTEM FANUC INTEGRATOR
Amada Support, Rebuilds,
Sales and Fanuc Control Upgrade

1.22. ERROR MESSAGES

On screen displayed messages
(Following listed messages may change depending on the software versions).

- "RESET THE MACHINE"
  Resetting can be carried out by turning the pump / motor reset key switch which is located on the electric cabinet door.
  Reset is completed when green indicator light comes on.

- " B.G. INCOHERENCE AND SAFETY"
  This message appears when one axis value (X1 – X2) ≥ is greater than the maximum permissible value.

- "DIE INCOHERENCE AND CONFIRM THICKNESS(1 = Y / 0 = N)"
  The opening of the selected die is either too narrow or too large in respect to the material thickness programmed for bending; however you may override the warning by entering "1".

- "PUNCH/DIE CONFIRM INCOHERENCE (1 = Y / 0 = N)"
  The punch angle is different to the die's ; however you may override the warning by entering "1".

- "PROGRAM INCOMPATIBLE WITH THIS MODE"
  The selected program number has already been used in another operating mode.

- "BEND ANGLE INFERIOR TO TOOL ANGLE"
  The programmed angle is less than the punch angle.

- " MAXIMUM NUMBER OF BENDS REACHED"
  You can not program any more bends as you are exceeding maximum number which is 25 bends.

- "UNKNOWN PROGRAM"
  The requested program does not exist in the NC / Floppy disk memory.

- "UNKNOWN PUNCH"
  Punch does not exist in the corresponding library.

- "UNKNOWN TOOL"
  Die holder or spacer does not exist in the corresponding libraries.

LAPIS SERVICES INC
(219)-464-9131
AUTHORIZED CNC SYSTEM INTEGRATOR
FANUC
Amada Support, Rebuilds,
Sales and Fanuc Control Upgrade

- "EXISTING TOOL: REPLACE (1 = Y / 0 = N)"
  Tool already existing in the library.

- "OFF LIMIT VALUE"
  Value programmed exceeds axes limits.

- "UNKNOWN DIE"
  Die does not exist in the library.

- "SATURATED CATALOGUE"
  Maximum number achieved.

- "UNKNOWN PROG CATALOGUE"
  Specified program directory does not exist.

- "UNKNOWN PUNCH CATALOGUE"
  Specified punch directory does not exist.

- "UNKNOWN DIE CATALOGUE"
  Specified die directory does not exist.

- "EMPTY CATALOGUE"
  Directory empty

- "UNKNOWN SHIM CATALOGUE"
  Specified shim directory does not exist.

- "UNKNOWN DIE BLOCK CATALOGUE"
  Specified die block directory does not exist.

- "UNKNOWN MACHINE PARAMETER"
  Specified machine parameter does not exist.

- "ERROR ON BENDING FILE"
  Can not read a bending program.

- "GIVE CLOSING ORDER"
  Press closing foot pedal.

- "NO BEND IN THE PROGRAM"
  Program stored with out any data.

- "PRESS OPENING FOOTSWITCH"
  Press opening foot pedal

LAPIS SERVICES INC
(219)-464-9131
AUTHORIZED CNC SYSTEM INTEGRATOR FANUC
Amada Support, Rebuilds,
Sales and Fanuc Control Upgrade

- "BENDING ORDER ERROR"
  NC not getting closing signal for bending.

- "POSITIONING BENDING NUMBER ERROR"
  NC can not position axes on a given bend.

- "PROGRAM IMPOSSIBLE WITH THIS MODE"
  Operating mode mismatch for a given program.

- "MAX AXES CLEARANCE OVER"
  Axis position out side the tolerance.

- "EMITTING ERROR"
  Program transfer from NC to PC failed.

- "RECEIVING ERROR"
  Program transfer from PC to NC failed.

- "PROHIBITED FUNCT. RESET MACHINE"
  Can not use this function and machine should be reset.

- "PROHIBITED FUNCT. STANDARD TOOL"
  Can not edit tool, as it's an Amada standard tool.

- "PROHIBITED FUNCT."
  Function not allowed.

- "PROHIBITED FUNCT. TOOL USED"
  Can not delete tool as it's used in a program. Should delete the program first.

- "OFF LIMIT FORCE"
  Force exceeding machine total tonnage.

- "UNKNOWN CATALOGUE?»
  Specified library does not exists.

- "EXISTING PROGRAM"
  Can not use this program number as program already exists.

- " B.G. POSITIONING WAIT"
  Waiting for backgauge to position after dwell time.

- " MAX AXES DELTA OVER"
  Exceeding maximum permissible offset value for the axes.

- "CRITICAL MIN. EDGE"
  Minimum flange length for a given die reached.

LAPIS SERVICES INC
(219)-464-9131
AUTHORIZED CNC SYSTEM INTEGRATOR FANUC
Amada Support, Rebuilds,
Sales and Fanuc Control Upgrade

1.23. PROCEDURE TO MODIFY AXES ORIGIN POINT

- Select with the help of a cursor, "DATA MODIFICATION" in the main menu.
- Confirm your choice using CR ⟵ key.
- Scroll down the cursor on the desired axis origin value you want to modify.
- Enter the new value and then confirm using CR ⟵ key.
- Quit "Data Modification" menu by pressing ''END/FIN'' key.

NOTE

Only modify reference values if, the displayed value is different to obtained value (in which case the value will always remain **constant**).
Example: When displayed X1 axis value is = 50 mm and in reality the actual position of the X1 axis is 50.2 mm, then we have got an error of 0.2 mm on X1 axis.
To rectify this error, scroll the cursor down to X1 origin point and enter the new value which will be :
New reference value of X1 axis = old reference value of X1 axis + 0.2 mm.

LAPIS SERVICES INC
(219)-464-9131
AUTHORIZED CNC SYSTEM INTEGRATOR FANUC
Amada Support, Rebuilds,
Sales and Fanuc Control Upgrade

LAPIS SERVICES INC
(219)-464-9131

Amada Support, Rebuilds,
Sales and Fanuc Control Upgrade

AUTHORIZED CNC SYSTEM
FANUC
INTEGRATOR

ALPHANUMERIC INPUT ON NC

On machines equipped with a new keyboard, i.e. machines build in November 1993 and after.

Following data fields can take alphanumeric characters:

- Program number
- Work-piece reference number (on OPERATOR 1)
- Die holder
- Spacer
- Punch
- Die
- Reference numbers for special Punches or Dies when created.
- Directories on selected drives.

OPERATOR 2

NOTE

In programs numbers following characters ␣, +, -, * and / are prohibited.

If a data which does not correspond to above listed (for instance: material thickness) then it should not be entered alphanumerically, as this value will not be accepted by the NC. The cursor will be stuck in this field until a coherent value is entered.

Alphabetic characters may be entered together with the numeric (for numeric use the key board) for instance a job reference: ABC/123.

LAPIS SERVICES INC
(219)-464-9131

INPUT PROCEDURE

Select the field (for instance: job's reference number).

Pressing blank ␣ key then plus [+] key will activate alphanumeric mode, this you will see by a blinking letter A displayed on the screen. You can release both keys at this stage.

Down cursor [↓] key will scroll through the following characters, A, B,…X, Y, Z, 1, 2, 3, 4, 5, 6, 7, 8, 9, 0, +, -, *, /, ␣ (␣ = space). Up cursor [↑] key will allow scrolling the characters in the opposite direction.

Amada Support, Rebuilds,
Sales and Fanuc Control Upgrade

Releasing the up cursor [↑] or down cursor [↓] keys on a desired character will stop the characters from scrolling and the said character (blinking) will stay on the screen.

Confirm your choice by pressing CR key; the cursor will then moves to next field and will prompts once again with the blinking A, etc.

Once you entered the last character, you can revert back to normal input condition by depressing once more blank key then plus key.

You can finish off the reference number using numerical keypad if required and then confirm the whole thing using CR key.

The cursor will then move to the next in line field.

LAPIS SERVICES INC
(219)-464-9131
Amada Support, Rebuilds,
Sales and Fanuc Control Upgrade

APPENDIX C7

BACK GAUGE
HYDRAULIC PRESS BRAKE

HF 700 TYPE

FINGER HOLDING SYSTEM 160

LAPIS SERVICES INC
(219)-464-9131

CE

TECHNICAL MANUAL

X 40831

Amada Support, Rebuilds,
Sales and Fanuc Control Upgrade

BP 40040 – 95912 Roissy aéroport CDG cedex – Tél. : 01 49 90 30 00 – Fax : 01 49 90 31 99

LAPIS SERVICES INC
(219)-464-9131

AUTHORIZED CNC SYSTEM
FANUC
INTEGRATOR

Amada Support, Rebuilds,
Sales and Fanuc Control Upgrade

CONTENTS

1. OVERVIEW 5
1.1. DESCRIPTION 5
1.2. CHARACTERISTIcS. 6
1.3. DESCRIPTION OF AXES X1 AND X2 8
1.4. DESCRIPTION OF AXES R1 AND R2 10
1.5. DESCRIPTION OF AXES Z1 AND Z2 12

LAPIS SERVICES INC
(219)-464-9131
AUTHORIZED CNC SYSTEM INTEGRATOR
FANUC
Amada Support, Rebuilds,
Sales and Fanuc Control Upgrade

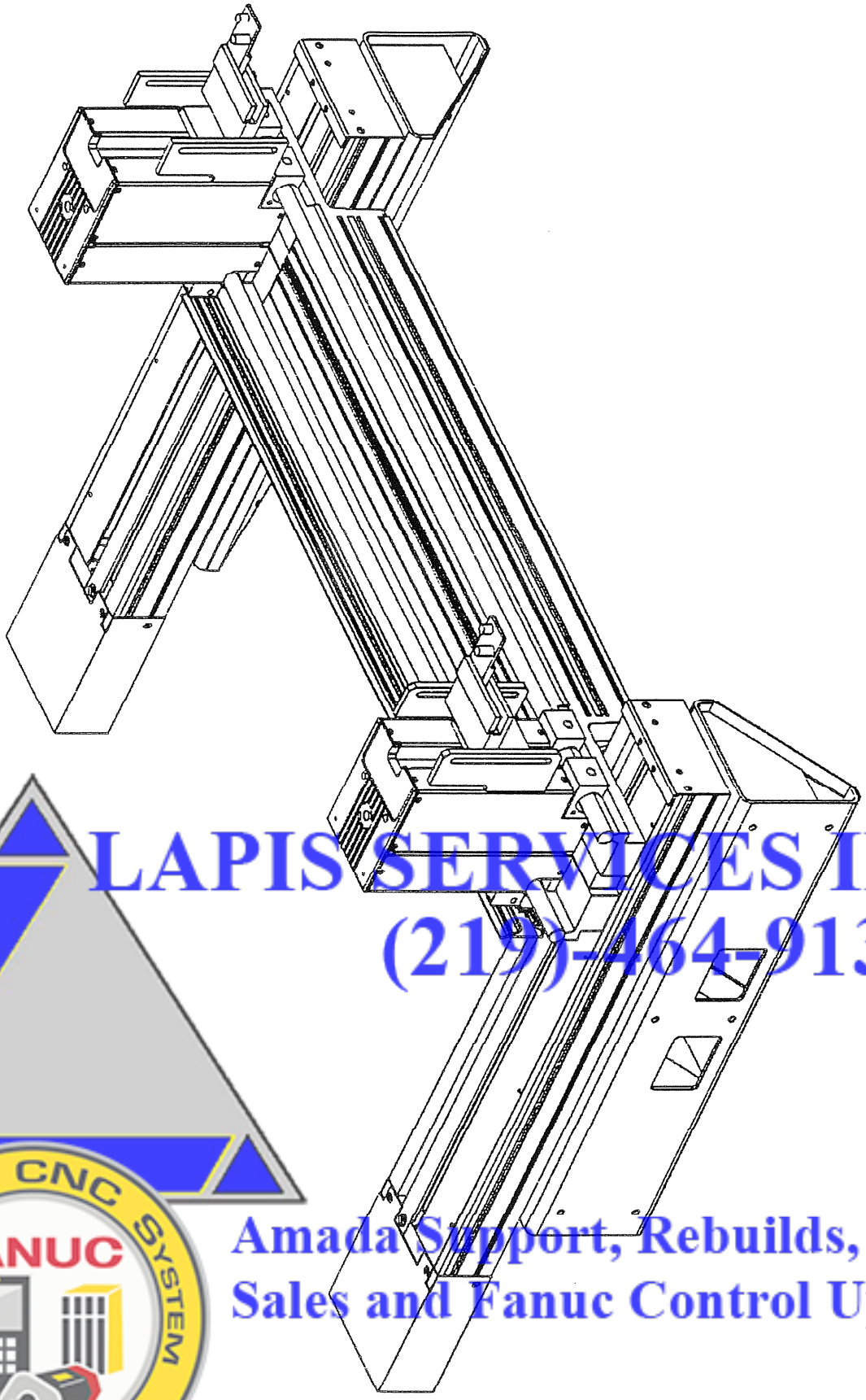

LAPIS SERVICES INC
(219)-464-9131
Amada Support, Rebuilds,
Sales and Fanuc Control Upgrade
AUTHORIZED CNC SYSTEM INTEGRATOR
FANUC

1. OVERVIEW

1.1. DESCRIPTION

The HF 700 type back gauge is a valuable complement to your numerical control. It is a necessary tool for multi-stations (dissymetry of "Z" axes). Combining speed and positionning precision, the HF 700 back gauge will meet your needs when producing average or large series parts, as well as when producing individual parts.

Depending on the back gauge type fitted to your machine, several configurations are possible (see below).

1) HF700 Type with standard fingers (HFB range 50 T to 220 T see Appendix C1).
2) TF 800 Type (HFB range 320 T to 630 T see Appendix C2).
3) B Type (HFB range 50 T to 220 T see Appendix C6).
4) Type HF700 with flat fingers (HFB range 50 T to 220 T see Appendix C7).

LAPIS SERVICES INC
(219)-464-9131
AUTHORIZED CNC SYSTEM FANUC INTEGRATOR
Amada Support, Rebuilds,
Sales and Fanuc Control Upgrade

1.2. CHARACTERISTICS.

	X1, X2	R1, R2	Z1, Z2
Range (mm)	700	150	3300 ou 2140
Max. difference between X1 and X2 (mm) For HFB 2 meters long For HFB 2,5 meters long For HFB 3 meters long For HFB 4 meters long For HFB 4,5 meters long For HFB 6 meters long	 500 500 500 500 500 500		
Travel speed (mm/s)	350	160	850
Motors power (watt)	200	110	110
Positionning precision (mm)	± 0,05	± 0,1	± 1
Max. distance between fingers (mm)			180
Max. distance between fingers (mm) For HFB 2 meters long For HFB 2,5 meters long For HFB 3 meters long For HFB 4 meters long For HFB 4,5 meters long For HFB 6 meters long			 3470 3840 4920

Each "back gauge finger system" supports, in the standard version, carries a flat finger with two displacable lugs which can be positioned according to your needs (see picture).

The R1 and R2 axes sliding blocks are designed so that more sophisticated fingers may be adapted. Consult your local agent for any installation differing from the standard.

Lugs

LAPIS SERVICES INC
(219)-464-9131
AUTHORIZED CNC SYSTEM INTEGRATOR
FANUC
Amada Support, Rebuilds,
Sales and Fanuc Control Upgrade

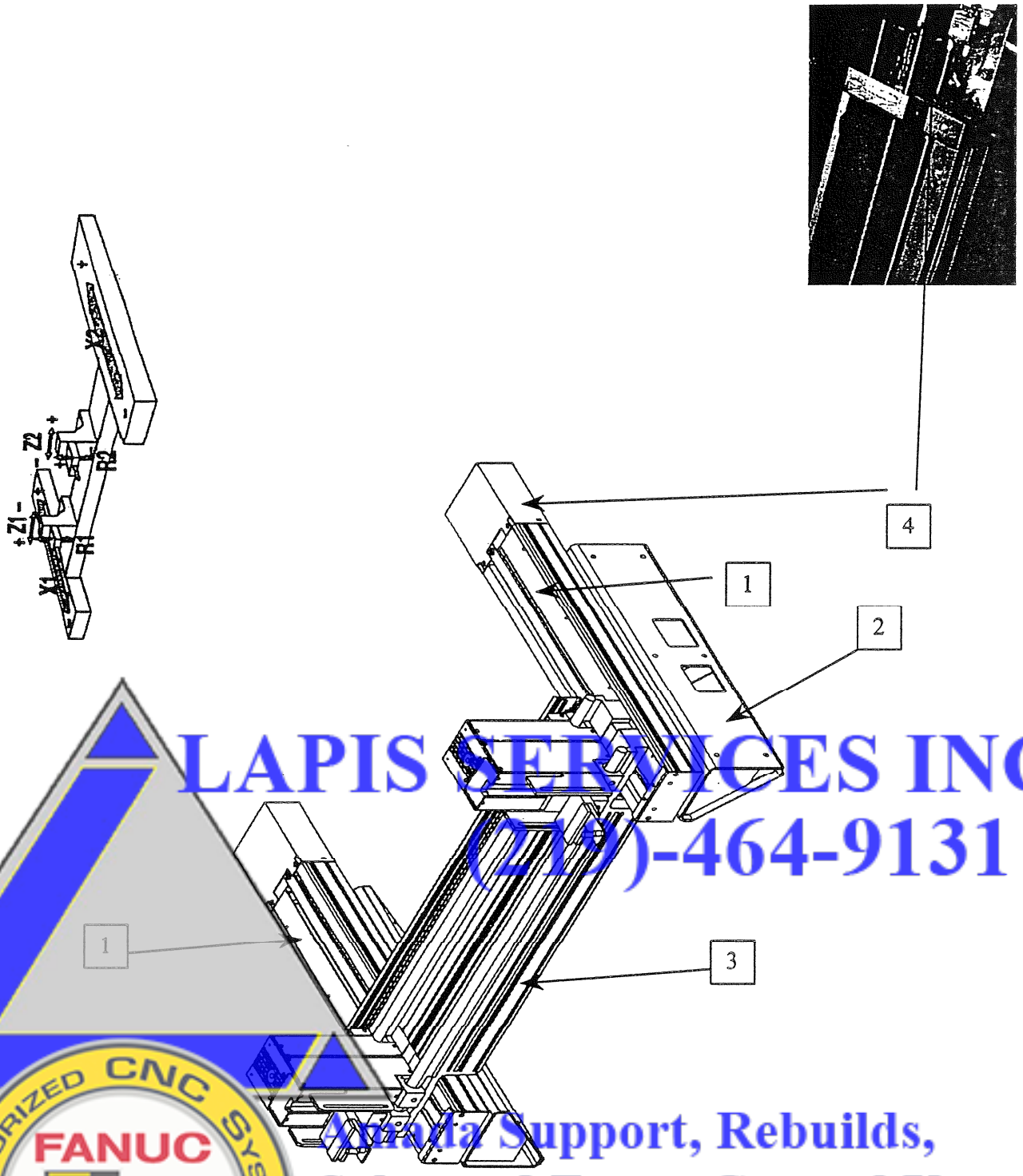

LAPIS SERVICES INC
(213)-464-9131
Amada Support, Rebuilds,
Sales and Fanuc Control Upgrade
AUTHORIZED CNC SYSTEM INTEGRATOR
FANUC

1.3. DESCRIPTION OF AXES X1 AND X2

ARM SUPPORTS :

- The arm supports (1) are made of an aluminium alloy profile with superior mechanical characteristics. They are attached to the left side of axis X1 and to the right side of axis X2. A right angle bracket made of very thick folded sheet metal is used for this attachment (2). Three screws connect each arm to its support and allow for precise leveling of the assembly.

- Each arm supports the guiding device and the translation device.

GUIDING DEVICE :

- Guiding is ensured by a column-ball sleeve assembly. The GS cast iron sliding bearing which supports the sleeves is self-aligning. It is also comprised of a plate upon which one of the ends of crossbeam Z rests (3).

- Bearing X1 carries the reference axis of crossbeam Z. Whereas bearing X2 carries the sliding stop which allows for staggering between X2 and X1.

TRANSLATION DEVICE :

- The translation of each of the bearing X1 and X2 is done by the motor-ball screw-nut connection to the sliding plate assembly (4).

- The motor is a DC type.

- The motor-ball screw connection is ensured by a "two part" coupling.

Furthermore, this device can compensate for the variations in positionning inherent in ball screws.

LAPIS SERVICES INC
(219)-464-9131
AUTHORIZED CNC SYSTEM INTEGRATOR FANUC
Amada Support, Rebuilds,
Sales and Fanuc Control Upgrade

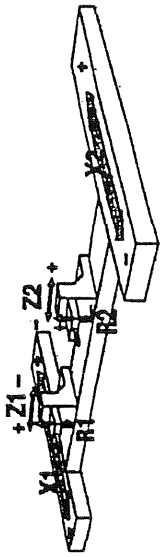

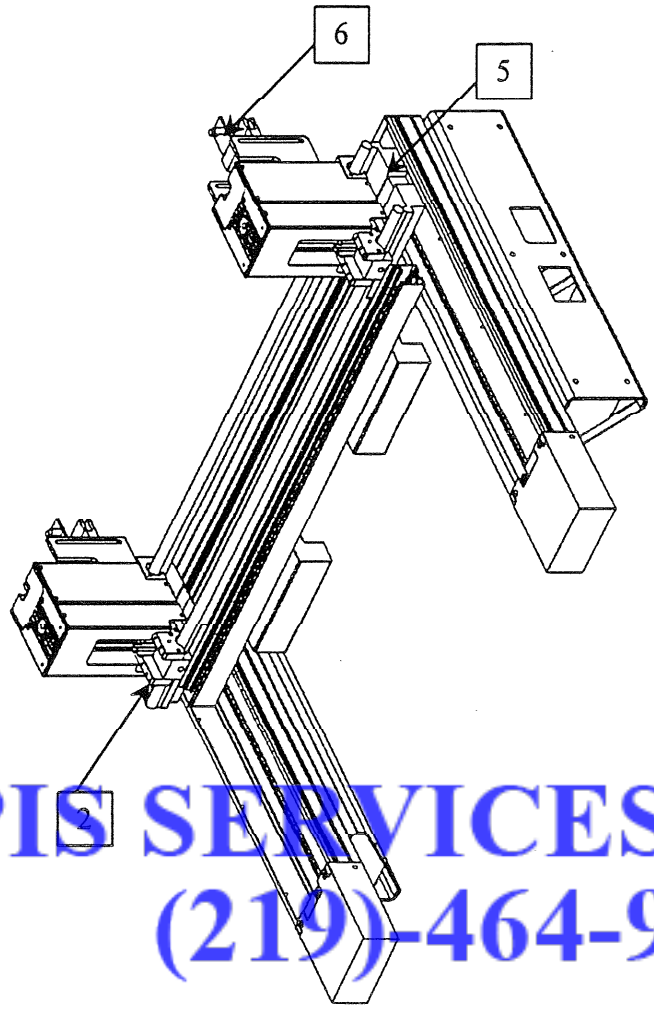

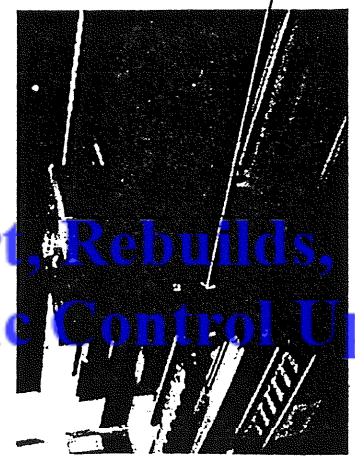

LAPIS SERVICES INC
(219)-464-9131
Amada Support, Rebuilds,
Sales and Fanuc Control Upgrade
AUTHORIZED CNC SYSTEM INTEGRATOR
FANUC

1.4. DESCRIPTION OF AXES R1 AND R2

- Each of the "back gauge finger system" units (1) is comprised of a moulded aluminium alloy plate (2) which supports the horizontal guiding elements (on the crossbeam) and a vertical guiding elements (axis R sliding block) (3), as well as the axis motor unit (4). The assembly is protected by the two part cowling which allows for easy access to the mechanical parts.

HORIZONTAL GUIDING DEVICE

- This is the guiding device which allow the "back gauge system" to move on crossbeam Z (5). The device used is a shaft-ball sleeve type. One sleeve is placed at the front of each carriage and one is place at the rear. The latter is implanted in an adjustable plate which allows for perpendicularity of R movement with respect to the working plane.

AXIS R SLIDING BLOCK

- This sliding block is used to support the gauge finger (6) and to ensure perfect positionning when R moves. A moulded aluminium alloy part in which four ball sleeves are implanted. The fingers support device attached to the front of this part is maintained and prestressed by a series of spring washers. A screw allows for the fine adjustment of the mechanical zero of the fingers.

MOTORIZATION

- The translation of each of the sliding blocks R1 and R2 is ensured by the motor-ball screw assembly.
- The motor (4) is a Direct Current type (DC type).

LAPIS SERVICES INC
(219)-464-9131
AUTHORIZED CNC SYSTEM FANUC INTEGRATOR
Amada Support, Rebuilds,
Sales and Fanuc Control Upgrade

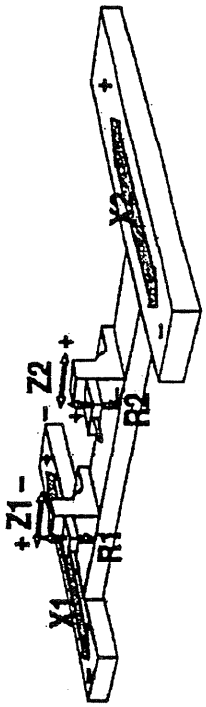

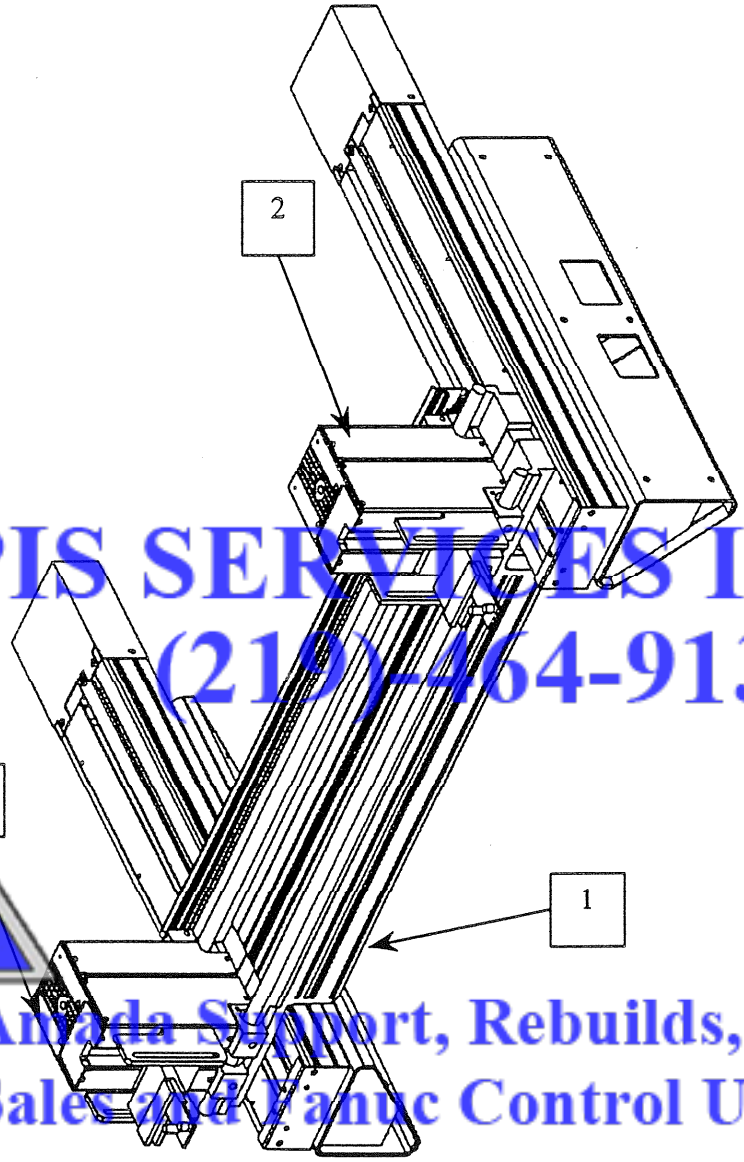

LAPIS SERVICES INC
(219)-464-9131
Amada Support, Rebuilds,
Sales and Fanuc Control Upgrade
AUTHORIZED CNC SYSTEM
FANUC
INTEGRATOR

1.5. DESCRIPTION OF AXES Z1 AND Z2

THE CROSSBEAM

- The crossbeam (1) is comprised of an aluminium alloy profile. A high resistance sheet metal plate rests on each end of this profile, one on the axis X1 plate, the other on the axis X2 plate. This crossbeam supports the guiding columns of axes R1 and R2 (2).

MOTORIZATION

- The horizontal translation of each of the towers R1 and R2 is ensured by a motor-gear ratio stage-translation belt assembly.

- The motor is a DC type.

- The reduction allows for optimal motor rotation speed and high production level for the assembly.

- Each "back gauge finger system" is connected to either the Z1 or Z2 motor unit by a notched belt. A mechanical device maintains the tension of the belt. This device is installed on the base of each "back gauge system".

The crossbeam end plates support the shafts and return pulleys of translation belts Z1 and Z2.

These same plates are connected to X1 and X2 by an axis in X1 and by a sliding stop in X2.

LAPIS SERVICES INC
(219)-464-9131
AUTHORIZED CNC SYSTEM INTEGRATOR
FANUC
Amada Support, Rebuilds,
Sales and Fanuc Control Upgrade

LAPIS SERVICES INC
(219)-464-9131

AUTHORIZED CNC SYSTEM
FANUC
INTEGRATOR

Amada Support, Rebuilds,
Sales and Fanuc Control Upgrade

LAPIS SERVICES INC
(219)-464-9131

AUTHORIZED CNC SYSTEM
FANUC
INTEGRATOR

Amada Support, Rebuilds,
Sales and Fanuc Control Upgrade